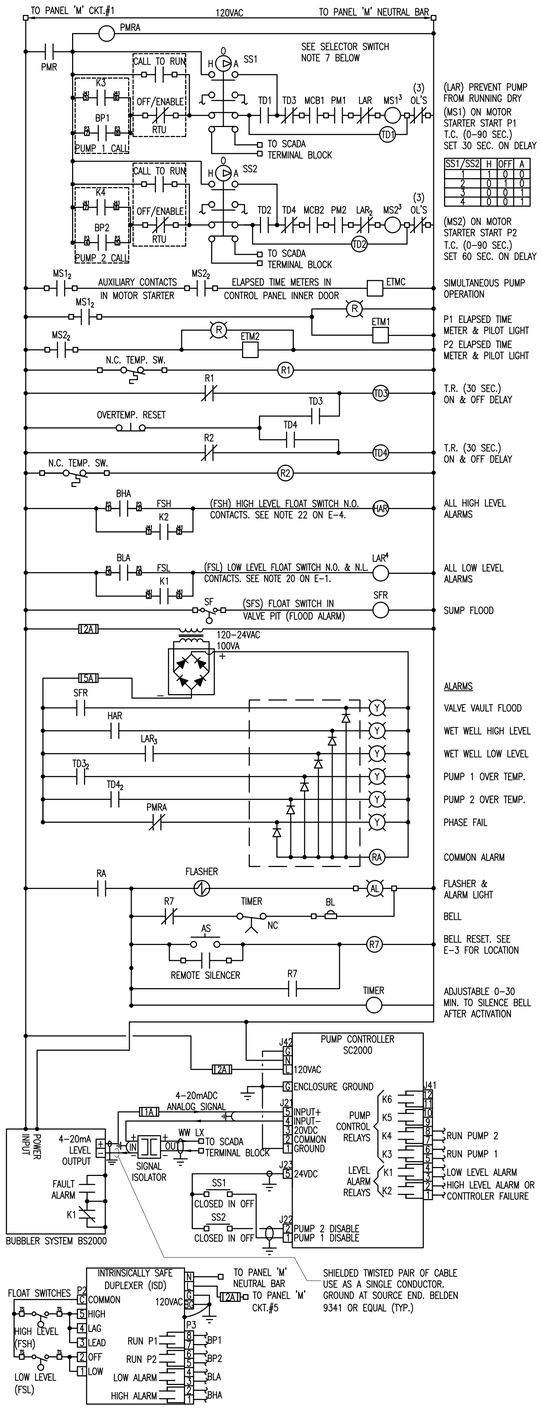

CONTROL PANEL NOTES:

1- USE SHIELDED WIRE FOR ALL DISCRETE INPUT WIRING. GROUND SHIELD AT SOURCE END.
2- BACKUP FLOAT SWITCHES SHOULD BE PLACED ABOVE AND BELOW NORMAL CONTROL RANGE OF SC2000.
3- TO PROTECT AGAINST TRANSIENTS CONNECT ALL GROUND CONDUCTORS TOGETHER AND RUN ONE WIRE TO CONTROL PANEL 'M' GROUND BAR.
4- MAXIMUM DISTANCE BETWEEN ISD AND FLOAT SWITCHES IS 1000 FEET.
5- SIGNAL ISOLATOR VOLTAGE DROP AT INPUT TERMINALS SHALL NOT BE HIGHER THAN 5.5VDC. ISOLATOR BY PHOENIX CONTACT OR APPROVED EQUAL.
6- PROVIDE A POWERED SIGNAL ISOLATOR IN CASE RTU ASSEMBLY IS FAR FROM CONTROL PANEL.
7- PROVIDE EXTRA SET OF AUX. DRY CONTACTS ON H-O-A SWITCHES TO ACKNOWLEDGE SCADA WHEN IN AUTO POSITION.
8- SUPERSCRIPT INDICATES NUMBER OF NORMALLY OPEN AND NORMALLY CLOSE POLES WHEN DIFFERENT FROM 2.
9- SUBSCRIPT IDENTIFY POLE CONTACT NUMBER WHEN GREATER THAN 1.
10- FOR MORE INFORMATION CONSULT MPE-SC2000, MPE-BS2000 & MPE-ISD PRODUCT MANUAL.

CONTROL WIRING DIAGRAM

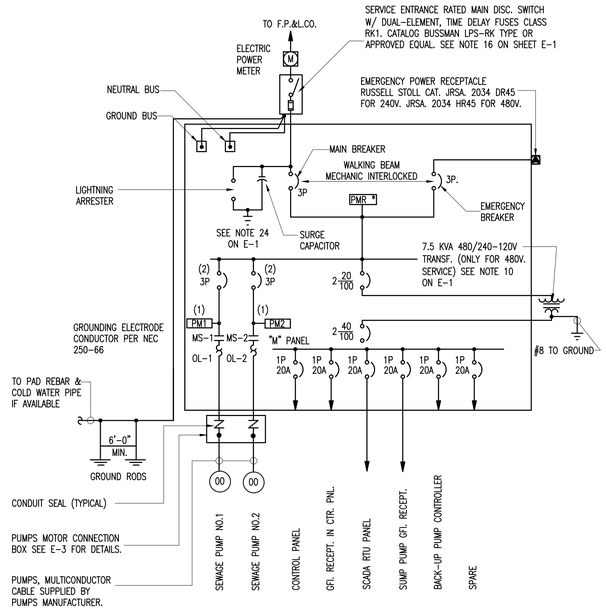

(1) THREE PHASE VOLTAGE MONITORS. INSTALL 2 AMPS. FAST ACTING FUSES IN SERIES WITH EACH OF THE INPUTS.
(2) PROVIDE MOTOR CIRCUIT BREAKERS WITH (MCB) AUXILIARY CONTACTS

ONE LINE DIAGRAM

N.T.S.

ALL OVERCURRENT PROTERCTION DEVICES SHALL BE RATED FOR THE AVAILABLE FAULT CURRENT

AVAILABLE 3-PHASE FAULT CURRENT AT THE TRANSFORMER SECONDARY TERMINALS IS ESTIMATED TO BE _____ RMS SYMMETRICAL AMPS AND DOES NOT INCLUDE: CONSIDERATION FOR ANY MOTOR CONTRIBUTION AND/OR FAULT CURRENT ASYMMETRY

MISCELLANEOUS LOAD PANEL 'M'

CKT.	DESCRIPTION	VA LOAD
1	CONTROLS	400
2	RECEPTACLE	360
3	SACADA RTU PANEL	750
4	SUMP PUMP	1200
5	BACK UP P'CONTROLLER	180
6	SPARE	
7		
	CONNECTED VA	2950

LOAD CALCULATION

2-. 00 H.P. SEWAGE PUMPS ___00___ AMPS.
MISCELLANEOUS BASE LOAD ___00___ AMPS.
25% OF LARGEST MOTOR ___00___ AMPS.
TOTAL ___00___ AMPS.
PROVIDE SERVICE SIZE: ___00___

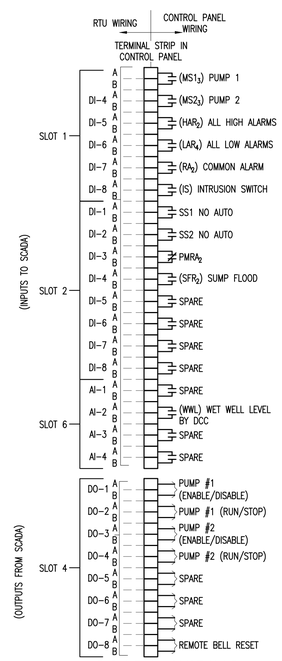

SCADA WIRING

N.T.S.

NOTES:

1-. — — CONNECTED BY MD-WASD FROM CONTROL PANEL TO SCADA PANEL.
2-. PROVIDE AT LEAST 5 SPARE CONTACTS.
3-. SLOT 1 SHALL BE WIRED WITH #14 THHN STR. BLUE AND LABELED ACCORDING TO DRAWING.
4-. SLOT 2 SHALL BE WIRED WITH #14 THHN STR. BLACK AND LABELED ACCORDING TO DRAWING.
5-. 4-20 MA SIGNAL CABLE SHALL BE BELDEN 9341 TWISTED PAIR OR EQUAL AND BE LABELED ACCORDING TO DRAWING.
6-. SLOT 4 SHALL BE WIRED WITH #14 THHN STR. RED AND LABELED ACCORDING TO DRAWING.

UNLESS DIRECTED BY MD-WASD, DESIGN USING STANDARDS ON SHEET E-2 AND E-3

THESE ARE NOT CONSTRUCTION DRAWINGS. THE INFORMATION HEREIN CONTAINED SHALL ONLY BE USED AS GENERAL GUIDELINE OF THE INTENDED OPERATION AND FUNCTIONS AND SHALL NOT BE CONSTRUED AS ALL INCLUSIVE. ENGINEERS OF RECORD AND CONSULTANTS USING THESE GUIDELINES SHALL VERIFY AND MODIFY ANY REQUIREMENT NOT NECESSARILY SHOWN AS MAY BE REQUIRED BY ANY AND ALL APPLICABLE CODES AND STANDARDS.

FLOOR PLAN:
SHOW/STATE ALL ELECTRICAL EQUIPMENT AND APPURTENANCES IN COMPLIANCE WITH NEC. 110-16.
PROVIDE CIRCUIT NUMBERS AS RELATING TO PANEL SCHEDULE. CONDUCTORS AND CONDUIT SIZE.
SPECIFY HAZARDOUS LOCATIONS.

SITE PLAN:
ALSO, PROVIDE A SITE PLAN, SCALE: 1"=10'-0", IF THERE IS ANY IN THE SET OF DRAWINGS, PROVIDING LOCATIONS OF BUILDINGS, STRUCTURES, PUMP STATION, POWER SERVICE POINT OR TRANSFORMER LOCATION, SERVICE COMPONENTS AND CONDUCTORS.

ELECTRICAL SITE PLAN

SCALE: 1"=10'

BREAKERS, WIRING AND CONDUIT SCHEDULE

VOLTS & PHASE	MOTOR HP	MOTOR AMP CODE	START SIZE	MOTOR CIRCUIT PROTECT. AMPS	MOTOR WIRE THWN CU. NOTE 13 ON E-5	SIZED FOR TWO PUMP STATIONS: MAIN & STAND-BY BREAKERS	SERVICE: GROUNDING	SERVICE: POWER
240-1ϕ	5	28	2	60	3#8 IN 1 1/2"	100	#6	3#2, IN 1-1/2"C
240-1ϕ	7.5	40	2	80	2#6 & 1#8G. IN 1-1/2"	150	#6	3#1/0, IN 2"C
240-3ϕ	5	15.2	1	30	4#10 IN 1 1/2'	100	#6	4#2, IN 1-1/2"C
240-3ϕ	7.5	22	2	50	4#8 IN 1 1/2"	100	#6	4#2, IN 1-1/2"C
240-3ϕ	10	28	2	50	3#6 & 1#8G. IN 1-1/2"	100	#6	4#2, IN 1-1/2"C
240-3ϕ	15	42	3	100	3#4 & 1#8G. IN 2"	150	#6	4#1/0, IN 2"C
480-3ϕ	5	7.6	1	15	4#12 IN 1 1/2"	70	#6	4#3, IN 1-1/2"C
480-3ϕ	7.5	11	1	30	4#12 IN 1 1/2"	70	#6	4#3, IN 1-1/2"C
480-3ϕ	10	14	2	30	4#10 IN 1 1/2"	70	#6	4#3, IN 1-1/2"C
480-3ϕ	15	21	2	50	4#10 IN 1 1/2"	70	#6	4#3, IN 1-1/2"C
480-3ϕ	20	27	2	50	4#8 IN 2"	125	#6	4#1, IN 2"C
480-3ϕ	25	34	3	50	3#6 & 1#8G. IN 2"	150	#6	4#1/0, IN 2"C
480-3ϕ	30	40	3	100	3#6 & 1#8G. IN 2"	200	#4	4#3/0, IN 2"C
480-3ϕ	40	52	3	100	3#4 & 1#6G. IN 2"	200	#4	4#3/0, IN 2"C
480-3ϕ	50	65	4	100	3#3 & 1#6(G) IN 2"	200	#4	4#3/0, IN 2"C
480-3ϕ	60	77	4	150	3#2 & 1#6(G) IN 2"	225	#2	4#4/0, IN 2 1/2"C

SCOPE OF WORK

DESCRIBE ELECTRICAL WORK

1-. START TO FINISH
2-. TEMPORARY SERVICE
3-. DEMOLITION AND CLEAN-UP.
4-. THE INFORMATION PROVIDED IN THESE PLANS IS TO ASSIST THE CONTRACTOR IN ASSESSING THE NATURE AND EXTENT OF THE CONDITIONS WHICH MAY BE ENCOUNTERED DURING THE COURSE OF THE WORK. ALL CONTRACTORS ARE DIRECTED, PRIOR TO BIDDING, TO CONDUCT ANY INVESTIGATIONS THEY DEEM NECESSARY TO ARRIVE AT THEIR OWN CONCLUSIONS REGARDING THE ACTUAL CONDITIONS THAT WILL BE ENCOUNTERED.
5-. CONTRACTOR SHALL PERFORM ALL WORK WITHIN MDWASD PROPERTY AND EASEMENT, AND SHALL NOT DISTURB ADJACENT PRIVATE PROPERTY.
6-. THE CONTRACTOR SHALL NOTIFY THE ENGINEER IMMEDIATELY WHEN CONFLICTS BETWEEN DRAWINGS AND ACTUAL CONDITIONS ARE DISCOVERED.
7-. THE CONTRACTOR SHALL MAINTAIN A SET OF PLANS WITH CURRENT FIELD CHANGES MARKED THEREON AND SHALL DELIVER THESE PLANS TO THE ENGINEER UPON COMPLETION OF CONSTRUCTION. PROVIDE COMPLETE AS-BUILT DATA AT THE PROJECT'S COMPLETION.

MIAMI-DADE COUNTY
Delivering Excellence Every Day

WATER AND SEWER DEPARTMENT
ENGINEERING DIVISION
3071 SW 38TH AVENUE
MIAMI, FLORIDA 33146-2221
305-665 7471
miamidade.gov

PUMP STATION No. 0000
FACILITY OFFICIAL ADDRESS, FLORIDA 33100-0000
TYPICAL SUBMERSIBLE SEWAGE PUMP STATION (WASD DESIGN STANDARD UPDATE 2012)
ELECTRICAL SITE PLAN
POWER/CONTROL (BUBBLER) AND WIRING SCHEDULE

DRAWING HISTORY

RELEASED FOR	DATE	BY
REVIEW 30%		
REVIEW 70%		
REVIEW 100%		
PERMIT		

REVISIONS

No.	DESCRIPTION	DATE	BY

APPROVALS

CHIEF ENGINEER:
SECTION HEAD:
PROJECT MGR.:
DESIGNED: X.X.X. CHECKED: X.X.X.
DRAWN: X.X.X. FINAL CHECK: X.X.X.

XXXXXXX XXXXX
XXXXXXXXXX Engineer
State of Florida - License No. 00000
Date:_____

ER No. : S000000 PCTS No. : 00000
FILE NAME: 00000E02.DWG
DATE: APR. 06, 2012 SCALE: AS NOTED
SHEET E-2A
DWG. No. S-00000-A