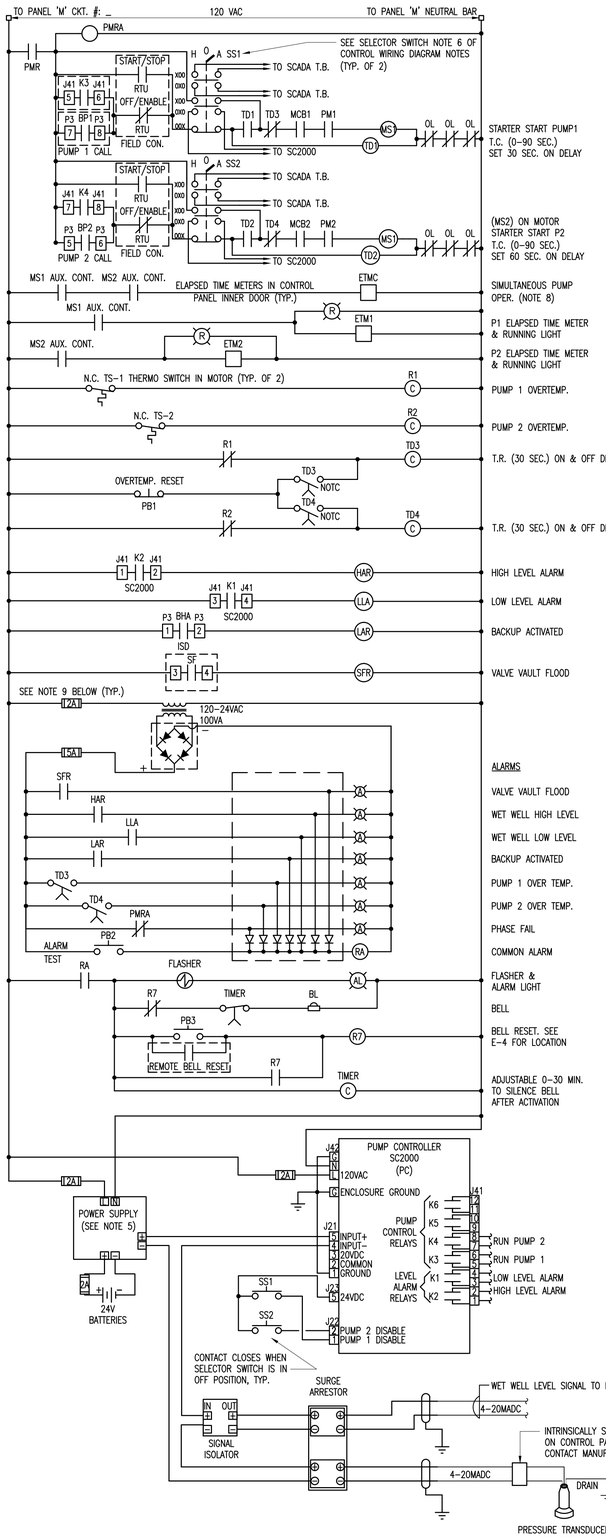

CONTROL WIRING DIAGRAM

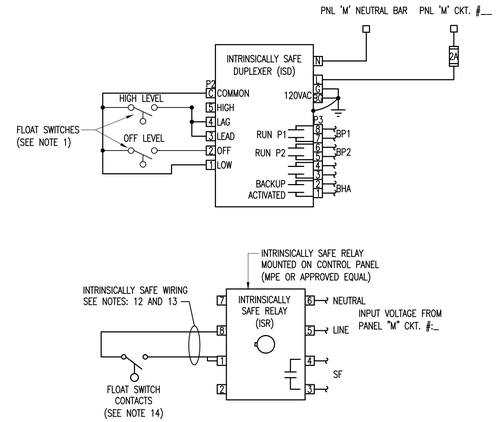

CONTROL WIRING DIAGRAM NOTES:

1- BACKUP FLOAT SWITCHES SHOULD BE PLACED ABOVE NORMAL CONTROL RANGE OF THE PRESSURE TRANSDUCER. MAXIMUM DISTANCE BETWEEN INTRINSICALLY SAFE DUPLEXER ISD AND FLOAT SWITCHES IS 1000 FEET. FLOAT SWITCHES PROVIDED BY PANEL MANUFACTURER.
2- TO PROTECT AGAINST TRANSIENTS CONNECT ALL GROUND CONDUCTORS TOGETHER AND RUN ONE WIRE TO CONTROL PANEL "M" GROUND BAR.
3- PRESSURE TRANSDUCER MODEL NUMBER: SLX 130-MIS-10-##-B BY CONTEGRA OR APPROVED EQUAL. PRESSURE TRANSDUCER TO BE PROVIDED BY PANEL MANUFACTURER. SEE PRESSURE TRANSDUCER MODEL NUMBER EXAMPLE (ORDER INFORMATION) ON THIS SHEET.
4- SIGNAL ISOLATOR VOLTAGE DROP AT INPUT TERMINALS SHALL NOT BE HIGHER THAN 5.5 VDC. ISOLATOR BY PHOENIX CONTACT OR APPROVED EQUAL.
5- POWER SUPPLY WITH BATTERY CHARGER ASTRODYNE MODEL AD55-B/DRL OR APPROVED EQUAL. LOCATE AWAY FROM HEAT SOURCES AND PANEL WALLS. PROPOSED POWER SUPPLY INRUSH CURRENT WHEN COLD IS 20 A SELECTED PROTECTIVE FUSE SHALL WITHSTAND SUCH CURRENT. PROVIDE 7 A/h MINIMUM BATTERY CAPACITY.
6- ON H- O- A SWITCHES PROVIDE SUFFICIENT NUMBER OF CONTACT BLOCKS WIRED TO THE SCADA TERMINAL BLOCK AND TO PUMP CONTROLLER SC2000 AS SHOWN.
7- PROVIDE A MINIMUM OF 3 N.O. AUXILIARY CONTACT ON MOTOR STARTER OR DUPLICATE CONTACT USING RELAYS.
8- PROVIDE FUSES WITH RATED FUSE HOLDERS (TYPICAL).
9- USE SHIELDED WIRE FOR ALL ANALOG INPUT WIRING. GROUND SHIELD AT SOURCE END.
10- FOR MORE INFORMATION CONSULT MPE-SC2000, CONTEGRA SLX AND ISD PRODUCT MANUAL.
11- ALL INTRINSICALLY SAFE WIRING SHALL BE SEPARATED FROM NON-INTRINSICALLY SAFE WIRING. REFER TO ARTICLE 504 OF THE NATIONAL ELECTRIC CODE (ANSF/NFPA 70) FOR INSTALLATION OF INTRINSICALLY SAFE WIRING.
12- MAXIMUM DISTANCE BETWEEN UNIT AND SWITCH CONTACTS IS 1000 FEET.
13- SWITCH CONTACT SHALL BE ANY NON-ENERGY STORING OR GENERATING SWITCH TYPE DEVICE CONTAINING NO CAPACITANCE OR INDUCTANCE.

AVAILABLE 3-PHASE FAULT CURRENT AT THE TRANSFORMER SECONDARY TERMINALS IS ESTIMATED BY FPL TO BE ____ RMS SYMMETRICAL AMPS AND DOES NOT INCLUDE: CONSIDERATION FOR ANY MOTOR CONTRIBUTION AND/OR FAULT CURRENT ASYMMETRY

FPL FAULT CURRENT LETTER SHALL BE INCLUDED IN THE DRAWINGS.

2-. __00__ H.P. SEWAGE PUMPS __00__ AMPS.
MISCELLANEOUS BASE LOAD __00__ AMPS.
25% OF LARGEST MOTOR __00__ AMPS.
TOTAL __00__ AMPS.
PROVIDE SERVICE SIZE: __00__

LOAD CALCULATION

MISCELLANEOUS LOAD PANEL 'M'

CKT.	DESCRIPTION	VA LOAD
1	CONTROLS	400
2	GFI RECEPTACLE	180
3	BACK UP P'CONTROLLER	180
4	VALVE PIT SUMP PUMP (OUTSIDE RECEPTACLE)	1200
5	SCADA RTU PANEL	750
6	SPARE	1200
7	SPARE	800
8	SPARE	100
	CONNECTED VA	4810

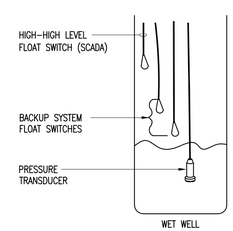

NOTE:
SEE MECHANICAL DRAWINGS FOR PROPOSED ELEVATIONS.

W.W. SENSING DEVICES

N.T.S.

SLX 130-MIS-10-40-B

SLX130: MODEL.
MIS: 4-20mADC. INTRINSICALLY SAFE
10: PRESSURE
5 FOR 0-11.5 FT.
10 FOR 0-23.1 FT.
15 FOR 0-34.6 FT.
30 FOR 0-69.3 FT.
40: FEET OF CABLE 10 FT INCREMENT
B: BREATHER SYSTEM ONLY

PRESSURE TRANSDUCER MODEL NUMBER EXAMPLE (ORDERING INFORMATION)

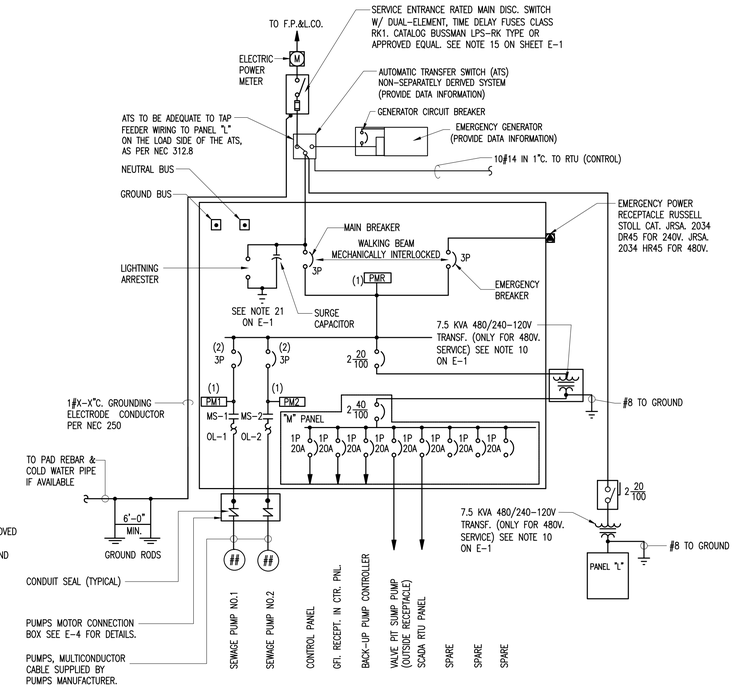

(1) THREE PHASE VOLTAGE MONITORS. INSTALL 2 AMPS. FAST ACTING FUSES IN SERIES WITH EACH OF THE INPUTS.
(2) PROVIDE MOTOR CIRCUIT PROTECTORS WITH (MCP) AUXILIARY CONTACTS

ALL OVERCURRENT PROTECTION DEVICES SHALL BE RATED FOR THE AVAILABLE FAULT CURRENT

ONE LINE DIAGRAM

N.T.S.

SERVICE: 1-PH, 3#8 & 1#10(G)
VOLTAGE: 240/120V

PANEL 'L'

MAIN: 2P-40A M.C.B.
LOCATION: CONTROL PANEL

VA	POLE	TRIP	COND.	WIRE	REMARKS				REMARKS	WIRE	COND.	TRIP	POLE	VA
400	1	20	3/4"	2#12 & (G)	INSIDE LIGHTS .	1		2	GEN. JACKET HEATER	2#12 & (G)	3/4"	20	1	1500
720	1	20	3/4"	2#12 & (G)	RECEPTACLES	3		4	RECEPTACLES	2#12 & (G)	3/4"	20	1	720
1200	1	20	3/4"	2#12 & (G)	EXHAUST FAN	5		6	OUTSIDE LIGHTS	2#12 & (G)	3/4"	20	1	400
960	1	20	3/4"	2#12 & (G)	DAY TANK PUMP	7		8	BATTERY CHARGER	2#12 & (G)	3/4"	20	1	800
100	1	20	–	–	SPARE	9		10	SPARE	–	–	20	1	100
100	1	20	–	–	SPARE	11		12	SPARE	–	–	20	1	100
3480 TOTAL					TOTAL CONNECTED LOAD: 7100 VA @ 240/120 VOLTS									TOTAL 3620

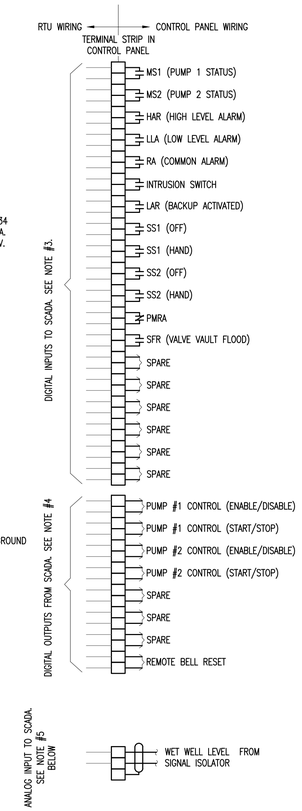

RTU WIRING INSTALLATION NOTES:

1-. WIRING TO SCADA RTU PANEL TO BE FURNISHED AND INSTALLED BY CONTRACTOR. TERMINATIONS TO BE PERFORMED BY MD-WASD ELECTRICIANS.
2-. PROVIDE AT LEAST 20 SPARE TERMINALS, 1 POLE EACH.
3-. DIGITAL INPUTS TO SCADA SHALL BE WIRED WITH #14 THHN STR. BLUE.
4-. DIGITAL OUTPUTS FROM SCADA SHALL BE WIRED WITH #14 THHN STR. RED.
5-. 4-20 MILLIAMPERES DIRECT CURRENT SIGNAL CABLE SHALL BE BELDEN 9341 TWISTED PAIR OR EQUAL INSTALL IN A SEPARATE CONDUIT.
6-. CONNECT FIELD DEVICES PRESSURE TRANSMITTER AND FLOW METER (IF AVAILABLE) TO RTU PANEL. USE BELDEN CABLE 9341 AND 1 INCH CONDUIT AS REQUIRED (SEE SHEET E-5).

RTU TERMINAL BLOCK

DANGER

Arc - Flash Hazard and Shock Hazard

X' - X" - Arc Flash Protection Boundary
XXX - Incident Energy Flash Hazard at 18 inches

CLASS X
Arc - Flash Hazard Risk Category

Appropriate XX PPE Required for both Arc-Flash and Shock Hazards:
Safety Glasses/Goggles, Hard Hat, Flash Suit Hood, Leather Gloves, Leather Work Shoes, Hearing Protection, FR clothing system with an ATPV rating > = X cal/cm2, Class XX Voltage Rated Gloves, Voltage Rated Tools

XXXVAC – Shock Hazard with covers/doors open
3' – 6" – Limited Approach Boundary
1' – 0" – Restricted Approach Boundary
0' – 1" – Prohibited Approach Boundary

Shock Hazard

LOCATION: PS-XXXX PROTECTIVE DEVICE: Main Circuit Breaker

NOTES:
1- LABEL BACKGROUND SHALL BE WHITE COLOR.
2- LABEL LETTERING SHALL BE BLACK COLOR.
3- 'DANGER' WORD SHALL BE WHITE COLOR WITH RED BACKGROUND.
4- LABEL SIZE SHALL BE 4 X 6 INCHES.
5- INFORMATION PRINTED ON LABEL SHALL BE VERIFIED AND PROVED BY CONTRACTOR.
6- THE LABEL SHALL BE LOCATED SO AS TO BE CLEARLY VISIBLE TO QUALIFIED PERSONS BEFORE EXAMINATION, ADJUSTMENT, SERVICING, OR MAINTENANCE OF THE EQUIPMENT NEC 110.16.
7- SEE NOTE 26 OF ELECTRICAL GENERAL NOTES SHEET 1.

ARC FLASH LABEL

BREAKERS, WIRING AND CONDUIT SCHEDULE

VOLTS & PHASE	MOTOR HP	MOTOR AMP CODE	START SIZE	MOTOR CIRCUIT PROTECT. AMPS	MOTOR WIRE THWN CU. NOTE 13 ON E-5	SIZED FOR TWO PUMP STATIONS: MAIN & STAND-BY BREAKERS	SERVICE: GROUNDING	SERVICE: POWER
240-1ϕ	5	28	2	60	3#8 IN 1 1/2"	100	#6	3#2, IN 1-1/2"C
240-1ϕ	7.5	40	2	80	2#6 & 1#8G. IN 1-1/2"	150	#6	3#1/0, IN 2"C
240-3ϕ	5	15.2	1	30	4#10 IN 1 1/2'	100	#6	4#2, IN 1-1/2"C
240-3ϕ	7.5	22	2	50	4#8 IN 1 1/2"	100	#6	4#2, IN 1-1/2"C
240-3ϕ	10	28	2	50	3#6 & 1#8G. IN 1-1/2"	100	#6	4#2, IN 1-1/2"C
240-3ϕ	15	42	3	100	3#4 & 1#8G. IN 2"	150	#6	4#1/0, IN 2"C
480-3ϕ	5	7.6	1	15	4#12 IN 1 1/2"	70	#6	4#3, IN 1-1/2"C
480-3ϕ	7.5	11	1	30	4#12 IN 1 1/2"	70	#6	4#3, IN 1-1/2"C
480-3ϕ	10	14	2	30	4#10 IN 1 1/2"	70	#6	4#3, IN 1-1/2"C
480-3ϕ	15	21	2	50	4#10 IN 1 1/2"	70	#6	4#3, IN 1-1/2"C
480-3ϕ	20	27	2	50	4#8 IN 2"	125	#6	4#1, IN 2"C
480-3ϕ	25	34	3	50	3#6 & 1#8G. IN 2"	150	#6	4#1/0, IN 2"C
480-3ϕ	30	40	3	100	3#6 & 1#8G. IN 2"	200	#4	4#3/0, IN 2"C
480-3ϕ	40	52	3	100	3#4 & 1#6G. IN 2"	200	#4	4#3/0, IN 2"C
480-3ϕ	50	65	4	100	3#3 & 1#6(G) IN 2"	200	#4	4#3/0, IN 2"C
480-3ϕ	60	77	4	150	3#2 & 1#6(G) IN 2"	225	#2	4#4/0, IN 2 1/2"C

NOTE:
IN CASE THE EXISTING VOLTAGE SYSTEM IS 240V, 3ϕ, AND THE PROPOSED PUMPS RATED AT 15 HP OR HIGHER THE ENGINEER SHALL VERIFY WITH FPL AND MDWASD IF IT IS REQUIRED TO INCREASE THE VOLTAGE SYSTEM TO 480/277V, 3ϕ.

THESE ARE NOT CONSTRUCTION DRAWINGS. THE INFORMATION HEREIN CONTAINED SHALL ONLY BE USED AS GENERAL GUIDELINE OF THE INTENDED OPERATION AND FUNCTIONS AND SHALL NOT BE CONSTRUED AS ALL INCLUSIVE. ENGINEERS OF RECORD AND CONSULTANTS USING THESE GUIDELINES SHALL VERIFY AND MODIFY ANY REQUIREMENT NOT NECESSARILY SHOWN AS MAY BE REQUIRED BY ANY AND ALL APPLICABLE CODES AND STANDARDS.

MIAMI-DADE COUNTY
Delivering Excellence Every Day
WATER & SEWER DEPARTMENT
3071 SW 38TH AVENUE
MIAMI, FL 33146-1520
305-665-7471
www.miamidade.gov/water
ENGINEERING & DESIGN DIVISION
3575 S LE JEUNE RD
MIAMI, FL 33146
786-268-5250

PCTS 00000/CONTRACT X-000 or RPQ/ERX00000
SUBMERSIBLE PUMPING STATION WITH GENERATOR
PUMPING STATION No. 0000 (UPDATE 2015)
PROJECT OFFICIAL ADDRESS

POWER/CONTROL (MPE) AND WIRING SCHEDULE

DRAWING HISTORY

	RELEASED FOR	DATE	BY
X	REVIEW 90%	06/19/15	LMS
	REVIEW 00%		
	PERMIT		
	BID		
	AS-BUILT		

REVISIONS

No.	DESCRIPTION	DATE	BY
1	XXXXXX XXXXXX	06/19/15	LS

APPROVALS

PROJECT MGR: X.X.X. CHECKED: X.X.X.
DESIGNED: X.X.X. DRAWN: X.X.X.
CHIEF ENGINEER: J.B.F.
DESIGN MNGR.: R.J.A.
UNIT HEAD: L.S.

Xxxx Xxxxx, P.E.
Xxxxx Engineer
State of Florida-License No.00000
Date:_____

FILE NAME: 00000E03A.DWG
DATE: 06/19/2015 SCALE:
SHEET E-3A
DWG. No. S-00000-A