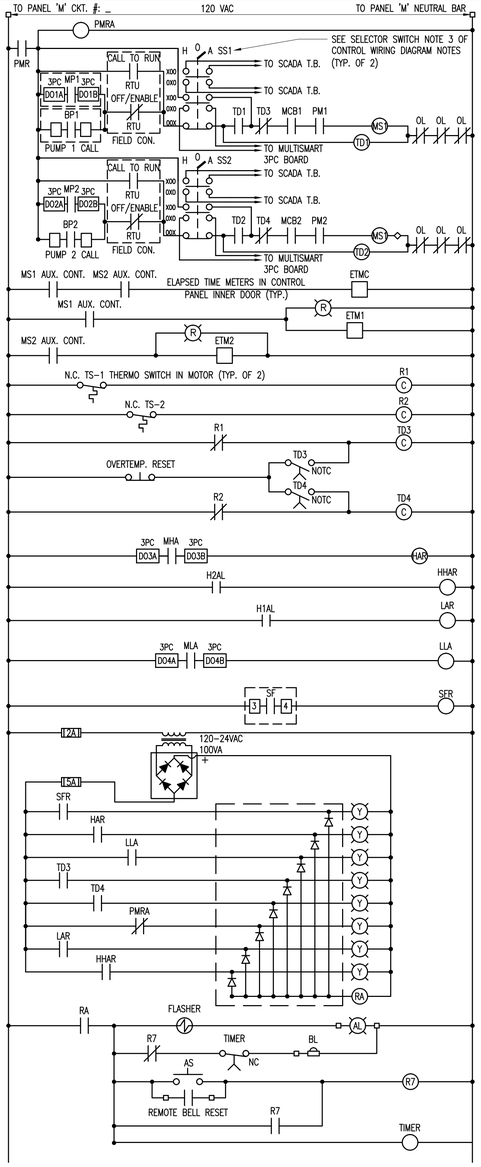

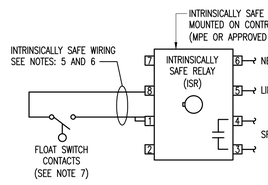

CONTROL WIRING DIAGRAM NOTES:

1- USE SHIELDED WIRE FOR ALL DISCRETE INPUT WIRING. GROUND SHIELD AT SOURCE END.
2- TO PROTECT AGAINST TRANSIENTS CONNECT ALL GROUND CONDUCTORS TOGETHER AND RUN ONE WIRE TO CONTROL PANEL ('PANEL ID') GROUND BAR.
3- ON H- O- A SWITCHES PROVIDING SUFFICIENT NUMBER OF CONTACT BLOCKS WIRED TO THE SCADA TERMINAL BLOCK AND TO PUMP CONTROLLER SC2000 AS SHOWN.
4- FOR MORE INFORMATION CONSULT MULTITRODE-MULTISMART, MULTITRODE-MTR RELAYS, AND CONTEGRA SLX PRODUCT MANUAL.
5. ALL INTRINSICALLY SAFE WIRING SHALL BE SEPARATED FROM NON-INTRINSICALLY SAFE WIRING. REFER TO ARTICLE 504 OF THE NATIONAL ELECTRIC CODE (ANSF/NFPA 70) FOR INSTALLATION OF INTRINSICALLY SAFE WIRING.
6. MAXIMUM DISTANCE BETWEEN UNIT AND SWITCH CONTACTS IS 1000 FEET.
7. SWITCH CONTACT SHALL BE ANY NON-ENERGY STORING OR GENERATING SWITCH TYPE DEVICE CONTAINING NO CAPACITANCE OR INDUCTANCE.

PROPOSED CONTROL WIRING DIAGRAM

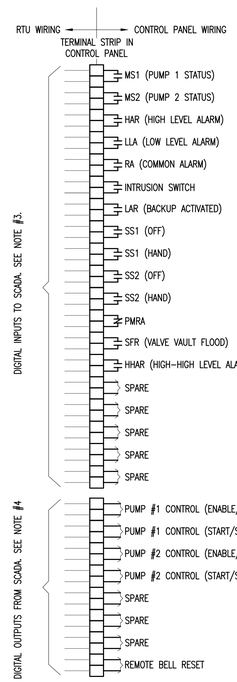

RTU TERMINAL BLOCK

RTU WIRING INSTALLATION NOTES:

1-. WIRING TO SCADA RTU PANEL TO BE FURNISHED AND INSTALLED BY CONTRACTOR. TERMINATIONS TO BE PERFORMED BY MD-WASD ELECTRICIANS.
2-. PROVIDE AT LEAST 20 SPARE TERMINALS, 1 POLE EACH.
3-. DIGITAL INPUTS TO SCADA SHALL BE WIRED WITH #14 THHN STR. BLUE.
4-. DIGITAL OUTPUTS FROM SCADA SHALL BE WIRED WITH #14 THHN STR. RED.
5-. 4-20 MILLIAMPERES DIRECT CURRENT SIGNAL CABLE SHALL BE BELDEN 9341 TWISTED PAIR OR EQUAL INSTALL IN A SEPARATE CONDUIT.
6-. CONNECT FIELD DEVICES PRESSURE TRANSMITTER AND FLOW METER (IF AVAILABLE) TO RTU PANEL. USE BELDEN CABLE 9341 AND 1 INCH CONDUIT AS REQUIRED (SEE SHEET E-5).

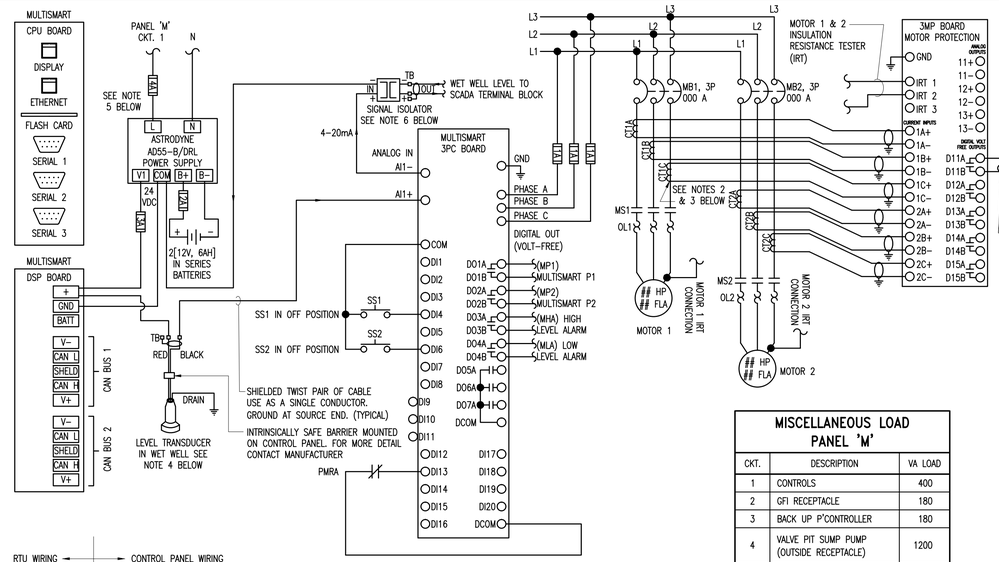

MULTISMART PUMP CONTROLLER NOTES:

1- PROVIDE 2[12V-6Ah] SERIES CONNECTED BACK-UP BATTERIES.
2- CURRENT TRANSFORMER OUTPUT SHALL BE 0-5A. WIRE WITH THE CORRECT POLARITY AND MAKE SURE THAT THE CURRENT PHASE CORRESPONDS TO THE VOLTAGE PHASE.
3- USE SHIELD TWISTED PAIR CABLE BETWEEN CT'S AND MPB. DO NOT GROUND CURRENT TRANSFORMERS.
4- PRESSURE TRANSDUCER MODEL NUMBER: SLX 130-MIS-10-##-B BY CONTEGRA OR APPROVED EQUAL.
5- POWER SUPPLY WITH BATTERY CHARGER ASTRODYNE MODEL AD55-B/DRL OR APPROVED EQUAL. PROPOSED POWER SUPPLY INRUSH CURRENT WHEN COLD IS 20A. SELECTED PROTECTIVE FUSE SHALL WITHSTAND SUCH CURRENT.
6- SIGNAL ISOLATOR BY PHOENIX CONTACT OR APPROVED EQUAL. PROVIDE A POWERED SIGNAL ISOLATOR IN CASE RTU ASSEMBLY IS FAR FROM CONTROL PANEL.

MULTISMART PUMP CONTROLLER

PROVIDE MULTITRODE COMPANY WITH DESIGN FUNCTION OF EACH MULTISMART DIGITAL AND/OR ANALOG INPUT. SEE EXAMPLE BELOW.

1- DI4 & DI6:
DESCRIPTION:
(0) SELECTOR SWITCH IS EITHER ON AUTO OR HAND POSITION.
(1) SELECTOR SWITCH IS ON OFF POSITION.
FUNCTION:
(0) STANDARD FUNCTIONALITY.
(1) OUTPUT RELAYS 'DO1' AND 'DO2' HOLD OPEN.

2- DI13:
DESCRIPTION:
(0) STATION IS FUNCTIONING REGULARLY.
(1) STATION IS EITHER OFF POWER OR A SERVICE FAULT HAS BEEN DETECTED.
FUNCTION:
(0) STANDARD FUNCTIONALITY.
(1) OUTPUT RELAYS 'DO1' AND 'DO2' HOLD OPEN.

MULTISMART PROGRAMMING NOTES

SLX 130-MIS-10-40-B

SLX130: MODEL.
MIS: 4-20mADC. INTRINSICALLY SAFE PRESSURE
10: 5 FOR 0-11.5 FT.
10 FOR 0-23.1 FT.
15 FOR 0-34.6 FT.
30 FOR 0-69.3 FT.
40: FEET OF CABLE 10 FT INCREMENT
B: BREATHER SYSTEM ONLY

PRESSURE TRANSDUCER MODEL NUMBER EXAMPLE (ORDERING INFORMATION)

2-.	00 H.P. SEWAGE PUMPS	00 AMPS.
	MISCELLANEOUS BASE LOAD	00 AMPS.
	25% OF LARGEST MOTOR	00 AMPS.
	TOTAL	00 AMPS.

PROVIDE SERVICE SIZE: 00

LOAD CALCULATION

MISCELLANEOUS LOAD PANEL 'M'

CKT.	DESCRIPTION	VA LOAD
1	CONTROLS	400
2	GFI RECEPTACLE	180
3	BACK UP P'CONTROLLER	180
4	VALVE PIT SUMP PUMP (OUTSIDE RECEPTACLE)	1200
5	SCADA RTU PANEL	750
6	SPARE	1200
7	SPARE	800
8	SPARE	100
	CONNECTED VA	4810

AVAILABLE 3-PHASE FAULT CURRENT AT THE TRANSFORMER SECONDARY TERMINALS IS ESTIMATED BY FPL TO BE _____ RMS SYMMETRICAL AMPS AND DOES NOT INCLUDE: CONSIDERATION FOR ANY MOTOR CONTRIBUTION AND/OR FAULT CURRENT ASYMMETRY

FPL FAULT CURRENT LETTER SHALL BE INCLUDED IN THE DRAWINGS.

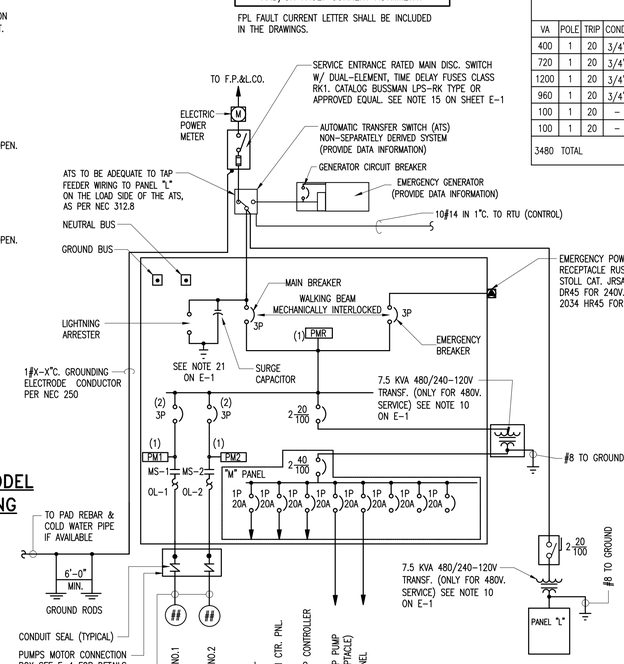

(1) THREE PHASE VOLTAGE MONITORS. INSTALL 2 AMPS. FAST ACTING FUSES IN SERIES WITH EACH OF THE INPUTS.
(2) PROVIDE MOTOR CIRCUIT PROTECTORS WITH (MCP) AUXILIARY CONTACTS

ALL OVERCURRENT PROTECTION DEVICES SHALL BE RATED FOR THE AVAILABLE FAULT CURRENT

ONE LINE DIAGRAM

N.T.S.

NOTES:
1- LABEL BACKGROUND SHALL BE WHITE COLOR.
2- LABEL LETTERING SHALL BE BLACK COLOR.
3- 'DANGER' WORD SHALL BE WHITE COLOR WITH RED BACKGROUND.
4- LABEL SIZE SHALL BE 4 X 6 INCHES.
5- INFORMATION PRINTED ON LABEL SHALL BE VERIFIED AND PROVED BY CONTRACTOR.
6- THE LABEL SHALL BE LOCATED SO AS TO BE CLEARLY VISIBLE TO QUALIFIED PERSONS BEFORE EXAMINATION, ADJUSTMENT, SERVICING, OR MAINTENANCE OF THE EQUIPMENT NEC 110.16.
7- SEE NOTE 26 OF ELECTRICAL GENERAL NOTES SHEET 1.

DANGER

Arc - Flash Hazard and Shock Hazard

X' - X" - Arc Flash Protection Boundary
XXX - Incident Energy Flash Hazard at 18 inches

CLASS X
Arc - Flash Hazard Risk Category

Appropriate XX PPE Required for both Arc-Flash and Shock Hazards: Safety Glasses/Goggles, Hard Hat, Flash Suit Hood, Leather Gloves, Leather Work Shoes, Hearing Protection, FR clothing system with an ATPV rating >= X cal/cm2, Class XX Voltage Rated Gloves, Voltage Rated Tools

XXXVAC -- Shock Hazard with covers/doors open
3' -- 6" -- Limited Approach Boundary
1' -- 0" -- Restricted Approach Boundary
0' -- 1" -- Prohibited Approach Boundary

Shock Hazard

LOCATION: PS-XXXX PROTECTIVE DEVICE: Main Circuit Breaker

ARC FLASH LABEL

BREAKERS, WIRING AND CONDUIT SCHEDULE

VOLTS & PHASE	MOTOR HP	MOTOR AMP CODE	START SIZE	MOTOR CIRCUIT PROTECT. AMPS	MOTOR WIRE THWN CU. NOTE 13 ON E-5	SIZED FOR TWO PUMP STATIONS: MAIN & STAND-BY BREAKERS	SERVICE: GROUNDING	SERVICE: POWER
240-1ϕ	5	28	2	60	3#8 IN 1 1/2"	100	#6	3#2, IN 1-1/2"C
240-1ϕ	7.5	40	2	80	2#6 & 1#8G. IN 1-1/2"	150	#6	3#1/0, IN 2"C
240-3ϕ	5	15.2	1	30	4#10 IN 1 1/2'	100	#6	4#2, IN 1-1/2"C
240-3ϕ	7.5	22	2	50	4#8 IN 1 1/2"	100	#6	4#2, IN 1-1/2"C
240-3ϕ	10	28	2	50	3#6 & 1#8G. IN 1-1/2"	100	#6	4#2, IN 1-1/2"C
240-3ϕ	15	42	3	100	3#4 & 1#8G. IN 2"	150	#6	4#1/0, IN 2"C
480-3ϕ	5	7.6	1	15	4#12 IN 1 1/2"	70	#6	4#3, IN 1-1/2"C
480-3ϕ	7.5	11	1	30	4#12 IN 1 1/2"	70	#6	4#3, IN 1-1/2"C
480-3ϕ	10	14	2	30	4#10 IN 1 1/2"	70	#6	4#3, IN 1-1/2"C
480-3ϕ	15	21	2	50	4#10 IN 1 1/2"	70	#6	4#3, IN 1-1/2"C
480-3ϕ	20	27	2	50	4#8 IN 2"	125	#6	4#1, IN 2"C
480-3ϕ	25	34	3	50	3#6 & 1#8G. IN 2"	150	#6	4#1/0, IN 2"C
480-3ϕ	30	40	3	100	3#6 & 1#8G. IN 2"	200	#4	4#3/0, IN 2"C
480-3ϕ	40	52	3	100	3#4 & 1#6G. IN 2"	200	#4	4#3/0, IN 2"C
480-3ϕ	50	65	4	100	3#3 & 1#6(G) IN 2"	200	#4	4#3/0, IN 2"C
480-3ϕ	60	77	4	150	3#2 & 1#6(G) IN 2"	225	#2	4#4/0, IN 2 1/2"C

SERVICE: 1-PH, 3#8 & 1#10(G)
VOLTAGE: 240/120V

PANEL 'L'

MAIN: 2P-40A M.C.B.
LOCATION: CONTROL PANEL

VA	POLE	TRIP	COND.	WIRE	REMARKS			REMARKS	WIRE	COND.	TRIP	POLE	VA
400	1	20	3/4"	2#12 & (G)	INSIDE LIGHTS .	1	2	GEN. JACKET HEATER	2#12 & (G)	3/4"	20	1	1500
720	1	20	3/4"	2#12 & (G)	RECEPTACLES	3	4	RECEPTACLES	2#12 & (G)	3/4"	20	1	720
1200	1	20	3/4"	2#12 & (G)	EXHAUST FAN	5	6	OUTSIDE LIGHTS	2#12 & (G)	3/4"	20	1	400
960	1	20	3/4"	2#12 & (G)	DAY TANK PUMP	7	8	BATTERY CHARGER	2#12 & (G)	3/4"	20	1	800
100	1	20	–	–	SPARE	9	10	SPARE	–	–	20	1	100
100	1	20	–	–	SPARE	11	12	SPARE	–	–	20	1	100
3480 TOTAL					TOTAL CONNECTED LOAD: 7100 VA @ 240/120 VOLTS							TOTAL	3620

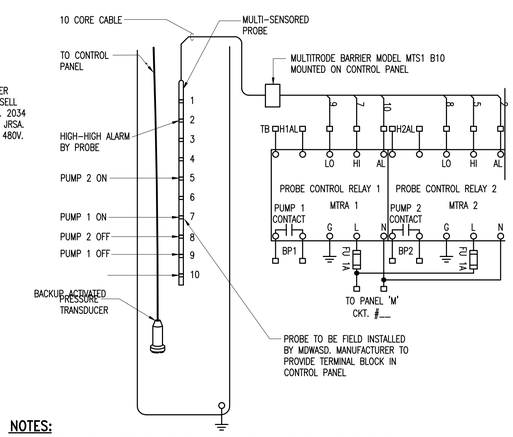

NOTES:

1- HANG PROBE IN TURBULENT AREA OF WET WELL. PROVIDE MEANS TO REMOVE PROBE TO BE CLEANED WITHOUT ENTERING THE WET WELL.
2- DO NOT INSTALL THE PROBE IN A STAGNANT AREA OR CORNER WHERE GREASE AND DEBRIS MAY COLLECT. STILLING WELLS ARE NOT SUGGESTED.
3- ENSURE A MINIMUM OF 12" CLEARANCE FROM ANY SURFACE.
4- ENSURE BOTTOM OF PROBE IS 1/2" ABOVE MINIMUM BACK-UP PUMPING LEVEL.
5- PROBE START AND STOP POINTS SHALL BE SET ABOVE AND BELOW MULTISMART CONTROL RANGE.
6- THE PROBE CABLE MUST BE BURIED (OUTSIDE THE WELL) IN A SEPARATE METAL CONDUIT AND SHIELDED FOR CORRECT OPERATION OF THE LEVEL-SENSING DEVICE
7- MOST PITS ARE ADEQUATELY EARTHED OR GROUNDED AND DO NOT REQUIRE ANY REFERENCE RODS, HOWEVER PVC OR FIBRE GLASS TANKS WITHOUT PUMPS OR METALIC GROUNDED PIPE REQUIRE REFERENCE RODS.
8- PROBE CABLE SHALL BE RUN IN A SEPARATE CONDUIT AWAY FROM ANY HIGH VOLTAGE SIGNALS.
9- PROVIDE PROBE MODEL CONSIDERING WET WELL DEPTH.

PROBE AND BACK-UP SYSTEM DIAGRAM

THESE ARE NOT CONSTRUCTION DRAWINGS. THE INFORMATION HEREIN CONTAINED SHALL ONLY BE USED AS GENERAL GUIDELINE OF THE INTENDED OPERATION AND FUNCTIONS AND SHALL NOT BE CONSTRUED AS ALL INCLUSIVE. ENGINEERS OF RECORD AND CONSULTANTS USING THESE GUIDELINES SHALL VERIFY AND MODIFY ANY REQUIREMENT NOT NECESSARILY SHOWN AS MAY BE REQUIRED BY ANY AND ALL APPLICABLE CODES AND STANDARDS.

MIAMI-DADE COUNTY
Delivering Excellence Every Day
WATER & SEWER DEPARTMENT
3071 SW 38TH AVENUE
MIAMI, FL 33146-1520
305-665-7471
www.miamidade.gov/water
ENGINEERING & DESIGN DIVISION
3575 S LE JEUNE RD
MIAMI, FL 33146
786-268-5250

PCTS 00000/CONTRACT X-000 or RPQ/ERX00000
SUBMERSIBLE PUMPING STATION WITH GENERATOR
PUMPING STATION No. 0000 (UPDATE 2015)
PROJECT OFFICIAL ADDRESS

MULTISMART CONTROL AND SCADA TERMINALS

DRAWING HISTORY

	RELEASED FOR	DATE	BY
X	REVIEW 90%	06/19/15	LMS
	REVIEW 00%		
	PERMIT		
	BID		
	AS-BUILT		

REVISIONS

No.	DESCRIPTION	DATE	BY
1	XXXXXX XXXXXX	06/19/15	LS

APPROVALS

PROJECT MGR: X.X.X. CHECKED: X.X.X.
DESIGNED: X.X.X. DRAWN: X.X.X.
CHIEF ENGINEER: J.B.F.
DESIGN MNGR.: R.J.A.
UNIT HEAD: L.S.

Xxxx Xxxxx, P.E.
Xxxxx Engineer
State of Florida-License No.00000
Date:_____

FILE NAME: 00000E03B1.DWG
DATE: 06/19/2015 SCALE:
SHEET E-3B
DWG. No. S-00000-D