PREPARED FOR
MIAMI-DADE COUNTY
WATER AND SEWER
DEPARTMENT

Biscayne Bay Coastal Wetlands Rehydration Pilot Project

PRELIMINARY ENGINEERING REPORT – APPENDICES | JUNE 2009

MWH

BUILDING A BETTER WORLD

In Association with Brown & Caldwell

Appendix A
Process Flow Diagram

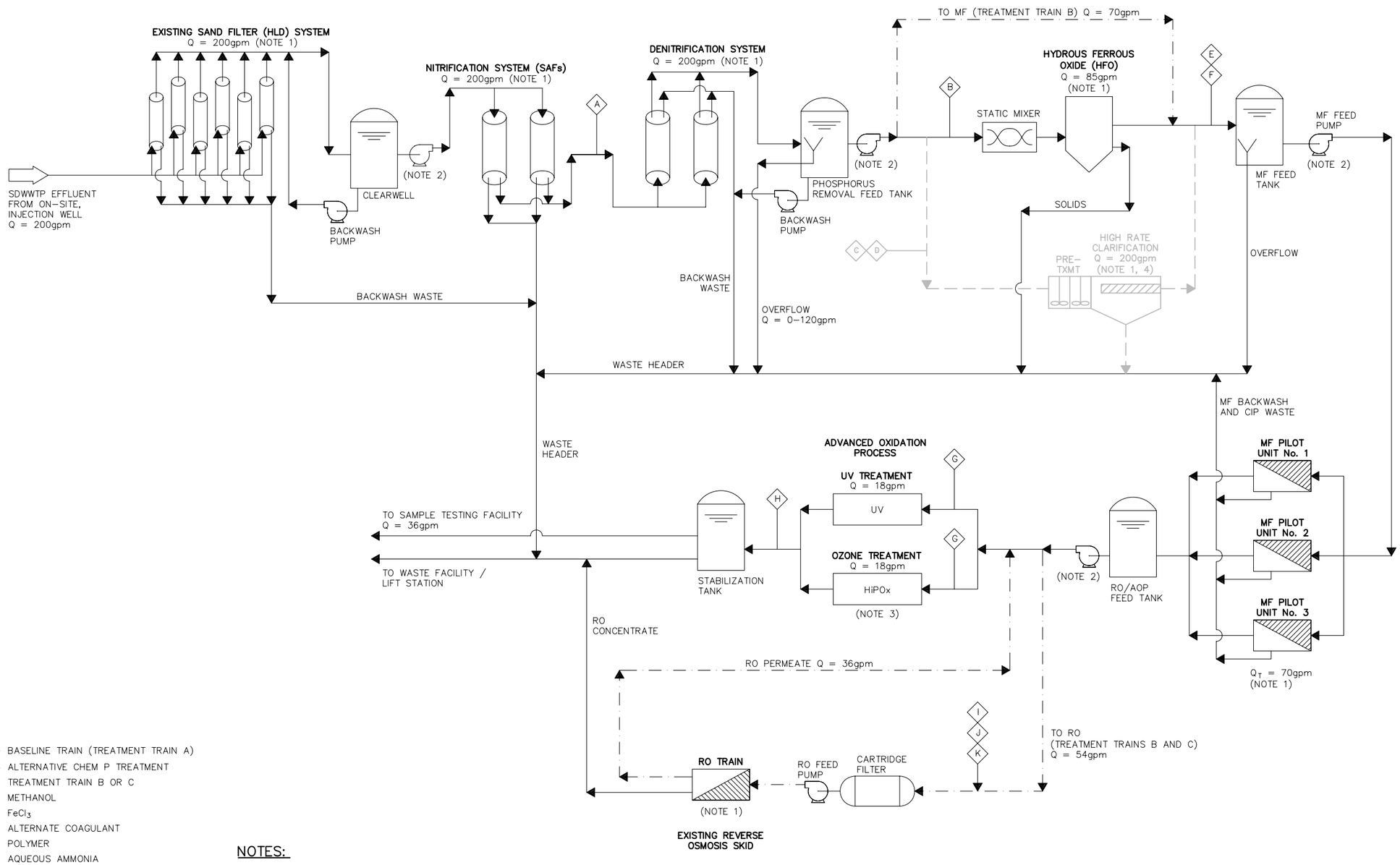

LEGEND:

————	BASELINE TRAIN (TREATMENT TRAIN A)
— · — · —	ALTERNATIVE CHEM P TREATMENT
— — · —	TREATMENT TRAIN B OR C
A	METHANOL
B	$FeCl_3$
C	ALTERNATE COAGULANT
D	POLYMER
E	AQUEOUS AMMONIA
F	SODIUM HYPOCHLORITE
G	HYDROGEN PEROXIDE
H	CAUSTIC SODA OR LIME
I	SULFURIC ACID
J	SCALE INHIBITER
K	SODIUM META BISULPHITE

CLEANING CHEMICALS NOT SHOWN

NOTES:

1. SEE SECTION 3 FOR EQUIPMENT AND NUMBER OF UNITS INCLUDED IN PILOT PACKAGE.
2. FEED PUMPS BETWEEN PROCESSES TO BE SUBMERGED WHERE POSSIBLE.
3. EXISTING ON-SITE PILOT EQUIPMENT WILL BE RECONFIGURED AND REUSED WHERE POSSIBLE.
4. HIGH RATE CLARIFICATION TO BE INCLUDED IN PERMANENT SITE ONLY.

MIAMI-DADE COUNTY
Delivering Excellence Every Day
WATER AND SEWER DEPARTMENT
PROGRAM MANAGEMENT DIVISION
3071 SW 38TH AVENUE
MIAMI, FLORIDA 33146-1520
305-665 7471
miamidade.gov
MWH
2655 Le Jeune Rd. Suite 320
Coral Gables, FL 33134
Certificate of Authorization # 6773

BBCWRPP TO1
MIAMI, FLORIDA
PRELIMINARY ENGINEERING REPORT
PROCESS FLOW DIAGRAM

DRAWING HISTORY

RELEASED FOR	DATE	BY
REVIEW 30%		
REVIEW 70%		
REVIEW 90%		
REVIEW 100%		
PERMIT		

REVISIONS

No.	DESCRIPTION	DATE	BY
△			
△			
△			

APPROVALS

CHIEF PMD: –
SECTION HEAD: –
PROJECT MGR.: –
DESIGNED: CHECKED:
DRAWN: FINAL CHECK:

Date:_____

ER No. : –

FILE NAME:
DATE: SCALE:
SHEET
DWG. No.

File = C:\pwWork2h\cer598\d0351525\BBCWRPP-I-1 Saved by CER598 Save date = 5/26/2009 4:23 PM
Job No: 1570907 PLOT DATE: 5/26/2009 4:24 PM BY: CER598

Appendix B
Process and Instrumentation Diagrams

Appendix B
Process and Instrumentation Diagrams

INSTRUMENTATION CALL-OUT

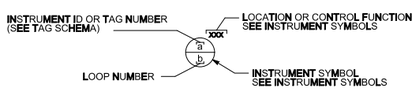

INSTRUMENT SYMBOLS

	PRIMARY LOCATION (ACCESSIBLE) (1)	PRIMARY LOCATION (INACCESSIBLE) (2)	FIELD MOUNTED	AUXILARY LOCATION (ACCESSIBLE) (1)	AUXILARY LOCATION (INACCESSIBLE) (2)
INSTRUMENT	a/b *	a/b *	a/b *	a/b *	a/b *
SHARED DISPLAY SHARED CONTROL	a/b	a/b	a/b	a/b	a/b
COMPUTER FUNCTION	a/b *	a/b *	a/b *	a/b *	a/b *
PROGRAMMABLE LOGIC CONTROL	a/b	a/b	a/b	a/b	a/b

(1) NORMALLY ACCESSIBLE TO OPERATOR

(2) NORMALLY INACCESSIBLE TO OPERATOR (BEHIND-THE-PANEL)

* LOCATION OR CONTROL FUNCTION - SEE BELOW

A INSTRUMENT IDENTIFICATION/TAG NUMBER (SEE TAG DESIGNATION FOR MORE INFO)

B INSTRUMENT LOOP NUMBER

SINGLE INSTRUMENT OR OTHER COMPONENT HAVING MULTIPLE FUNCTIONS

RELAY INTERLOCK LOGIC - SEE SCHEMATICS OR SPECIFICATIONS FOR MORE INFORMATION

INDICATING LIGHT - FIELD MOUNTED, MAY BE LOCATED ON A CONTROL PANEL

INDICATING LIGHT - PANEL MOUNTED

CR CONTROL RELAY

LSA LIGHTNING SURGE ARRESTOR

CONTROL FUNCTION DESIGNATIONS

XXX — DESIGNATIONS SUCH AS 100 (LOCAL CONTROL PANEL NO 100), 200 (LOCAL CONTROL PANEL NO 200), ETC., ARE USED WHEN NECESSARY TO SPECIFY INSTRUMENT OR FUNCTION LOCATION.

AHC	AUTO/HOLD/CLOSE	OO	ON/OFF
AM	AUTO/MANUAL	OSC	OPEN/STOP/CLOSE
AS	AIR SUPPLY	PID	PROPORTIONAL/INTEGRAL/DERIVATIVE
BW	BACKWASH	POT	POTENTIOMETER
DEV	DEVIATION	RL	RAISE/LOWER
HML	HIGH/MID/LOW	RSL	RAISE/STOP/LOWER
HOA	HAND/OFF/AUTO	SD	SHUTDOWN
HOR	HAND/OFF/REMOTE	SEL	SELECT
LOR	LOCAL/OFF/REMOTE	SP	SET POINT
LO-LO	LOW LOW	SR	START/RESET
LOS	LOCKOUT STOP	SS	START/STOP
LR	LOCAL/REMOTE	ST	START
MOA	MANUAL/OFF/AUTO	STR	STOP/RESET
MTR	MOTOR		
OC	OPEN/CLOSE		
OCA	OPEN/CLOSE/AUTO		
OLH	OFF/LOW/HIGH		

INSTRUMENT SYMBOLS - CONT

COMPUTING OR CONVERTING FUNCTIONS

COMPUTING

SUMMING	DERIVATIVE	EXPONENTIAL
ADDITION	AVERAGING	BIAS
SUBTRACTION	RATIO	HIGH LIMITING
MULTIPLYING	DIFFERENCE	LOW LIMITING
DIVIDING	HIGH SELECTING	LINEARIZER
SQ ROOT EXTRACTION	LOW SELECTING	
PROPORTIONAL	INTEGRAL	

CONVERTING

E	VOLTAGE	R	RESISTANCE (ELECT)	A	ANALOG
I	CURRENT	D	DIGITAL	B	BINARY
P	PNEUMATIC	O	ELECTROMAGNETIC, SONIC	H	HYDRAULIC

PLC / REMOTE I/O POINTS

ANALOG INPUT — DISCRETE INPUT — DATA SIGNAL INPUT*

ANALOG OUTPUT — DISCRETE OUTPUT — DATA SIGNAL OUTPUT*

* 2-WIRE NETWORK INTERFACE. SEE SPECIFICATION FOR MORE INFORMATION

INSTRUMENTATION LINE SYMBOLOGY

NEW WORK (UNSCREENED)

EXISTING (SCREENED)

EXISTING TO BE DEMOLISHED

FUTURE EQUIPMENT (LONG DASH, SHORT DASH)

INSTRUMENT LINES

CAPILLARY

DATA LINK

ELECTRIC (PULSE SIGNAL)

ELECTRICAL SIGNAL

ULTRASONIC SIGNAL

HYDRAULIC SIGNAL

MECHANICAL LINK

PNEUMATIC SIGNAL

PROCESS

OTHER INSTRUMENTATION SYMBOLS AND SYMBOLOGY

24 VDC — POWER SUPPLY (SIZE AS NOTED)

AS — AIR SUPPLY

PRIMARY ELECTRICAL POWER (120V/60HZ UNLESS INDICATED OTHERWISE)

* INDICATES VENDOR FURNISHED EQUIPMENT

CABLE (MULTICONDUCTOR OR COAXIAL) FURNISHED WITH EQUIPMENT

(E) EXISTING EQUIPMENT

(F) FUTURE EQUIPMENT

(R) RELOCATED EQUIPMENT

TAG SCHEMA

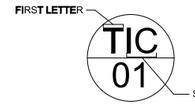

TYPICAL TAG FORMAT

TIC-01 — INSTRUMENT TAG NUMBER
TIC — FUNCTIONAL IDENTIFICATION
T — FIRST LETTER
IC — SUCCEEDING LETTER(S)
01 — LOOP NUMBER

EXPANDED TAG FORMAT

10-PAH-01A — INSTRUMENT TAG NUMBER
10 — AREA / BUILDING NUMBER
PAH — FUNCTIONAL IDENTIFICATION
P — FIRST LETTER
AH — SUCCEEDING LETTER(S)
01 — LOOP NUMBER
A — OPTIONAL SUFFIX

RUN INDICATION SHALL BE RED, OFF INDICATION SHALL BE GREEN

	FIRST LETTER		SUCCEEDING LETTER(S)		
	MEASURED OR INITIATING VARIABLE	MODIFIER	READOUT OR PASSIVE FUNCTION	OUTPUT FUNCTION	MODIFIER
A	ANALYSIS		ALARM		
B	BURNER, COMBUSTION				
C	CONDUCTIVITY			CONTROL	CLOSED
D	DENSITY	DIFFERENTIAL			
E	VOLTAGE		SENSOR (PRIMARY ELEMENT)		
F	FLOW RATE	RATIO (FRACTION)			
G	GAGE		GLASS, VIEWING DEVICE		
H	HAND				HIGH
I	CURRENT (ELECTRICAL)		INDICATE		
J	POWER	SCAN			
K	TIME, TIME SCHEDULE	TIME RATE OF CHANGE		CONTROL STATION	
L	LEVEL		LIGHT		LOW
M	MOTOR	MOMENTARY			MIDDLE, INTERMEDIATE
N	TORQUE		ISOLATE	ISOLATOR	
O			ORIFICE, RESTRICTION		OPEN
P	PRESSURE, VACUUM		POINT (TEST) CONNECTION		
Q	QUANTITY	INTEGRATE, TOTALIZE			
R	RADIATION		RECORD		
S	SPEED, FREQUENCY	SAFETY		SWITCH	
T	TEMPERATURE			TRANSMIT	
U	MULTIVARIABLE		MULTIFUNCTION	MULTIFUNCTION	MULTIFUNCTION
V	VIBRATION, MECHANICAL ANALYSIS			VALVE, DAMPER, LOUVER	
W	WEIGHT, FORCE		WELL		
X	INTRUSION	X AXIS			
Y	EVENT, STATE, OR PRESENCE	Y AXIS		COMPUTER, CONVERT	
Z	POSITION, DIMENSION	Z AXIS		DRIVER, ACTUATOR, FINAL CONTROL ELEMENT	

ABBREVIATIONS

FOC	FIBER OPTIC CABLE	PLC	PROGRAMMABLE LOGIC CONTROLLER
FOR	FIBER OPTIC REPEATER	RIO	REMOTE I/O
FOT	FIBER OPTIC TRANSCEIVER	RVSS	REDUCED VOLTAGE SOLID-STATE STARTER
HMI	HUMAN MACHINE INTERFACE	RTU	REMOTE TERMINAL UNIT
LCP	LOCAL CONTROL PANEL	SW	SEAL WATER
LCS	LOCAL CONTROL STATION	TC	THERMOCOUPLE
MCC	MOTOR CONTROL CENTER	TSP	TWISTED SHIELD PAIR
MCP	MAIN CONTROL PANEL	TBD	TO BE DETERMINED
MOV	MOTOR OPERATED VALVE	UPS	UNINTERRUPTABLE POWER SUPPLY
MS	MOTOR STARTER	VCP	VENDOR CONTROL PANEL
NC	NORMALLY CLOSED	VFD	VARIABLE FREQUENCY DRIVE
NO	NORMALLY OPEN	VSD	VARIABLE SPEED DRIVE
OIT	OPERATOR INTERFACE TERMINAL	WIND	WINDING
PC	PERSONAL COMPUTER		

GENERAL INSTRUMENTATION NOTES

1. ADDITIONAL INSTRUMENTATION AND CONTROL SYMBOLS MAY BE USED AS REQUIRED. SYMBOLS AND NOMENCLATURE ARE BASED ON ISA STANDARD 5.1-INSTRUMENTATION SYMBOLS AND IDENTIFICATION.
2. SEE ELECTRICAL AND MECHANICAL GENERAL SHEETS FOR ADDITIONAL SYMBOLS AND ABBREVIATIONS.
3. SEE SPECIFICATION SECTION 17100 FOR COMPLETE DETAILS OF LOOP DRAWING SUBMITTAL REQUIREMENTS.
4. POWER SUPPLIES FOR INSTRUMENT LOOPS OR SYSTEMS SHALL BE FURNISHED BY THE INSTRUMENTATION SUPPLIER TO MEET THE VOLTAGE AND CURRENT REQUIREMENTS OF THE COMPONENTS IN EACH LOOP OR SYSTEM.
5. FIELD SWITCHES FOR ELECTRIC MOTOR OPERATION SHALL BE SUPPLIED BY THE ELECTRICAL CONTRACTOR. EXCEPTIONS ARE SWITCHES THAT ARE PART OF VENDOR PACKAGES.
6. VALVE ACTUATORS SHALL BE SUPPLIED WITH THE VALVE BY THE VALVE SUPPLIER, UNLESS OTHERWISE NOTED.

SAMPLE LOOP DIAGRAM (ISA EXPANDED FORMAT)

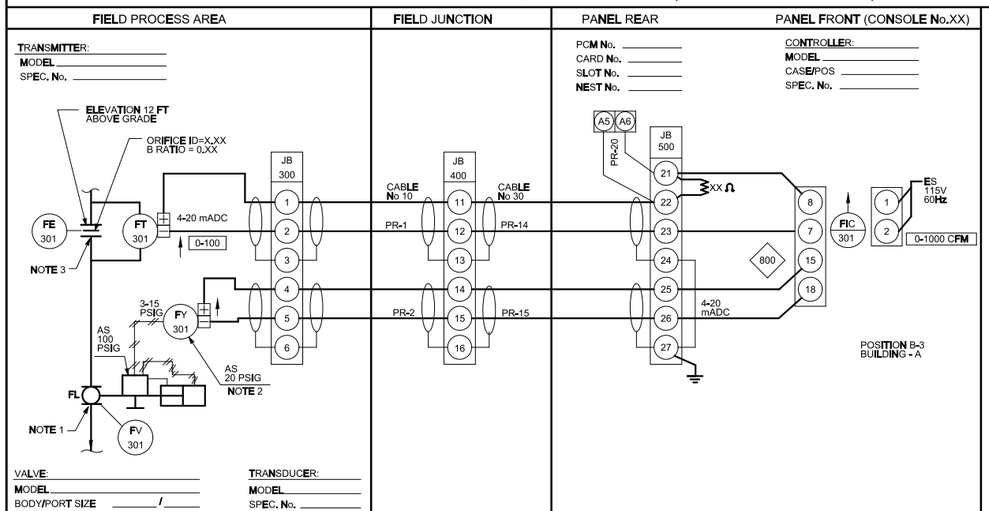

NOTES:

1. FV-301 FULLY OPEN AT 15 PSIG AND FULLY CLOSED AT 3 PSIG.
2. STAND MOUNT NEAR, BUT NOT ON THE CONTROL VALVE.
3. FE-301 REQUIRES 10 PIPE DIAMETERS UPSTREAM AND 5 PIPE DIAMETERS DOWNSTREAM OF STRAIGHT PIPE.
4. DETAIL SURGE ARRESTOR INSTALLATION AND GROUNDING AS APPLICABLE

0-XXXX — INSTRUMENT RANGE

XXX — INSTRUMENT SET POINT

DIRECT ACTING OUTPUT SIGNAL

REVERSE ACTING OUTPUT SIGNAL

REV 05082008

MIAMI-DADE COUNTY
Delivering Excellence Every Day
WATER AND SEWER DEPARTMENT
PROGRAM MANAGEMENT DIVISION
3071 SW 38TH AVENUE MIAMI, FLORIDA 33146-1520
305-665-7471
miamidade.gov

MWH
2655 Le Jeune Rd. Suite 320
Coral Gables, FL 33134
Certificate of Authorization # 6773

BBCWRPP TO1
MIAMI, FLORIDA

PRELIMINARY ENGINEERING REPORT

PROCESS AND INSTRUMENTATION DIAGRAM SYMBOLS AND NOMENCLATURE I

DRAWING HISTORY

RELEASED FOR	DATE	BY
REVIEW 30%		
REVIEW 70%		
REVIEW 90%		
REVIEW 100%		
PERMIT		

REVISIONS

No.	DESCRIPTION	DATE	BY

APPROVALS

CHIEF PMD: –

SECTION HEAD: –

PROJECT MGR.: –

DESIGNED: SMR — CHECKED: SMR

DRAWN: PRP — FINAL CHECK:

DAVID L STEFFES P.E.
I&C ENGINEER
STATE OF FLORIDE – LICENSE NO. 59221
Date:

ER No. : –

FILE NAME: P2RASPS-GI-1.dgn

DATE: — SCALE: NTS

SHEET GI-1

DWG. No.

Job No: 1570907 FileP:\OEB6\WR\P2\42\20\dgn\0.35 AMo.Bar: CPQMQ0\COMEZ Color Tables: bw.ctb DesignScript: MWH_Iplot_Pentable_v85.pen PlotScale: 2.182149-1 File = C:\pwWorkDir\Orlando Gomez\d0\06\P45\BBCWRP TB Saved by Orlando Rivera-Gomez 4/09/2009 8:30:31 AM

Job No: 1570907 File: P:\OTB\BCWRPP\Dwg\110.35 MWH.dgn CONEZ Color Table: bw.ctb DesignScript: MWH_Iplot_Pentable_v85.pen PlotScale: 2.182149:1 File = C:\pwWorkDir\Orlando Conez\d0186145\BBCWRP TB Saved by Orlando Rivera-Diaz at 8/22/2019 8:30:31 AM

HMI

PLC-XX

FIELD

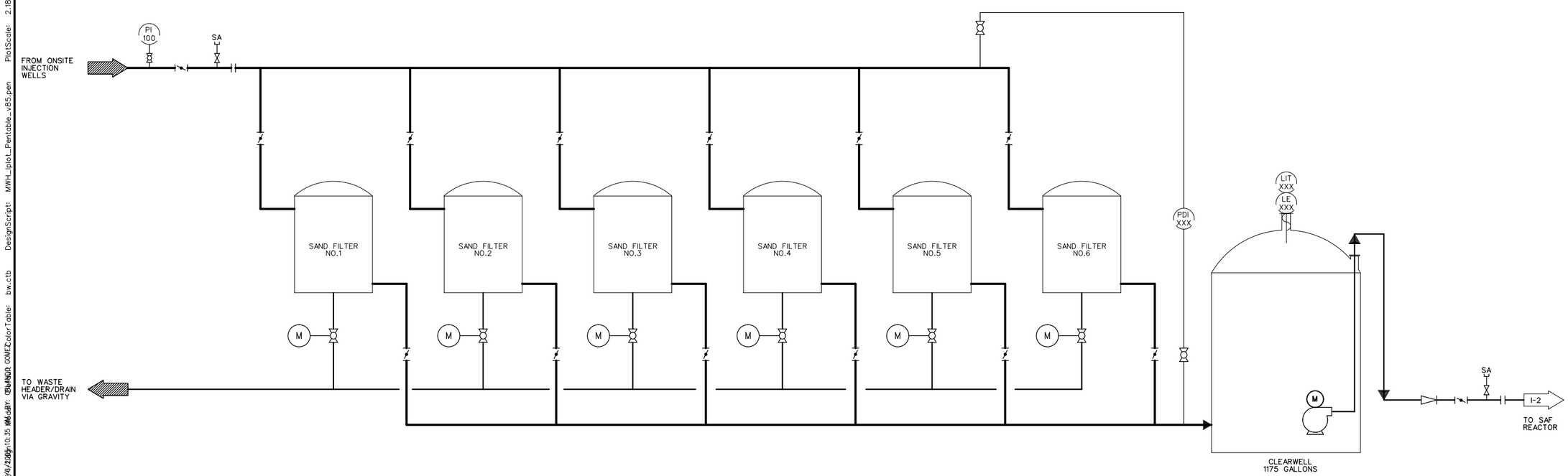

GENERAL NOTE:

1. HIGH LEVEL DISINFECTION FILTERS AND CLEARWELL. SEE VENDOR PROVIDED P&IDS FOR DETAILS.

MIAMI-DADE COUNTY
Delivering Excellence Every Day
WATER AND SEWER DEPARTMENT
PROGRAM MANAGEMENT DIVISION
3071 SW 38TH AVENUE MIAMI, FLORIDA 33146-1520
305-665 7471
miamidade.gov

MWH
2655 Le Jeune Rd. Suite 320
Coral Gables, FL 33134
Certificate of Authorization # 6773

BBCWRPP TO1
MIAMI, FLORIDA

PRELIMINARY ENGINEERING REPORT

PROCESS AND INSTRUMENTATION DIAGRAM
SAND FILTERS

DRAWING HISTORY

RELEASED FOR	DATE	BY
REVIEW 30%		
REVIEW 70%		
REVIEW 90%		
REVIEW 100%		
PERMIT		

REVISIONS

No.	DESCRIPTION	DATE	BY
△			
△			
△			

APPROVALS

CHIEF PMD: –

SECTION HEAD: –

PROJECT MGR.: –

DESIGNED: SMR	CHECKED: SMR
DRAWN: SSP	FINAL CHECK:

Date:_____

ER No. : –

FILE NAME: BBCWRPP–I–1.dgn

DATE:	SCALE: NTS

SHEET

DWG. No. I-1

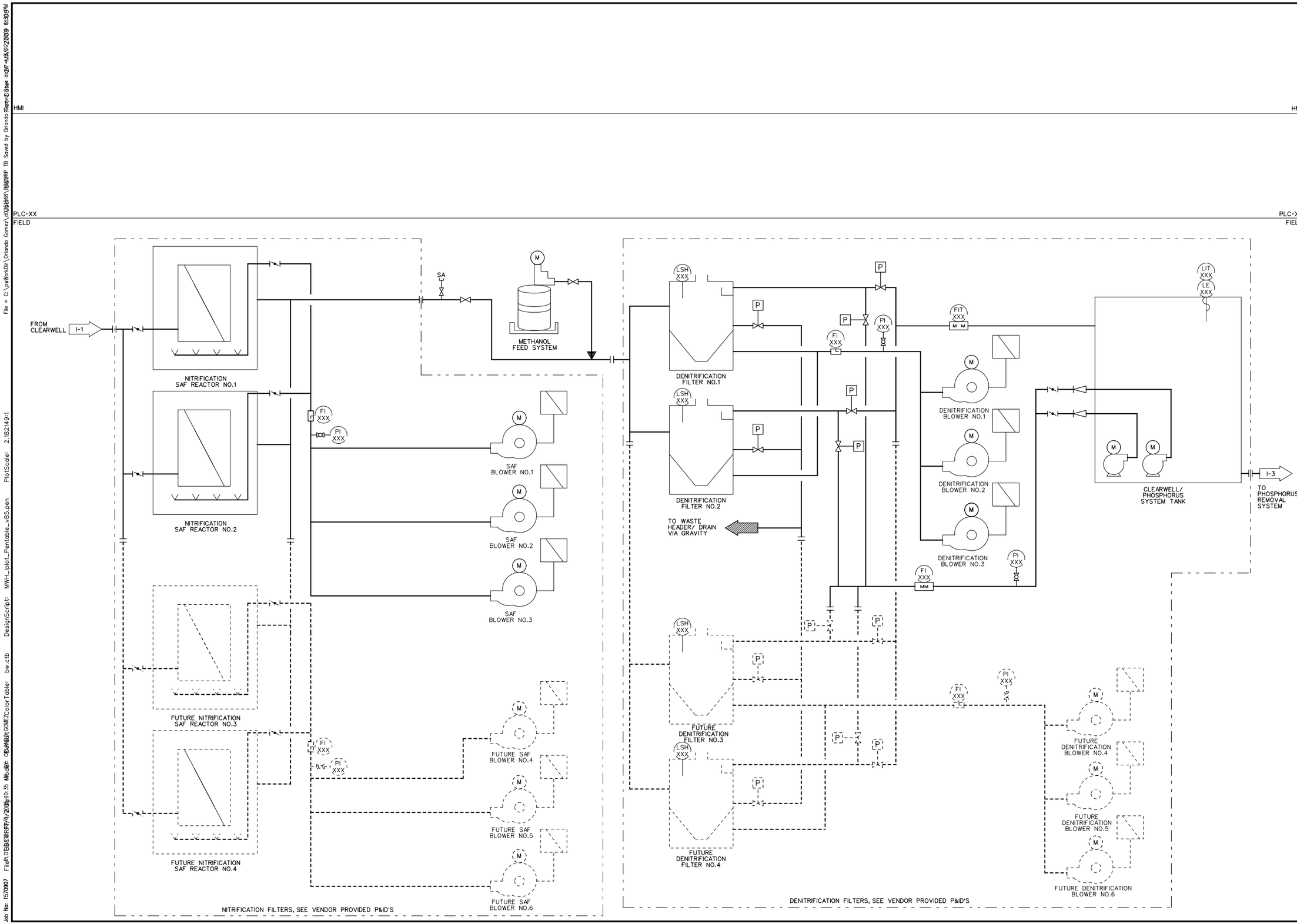

MIAMI-DADE COUNTY
Delivering Excellence Every Day

WATER AND SEWER DEPARTMENT
PROGRAM MANAGEMENT DIVISION
3071 SW 38TH AVENUE MIAMI, FLORIDA 33146-1520
305-665 7471
miamidade.gov

MWH
2655 Le Jeune Rd. Suite 320
Coral Gables, FL 33134
Certificate of Authorization # 6773

BBCWRPP TO1
MIAMI, FLORIDA

PRELIMINARY ENGINEERING REPORT

PROCESS AND INSTRUMENTATION DIAGRAM
NITRIFICATION AND DENITRIFICATION FILTERS

DRAWING HISTORY

RELEASED FOR	DATE	BY
REVIEW 30%		
REVIEW 70%		
REVIEW 90%		
REVIEW 100%		
PERMIT		

REVISIONS

No.	DESCRIPTION	DATE	BY
△			
△			
△			

APPROVALS

CHIEF PMD: –
SECTION HEAD: –
PROJECT MGR.: –

DESIGNED: SMR	CHECKED: SMR
DRAWN: ABB	FINAL CHECK:

Date:_____

ER No. : –

FILE NAME: BBCWRPP–I–2.dgn

DATE:	SCALE: NTS

SHEET

DWG. No. I-2

Job No: 1570907 File:P:\OTB\BBCWRPP\2009\10.35 Mo.dgn OBJAMBIA\COMEZ\ColorTable: bw.ctb DesignScript: MWH_Iplot_Pentable_v85.pen PlotScale: 2.182149:1
File = C:\pwWorkDir\Orlando Gomez\d0016145\BBCWRP TB Saved by Orlando Rivera-Gomez dgn7 4/29/2009 8:30:31 AM

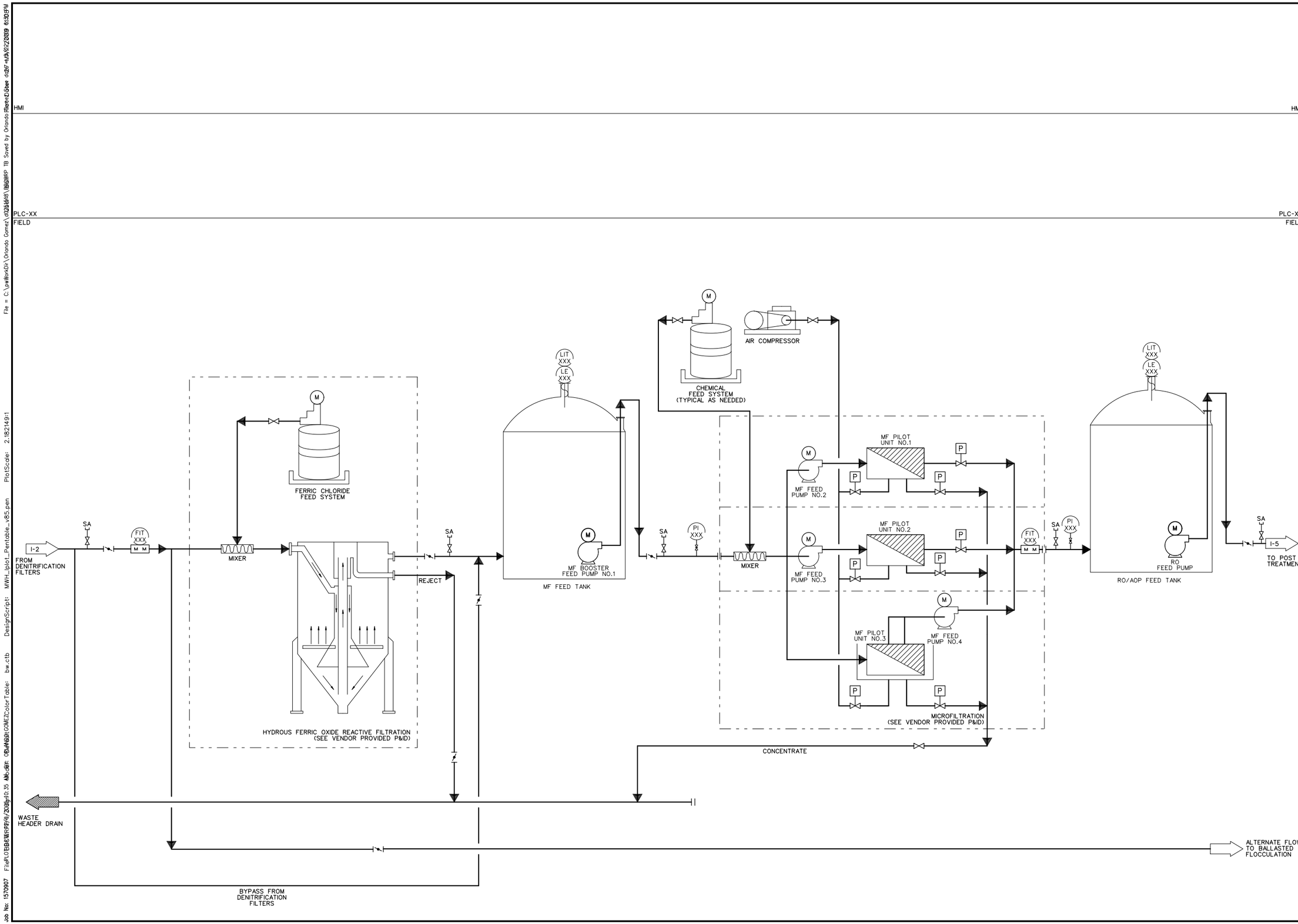

MIAMI-DADE COUNTY
Delivering Excellence Every Day

WATER AND SEWER DEPARTMENT
PROGRAM MANAGEMENT DIVISION
3071 SW 38TH AVENUE MIAMI, FLORIDA 33146-1520
305-665 7471
miamidade.gov

MWH
2655 Le Jeune Rd. Suite 320
Coral Gables, FL 33134
Certificate of Authorization # 6773

BBCWRPP TO1
MIAMI, FLORIDA

PRELIMINARY ENGINEERING REPORT

PROCESS AND INSTRUMENTATION DIAGRAM
HYDROUS FERRIC OXIDE REACTIVE FILTRATION AND MF UNITS

DRAWING HISTORY

RELEASED FOR	DATE	BY
REVIEW 30%		
REVIEW 70%		
REVIEW 90%		
REVIEW 100%		
PERMIT		

REVISIONS

No.	DESCRIPTION	DATE	BY
△			
△			
△			

APPROVALS

CHIEF PMD: –
SECTION HEAD: –
PROJECT MGR.: –

DESIGNED: SMR | CHECKED: SMR
DRAWN: PRP | FINAL CHECK:

Date:_____

ER No. : –

FILE NAME: BBCWRPP-I-3.dgn

DATE: | SCALE: NTS

SHEET

DWG. No. I-3

Job No: 1570907 File#:0\BB&WRPP\9/4/2008 10:35 AM\cdjk 08\AWG\CGMEZ\ColorTable: bw.ctb DesignScript: MWH_Iplot_Pentable_v85.pen PlotScale: 2.182149:1 File = C:\pwWorkDir\Orlando.Gomez\d0\6185\TBS\WRP TB Saved by Orlando.Gomez on 9/4/2008 8:30:31 AM

Job No: 1570907 File#:O:\EBS\WRP\29\49\2006\10.35 AM\ABR OBJ\ABB\CMEZ\ColorTable: bw.ctb DesignScript: MWH_iplot_Pentable_v85.pen PlotScale: 2.1821491:1
File = C:\pwWorkDir\Orlando.Gomez\d0286148\BBCWRP TB Saved by Orlando.Gomez on 5/22/2019 8:30:31 AM

HMI

PLC-XX
FIELD

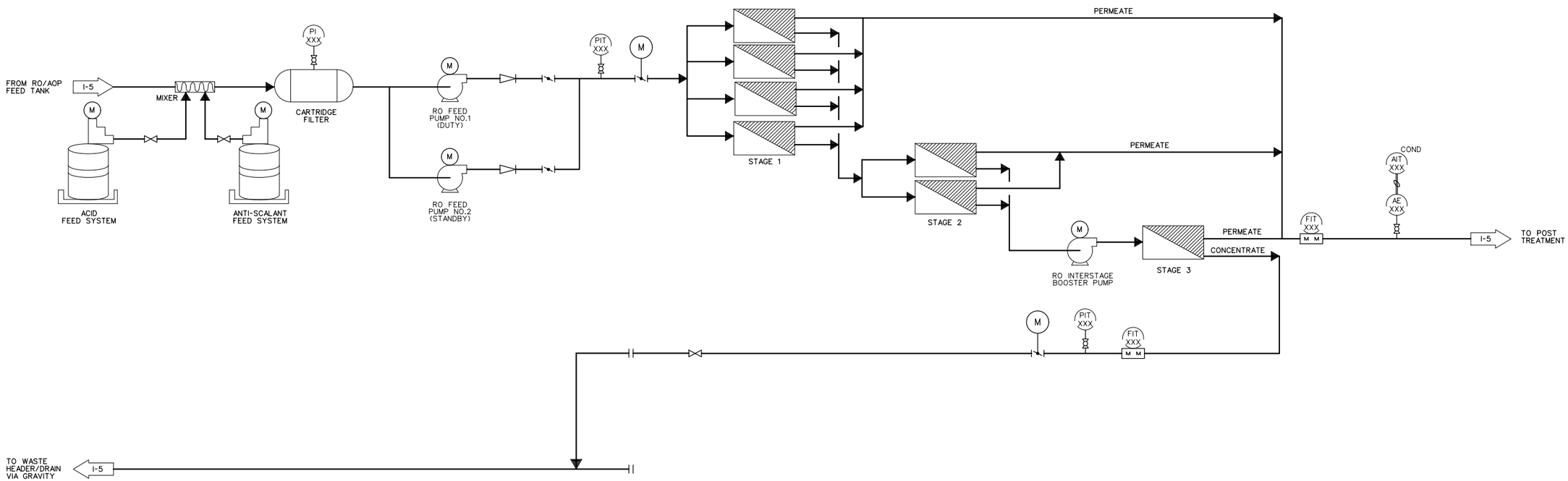

MIAMI-DADE COUNTY
Delivering Excellence Every Day

WATER AND SEWER DEPARTMENT
PROGRAM MANAGEMENT DIVISION
3071 SW 38TH AVENUE MIAMI, FLORIDA 33146-1520
305-665 7471
miamidade.gov

MWH
2655 Le Jeune Rd. Suite 320
Coral Gables, FL 33134
Certificate of Authorization # 6773

BBCWRPP TO1
MIAMI, FLORIDA

PRELIMINARY ENGINEERING REPORT

PROCESS AND INSTRUMENTATION DIAGRAM
RO TRAIN

DRAWING HISTORY

RELEASED FOR	DATE	BY
REVIEW 30%		
REVIEW 70%		
REVIEW 90%		
REVIEW 100%		
PERMIT		

REVISIONS

No.	DESCRIPTION	DATE	BY
△			
△			
△			

APPROVALS

CHIEF PMD: –

SECTION HEAD: –

PROJECT MGR.: –

DESIGNED: SMR	CHECKED: SMR
DRAWN: ABB	FINAL CHECK:

Date:_____

ER No. : –

FILE NAME: BBCWRPP-I-4.dgn

DATE:	SCALE: NTS

SHEET

DWG. No. I-4

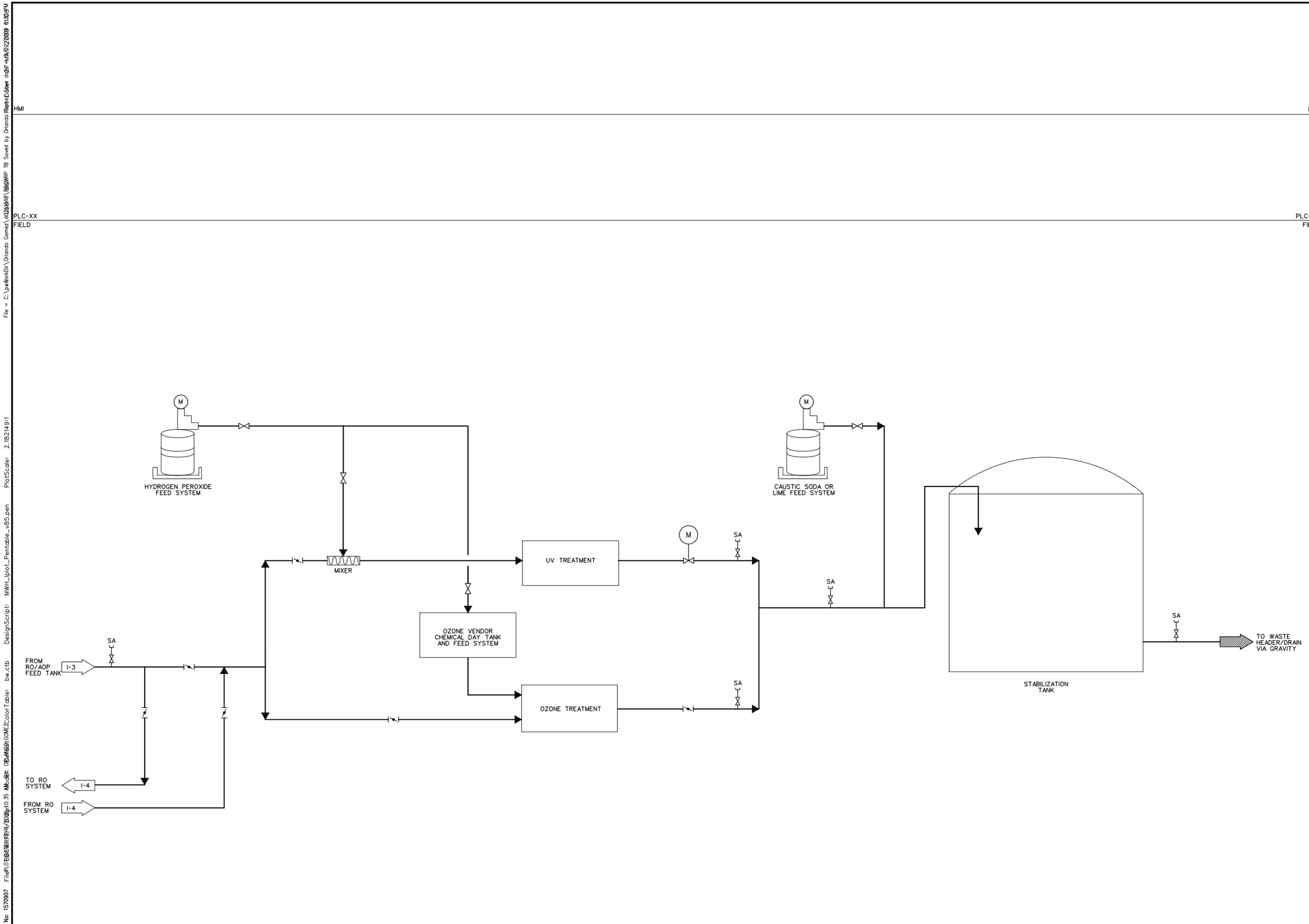

MIAMI-DADE COUNTY
Delivering Excellence Every Day

WATER AND SEWER DEPARTMENT
PROGRAM MANAGEMENT DIVISION
3071 SW 38TH AVENUE MIAMI, FLORIDA 33146-1520
305-665 7471
miamidade.gov

MWH
2655 Le Jeune Rd. Suite 320
Coral Gables, FL 33134
Certificate of Authorization # 6773

BBCWRPP TO1
MIAMI, FLORIDA

PRELIMINARY ENGINEERING REPORT

PROCESS AND INSTRUMENTATION DIAGRAM
POST TREATMENT

DRAWING HISTORY

RELEASED FOR	DATE	BY
REVIEW 30%		
REVIEW 70%		
REVIEW 90%		
REVIEW 100%		
PERMIT		

REVISIONS

No.	DESCRIPTION	DATE	BY
△			
△			
△			

APPROVALS

CHIEF PMD: –
SECTION HEAD: –
PROJECT MGR.: –

DESIGNED: SMR	CHECKED: SMR
DRAWN: ABB	FINAL CHECK:

Date:_____

ER No. : –

FILE NAME: BBCWRPP-I-5.dgn

DATE:	SCALE: NTS

SHEET

DWG. No. I-5

Job No. 1570907 File:P:\OTB\BBCWRPP\BBCWRPP TB Saved by Orlando Rivera-Dobre at 9/22/2009 8:30:39 AM PlotScale: 2.18214 9:1 DesignScript: MWH_Iplot_Pentable_v85.pen File = C:\pwWorkDir\Orlando Correa\d0016145\BBCWRPP TB.dgn ColorTable: bw.ctb

Appendix C
Electrical Single Line Diagram
for Initial Pilot

Appendix C
Electrical Single Line Diagram
for Initial Pilot

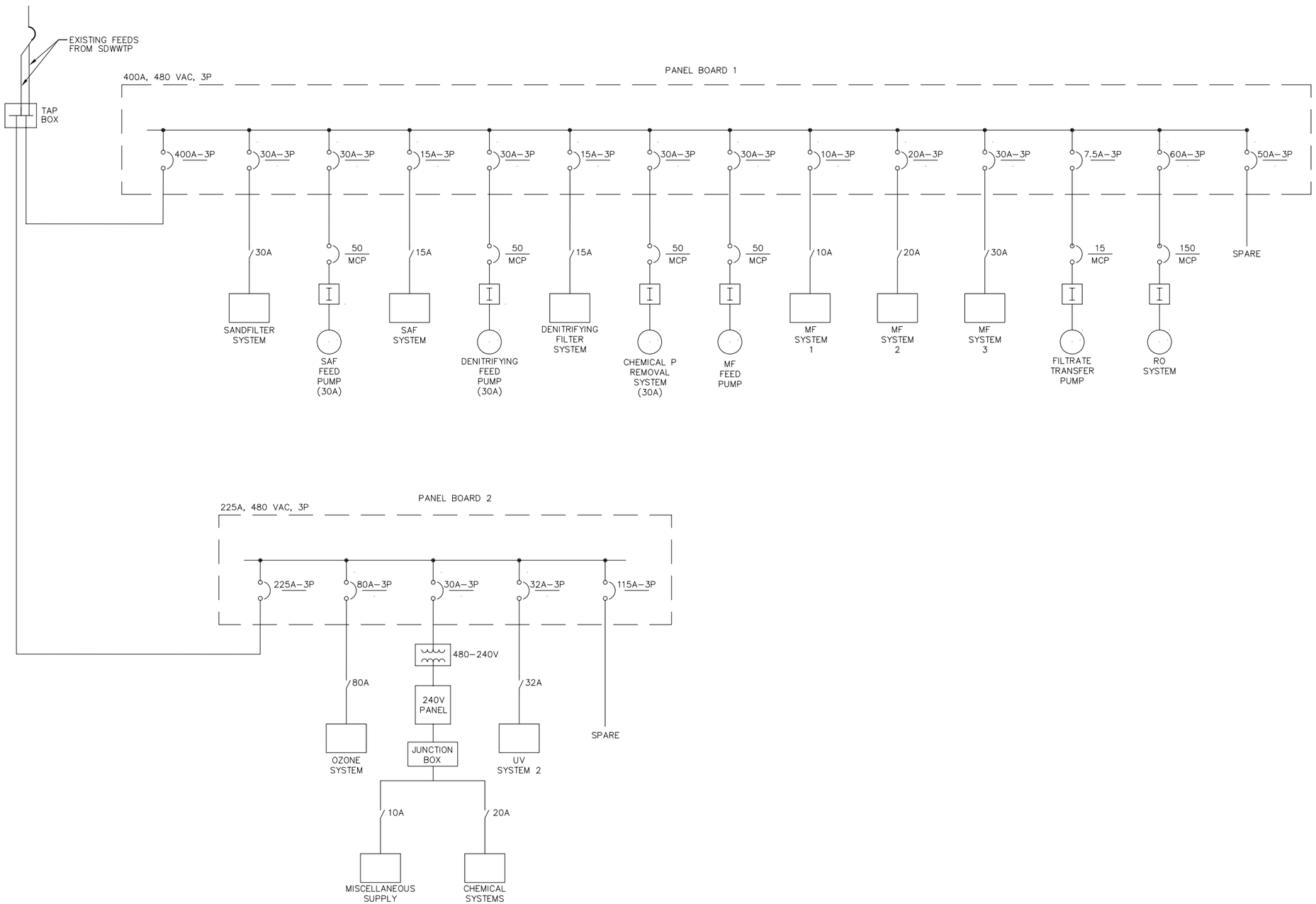

MIAMI-DADE COUNTY
Delivering Excellence Every Day

WATER AND SEWER DEPARTMENT
PROGRAM MANAGEMENT DIVISION
3071 SW 38TH AVENUE
MIAMI, FLORIDA 33146–1520
305–665 7471
miamidade.gov

MWH
2655 Le Jeune Rd. Suite 320
Coral Gables, FL 33134
Certificate of Authorization # 6773

BBCWRPP TO1
MIAMI, FLORIDA
PRELIMINARY ENGINEERING REPORT

SINGLE LINE DIAGRAM

DRAWING HISTORY

RELEASED FOR	DATE	BY
REVIEW 30%		
REVIEW 70%		
REVIEW 90%		
REVIEW 100%		
PERMIT		

REVISIONS

No.	DESCRIPTION	DATE	BY
△			
△			
△			

APPROVALS

CHIEF PMD: –
SECTION HEAD: –
PROJECT MGR.: –
DESIGNED: CHECKED:
DRAWN: FINAL CHECK:

Date:_____

ER No. : –

FILE NAME:

DATE: SCALE:

SHEET

DWG. No.

File = C:\pwWork0\ce598\d0251513\BBCWRPP-E-1 Saved by CER598 Save date = 5/26/2009 3:20 PM

Job No: 1570907 PLOT DATE: 5/26/2009 3:21 PM BY: CER598

Appendix D
Initial Pilot Site Plan

Appendix D
Initial Pilot Site Plan

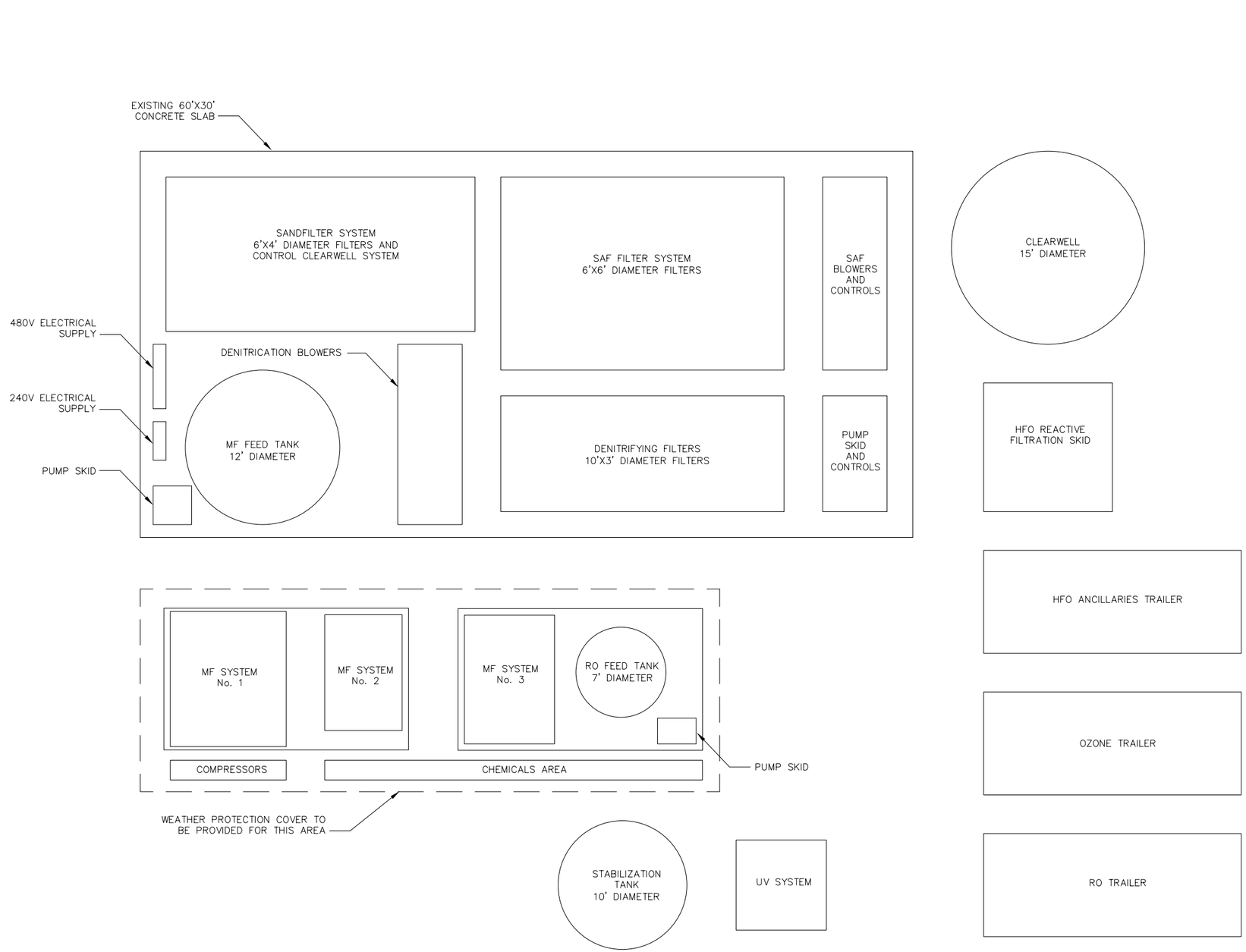

MIAMI-DADE COUNTY
Delivering Excellence Every Day
WATER AND SEWER DEPARTMENT
PROGRAM MANAGEMENT DIVISION
3071 SW 38TH AVENUE
MIAMI, FLORIDA 33146-1520
305-665 7471
miamidade.gov

MWH
2655 Le Jeune Rd. Suite 320
Coral Gables, FL 33134
Certificate of Authorization # 6773

BBCWRPP TO1
MIAMI, FLORIDA
PRELIMINARY ENGINEERING REPORT

TEMPORARY SITE PLAN

DRAWING HISTORY

RELEASED FOR	DATE	BY
REVIEW 30%		
REVIEW 70%		
REVIEW 90%		
REVIEW 100%		
PERMIT		

REVISIONS

No.	DESCRIPTION	DATE	BY
△			
△			
△			

APPROVALS

CHIEF PMD: -
SECTION HEAD: -
PROJECT MGR.: -
DESIGNED: CHECKED:
DRAWN: FINAL CHECK:

Date:_____

ER No. : -
FILE NAME:
DATE: SCALE:
SHEET
DWG. No.

File = C:\pwworkdir\cer598\d0251507\BBCWRPP-C-1 Saved by CER598 Save date = 5/26/2009 12:35 PM
Job No: 1570907 PLOT DATE: 5/26/2009 12:40 PM BY: CER598

Appendix E
Preliminary Drawing List For Initial Pilot Detailed Design

Appendix E
Preliminary Drawing List For Initial Pilot Detailed Design

APPENDIX – E

Preliminary Drawing List
For Initial Pilot Detailed Design

Dwg.	Description
G-1	Cover Sheet and General Notes
G-2	Process Flow Diagram
G-3	Hydraulic Profile
I-1	Process and Instrumentation Diagram 1
I-2	Process and Instrumentation Diagram 2
I-3	Process and Instrumentation Diagram 3
I-4	Process and Instrumentation Diagram 4
C-1	General Site Plan
C-2	Yard piping Plan
C-3	Utilities Plan
M-1	Mechanical Equipment Layout
M-2	Mechanical Pipework Plan
M-3	Mechanical Pipework Sections and Details
E-1	Single Line Diagram
E-2	480V Conduit and Cabling Plan
E-3	240V Conduit and Cabling Plan
E-4	Breaker Connection Plan

Not Included - Miscellaneous Vendor Drawings for all procured major and minor equipment

2655 LeJeune Road, Suite 320,
Coral Gables, FL 33134

BISCAYNE BAY COASTAL WETLANDS REHYDRATION PILOT PROJECT – APPENDICES

MWH

BUILDING A BETTER WORLD