MIAMI-DADE COUNTY

BUILDING CODE COMPLIANCE OFFICE (BCCO)
PRODUCT CONTROL DIVISION

MIAMI-DADE COUNTY, FLORIDA
METRO-DADE FLAGLER BUILDING
140 WEST FLAGLER STREET, SUITE 1603
MIAMI, FLORIDA 33130-1563
(305) 375-2901 FAX (305) 375-2908
www.buildingcodeonline.com

NOTICE OF ACCEPTANCE (NOA)

Traco Windows & Doors, Inc.
71 Progress Avenue
Cranberry Township, PA 16066

SCOPE:

This NOA is being issued under the applicable rules and regulations governing the use of construction materials. The documentation submitted has been reviewed by Miami-Dade County Product Control Division and accepted by the Board of Rules and Appeals (BORA) to be used in Miami Dade County and other areas where allowed by the Authority Having Jurisdiction (AHJ).

This NOA shall not be valid after the expiration date stated below. The Miami-Dade County Product Control Division (In Miami Dade County) and/or the AHJ (in areas other than Miami Dade County) reserve the right to have this product or material tested for quality assurance purposes. If this product or material fails to perform in the accepted manner, the manufacturer will incur the expense of such testing and the AHJ may immediately revoke, modify, or suspend the use of such product or material within their jurisdiction. BORA reserves the right to revoke this acceptance, if it is determined by Miami-Dade County Product Control Division that this product or material fails to meet the requirements of the applicable building code.

This product is approved as described herein, and has been designed to comply with the Florida Building Code, including the High Velocity Hurricane Zone.

DESCRIPTION: Series 2100 Aluminum Single Hung/Casement Dual Action Window

APPROVAL DOCUMENT: Drawing No. **04-113-0005**, titled "Series 2100 Aluminum Single Hung Window Non-Impact Resistant", sheets 1 through 4 of 4, dated 06/25/04 with revision "**3**" on 02/28/06, prepared by Frank L. Bennardo, P.E., Inc., Consulting Engineers, signed and sealed by Frank L. Bennardo, P.E., bearing the Miami-Dade County Product Control Renews stamp with the Notice of Acceptance number and expiration date by the Miami-Dade County Product Control Division.

MISSILE IMPACT RATING: None

LABELING: Each unit shall bear a permanent label with the manufacturer's name or logo, city, state and following statement: "Miami-Dade County Product Control Approved", unless otherwise noted herein.

RENEWAL of this NOA shall be considered after a renewal application has been filed and there has been no change in the applicable building code negatively affecting the performance of this product.

TERMINATION of this NOA will occur after the expiration date or if there has been a revision or change in the materials, use, and/or manufacture of the product or process. Misuse of this NOA as an endorsement of any product, for sales, advertising or any other purposes shall automatically terminate this NOA. Failure to comply with any section of this NOA shall be cause for termination and removal of NOA.

ADVERTISEMENT: The NOA number preceded by the words Miami-Dade County, Florida, and followed by the expiration date may be displayed in advertising literature. If any portion of the NOA is displayed, then it shall be done in its entirety.

INSPECTION: A copy of this entire NOA shall be provided to the user by the manufacturer or its distributors and shall be available for inspection at the job site at the request of the Building Official.

This NOA **revises and renews NOA # 04-0707.03** consists of this page 1 and evidence pages E-1 and E-2, as well as approval document mentioned above.

The submitted documentation was reviewed by **Herminio F. Gonzalez P.E., Director, BCCO**

PRODUCT CONTROL ACCEPTED

JGASON
3/2/06

Traco Security Windows & Doors, Inc.

NOTICE OF ACCEPTANCE: EVIDENCE SUBMITTED

A. DRAWINGS

1. Manufacturer's die drawings and sections.
2. Drawing No. **04-113-0005**, titled "Series 2100 Aluminum Single Hung Window Non-Impact Resistant", sheets 1 through 4 of 4, prepared by Frank L. Bennardo, Inc. Consulting Engineers, dated 06/25/04 with revision **"3"** on 02/28/06, signed and sealed by Frank L. Bennardo, P.E.

B. TESTS

1. Test reports on 1) Air Infiltration Test, per FBC, TAS 202-94
   2) Uniform Static Air Pressure Test, Loading per FBC, TAS 202-94
   3) Water Resistance Test, per FBC, TAS 202-94
   4) Forced Entry Test, per FBC 2411.3.2.1 (b) and TAS 202-94

   along with marked-up drawings and installation diagram of Series 2100 Aluminum Single Hung Window, prepared by Fenestration Testing Laboratory, Test Report No. **FTL-1794**, dated 08/25/97, signed and sealed by Gilbert Diamond, P.E.
   "Submitted under NOA# 04-0707.03"
2. Test reports on 1) Air Infiltration Test, per FBC, TAS 202-94
   2) Uniform Static Air Pressure Test, Loading per FBC, TAS 202-94
   3) Water Resistance Test, per FBC, TAS 202-94

   along with marked-up drawings and installation diagram of Series 2100 Aluminum Single Hung Window, prepared by Farabaugh Engineering and Testing, Inc., Test Report No. **FET-04001**, dated 03/24/04, signed and sealed by Daniel G. Farabaugh, P.E.
   "Submitted under NOA# 04-0707.03"

D. QUALITY ASSURANCE

1. Miami Dade Building Code Compliance Office (BCCO).

C. CALCULATIONS

1. Revised Anchor Calculations and structural analysis, prepared by Frank L. Bennardo, P.E., Inc. Consulting Engineers, dated 08/26/05, signed and sealed by Frank L. Bennardo, P.E.
   Complies with ASTM E 1300-98
   No 1/3 stress increase used in anchors into masonry or steel substrate.

E. MATERIAL CERTIFICATIONS

1. None

for

Herminio F. Gonzalez, P.E
Director, Building Code Compliance Office
NOA No 05-1003.10
Expiration Date: July 30, 2011
Approval Date: March 23, 2006

NOTICE OF ACCEPTANCE: EVIDENCE SUBMITTED

F. STATEMENTS

1. Statement letter of conformance, dated July 02, 2004, signed and sealed by Frank L. Bennardo, P.E.
2. Statement letter of no financial interest July 02, 2004, signed and sealed by Frank L. Bennardo, P.E.

G. OTHER

1. Notice of Acceptance No. **04-0707.03**, issued to Traco Windows & Doors, for "Series 2100 Single Hung Window- Non Impact Resistant, approved on 09/30/04 and expiring 06/30/06.

for.

Herminio F. Gonzalez, P.E
Director, Buidling Code Compliance Office
NOA No 05-1003.10
Expiration Date: July 30, 2011
Approval Date: March 23, 2006

SERIES 2100 ALUMINUM SINGLE HUNG EGRESS WINDOW

(NON-IMPACT RESISTANT)

DESIGN LOAD CAPACITY (PSF)

WINDOW WIDTH (in)	WINDOW HEIGHT (in)	DSB Ann Pos (psf)	DSB Ann Neg (psf)	1/2" Insul Pos (psf)	1/2" Insul Neg (psf)
37.00	38.375	53.3	74.0	53.3	74.0
26.50	50.625	53.3	85.1	53.3	85.1
37.00		53.3	61.0	53.3	61.0

GENERAL NOTES:

1) THE SYSTEM DESCRIBED HEREIN HAS BEEN DESIGNED AND TESTED IN COMPLIANCE WITH THE FLORIDA BUILDING CODE 2004 (INCLUDING HIGH VELOCITY HURRICANE ZONE) AND HVHZ TEST PROTOCOL TAS 202.

2) NO 33-1/3% INCREASE IN ALLOWABLE STRESS HAS BEEN USED IN THE DESIGN OF THIS SYSTEM. WIND LOAD DURATION FACTOR Cd=1.6 HAS BEEN USED FOR WOOD ANCHOR DESIGN.

3) POSITIVE AND NEGATIVE DESIGN PRESSURES CALCULATED FOR USE WITH THIS SYSTEM SHALL BE DETERMINED BY OTHERS ON A JOB-SPECIFIC BASIS IN ACCORDANCE WITH THE GOVERNING CODE.

4) MULTIPLE WINDOW UNITS MUST BE INSTALLED USING MIAMI-DADE COUNTY BCCO-APPROVED STRUCTURAL MULLIONS (e.g. NOA #01-1218.01 OR #01-1218.02).

5) THE WINDOW SYSTEM DETAILED HEREIN IS GENERIC AND DOES NOT PROVIDE INFORMATION FOR A SPECIFIC SITE. FOR SITE CONDITIONS DIFFERENT FROM THE CONDITIONS DETAILED HEREIN, A LICENSED ENGINEER OR REGISTERED ARCHITECT SHALL PREPARE SITE SPECIFIC DOCUMENTS FOR USE IN CONJUNCTION WITH THIS DOCUMENT.

6) PERMIT HOLDER SHALL VERIFY THE ADEQUACY OF THE EXISTING STRUCTURE TO WITHSTAND SUPERIMPOSED LOADS.

7) INSTALLATION OF THIS SYSTEM IN HVHZ AREA REQUIRES THE USE OF A MIAMI-DADE COUNTY APPROVED SHUTTER OR EXTERNAL PROTECTION DEVICE COMPLYING WITH HVHZ REQUIREMENTS. INSTALLATION OF THIS SYSTEM OUTSIDE THE HVHZ SHALL MEET THE APPLICABLE CODE REQUIREMENTS FOR WINDBORNE DEBRIS PROTECTION.

8) ALL STEEL IN CONTACT WITH ALUMINUM SHALL BE PAINTED OR PLATED IN ACCORDANCE WITH THE 2004 FLORIDA BUILDING CODE.

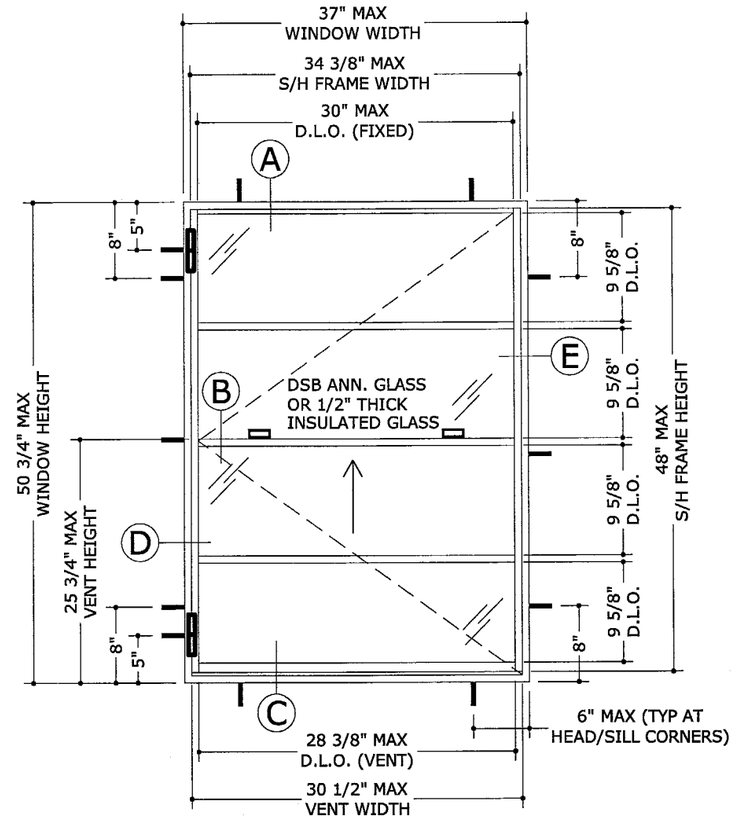

1 / 1 TYPICAL ELEVATION (TESTED UNIT SHOWN)

3/4" = 1'-0" EXTERIOR ELEV

PRODUCT RENEWED
as complying with the Florida Building Code
Acceptance No 05-1003.10
Expiration Date 07/30/11
By
Miami-Dade Product Control Division

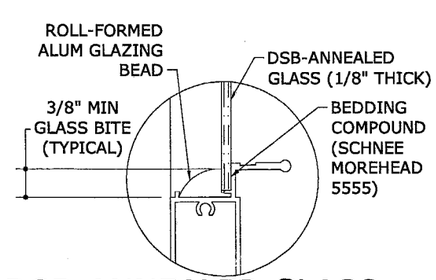

DSB-ANNEALED GLASS

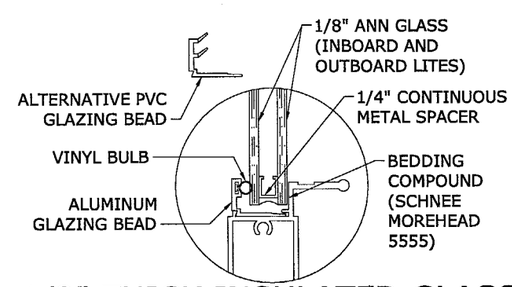

1/2" THICK INSULATED GLASS

2 / 1 GLAZING OPTIONS

6" = 1'-0" VERT SECTIONS

FRANK L. BENNARDO, P.E.
PE0046549
02/28/2006

FRANK L. BENNARDO, P.E., INC.
CONSULTING ENGINEERS
4441 NORTH DIXIE HIGHWAY
BOCA RATON, FL 33431
(561) 391-2888 FAX: (561) 391-2862
WWW.FLBENGINEERING.COM
CERTIFICATE OF AUTHORIZATION: #9885

TRACO
Windows & Doors Inc.
71 Progress Avenue
Cranberry Township, PA 16166
Tel: (724) 776-7000

SERIES 2100 ALUMINUM SINGLE-HUNG EGRESS WINDOW
NON-IMPACT RESISTANT

REMARKS	DRWN	CHKD	DATE
INIT ISSUE	CL	FLB	06/25/04
COUNTY COMMENTS	CL	FLB	08/23/04
2004 FBC REV.	AML	FLB	08/29/05
REVIEW COMMENTS	CL	FLB	2/28/06
-	-	-	-

04-113-0005

PAGE SCALE:

DESCRIPTION:

1 / 4

02/28/2006 - 10:31am clangley F:\01 Project Files\Traco (TRA)\2004 Jobs\04-113-0005 2100 Single-Hung, Egress (Non-Impact)\04-113-0005_01b Traco - 2100 Single-Hung, Egress (Non-Impact).dwg

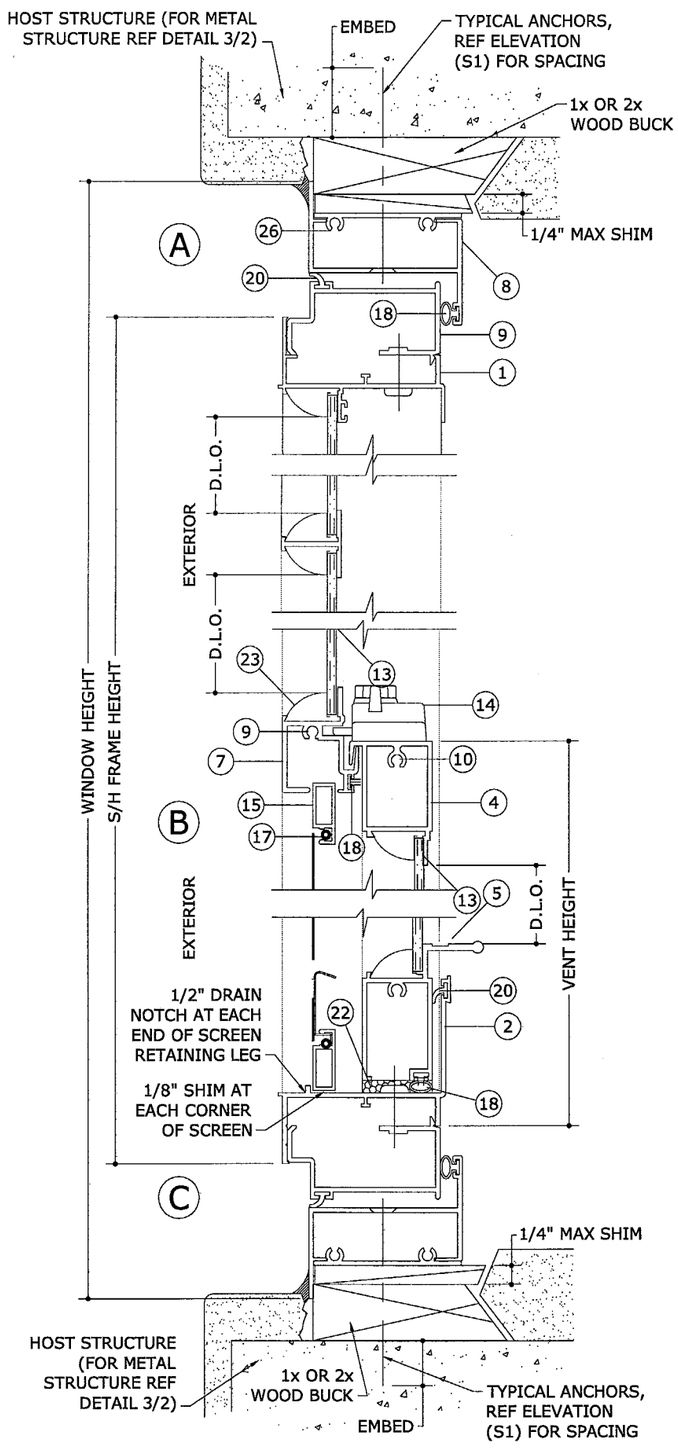

1/2 SINGLE GLAZED SECTION
6" = 1'-0" VERT. SECT.

TYPICAL ANCHORS:

1) 1/4" TAPCONS (BY ELCO OR ITW) OR EQUIV CONCRETE ANCHOR HOLDING CURRENT NOTICE OF ACCEPTANCE:
- INTO 2x WOOD BUCKS OR WOOD STRUCTURE (1-3/8" MIN PENETRATION INTO WOOD)
- THRU 1x WOOD BUCKS INTO MASONRY OR DIRECTLY INTO MASONRY (1-1/4" MIN EMBED INTO CONCRETE OR BLOCK)

2) #14 (0.019" DIAM) GRADE 5 SMS OR SELF-DRILLING SCREWS:
- INTO 1/8" MIN THICK 6063-T5 ALUMINUM OR 36ksi STEEL STRUCTURE (FULL THREAD ENGAGEMENT INTO METAL THICKNESS)

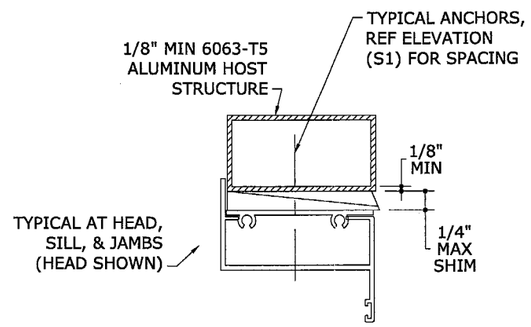

3/2 TYP ANCHORAGE TO METAL STRUCTURE
6" = 1'-0" HORIZ. SECT.

WOOD BUCKS, NOT BY TRACO, MUST SUSTAIN LOADS IMPOSED BY GLAZING SYSTEM AND TRANSFER THEM TO THE BUILDING STRUCTURE.

SEALANT:

ALL FRAME AND VENT CORNERS, & HEADS OF INSTALLATION SCREWS AT SILL TO BE SEALED WITH CLEAR COLORED SEALANT, SCHNEE MOREHEAD 5504.

ANCHOR NOTES:

1) ANCHORS SHALL BE INSTALLED IN ACCORDANCE WITH MANUFACTURERS' RECOMMENDATIONS.
2) HOST STRUCTURE MAY BE CONCRETE, HOLLOW BLOCK, GROUT-FILLED BLOCK, WOOD, MIN. 6063-T5 ALUMINUM ALLOY (1/8" MIN THICKNESS), OR 36ksi STEEL (1/8" MIN THICKNESS). WOOD BUCKS AND/OR WOOD HOST STRUCTURE SHALL BE "SOUTHERN PINE" G=0.55 OR GREATER DENSITY.
3) OPTIONAL WOOD BUCKS (NOT BY THIS MANUFACTURER) SHALL BE ANCHORED PROPERLY TO TRANSFER LOADS TO THE EXISTING STRUCTURE.
4) ANCHORS SHALL BE AS LISTED, SPACED AS SHOWN HEREIN. MINIMUM EDGE DISTANCE AND EMBEDMENT TO BASE STRUCTURE EXCLUDES STUCCO, FOAM, BRICK, AND OTHER WALL FINISHES.
5) WHERE EXISTING STRUCTURE IS WOOD FRAMING, EXISTING CONDITIONS MAY VARY. FIELD VERIFY THAT FASTENERS ARE INTO ADEQUATE WOOD FRAMING MEMBERS.

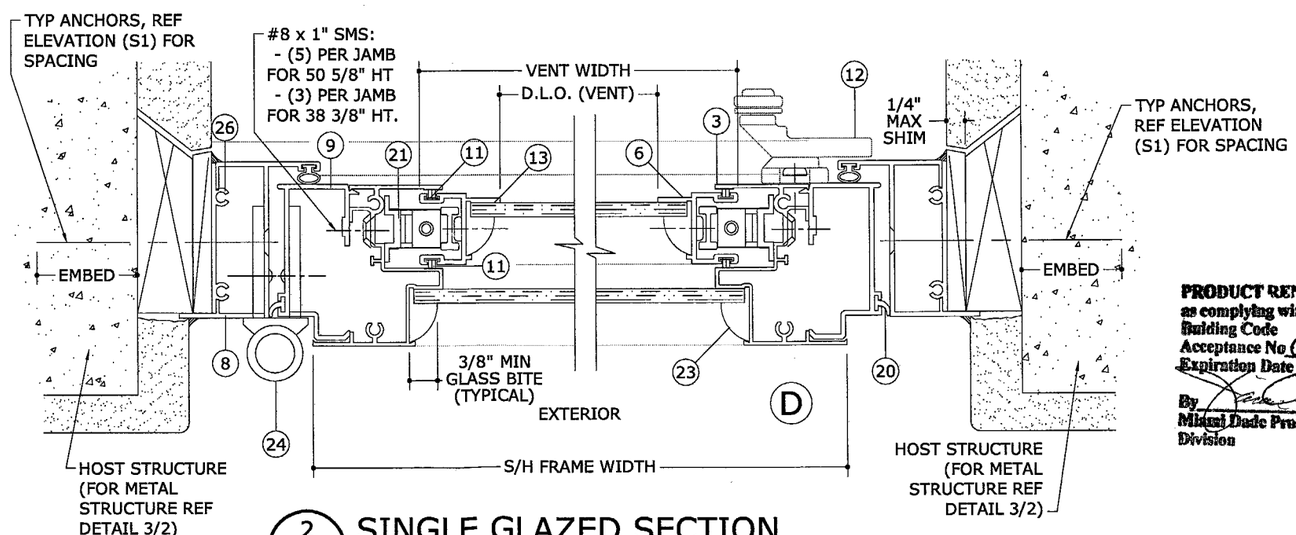

2/2 SINGLE GLAZED SECTION
6" = 1'-0" HORIZ. SECT.

PRODUCT RENEWED
as complying with the Florida Building Code
Acceptance No 05-1003.10
Expiration Date 02/30/11
By
Miami Dade Product Control Division

FRANK L. BENNARDO, P.E.
PE0046549
02/28/2006

FRANK L. BENNARDO, P.E., INC.
CONSULTING ENGINEERS
4441 NORTH DIXIE HIGHWAY
BOCA RATON, FL 33431
(561) 391-2888 FAX: (561) 391-2862
WWW.FLBENGINEERING.COM
CERTIFICATE OF AUTHORIZATION: #9885

TRACO
Windows & Doors Inc.
71 Progress Avenue
Cranberry Township, PA 16166
Tel: (724) 776-7000

SERIES 2100 ALUMINUM SINGLE-HUNG EGRESS WINDOW
NON-IMPACT RESISTANT

REMARKS	DRWN	CHKD	DATE
INIT ISSUE	CL	FLB	06/25/04
COUNTY COMMENTS	CL	FLB	08/23/04
2004 FBC REV.	AML	FLB	08/29/05
REVIEW COMMENTS	CL	FLB	2/28/06
-	-	-	-

04-113-0005
PAGE SCALE:
DESCRIPTION:

2 4

02/28/2006 - 10:31am clangley F:\01 Project Files\Traco (TRA)\2004 Jobs\04-113-0005 2100 Single-Hung, Egress (Non-Impact)\04-113-0005_01b Traco - 2100 Single-Hung, Egress (Non-Impact).dwg

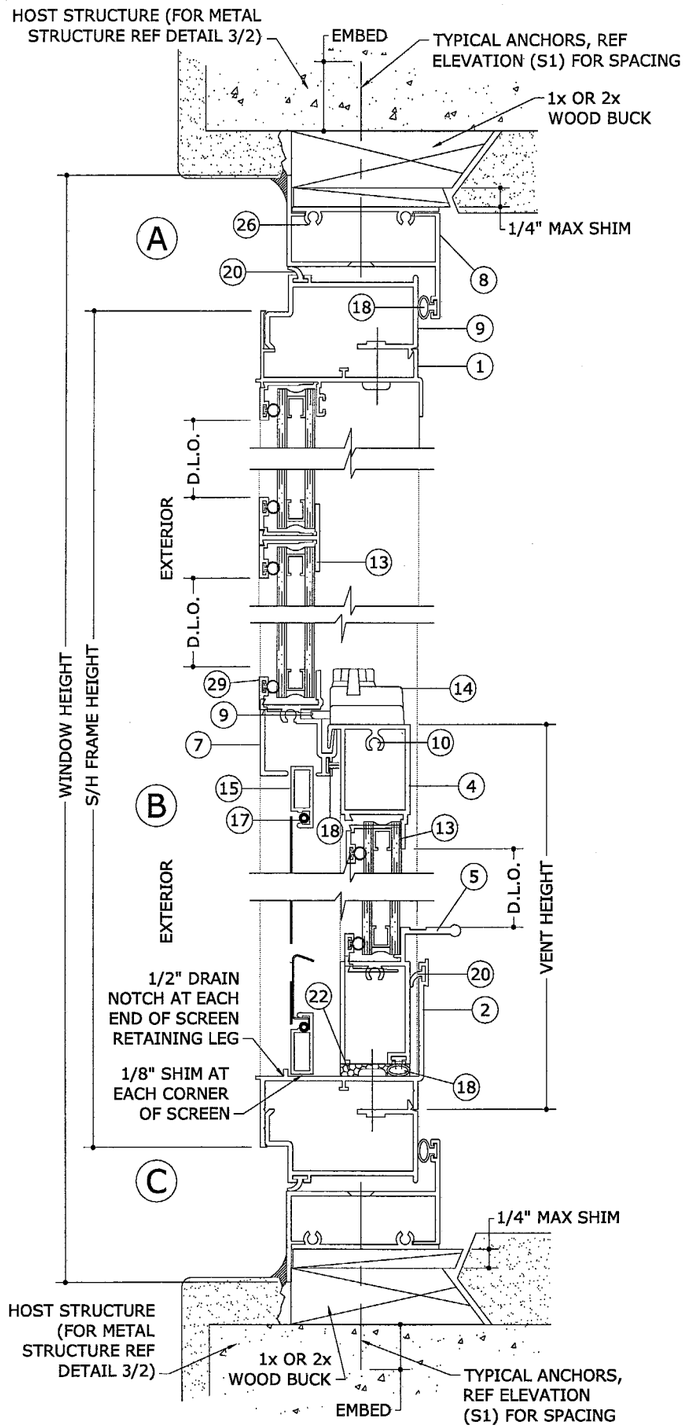

DOUBLE GLAZED SECTION (INSULATED GLAZING)

1/3 — 6" = 1'-0" — VERT SECTION

MATERIALS LIST

ITEM NO.	PART NUMBER	QUANTITY	DESCRIPTION	MATERIAL	MANF./SUPLIER/REMARKS
1	SEG-367	1	HEAD	6063-T6	ALUMAX
2	SEG-375	1	SILL	6063-T6	TIFTON
3	SEG-366	2	JAMB	6063-T6	ALUMAX
4	SEG-164	1	VENT TOP	6063-T6	TIFTON
5	SEG-492	1	VENT BOTTOM	6063-T6	ALUMAX
6	SEG-160	2	VENT SIDE	6063-T6	TIFTON
7	SEG-119	1	MEETING RAIL	6063-T5	TIFTON
8	SEG-363	4	"Z" BAR FRAME	6063-T6	-
9	SEG-343	-	EGRESS HINGE ADAPTER	6063-T6	-
10	012-00-832	AS REQD.	VENT ASSEMBLY SCREW	-	# 8 X 3/4" SMS
11	047-00-008	4	WOOLPILE VENT SIDE	-	AMESBURY
12	2572	2	LEVER TYPE CAM LOCKS W/ SINGLE OPER'G BAR	DIE CAST ZINC	TRUTH, 10-1/2" FROM TOP & BOTTOM
13	050-00-000	AS REQD.	ACRYLIC BASED GLAZING COMPOUND	-	SCHNEE MOREHEAD 5555
14	007-10-016	2	SWEEP LOCK @ 6-3/4" FROM ENDS	ZAMAK	MARBOLLO INTL.
15	004-00-003	AS REQD.	ROLL FORMED SCREEN FRAME	-	OPTIONAL
16	048-00-002	AS REQD.	FIBERGLASS SCREEN MESH	-	-
17	046-16-005	AS REQD.	SCREEN MESH ROLL VINYL	-	-
18	WV-8502	AS REQD.	BULB WEATHERSTRIPPING	VINYL	WIBORG
19	-	-	-	-	-
20	WV-2205	AS REQD.	FLAP WEATHERSTRIPPING	VINYL	WIBORG
21	6000/6100	1/ JAMB	SPRING AND PULLEY BALANCES	-	WINDOW COMPONENTS
22		2	CLOSED CELL FOAM PAD	-	1"X2"X1/4" AT EACH CORNER
23		AS REQD.	ROLL FORMED GLAZING BEAD	-	ALUMINUM
24	SEG-181	2	EGRESS HINGE (4" LONG)	6061-T6	AT 5" FROM TOP & BOTTOM
25	SEG-240	2	TRUE MUNTIN	6063-T6	-
26	SEG-299	1/ ANCHOR	SNAP CANTILEVER (2" LONG)	6063-T5	-
27	046-16-009	2	VINYL BULB	VINYL	-
28	046-00-300	2 (ALT)	PVC GLAZING BEAD	PVC	ALTERNATE TO VINYL BULB
29	050-300	2	ALUM GLAZING BEAD	6063-T5	-

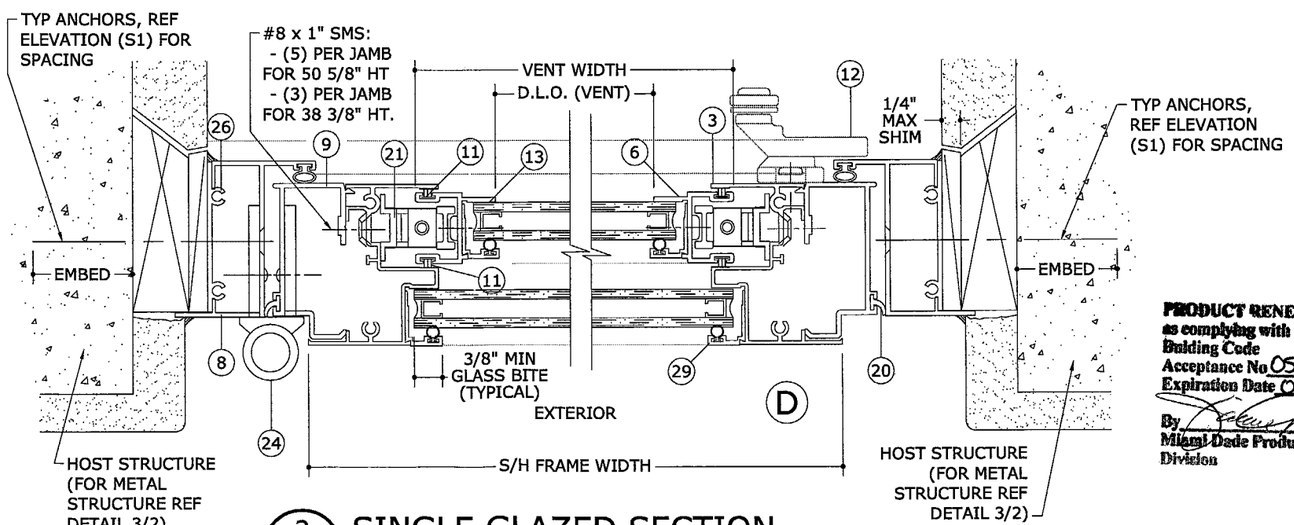

SINGLE GLAZED SECTION

2/3 — 6" = 1'-0" — HORIZ. SECT.

PRODUCT RENEWED
as complying with the Florida Building Code
Acceptance No. 05-1003.10
Expiration Date 07/30/11
By
Miami-Dade Product Control Division

FRANK L. BENNARDO, P.E.
PE0046549
02/28/2006

FRANK L. BENNARDO, P.E., INC.
CONSULTING ENGINEERS
4441 NORTH DIXIE HIGHWAY
BOCA RATON, FL 33431
(561) 391-2888 FAX: (561) 391-2862
WWW.FLBENGINEERING.COM
CERTIFICATE OF AUTHORIZATION: #9885

TRACO
Windows & Doors Inc.
71 Progress Avenue
Cranberry Township, PA 16166
Tel: (724) 776-7000

SERIES 2100 ALUMINUM SINGLE-HUNG EGRESS WINDOW
NON-IMPACT RESISTANT

REMARKS	DRWN	CHKD	DATE
INIT ISSUE	CL	FLB	06/25/04
COUNTY COMMENTS	CL	FLB	08/23/04
2004 FBC REV.	AML	FLB	08/29/05
REVIEW COMMENTS	CL	FLB	2/28/06

04-113-0005

PAGE SCALE:
DESCRIPTION:

3 — 4

02/28/2006 - 10:31am dlangley F:\01 Project Files\Traco (TRA)\2004 Jobs\04-113-0005 2100 Single-Hung, Egress (Non-Impact)\04-113-0005_01b Traco - 2100 Single-Hung, Egress (Non-Impact).dwg

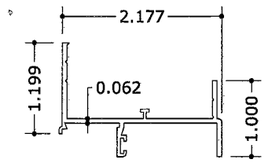

1 FRAME HEAD

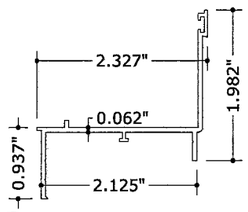

2 FRAME SILL

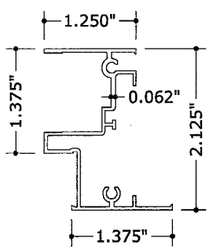

3 FRAME JAMB

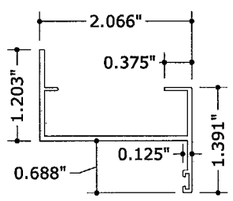

8 'Z' BAR FRAME

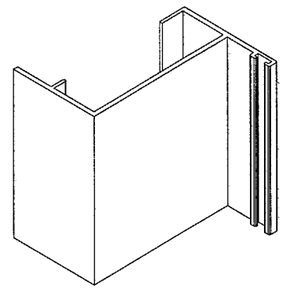

EGRESS FRAME CORNER

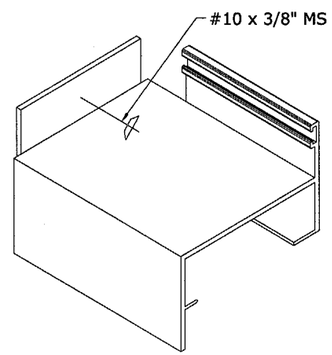

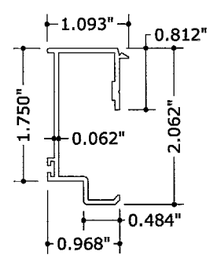

9 EGRESS HINGE ADAPTER

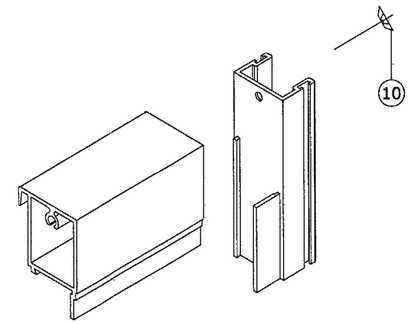

VENT TOP CORNER

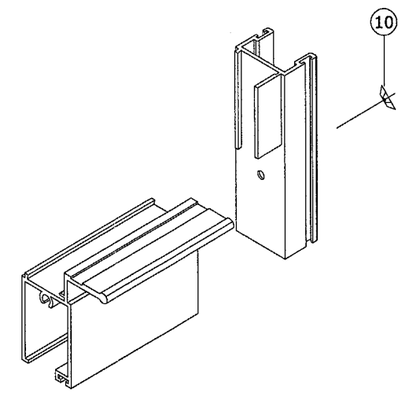

VENT BOTTOM CORNER

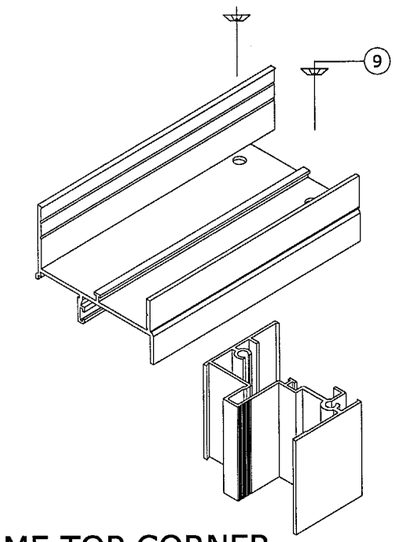

FRAME TOP CORNER

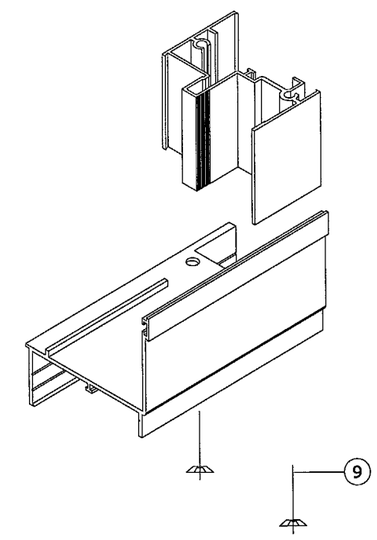

FRAME BOTTOM CORNER

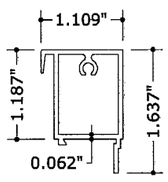

4 VENT TOP RAIL

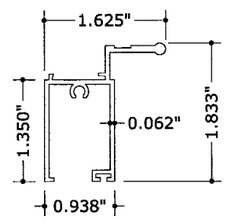

5 VENT BOTTOM RAIL

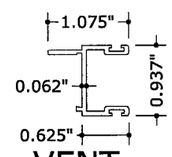

6 VENT SIDE RAIL

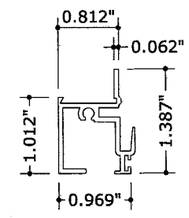

7 MEETING RAIL

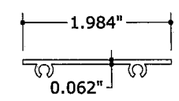

26 SNAP CLIP

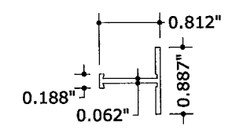

25 MUNTIN

PRODUCT RENEWED
as complying with the Florida Building Code
Acceptance No 05-1003.10
Expiration Date 07/30/11
By [illegible]
Miami-Dade Product Control Division

FRANK L. BENNARDO, P.E.
PE0046549
02/28/2006

FRANK L. BENNARDO, P.E., INC.
CONSULTING ENGINEERS
4441 NORTH DIXIE HIGHWAY
BOCA RATON, FL 33431
(561) 391-2888 FAX: (561) 391-2862
WWW.FLBENGINEERING.COM
CERTIFICATE OF AUTHORIZATION: #9885

TRACO
Windows & Doors Inc.
71 Progress Avenue
Cranberry Township, PA 16166
Tel: (724) 776-7000

SERIES 2100 ALUMINUM SINGLE-HUNG EGRESS WINDOW
NON-IMPACT RESISTANT

REMARKS	DRWN	CHKD	DATE
INIT ISSUE	CL	FLB	06/25/04
COUNTY COMMENTS	CL	FLB	08/23/04
2004 FBC REV.	AML	FLB	08/29/05
REVIEW COMMENTS	CL	FLB	2/28/06
-	-	-	-

04-113-0005
PAGE SCALE:
DESCRIPTION:

4

02/28/2006 - 10:31am clangley F:\01 Project Files\Traco (TRA)\2004 Jobs\04-113-0005 2100 Single-Hung, Egress (Non-Impact)\04-113-0005_01b Traco - 2100 Single-Hung, Egress (Non-Impact).dwg