MIAMI-DADE COUNTY
BUILDING CODE COMPLIANCE OFFICE (BCCO)
PRODUCT CONTROL DIVISION

MIAMI–DADE COUNTY, FLORIDA
METRO–DADE FLAGLER BUILDING
140 WEST FLAGLER STREET, SUITE 1107
MIAMI, FLORIDA 33130–1563
(305) 375–2902 FAX (305) 372–6339
www.maimidade.gov/buildingcode

NOTICE OF ACCEPTANCE (NOA)

Sunshine Windows Manufacturing, Inc.
1745 West 33rd Place
Hialeah, FL 33012

SCOPE:

This NOA is being issued under the applicable rules and regulations governing the use of construction materials. The documentation submitted has been reviewed by Miami–Dade County Product Control Division and accepted by the Board of Rules and Appeals (BORA) to be used in Miami–Dade County and other areas where allowed by the Authority Having Jurisdiction (AHJ).

This NOA shall not be valid after the expiration date stated below. The Miami–Dade County Product Control Division (In Miami–Dade County) and/or the AHJ (in areas other than Miami–Dade County) reserve the right to have this product or material tested for quality assurance purposes. If this product or material fails to perform in the accepted manner, the manufacturer will incur the expense of such testing and the AHJ may immediately revoke, modify, or suspend the use of such product or material within their jurisdiction. BORA reserves the right to revoke this acceptance, if it is determined by Miami–Dade County Product Control Division that this product or material fails to meet the requirements of the applicable building code.

This product is approved as described herein, and has been designed to comply with the Florida Building Code, including the High Velocity Hurricane Zone.

DESCRIPTION: Series 2000 Aluminum Single Hung Window – L.M.I.

APPROVAL DOCUMENT: Drawing No. **SH08–01**, titled "Series 2000 Aluminum Single Hung Impact Resistant Window", sheets 1 through 6 of 6, dated 04/02/08, revised and dated 03/04/10, prepared by manufacturer, signed and sealed by Francisco Hernandez, P. E., bearing the Miami–Dade County Product Control Revision stamp with the Notice of Acceptance number and Expiration date by the Miami–Dade County Product Control Division.

MISSILE IMPACT RATING: Large and Small Missile Impact Resistant

LABELING: Each unit shall bear a permanent label with the manufacturer's name or logo, city, state and following statement: "Miami–Dade County Product Control Approved", unless otherwise noted herein.

RENEWAL of this NOA shall be considered after a renewal application has been filed and there has been no change in the applicable building code negatively affecting the performance of this product.

TERMINATION of this NOA will occur after the expiration date or if there has been a revision or change in the materials, use, and/or manufacture of the product or process. Misuse of this NOA as an endorsement of any product, for sales, advertising or any other purposes shall automatically terminate this NOA. Failure to comply with any section of this NOA shall be cause for termination and removal of NOA.

ADVERTISEMENT: The NOA number preceded by the words Miami–Dade County, Florida, and followed by the expiration date may be displayed in advertising literature. If any portion of the NOA is displayed, then it shall be done in its entirety.

INSPECTION: A copy of this entire NOA shall be provided to the user by the manufacturer or its distributors and shall be available for inspection at the job site at the request of the Building Official.

This NOA **revises NOA No. 08–0219.03** and consists of this page 1 and evidence pages E–1 and E–2, as well as approval document mentioned above.

The submitted documentation was reviewed by **Jaime D. Gascon, P. E.**

MIAMI-DADE COUNTY APPROVED

J. Gascon
3/3/10

Sunshine Windows Manufacturing, Inc.

NOTICE OF ACCEPTANCE: EVIDENCE SUBMITTED

A. DRAWINGS

1. Manufacturer's die drawings and sections.
2. Drawing No **SH08–01**, Sheets 1 through 6 of 6, titled "Series 2000 Aluminum Single Hung Impact Resistant Window", dated 04/02/08, revised and dated 03/04/10, prepared by manufacturer, signed and sealed by Francisco Hernandez, P. E.

B. TESTS

1. Test reports on: 1) Air Infiltration Test, per FBC, TAS 202–94
   2) Uniform Static Air Pressure Test, Loading per FBC TAS 202–94
   3) Water Resistance Test, per FBC, TAS 202–94
   4) Large Missile Impact Test per FBC, TAS 201–94
   5) Cyclic Wind Pressure Loading per FBC, TAS 203–94
   6) Forced Entry Test, per FBC 2411 3.2.1, TAS 202–94

   along with marked–up drawings and installation diagram of series 2000 aluminum single hung window, prepared by Fenestration Testing Laboratory, Inc., Test Report No. **FTL–5253**, dated 10/02/07, signed and sealed by Carlos S. Rionda, P. E.
   (Submitted under previous NOA No.08–0219.03)
2. Test reports on: 1) Air Infiltration Test, per FBC, TAS 202–94
   2) Uniform Static Air Pressure Test, Loading per FBC TAS 202–94
   3) Water Resistance Test, per FBC, TAS 202–94
   4) Large Missile Impact Test per FBC, TAS 201–94
   5) Cyclic Wind Pressure Loading per FBC, TAS 203–94
   6) Forced Entry Test, per FBC 2411 3.2.1, TAS 202–94

   along with marked–up drawings and installation diagram of series 2000 aluminum single hung window, prepared by Fenestration Testing Laboratory, Inc., Test Report No. **FTL–5252**, dated 08/17/07, signed and sealed by Carlos S. Rionda, P. E.
   (Submitted under previous NOA No.08–0219.03)

C. CALCULATIONS

1. Anchor verification calculations and structural analysis, complying with FBC–2004 and FBC–2007, prepared by manufacturer, dated 12/22/07, signed and sealed by Francisco Hernandez, P. E.
   Complies with ASTM E1300–02
   (Submitted under previous NOA No.08–0219.03)

D. QUALITY ASSURANCE

1. Miami–Dade Building Code Compliance Office (BCCO).

Jaime D. Gascon, P. E.
Chief, Product Control Division
NOA No. 09–1217.05
Expiration Date: April 24, 2013
Approval Date: March 24, 2010

NOTICE OF ACCEPTANCE: EVIDENCE SUBMITTED

E. MATERIAL CERTIFICATIONS

1. Notice of Acceptance No. **09–0312.02** issued to E. I. DuPont DeNemours & Co., Inc. for their "**DuPont Butacite® PVB, Interlayer**" dated 05/13/09, expiring on 12/11/10.

F. STATEMENTS

1. Statement letter of conformance, dated December 08, 2009, signed and sealed by Francisco Hernandez, P. E.
2. Statement letter of no financial interest, dated February 6, 2008, signed and sealed by Francisco Hernandez, P. E.
   (Submitted under previous NOA No.08–0219.03)
3. Laboratory compliance letter for Test Report No. **FTL–5252** issued by Fenestration Testing Laboratory, Inc., dated 08/28/07, signed and sealed by Carlos S. Rionda, P. E.
   (Submitted under previous NOA No.08–0219.03)
4. Laboratory compliance letter for Test Report No. **FTL–5253** issued by Fenestration Testing Laboratory, Inc., dated 10/10/07, signed and sealed by Carlos S. Rionda, P. E.
   (Submitted under previous NOA No.08–0219.03)

G. OTHERS

1. Notice of Acceptance No. **08–0219.03**, issued to Sunshine Windows Manufacturing, Inc. for their Series "**2000 Aluminum Single Hung Window – L.M.I.**", approved on 04/24/08 and expiring on 04/24/13.

Jaime D. Gascon, P. E.
Chief, Product Control Division
NOA No. 09–1217.05
Expiration Date: April 24, 2013
Approval Date: March 24, 2010

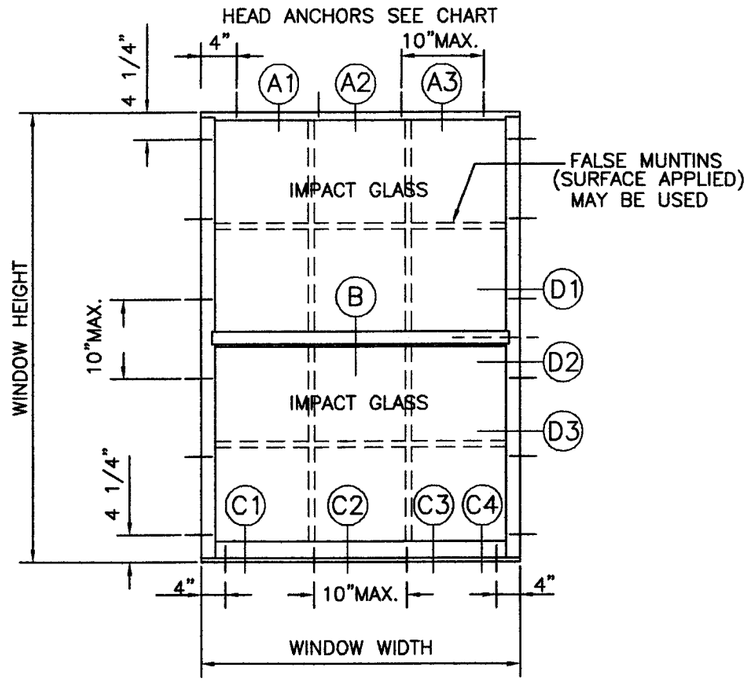

TIPICAL ELEVATION 1 OVER 1

GENERAL NOTES:

1.– FOR NUMBER OF ANCHORS FOR EACH UNIT SIZE REFER TO DESIGN PRESSURE CHART.

2.– REFERENCES: TEST REPORTS FTL–5252 AND FTL–5253.

3.– THIS PRODUCT MEETS THE REQUIREMENTS OF THE 2007 FLORIDA BUILDING CODE.

4.–FASTENERS MUST BE MADE OF STAINLESS STEEL OR HAVE ADEQUATE PROTECTION AGAINST CORROSION AS PER DIN 50018. ALUMINUM CONTACTING METALS SHALL BE PROPERLY PROTECTED.

MIAMI- DADE IMPACT RESISTANT SHUTTERS ARE NOT REQUIRED

DESIGN PRESSURE CHART - PSF

SERIES-2000 ALUMINUM
SINGLE HUNG IMPACT RESISTANT WINDOW

WINDOW DIMENSION		ANCHOR SCHEDULE		DISIGN PRESSURE-PSF	
WIDTH	HEIGHT	PER HEAD AND SILL	PER JAMB	EXT.	INT.
19 1/8"	26"	3	3	90.0	90.0
26 1/2"		3		90.0	90.0
37"		4		90.0	90.0
53 1/8"		6		75.0	75.0
19 1/8"	38 3/8"	3	4	90.0	90.0
26 1/2"		3		90.0	90.0
37"		4		90.0	90.0
53 1/8"		6		75.0	75.0
19 1/8"	50 5/8"	3	6	90.0	90.0
26 1/2"		3		90.0	90.0
37"		4		90.0	90.0
53 1/8"		6		75.0	75.0
19 1/8"	63"	3	7	75.0	75.0
26 1/2"		3		75.0	75.0
37"		4		75.0	75.0
53 1/8"		6		75.0	75.0
19 1/8"	74 1/4"	3	8	75.0	75.0
26 1/2"		3		75.0	75.0
37"		4		75.0	75.0
53 1/8"		6		75.0	75.0

PRODUCT REVISED
as complying with the Florida
Building Code
Acceptance No 09-1217.05
Expiration Date 04/24/2013
By
Miami Dade Product Control
Division

12-8-09

FRANCISCO HERNANDEZ
FLORIDA PE # 51393

Sunshine Windows
Manufacturing, Inc.
1745 W. 33rd Place
Hialeah, Florida 33012
Ph: (305)364-9952
Fax:(305)828-5118

SERIES 2000 ALUMINUM
SINGLE HUNG IMPACT RESISTANT WINDOW

Drawn By: RF
Date: 04-02-08
Scale: 1/2"=1'
Revision: 12-8-09
Revision:

DRAWING NO.
SH08-01

SHEET
1 OF 6

IMPACT RESISTANT WINDOW

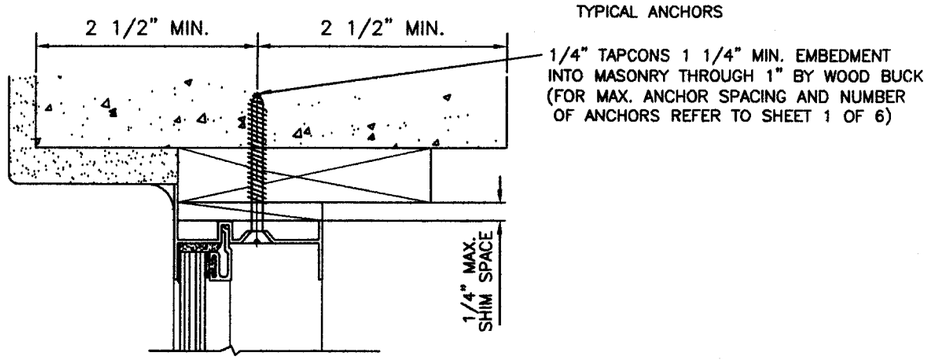

DETAIL A1
ATTACHMENT TO MASONRY

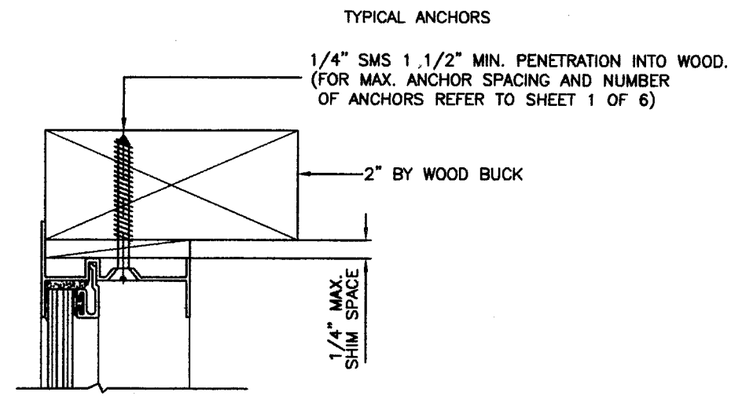

DETAIL A2
ATTACHMENT TO WOOD

GLAZING DETAIL

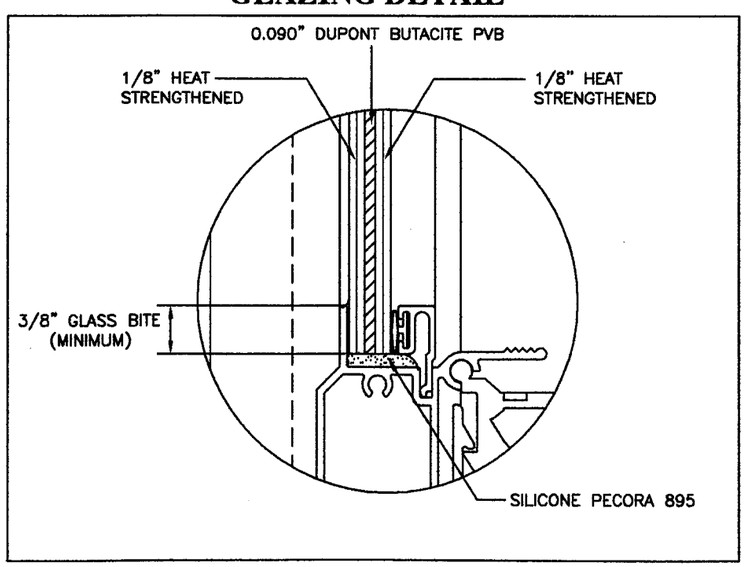

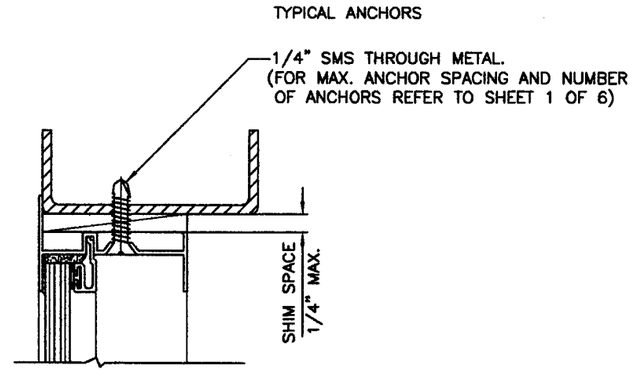

DETAIL A3
ATTACHMENT TO METAL STRUCTURE DETAIL
(STEEL OR ALUMINUM 1/8" MIN. THICKNESS)

TYPICAL HEAD SECTIONS

IMPACT RESISTANT WINDOW

PRODUCT REVISED
as complying with the Florida Building Code
Acceptance No 09-1217.05
Expiration Date 04/24/2013
By
Miami Dade Product Control Division

12-8-09

FRANCISCO HERNANDEZ
FLORIDA PE # 51393

Sunshine Windows Manufacturing, Inc.
1745 W. 33rd Place
Hialeah, Florida 33012
Ph: (305)364-9952
Fax:(305)828-5118

SERIES 2000 ALUMINUM SINGLE HUNG IMPACT RESISTANT WINDOW

Drawn By: RF
Date: 04-02-08
Scale: 1/2"=1'
Revision: 12-8-09
Revision:

DRAWING NO. SH08-04

SHEET 2 OF 6

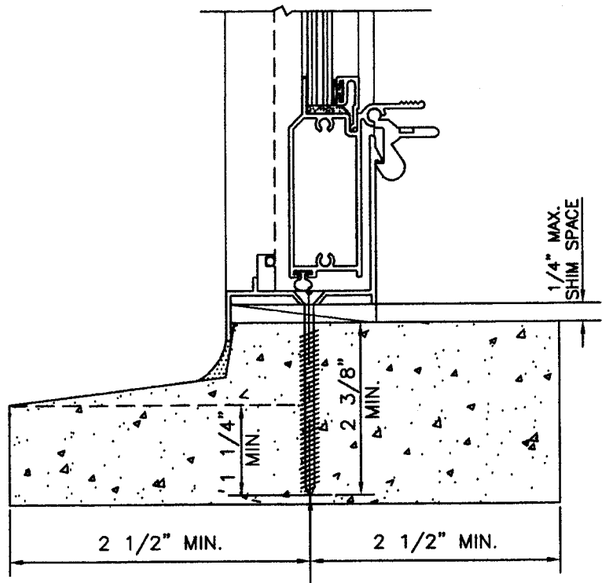

TYPICAL ANCHORS
1/4" TAPCONS 1 1/4" MIN. EMBEDMENT INTO MASONRY
(FOR MAX. ANCHOR SPACING AND NUMBER OF ANCHORS REFER TO SHEET 1 OF 6)

DETAIL C1
ATTACHMENT TO PRE-CAST SILL

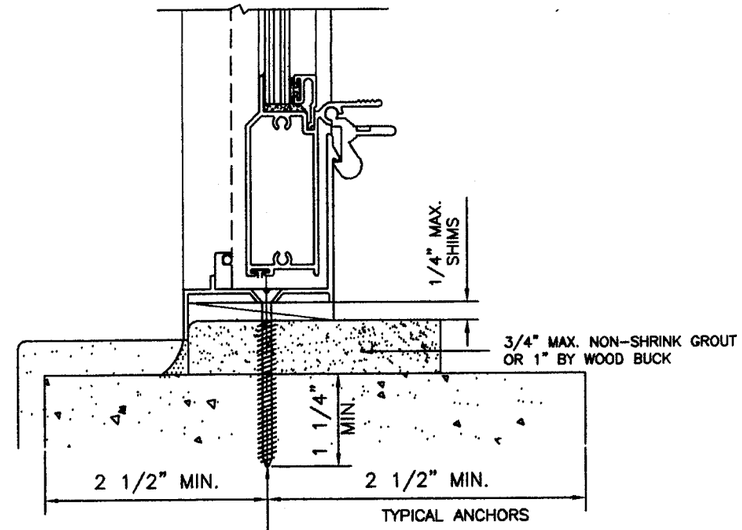

TYPICAL ANCHORS
1/4" TAPCONS 1 1/4" MIN. EMBEDMENT INTO MASONRY THROUGH 1" BY WOOD BUCK OR NON SHRINK NON METALLIC GROUT
(FOR MAX. ANCHOR SPACING AND NUMBER OF ANCHORS REFER TO SHEET 1 OF 6)

DETAIL C2
ATTACHMENT TO MASONRY

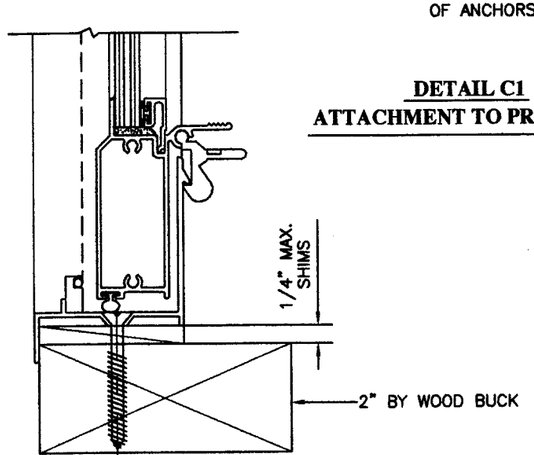

TYPICAL ANCHORS
1/4" SMS 1 1/2" MIN. PENETRATION INTO WOOD.
(FOR MAX. ANCHOR SPACING AND NUMBER OF ANCHORS REFER TO SHEET 1 OF 6)

DETAIL C3
ATTACHMENT TO WOOD

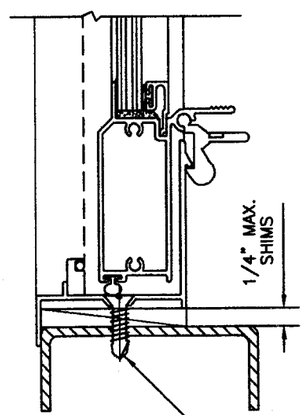

TYPICAL ANCHORS
1/4" SMS THROUGH METAL.
(FOR MAX. ANCHOR SPACING AND NUMBER OF ANCHORS REFER TO SHEET 1 OF 6)

DETAIL C4
ATTACHMENT TO METAL STRUCTURE
(STEEL OR ALUMINUM 1/8" MIN. THICKNESS)

TYPICAL SILL SECTIONS

IMPACT RESISTANT WINDOW

PRODUCT REVISED
as complying with the Florida
Building Code
Acceptance No 09-1217.05
Expiration Date 04/24/2013
By
Miami Dade Product Control
Division

12-8-09

FRANCISCO HERNANDEZ
FLORIDA PE # 51393

Sunshine Windows
Manufacturing, Inc.
1745 W. 33rd Place
Hialeah, Florida 33012
Ph: (305)364-9952
Fax:(305)828-5118

SERIES 2000 ALUMINUM
SINGLE HUNG IMPACT RESISTANT WINDOW

Drawn By: RF
Date: 04-02-08
Scale: 1/2"=1'
Revision: 12-8-09
Revision:

DRAWING NO.
SH08-05

SHEET
3 OF 6

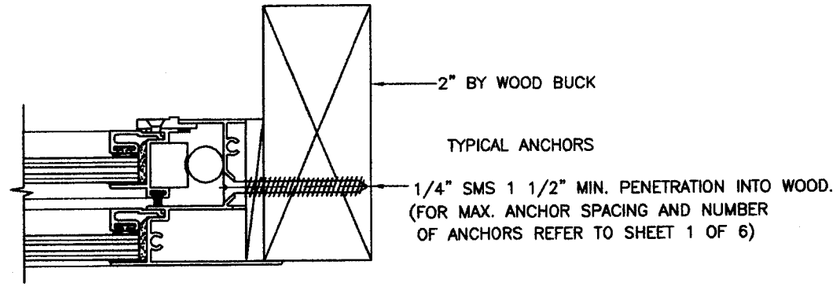

DETAIL D2
ATTACHMENT TO WOOD

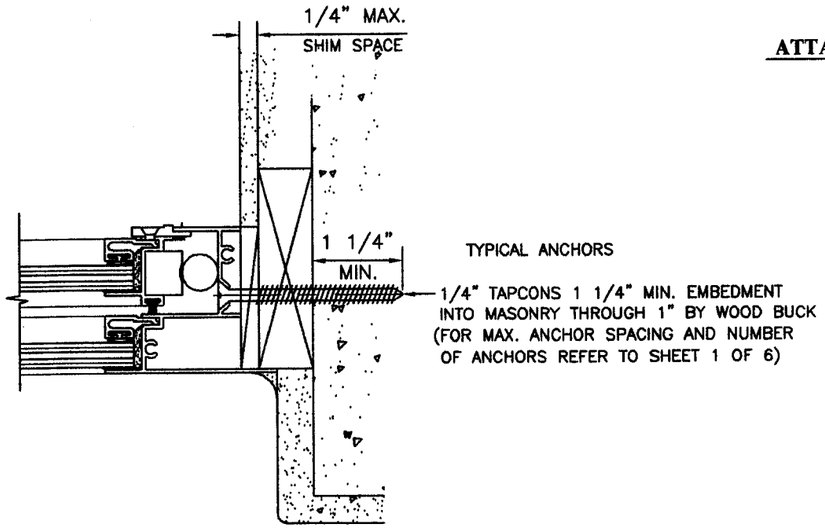

DETAIL D1
ATTACHMENT TO MASONRY

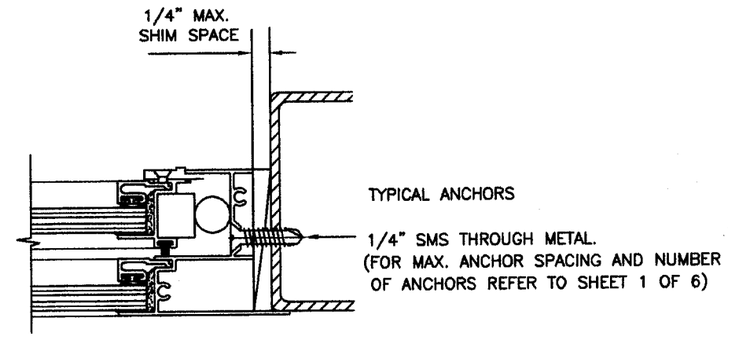

DETAIL D3
ATTACHMENT TO METAL STRUCTURE
(STEEL OR ALUMINUM 1/8" MIN. THICKNESS)

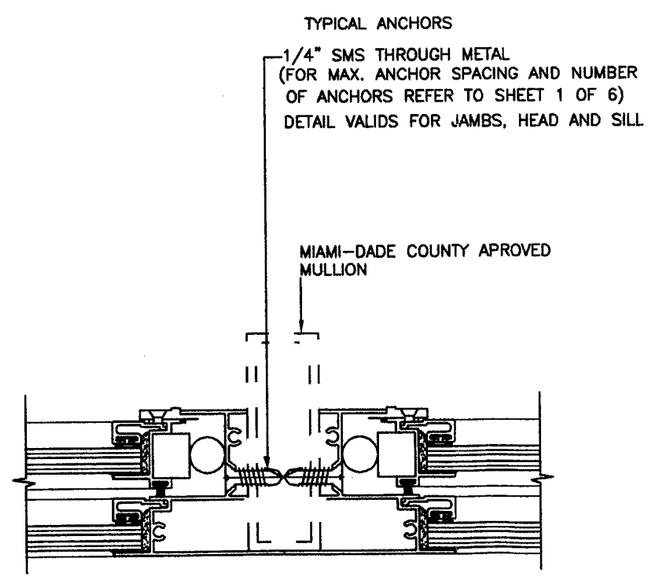

ATTACHMENT TO MULLION DETAIL

TYPICAL JAMB SECTIONS

IMPACT RESISTANT WINDOW

Sunshine Windows Manufacturing, Inc.
1745 W. 33rd Place
Hialeah, Florida 33012
Ph: (305)364-9952
Fax:(305)828-5118

SERIES 2000 ALUMINUM SINGLE HUNG IMPACT RESISTANT WINDOW

PRODUCT REVISED
as complying with the Florida
Building Code
Acceptance No 09-1217.05
Expiration Date 04/24/2013
By
Miami Dade Product Control
Division

12-8-09
FRANCISCO HERNANDEZ
FLORIDA PE # 51393

Drawn By: RF
Date: 04-02-08
Scale: 1/2"=1'
Revision: 12-8-09
Revision:

DRAWING NO.
SH08-06

SHEET
4 OF 6

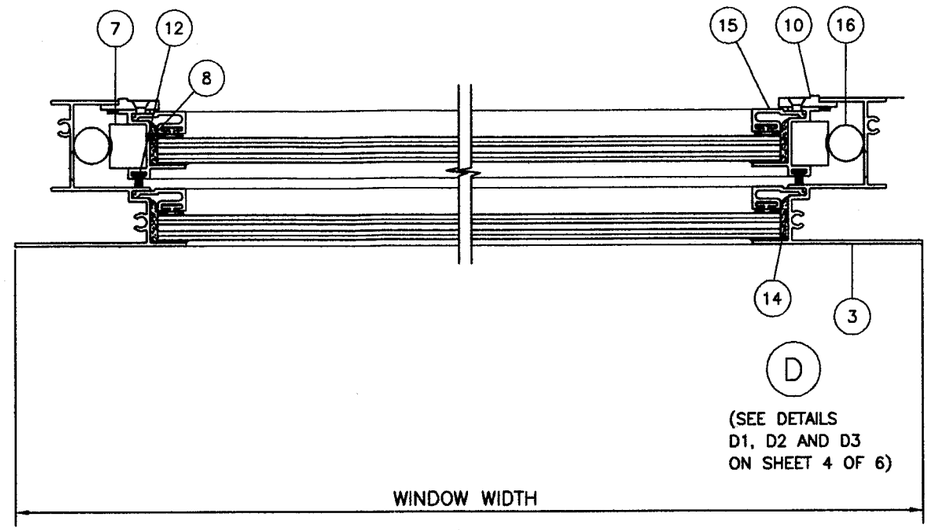

HORIZONTAL SECTION

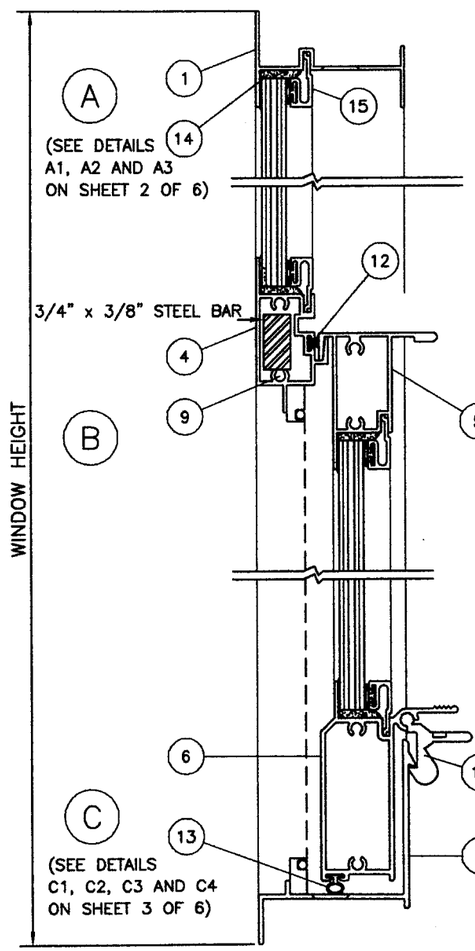

VERTICAL SECTION

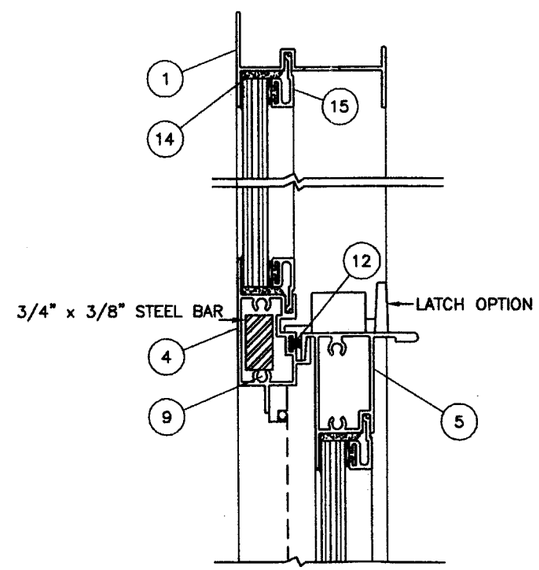

VERTICAL SECTION WITH TOP LOCK

IMPACT RESISTANT WINDOW

PRODUCT REVISED
as complying with the Florida
Building Code
Acceptance No 09-1217.05
Expiration Date 04/24/2013
By
Miami Dade Product Control
Division

12-8-09
FRANCISCO HERNANDEZ
FLORIDA PE # 51393

Sunshine Windows
Manufacturing, Inc.
1745 W. 33rd Place
Hialeah, Florida 33012
Ph: (305)364-9952
Fax:(305)828-5118

SERIES 2000 ALUMINUM
SINGLE HUNG IMPACT RESISTANT WINDOW

Drawn By: RF
Date: 04-02-08
Scale: 1/2"=1'
Revision: 12-8-09
Revision:

DRAWING NO.
SH08-02

SHEET
5 OF 6

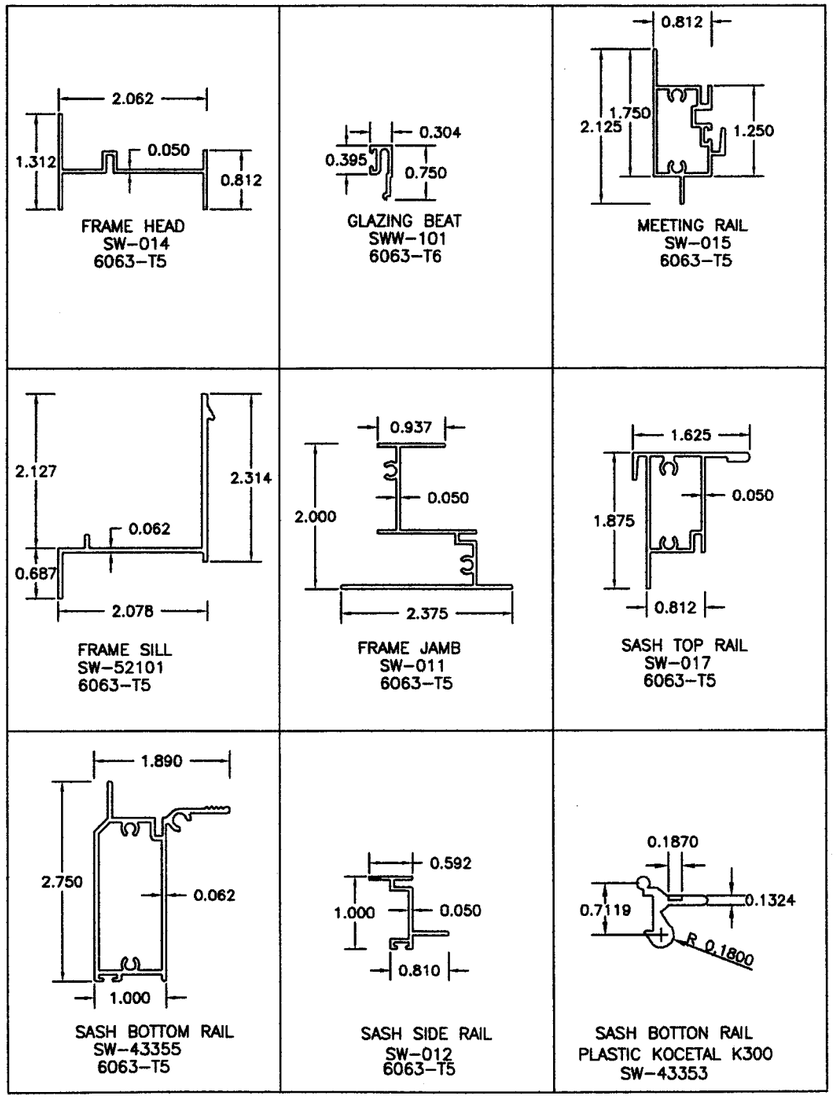

MATERIAL LIST

ITEM #	PART #	REQD.	DESCRIPTION	MATERIAL
1	SW-014	1	FRAME HEAD	6063-T5
2	SW52101	1	FRAME SILL	6063-T5
3	SW-011	2	FRAME JAMB	6063-T5
4	SW40111	1	MEETING RAIL	6063-T5
5	SW-017	1	SASH TOP RAIL	6063-T5
6	SW43355	1	SASH BOTTOM RAIL	6063-T5
7	SW8202B	2	SASH CAM	NYLON
8	SW-012	2	SASH SIDE RAIL	6063-T5
9	SW-AS	AS REQ	ASSEMBLY SCREWS	# 8X1" PH PHILLIP CRS
10	SW8202A	4/VENT	FACE GUIDES	NYLON
11	SW43353	2/VENT	LATCH BOTTOM RAIL	PLASTIC
12	SW1820	AS RQD	SEAL PILE	FELT
13	SW3257	AS RQD	WEATHER STRIP BULB	VINYL
14	–	AS RQD	SILICONE	DC-899/GE-1200
15	SWW101	AS RQD	GLAZING BEAD	6063-T6
16	SW540	2	SPIRAL BALANCE	ALUMINUM
17	SW-667	2/VENT	LATCH	ZINC
18	SW3082	AS RQD	WEATHER STRIP BULB	VINYL

Sunshine Windows Manufacturing, Inc.
1745 W. 33rd Place
Hialeah, Florida 33012
Ph: (305)364-9952
Fax:(305)828-5118

SERIES 2000 ALUMINUM SINGLE HUNG IMPACT RESISTANT WINDOW

PRODUCT REVISED
as complying with the Florida
Building Code
Acceptance No 09-1217.05
Expiration Date 04/24/2013
By
Miami Dade Product Control
Division

12-8-09
FRANCISCO HERNANDEZ
FLORIDA PE # 51393

Drawn By: RF
Date: 04-02-08
Scale: 1/2"=1'
Revision: 12-8-09
Revision:

DRAWING NO.
SH08-03

SHEET
6 OF 6

IMPACT RESISTANT WINDOW