MIAMI-DADE COUNTY, FLORIDA
PRODUCT CONTROL SECTION
11805 SW 26 Street, Room 208
Miami, Florida 33175–2474
T (786) 315–2590 F (786) 315–2599
www.miamidade.gov/economy

DEPARTMENT OF REGULATORY AND ECONOMIC RESOURCES (RER)
BOARD AND CODE ADMINISTRATION DIVISION

NOTICE OF ACCEPTANCE (NOA)

Kawneer Company, Inc.
555 Guthridge Court
Norcross, GA 30092

SCOPE:

This NOA is being issued under the applicable rules and regulations governing the use of construction materials. The documentation submitted has been reviewed and accepted by Miami–Dade County RER – Product Control Section to be used in Miami–Dade County and other areas where allowed by the Authority Having Jurisdiction (AHJ).

This NOA shall not be valid after the expiration date stated below. The Miami–Dade County Product Control Section (In Miami–Dade County) and/ or the AHJ (in areas other than Miami–Dade County) reserve the right to have this product or material tested for quality assurance purposes. If this product or material fails to perform in the accepted manner, the manufacturer will incur the expense of such testing and the AHJ may immediately revoke, modify, or suspend the use of such product or material within their jurisdiction. RER reserves the right to revoke this acceptance, if it is determined by Miami–Dade County Product Control Section that this product or material fails to meet the requirements of the applicable building code.

This product is approved as described herein, and has been designed to comply with the Florida Building Code, including the High Velocity Hurricane Zone.

DESCRIPTION: Series "7–$^{13}/_{16}$" Deep 1600 System 1" Aluminum Glazed Curtain Wall – L.M.I.

APPROVAL DOCUMENT: Drawing No. **1789**, titled series "$7^{13}/_{16}$" Deep 1600 System 1 Curtain Wall (L.M.I.) ", sheets 01 through 18 of 18, dated 02/14/12, prepared by W.W. Schaefer Engineering & Consulting, P. A., signed and sealed by Warren W. Schaefer, P. E., bearing the Miami–Dade County Product Control Section Revision stamp with the Notice of Acceptance number and Expiration date by the Miami–Dade County Product Control Section.

MISSILE IMPACT RATING: Large and Small Missile Impact Resistant

LABELING: Each unit shall bear a permanent label with the manufacturer's name or logo, city, state, series, and following statement: "Miami–Dade County Product Control Approved", unless otherwise noted herein.

RENEWAL of this NOA shall be considered after a renewal application has been filed and there has been no change in the applicable building code negatively affecting the performance of this product.

TERMINATION of this NOA will occur after the expiration date or if there has been a revision or change in the materials, use, and/ or manufacture of the product or process. Misuse of this NOA as an endorsement of any product, for sales, advertising or any other purposes shall automatically terminate this NOA. Failure to comply with any section of this NOA shall be cause for termination and removal of NOA.

ADVERTISEMENT: The NOA number preceded by the words Miami–Dade County, Florida, and followed by the expiration date may be displayed in advertising literature. If any portion of the NOA is displayed, then it shall be done in its entirety.

INSPECTION: A copy of this entire NOA shall be provided to the user by the manufacturer or its distributors and shall be available for inspection at the job site at the request of the Building Official.

This NOA **revises NOA No. 12–0622.07** and consists of this page 1 and evidence pages E–1, E–2, E–3 and E–4, as well as approval document mentioned above.

The submitted documentation was reviewed by **Jaime D. Gascon, P. E.**

MIAMI-DADE COUNTY APPROVED

J. Gascon 8/24/14

Kawneer Company, Inc.

NOTICE OF ACCEPTANCE: EVIDENCE SUBMITTED

A. DRAWINGS

1. Manufacturer's die drawings and sections.
   (Submitted under previous NOA's No.'s 12–0622.07 & 06–0320.19)
2. Drawing No. **1789**, titled series "$7^{13}/_{16}$" Deep 1600 System 1 Curtain Wall (L.M.I.) ", sheets 01 through 18 of 18, dated 02/14/12, prepared by W.W. Schaefer Engineering & Consulting, P. A., signed and sealed by Warren W. Schaefer, P. E.
   (Submitted under previous NOA No.12–0622.07)

B. TESTS

1. Test reports on: 1) Air Infiltration Test, per FBC, TAS 202–94
   2) Uniform Static Air Pressure Test, Loading per FBC TAS 202–94
   3) Water Resistance Test, per FBC, TAS 202–94
   4) Large Missile Impact Test per FBC, TAS 201–94
   5) Cyclic Wind Pressure Loading per FBC, TAS 203–94

   along with marked–up drawings and installation diagram of curtain wall system, prepared by Architectural Testing, Inc., Test Report No. **ATI–B3877.01–550–18**, dated 02/20/12, signed and sealed by Vinu J. Abraham, P. E.
   (Submitted under previous NOA No.12–0622.07)
2. Test reports on: 1) Uniform Static Air Pressure Test, Loading per FBC, TAS 202–94
   2) Large Missile Impact Test per FBC, TAS 201–94
   3) Small Missile Impact Test per FBC, TAS 201–94
   4) Cyclic Wind Pressure Loading per FBC, TAS 203–94

   along with marked–up drawings and installation diagram of curtain wall system, prepared by Hurricane Test Laboratory, LLC, Test Report No. **HTL–0049–0202–05,** dated 02/07/05 and 05/21/05, signed and sealed by Vinu J. Abraham, P. E.
   (Submitted under previous NOA No. 06–0320.19)
3. Test reports on: 1) Air Infiltration Test, per FBC, TAS 202–94
   2) Uniform Static Air Pressure Test, Loading per FBC TAS 202–94
   3) Water Resistance Test, per FBC, TAS 202–94
   4) Small Missile Impact Test per FBC, TAS 201–94
   5) Large Missile Impact Test per FBC, TAS 201–94
   6) Cyclic Wind Pressure Loading per FBC, TAS 203–94

   along with marked–up drawings and installation diagram of curtain wall system, prepared by Hurricane Test Laboratory, Inc., Test Report No. **HTL–0049–1106–00,** dated 06/29/01, signed and sealed by Vinu J. Abraham, P. E.
   (Submitted under previous NOA No. 06–0320.19)

Jaime D. Gascon, P. E.
Product Control Section Supervisor
NOA No. 14–0430.23
Expiration Date: June 22, 2016
Approval Date: September 04, 2014

NOTICE OF ACCEPTANCE: EVIDENCE SUBMITTED

B. TESTS (CONTINUED)

4. Test reports on: 1) Uniform Static Air Pressure Test, Loading per FBC, TAS 202–94
   2) Large Missile Impact Test per FBC, TAS 201–94
   3) Small Missile Impact Test per FBC, TAS 201–94
   4) Cyclic Wind Pressure Loading per FBC, TAS 203–94

   along with marked–up drawings and installation diagram of curtain wall system, prepared by Hurricane Test Laboratory, Inc., Test Report No. **HTL–0049–0406–01,** dated 06/29/01, signed and sealed by Vinu J. Abraham, P. E.
   (Submitted under previous NOA No. 06–0320.19)

C. CALCULATIONS

1. Anchor verification calculations and structural analysis, complying with FBC, prepared by W.W. Schaefer Engineering & Consulting, P. A., dated 03/13/12, signed and sealed by Warren W. Schaefer, P. E.
   (Submitted under previous NOA No.12–0622.07)
2. **Glazing complies with ASTM E 1300–98/ 04/ 09**

D. QUALITY ASSURANCE

1. Miami–Dade Department of Regulatory and Economic Resources (RER).

E. MATERIAL CERTIFICATIONS

1. Notice of Acceptance No. **13–0129.27** issued to **E.I. DuPont DeNemours & Co., Inc.** for their **"DuPont Butacite® PVB Interlayer"** dated 04/11/13, expiring on 12/11/16.
2. Notice of Acceptance No. **11–0624.02** issued to **E.I. DuPont DeNemours & Co.**, Inc. for their **"DuPont SentryGlas® Interlayer"** dated 08/25/11, expiring on 01/14/17.
3. Notice of Acceptance No. **13–1105.10** issued to **SAF–GLAS, LLC** for their **"SAF–GLAS Polycarbonate Glass Interlayer"**, dated 12/19/13, expiring on 12/16/17.
4. Notice of Acceptance No. **14–0423.16** issued to **Eastman Chemical Company (MA)** for their **"Saflex HP Clear or Color Glass Interlayers"** dated 06/19/14, expiring on 04/14/18.
5. Notice of Acceptance No. **14–0423.17** issued to **Eastman Chemical Company (MA)** for their **"Saflex Clear and Color Glass Interlayers"** dated 0619/14, expiring on 05/21/16.
6. Trelleborg Part No. **BRM–270400** EPDM exterior glazing gasket complying with ASTM C864 Option II exceptions, ASTM D412 1509 PSI; D395B 22 HRS @ 70°F 16%; ASTM D 2240 Type A 70; ASTM D 573 70 HRS @ 100°C +2.0%, –9.2% and + 6 pts.; ASTM D 624–Die–C 101.7 ppi; ASTM D 1149 100 HRS/ 100pphm @ 40°C 20% No Cracks; ASTM D746 max. –42.8°C; ASTM D 926 No Migration Stain and ASTM C 1166 No Limit.
   (Submitted under previous NOA No.12–0622.07)

Jaime D. Gascon, P. E.
Product Control Section Supervisor
NOA No. 14–0430.23
Expiration Date: June 22, 2016
Approval Date: September 04, 2014

E. MATERIAL CERTIFICATIONS (CONTINUED)

7. Test Reports No.'s **ARDL–PN–74740–A** and **ARDL–PN–7474–BB**, issued and prepared by Akron Rubber Development Laboratory, Inc., dated 08/21/02, for TREMCO EPDM exterior glazing gasket complying with ASTM C864 Option II exceptions, ASTM D412 1871 PSI, D395B 22 HRS 100°C 14.4%; ASTM D 573 70 HRS @ 100°C –5.0%, –2.2% and + 4 pts.; ASTM D 624–Die–C 162.2 ppi; ASTM D 1149 100 HRS/ 100pphm @ 40°C 20% No Cracks; ASTM D746 max. –58°C; ASTM D 926 No Migration Stain and ASTM C 1166 No Limit, dated 08/28/07 and 09/04/07, both signed by Jim Drummond.
(Submitted under previous NOA No. 08–1103.09)

F. STATEMENTS

1. Statement letter of conformance and complying with **FBC 5TH Edition (2014)**, issued by W.W. Schaefer Engineering & Consulting, P. A., dated 04/14/14, signed and sealed by Warren W. Schaefer, P. E.
2. Statement letter of conformance and complying with **FBC–2010**, issued by W.W. Schaefer Engineering & Consulting, P. A., dated 03/14/12, signed and sealed by Warren W. Schaefer, P. E.
(Submitted under previous NOA No.12–0622.07)
3. Notification of successor engineer per section 61g15–27.001 of the Florida Administrative Code, notifying original engineer that the successor engineer is assuming full professional and legal responsibility for all engineering documents pertaining to the curtain wall system 1600 System 1 & 2 of Kawneer Company, Inc., dated 02/29/12, signed and sealed by Warren W. Schaefer, P. E.
(Submitted under previous NOA No.12–0622.07)
4. Statement letter of no financial interest, issued by W.W. Schaefer Engineering & Consulting, P. A., dated 02/28/12, signed and sealed by Warren W. Schaefer, P. E.
(Submitted under previous NOA No.12–0622.07)
5. Laboratory compliance letter for Test Report No. **ATI–B3877,01–550–18**, issued by Architectural Testing, Inc., dated 05/22/12, signed and sealed by Vinu J. Abraham, P. E. ***(Submitted under previous NOA No.12–0622.07)***
6. Laboratory compliance letters for Test Report No. **HTL–0049–0202–05,** issued by Hurricane Test Laboratory, Inc., dated 02/07/05 and 05/21/05, signed and sealed by Vinu J. Abraham, P. E.
(Submitted under previous NOA No. 06–0320.19)
7. Laboratory addendum letters for Test Reports No.'s **HTL–0049–0406–01** and **HTL–0049–1106–00**, both issued by Hurricane Test Laboratory, Inc., dated 09/15/03, both signed and sealed by Vinu J. Abraham, P. E.
(Submitted under previous NOA No. 06–0320.19)

Jaime D. Gascon, P. E.
Product Control Section Supervisor
NOA No. 14–0430.23
Expiration Date: June 22, 2016
Approval Date: September 04, 2014

F. STATEMENTS (CONTINUED)

8. Laboratory compliance letters for Test Reports No.'s **HTL–0049–0406–01** and HTL–**0049–1106–00**, both issued by Hurricane Test Laboratory, Inc., dated 06/29/01, both signed and sealed by Vinu J. Abraham, P. E.
(Submitted under previous NOA No. 06–0320.19)

G. OTHERS

1. Notice of Acceptance No. **12–0622.07**, issued to Kawneer Company, Inc., for their Series "**1600 System 1 No Steel Reinforcement Aluminum Curtain Wall – L.M.I.**", approved on 08/30/12 and expiring on 06/22/16.
2. Test reports on: 1) Uniform Static Air Pressure Test, Loading per FBC, TAS 202–94
Reference only 2) Small Missile Impact Test per FBC, TAS 201–94
3) Cyclic Wind Pressure Loading per FBC, TAS 203–94
along with marked–up drawings and installation diagram of curtain wall system, prepared by Architectural Testing, Inc., Test Report No. **ATI–B8873.01–550–18,** dated 05/22/12, signed and sealed by Vinu J. Abraham, P. E.
(Submitted under previous NOA No.12–0622.07)

Jaime D. Gascon, P. E.
Product Control Section Supervisor
NOA No. 14–0430.23
Expiration Date: June 22, 2016
Approval Date: September 04, 2014

GENERAL NOTES:

1. THESE CURTAIN WALL SYSTEMS HAVE BEEN TESTED, ANALYZED & APPROVED FOR DESIGN PRESSURES NOT TO EXCEED THOSE SHOWN IN THE "ALLOWABLE DESIGN PRESSURE TABLE(S)".
2. OPENINGS, BUCKING & BUCKING FASTENERS MUST BE PROPERLY DESIGNED & INSTALLED TO TRANSFER WIND LOADS TO THE STRUCTURE.
3. ALL HARDWARE & FASTENERS SHALL BE IN ACCORDANCE WITH THESE DRAWINGS & SHALL NOT VARY UNLESS SPECIFICALLY MENTIONED ON THE DRAWINGS. SPECIFIED ANCHOR EMBED TO BASE MATERIAL SHALL BE BEYOND WALL FINISH OR STUCCO.
4. THE DETAILS & SPECIFICATIONS SHOWN HEREIN REPRESENT THE PRODUCTS TESTED & PROPOSED FOR WATER, AIR, IMPACT, CYCLIC & UNIFORM STATIC AIR PRESSURE TESTING IN CONFORMANCE WITH THE FLORIDA BUILDING CODE PROTOCALS TAS-201, 202 & 203 FOR LARGE MISSILE IMPACT CURTAIN WALL SYSTEMS.
5. THESE CURTAIN WALL SYSTEMS HAVE BEEN DESIGNED IN ACCORDANCE WITH AND MEET THE REQUIREMENTS OF THE FLORIDA BUILDING CODE (FBC) INCLUDING HIGH VELOCITY HURRICANE ZONES (HVHZ).
6. IMPACT SHUTTERS ARE NOT REQUIRED WITH THIS CURTAIN WALL SYSTEM.
7. DETERMINE THE POSITIVE & NEGATIVE DESIGN LOADS TO USE WHEN REFERENCING THESE DOCUMENTS IN ACCORDANCE WITH THE GOVERNING CODE AND GOVERNING WIND VELOCITY. FOR WIND LOAD CALCULATIONS IN ACCORDANCE WITH THE FLORIDA BUILDING CODE, A DIRECTIONALITY FACTOR OF Kd = 0.85 MAY BE APPLIED PER THE ASCE-7 STANDARD.
8. NO INCREASE IN ALLOWABLE STRESS HAS BEEN USED IN THE CERTIFICATION OF THIS PRODUCT. WIND LOAD DURATION FACTOR Cd = 1.6 WAS USED FOR WOOD SCREW LOAD VERIFICATION ONLY.
9. MATERIALS, INCLUDING BUT NOT LIMITED TO STEEL SCREWS, THAT COME INTO CONTACT WITH OTHER DISSIMILAR MATERIALS SHALL MEET THE REQUIREMENTS OF FLORIDA BUILDING CODE CHAPTER 20.
10. THERE SHALL BE NO LIMIT TO THE NUMBER OF HORIZONTAL & VERTICAL PANELS USED FOR ANY JOB PROVIDING ALL RESTRICTIONS ARE MET PER THE ELEVATIONS.

DRAWING USE INSTRUCTIONS:

1. DETERMINE IF THE WALL SYSTEM IS TO BE A MULTI-SPAN, REINFORCED SINGLE SPAN, OR NON-REINFORCED SINGLE SPAN CONDITION. IF MULTI-SPAN, ALL CONDITIONS SHOWN ON SHEETS 2 & 3 SHALL APPLY. IF A REINFORCED SINGLE SPAN, ALL CONDITIONS SHOWN ON SHEET 4 SHALL APPLY. IF A NON-REINFORCED SINGLE SPAN, ALL CONDITIONS SHOWN ON SHEET 5 SHALL APPLY.
2. CONDITIONS MAY NOT BE MIXED BETWEEN WALL SYSTEM TYPES.
3. ALLOWABLE GLASS PRESSURE SHALL BE CONSIDERED WITH ALL WALL CONDITIONS AND SHALL CONTROL IF LESS THAN THOSE ALLOWABLE PRESSURES STATED FOR THE APPLICABLE FRAMING SYSTEM.

FREE SPANNING JAMB PERIMETER SEALANT NOTE (APPLICABLE TO ELEVATION ON SHEET 5):
WHEN THERE IS NO CONTINUOUS JAMB SUPPORT, THE MINIMUM & MAXIMUM ALLOWABLE SPACE BETWEEN JAMB FRAME MEMBERS & THE OPENING SUBSTRATE OR FINISHES SHALL BE SPECIFIED BY THE ENGINEER OR ARCHITECT OF RECORD FOR EACH JOB BUT SHALL NOT BE LESS THAN 1/2" NOR GREATER THAN 1 3/8". WHEN CONSIDERING TYPE, DEPTH & JOINT SPAN OF SEALANT, THE ENGINEER/ARCHITECT SHALL TAKE INTO CONSIDERATION THE DEFLECTION OF THE JAMB MEMBER THAT WOULD OCCUR WHILE SUPPORTING THE JOB REQUIRED DESIGN WIND PRESSURE. ALSO TO BE CONSIDERED SHALL BE THE MATERIALS & SURFACES TO WHICH THE SEALANT WILL BE APPLIED.

CORNER CONSTRUCTION:

STANDARD FRAMING AT TOP & BOTTOM HORIZONTAL MEMBERS: VERTICAL MEMBERS RUN THROUGH WHILE THE HORIZONTAL MEMBERS ARE SQUARE CUT, BUTTED AND MECHANICALLY FASTENED TO THE VERTICAL MEMBERS VIA A SHEAR BLOCK (ITEM #14). THE SHEAR BLOCK IS MECHANICALLY FASTENED TO THE VERTICAL FRAME MEMBER WITH 2 NO. 12 X 1 7/8" FHTF SCREWS. THE HORIZONTAL FRAME MEMBERS ARE ATTACHED TO THE SHEAR BLOCK WITH 2 NO. 12 X 7/8" PHTF SCREWS. CORNERS ARE SEALED WITH DOW 795 SILICONE SEALANT.

STANDARD FRAMING AT INTERMEDIATE HORIZONTAL MEMBERS: HORIZONTAL MEMBERS ARE SQUARE CUT, BUTTED AND MECHANICALLY FASTENED TO THE VERTICAL FRAME MEMBERS VIA A SHEAR BLOCK (ITEM #16). THE SHEAR BLOCK IS MECHANICALLY FASTENED TO THE VERTICAL FRAME MEMBER WITH 2 NO. 12 X 1 7/8" FHTF SCREWS. THE INTERMEDIATE HORIZONTAL FRAME MEMBERS ARE ATTACHED TO THE SHEAR BLOCK WITH 2 NO. 12 X 7/8" FHTF SCREWS. CORNERS ARE SEALED WITH DOW 795 SILICONE SEALANT.

TYPICAL 90 DEGREE CORNER FRAMING: VERTICAL CORNER MEMBERS RUN THROUGH WHILE THE HORIZONTAL MEMBERS ARE MITER CUT, BUTTED AND MECHANICALLY FASTENED TO THE VERTICAL MEMBERS VIA A SHEAR BLOCK (ITEM #15). THE SHEAR BLOCK IS MECHANICALLY FASTENED TO THE VERTICAL CORNER FRAME MEMBERS WITH 3 NO. 12 X 7/16" PHTF SCREWS. THE HORIZONTAL FRAME MEMBERS ARE ATTACHED TO THE SHEAR BLOCK WITH 2 NO. 12 X 1/2" FHTF SCREWS. CORNERS ARE SEALED WITH DOW 795 SILICONE SEALANT.

90 DEGREE CORNER FRAMING AT SPLICE JOINT LOCATIONS: VERTICAL CORNER MEMBERS RUN THROUGH WHILE THE HORIZONTAL MEMBERS ARE MITER CUT, BUTTED AND MECHANICALLY FASTENED TO THE VERTICAL MEMBERS VIA A SHEAR BLOCK (ITEM #18). THE SHEAR BLOCK IS MECHANICALLY FASTENED TO THE VERTICAL CORNER FRAME MEMBERS WITH 2 NO. 12 X 7/16" PHTF SCREWS (2 PER SHEAR BLOCK). THE HORIZONTAL FRAME MEMBERS ARE ATTACHED TO THE SHEAR BLOCK WITH 2 NO. 12 X 1/2" FHTF SCREWS (2 PER SHEAR BLOCK). CORNERS ARE SEALED WITH DOW 795 SILICONE SEALANT.

STANDARD FRAMING AT SPLICE JOINT LOCATIONS: VERTICAL MEMBERS RUN THROUGH WHILE THE HORIZONTAL MEMBERS ARE SQUARE CUT, BUTTED AND MECHANICALLY FASTENED TO THE VERTICAL MEMBERS VIA A SHEAR BLOCK (ITEM #17). THE SHEAR BLOCK IS MECHANICALLY FASTENED TO THE VERTICAL CORNER FRAME MEMBERS WITH 2 NO. 12 X 1 7/8" PHTF SCREWS (2 PER SHEAR BLOCK). THE HORIZONTAL FRAME MEMBERS ARE ATTACHED TO THE SHEAR BLOCK WITH 2 NO. 12 X 1/2" FHTF SCREWS (2 PER SHEAR BLOCK). CORNERS ARE SEALED WITH DOW 795 SILICONE SEALANT.

THESE I.G. GLASS OPTIONS ARE NOT APPLICABLE FOR USE WITH A VERTICAL CORNER FRAME MEMBER. I.G. GLASS MAY ONLY BE APPLIED BETWEEN INTERMEDIATE & JAMB FRAME MEMBERS (KAWNEER DOES NOT SUPPLY A CORNER PRESSURE PLATE FOR USE WITH I.G. GLASS)

GLASS D.L.O. SIZE VS. PRESSURE

GLASS OPTIONS	MAXIMUM D.L.O. WIDTH	MAXIMUM D.L.O. HEIGHT	ALLOWABLE DESIGN PRESSURE
1, 2, 3, 6 & 7	58 1/2"	93 1/2"	+/-90 PSF
	57 3/4"	94 3/4"	+/-90 PSF
	73 3/4"	54 5/8"	+/-90 PSF
4 & 5	58 1/2"	93 1/2"	+/-65 PSF
	57 3/4"	94 3/4"	+/-65 PSF
	73 3/4"	54 5/8"	+/-65 PSF

SEE GLAZING DETAILS FOR GLASS OPTIONS

HEIGHT & WIDTH MAY NOT BE INTERCHANGED!

PRODUCT REVISED
as complying with the Florida Building Code
Acceptance No 14-0430.23
Expiration Date 06/22/2016
By
Miami Dade Product Control

PRODUCT REVISED
as complying with the Florida Building Code
Acceptance No 12-0622.7
Expiration Date 06/22/2016
By
Miami Dade Product Control

THESE DRAWINGS ARE APPLICABLE ONLY TO THE PRODUCT SPECIFIED. THEY MAY NOT BE USED FOR THE ASSEMBLY AND/OR INSTALLATION OF ANY OTHER PRODUCT NOR MAY THEY BE USED FOR RATIONAL AND/OR LOCAL APPROVAL OF ANY PRODUCT NOT PRODUCED BY THE MANUFACTURER STATED ON THESE DRAWINGS.

MAXIMUM ALLOWABLE FRAMING MEMBER DEFLECTION

L/180 (SPAN OF MEMBER DIVIDED BY 180)

NOTE: THIS IS THE MAXIMUM ALLOWABLE DEFLECTION AS RESTRICTED BY THE BUILDING CODE. IF JOB CONDITIONS REQUIRE LESS DEFLECTION, THE JOB CONDITIONS SHALL CONTROL.

ANCHOR LEGEND

ANCHOR SYMBOL	ANCHOR DESCRIPTION
⊞	STANDARD WIND LOAD ANCHOR
⊕	CORNER WIND LOAD ANCHOR
◬	STANDARD DEAD LOAD ANCHOR
⌖	CORNER DEAD LOAD ANCHOR
■	STANDARD T-ANCHOR
◉	CORNER T-ANCHOR
◆	DOOR JAMB U-ANCHOR
▲	F-ANCHOR (FRAME MEMBER ENDS)

SEE SHEETS 6-10 FOR DETAILS OF ANCHORS

VERTICAL MEMBER REINFORCEMENT LEGEND

R1 = REINFORCEMENT PART NUMBER 36
R2 = REINFORCEMENT PART NUMBER 36 & 37
R3 = REINFORCEMENT PART NUMBERS 36, 37 & 38
R4 = REINFORCEMENT PART NUMBERS 36, 37, 38 & 39
R5 = REINFORCEMENT PART NUMBER 40

SEE PARTS DRAWINGS & PARTS LIST FOR APPLICABLE REINFORCEMENT MEMBERS & THEIR DETAIL.

NOTE: INFORMATION ON THIS SHEET APPLIES TO ALL ELEVATIONS.

WARREN W. SCHAEFER LICENSE No. 44135 STATE OF FLORIDA PROFESSIONAL ENGINEER

JUN 19 2012
WARREN W. SCHAEFER, P.E.
P.E. NO. 44135

DRAWN BY:	CHECKED BY:
W.W.S.	W.W.S.
PLOT: 1=48	DATE: 02/14/12

NO.	REVISION DESCRIPTION	BY	DATE

DRAWING TITLE
7 13/16" DEEP 1600 SYSTEM 1 CURTAIN WALL (L.M.I.)

MANUFACTURER
KAWNEER COMPANY, INC.
555 GUTHRIDGE COURT
NORCROSS, GA 30092
770-449-5555

CONSULTANTS
W. W. SCHAEFER ENGINEERING & CONSULTING, P.A. (CA 6809)
7480 150TH COURT NORTH
PALM BEACH GARDENS, FL 33418
PHONE: 561-744-3424

CERTIFICATION

DRAWING NO. 1789 REV.

SHEET NO. 1 OF 18

NOTES APPLICABLE TO MULTI-SPAN CURTAIN WALLS

1. WITH EACH APPLICABLE JOB, SHOP DRAWINGS SHALL BE PREPARED AND CERTIFIED BY A LICENSED ENGINEER EXPERIENCED WITH CURTAIN WALL DESIGN.
2. THE RESPONSIBLE ENGINEER SHALL DESIGN THE WALL SYSTEM SEPARATELY FOR EACH JOB & CONFIRM THAT ALL CONDITIONS STATED HERE-IN HAVE BEEN CONSIDERED AND ADHERED TO IN THAT DESIGN.
3. IN HIS/HER DESIGN, THE RESPONSIBLE ENGINEER SHALL VERIFY THE INTEGRITY OF ALL CONNECTIONS AND FRAMING MEMBERS & SHALL TAKE FULL RESPONSIBILITY FOR THE INTEGRITY OF THE SYSTEM DESIGN AS A WHOLE WHILE NOT ALLOWING THE CONDITIONS STATED HERE-IN TO BE EXCEEDED. ALLOWABLE SUPPORT REACTIONS AND VERTICAL FRAMING MEMBER BENDING MOMENTS SHALL NOT EXCEED THOSE STATED IN THE TABLES ON THIS SHEET, REGARDLESS OF JOB DESIGN.
4. THE CURTAIN WALL DESIGN ENGINEER SHALL CONSIDER ALL APPLICABLE REACTION LOADS IN HIS/HER DESIGN WHILE NOT ALLOWING THE REACTIONS RESUTLING FROM WIND LOADS TO EXCEED THOSE SPECIFIED IN THE ANCHOR REACTION LOAD TABLE.
5. THE WORSE CASE OF THE CONDITIONS SPECIFIED IN THIS PRODUCT APPROVAL DRAWING AND THOSE DETERMINED BY THE INDIVIDUAL JOB ENGINEER'S ANALYSIS & DESIGN SHALL CONTROL AS APPLICABLE FOR THE ACTUAL JOB.
6. REGARDLESS OF JOB DETERMINED MEMBER STRESS & DEFLECTION CONDITIONS, THE FOLLOWING SHALL APPLY:
   - A. REINFORCEMENT TYPE R1 MUST BE PLACED BETWEEN SUPPORTS IN ALL VERTICAL INTERMEDIATE FRAME MEMBERS THAT SPAN OVER 114" BETWEEN THEIR SUPPORTS (NOT REQUIRED IF THE UNSUPPORTED SPAN IS 114" OR LESS & THE JOB DESIGN ALLOWS FOR NO REINFORCEMENT).
   - B. IF BETWEEN 2 DOOR UNITS, THE VERTICAL FRAMING MEMBER SHALL BE REINFORCED. REINFORCEMENT SHALL BEGIN MAXIMUM 12" UP FROM THE SILL & EXTEND MINIMUM 12" PAST THE DOOR HEAD FRAME.
   - C. ALL VERTICAL INTERMEDIATE FRAMING MEMBERS SHALL BE REINFORCED ACROSS ALL INTERMEDIATE DEAD/WIND LOAD ANCHOR LOCATIONS WITH ONE OF THE REINFORCEMENT TYPES R1, R2 OR R3 AS SPECIFIED IN THE ELEVATION. THIS REINFORCEMENT SHALL EXTEND A MINIMUM OF 18" ABOVE & BELOW THE SUPPORT.
   - D. REINFORCEMENT TYPE R4 IS REQUIRED IN ALL VERTICAL CORNER FRAME MEMBERS. IT SHALL BE CONTINUOUS BETWEEN ALL MEMBER SPLICE JOINTS AND EXTEND TO WITHIN 24" OF WALL BASE, 12" OF A SPLICE & 18" OF THE WALL TOP.
7. REINFORCEMENT IS NOT REQUIRED TO BE CONTINUOUS TOP TO BOTTOM WITHIN THE VERTICAL FRAMING MEMBERS. REINFORCEMENT MAY BE NON-CONTINUOUS, AS DETERMINED FOR EACH JOB, PROVIDING IT MEETS THE MINIMUM GUIDELINES OF THIS DRAWING.
8. THIS ELEVATION SHOWS THE 1600 CURTAIN WALL SYSTEM 1 IN A MULTI-STORY APPLICATION. THE NUMBER OF FLOORS WITH WHICH THIS SYSTEM MAY BE USED RANGE FROM TWO(2) TO UNLIMITED WITH THE ONLY RESTRICTIONS BEING THE MAXIMUM SPAN BETWEEN FLOORS/SUPPORTS AND THE MAXIMUM D.L.O. SIZES SPECIFIED.
9. SPLICING OF VERTICAL FRAME MEMBERS MAY OCCUR BETWEEN SUPPORTS AS REQUIRED. LOCATION OF THOSE SPLICES SHALL BE WHERE A BENDING MOMENT OF NEAR ZERO(0) EXISTS IN THE MEMBER.
10. THE MULTI-SPAN ELEVATION SHOWN SHOWS ONE DOOR SECTION. MULTIPLE DOOR SECTIONS MAY OCCUR SIDE-BY SIDE IN ONE WALL SYSTEM PROVIDING ALL REQUIREMENTS WITHIN THIS DRAWING ARE MET AND THE JOB DESIGN ALLOWS FOR THE MULTIPLE DOOR CONDITION.
11. ALTHOUGH A DOOR SECTION IS SHOWN, THAT SECTION MAY EXIST WITH OR WITHOUT A DOOR.
12. THE ELEVATION HERE-IN SHOWS T-ANCHORS AT THE BASE OF THE WALL ONLY. THESE ANCHORS MAY ALSO BE USED AT THE TOP OF A WALL IN LIEU OF THE WIND/DEAD LOAD ANCHORS SHOWN PROVIDING THE SPAN BETWEEN THE T-ANCHORS AND THE BELOW WIND/DEAD LOAD ANCHORS DOES NOT EXCEED 167 1/2" (SAME SPAN AS AT THE BASE) & THEY ARE INSTALLED THE SAME AS SHOWN AT THE BASE. T-ANCHORS MAY APPLY AT THE TOP END OF A DOOR JAMB FRAME MEMBER.

ANCHOR REQUIREMENTS TABLE (MULTI-SPAN CURTAIN WALL)

OPENING TYPE (SUBSTRATE)	FRAME/CLIP TO OPENING FASTENER TYPE	MINIMUM EMBED	MINIMUM EDGE DIST.
F-PERIMETER ANCHOR SCREWS			
MIN. 1/8" THK A36 STEEL	1/4-14 OR 20 GR. 5 SELF TAP/DRILL SCREW	FULL	1/2"
MIN. 3000 PSI CONCRETE	(1) 3/8" CONCRETE SCREW ANCHOR	2 1/2"	2 1/2"
T & U-ANCHOR SCREWS/BOLTS (VERTICAL MEMBER ENDS)			
MIN. 1/4" THK A36 STEEL	3/8"-16 430 SS HCMS OR GR. 5 CS THREAD FORMING SCREW	FULL	3/4"
	3/8" GR. 5 CS OR 410 SS BOLT WITH LOCK WASHER & NUT	FULL	3/4"
	1/2"-13 300 SS HCMS OR GR. 5 CS THREAD FORMING SCREW	FULL	1"
	1/2" GR. 5 CS OR 410 SS BOLT WITH LOCK WASHER & NUT	FULL	1"
(2) MIN. 3000 PSI CONCRETE	(1) 1/2" CONCRETE SCREW ANCHOR	4"	SEE DETAILS

(1) 3/8" & 1/2" CONCRETE SCREWS SHALL BE SIMPSON STRONG-TIE TITAN HD SCREW ANCHOR (GALVANIZED STEEL).

(2) MINIMUM CONCRETE SLAB THICKNESS FOR PLACEMENT OF "T" & "U" ANCHORS IS 7".

(1) MAXIMUM ALLOWABLE BENDING MOMENTS IN VERTICAL FRAMING MEMBERS (FOR USE WITH MULTI-SPAN CURTAIN WALL)

(2) VERTICAL MEMBER	(3) MAXIMUM ALLOWABLE BENDING MOMENT (POS & NEG)
INTERMEDIATE MEMBER WITH NO REINFORCEMENT	61934 IN-LB
INTERMEDIATE MEMBER WITH REINFORCEMENT "R1"	84610 IN-LB
INTERMEDIATE MEMBER WITH REINFORCEMENT "R2"	115852 IN-LB
INTERMEDIATE MEMBER WITH REINFORCEMENT "R3"	133705 IN-LB
INTERMEDIATE MEMBER WITH REINFORCEMENT "R4"	150418 IN-LB
CORNER MEMBER WITH REINFORCEMENT "R5"	(4) 141377 IN-LB

NOTES:
(1) THE VALUES IS THIS TABLE ARE APPLICABLE TO THE JOB REQUIRED DESIGN OF THE MULTI-SPAN WALL SYSTEM & NEED NOT BE CONSIDERED WITH SINGLE SPAN WALLS. ALL SINGLE SPAN MEMBER & REINFORCEMENT CONDITIONS SHALL BE AS SPECIFICALLY SPECIFIED IN THE SINGLE SPAN ELEVATIONS.
(2) FOR DESCRIPTIONS OF REINFORCEMENTS, SEE THE "VERTICAL MEMBER REINFORCEMENT LEGEND".
(3) ALL VALUES ARE BASED ON THE WORSE CASE OF TESTED MOMENT AND ALLOWABLE MOMENT.
(4) MOMENT VALUE SHOWN FOR THE CORNER MULLION IS DUE TO THE RESULTANT LOAD IN THE PLANE OF THE MULLION (LOAD FROM BOTH SIDES COMBINED INTO A RESULTANT). FOR SINGLE SIDE LOAD, THE ALLOWABLE MOMENT SHALL NOT EXCEED 70688 IN-LB. IN THAT DIRECTION (LOAD VECTOR 45 DEGREES TO MULLION ANGLE).

ANCHOR REACTION LOAD CAPACITY (MULTI-SPAN CURTAIN WALL)

ANCHOR SYMBOL	ANCHOR DESCRIPTION	(1) MAXIMUM ALLOWABLE REACTION LOAD
⊞	STANDARD WIND LOAD ANCHOR	8980 LBS
⊕	CORNER WIND LOAD ANCHOR	(2) 5967 LBS
◬	STANDARD DEAD LOAD ANCHOR	8980 LBS
⊕	CORNER DEAD LOAD ANCHOR	(2) 5967 LBS
◘	STANDARD T-ANCHOR	3152 LBS
◕	CORNER T-ANCHOR	(2) 1789 LBS
◆	DOOR JAMB U-ANCHOR	2694 LBS
◭	F-ANCHOR (FRAME MEMBER ENDS)	1131 LBS

(1) MAXIMUM ALLOWABLE REACTION LOADS SHOWN CONSIDER REACTIONS FROM WIND LOADS ONLY & APPLY TO BOTH POSITIVE & NEGATIVE WIND DIRECTIONS. IN ADDITION TO WIND LOADS, THE CURTAIN WALL DESIGN ENGINEER OF RECORD FOR EACH PROJECT SHALL ALSO CONSIDER OTHER APPLICABLE LOADS SUCH AS, BUT POSSIBLY NOT LIMITED TO, DEAD LOADS FROM THE CURTAIN WALL WEIGHT.
(2) REACTION LOAD SHOWN FOR THE CORNER ANCHORS IS THE RESULTANT LOAD IN THE PLANE OF THE MULLION (LOAD FROM BOTH SIDES COMBINED INTO A RESULTANT). FOR EITHER SIDE LOAD, THE ALLOWABLE REACTION LOAD SHALL NOT EXCEED 4220 LB. FROM EITHER SIDE FOR THE WIND & DEAD LOAD ANCHORS NOR 1265 LBS FROM EITHER SIDE FOR THE T-ANCHOR.

MAXIMUM ALLOWABLE DESIGN PRESSURE (MULTI-SPAN CURTAIN WALL)

+90/-90 PSF

1. THE ABOVE STATED PRESSURES ARE THE MAXIMUM ALLOWED ON ANY JOB REGARDLESS OF WHAT THE JOB SPECIFIC DESIGN RESULTS MAY SHOW. INCREASE OF ALLOWABLE DESIGN PRESSURE ON ANY JOB IS CONSIDERED OUTSIDE THE SCOPE OF THIS APPROVAL. SEE "MULTI-SPAN WALL NOTES" ON THIS SHEET FOR ACTUAL JOB DESIGN CONDITIONS.
2. SEE ALLOWABLE GLASS DESIGN PRESSURE TABLE ON SHEET 1 FOR GLASS PRESSURE RESTRICTIONS. THE LESSER OF THE ALLOWABLE PRESSURE ON THE FRAMING SYSTEM AND THAT OF THE GLASS SHALL CONTROL FOR THE OVERALL SYSTEM.

NOTE: INFORMATION ON THIS SHEET APPLIES TO ELEVATIONS ON SHEET 3 ONLY.

PRODUCT REVISED
as complying with the Florida Building Code
Acceptance No 14-0430.23
Expiration Date 06/22/2016
By
Miami Dade Product Control

PRODUCT REVISED
as complying with the Florida Building Code
Acceptance No 12-0622.07
Expiration Date 06/22/2016
By
Miami Dade Product Control

WARREN W. SCHAEFER LICENSE No. 44135 STATE OF FLORIDA PROFESSIONAL ENGINEER

DRAWN BY: W.W.S.	CHECKED BY: W.W.S.
PLOT: 1=48	DATE: 02/14/12

NO.	REVISION DESCRIPTION	BY	DATE

DRAWING TITLE: 7 13/16" DEEP 1600 SYSTEM 1 CURTAIN WALL (L.M.I.)

MANUFACTURER: KAWNEER COMPANY, INC. 555 GUTHRIDGE COURT NORCROSS, GA 30092 770-449-5555

CONSULTANTS: W. W. SCHAEFER ENGINEERING & CONSULTING, P.A. (CA 6809) 7480 150TH COURT NORTH PALM BEACH GARDENS, FL 33418 PHONE: 561-744-3424

CERTIFICATION: JUN 19 2012 WARREN W. SCHAEFER, P.E. NO. 44135

DRAWING NO. 1789 REV.

SHEET NO. 2 OF 18

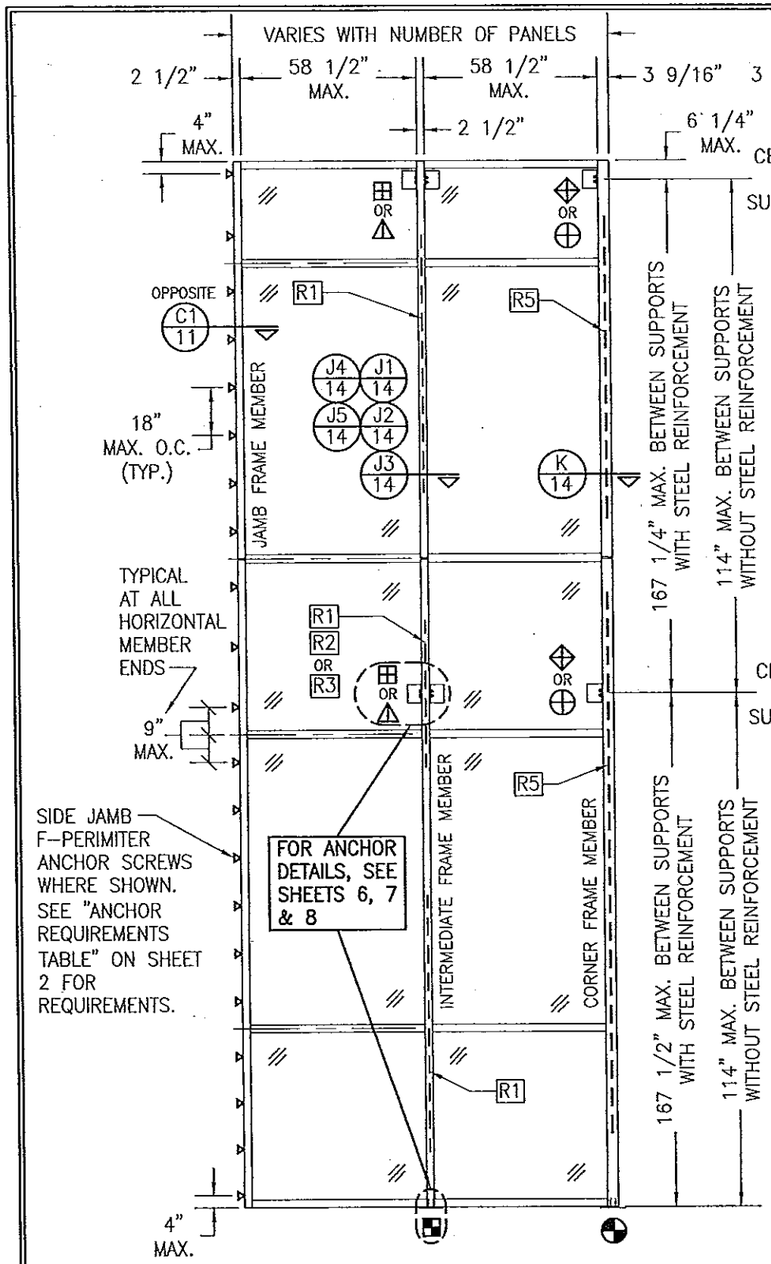

EXTERIOR ELEVATION VIEW "A-A":
MULTI-SPAN CURTAIN WALL
SCALE: 1/4" = 1'-0"

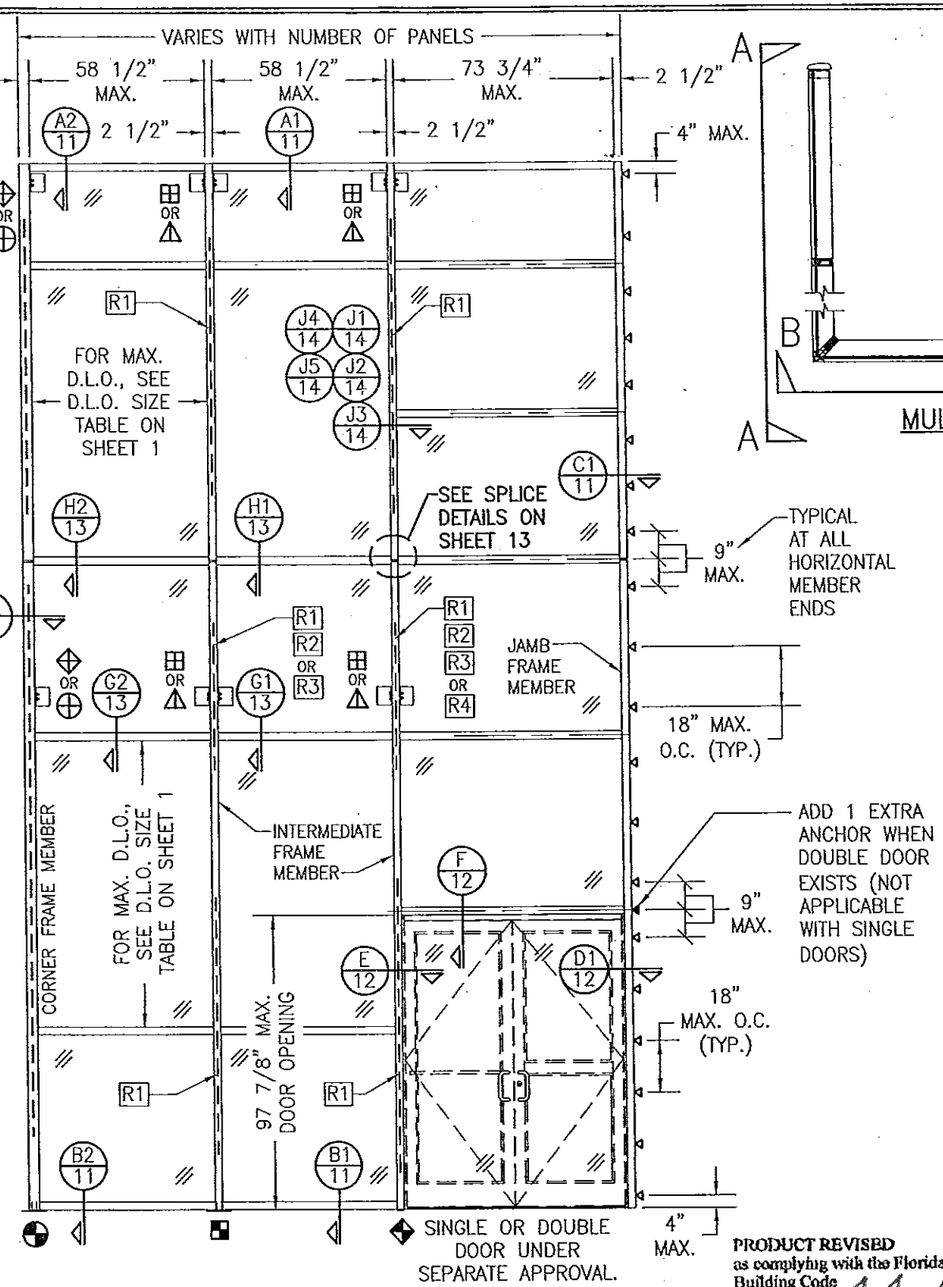

EXTERIOR ELEVATION VIEW "B-B":
MULTI-SPAN CURTAIN WALL
SCALE: 1/4" = 1'-0"

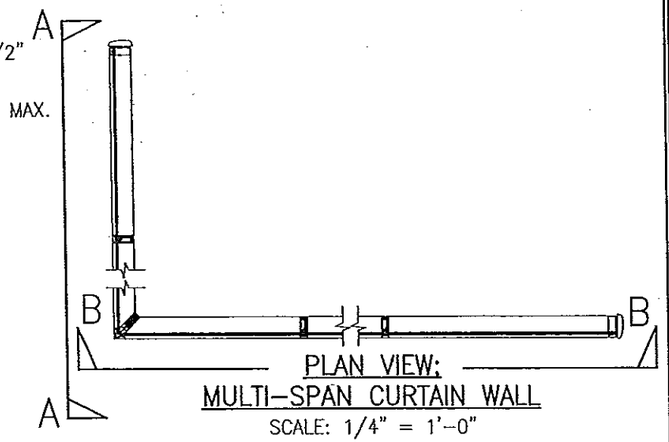

PLAN VIEW:
MULTI-SPAN CURTAIN WALL
SCALE: 1/4" = 1'-0"

PRODUCT REVISED
as complying with the Florida
Building Code
Acceptance No 14-0430.23
Expiration Date 06/22/2016
By
Miami Dade Product Control

PRODUCT REVISED
as complying with the Florida
Building Code
Acceptance No 12-0622.07
Expiration Date 06/22/2016
By
Miami Dade Product Control

WARREN W. SCHAEFER LICENSE No. 44135 STATE OF FLORIDA PROFESSIONAL ENGINEER

DRAWN BY: W.W.S.	CHECKED BY: W.W.S.
PLOT: 1=48	DATE: 02/14/12

NO.	REVISION DESCRIPTION	BY	DATE

DRAWING TITLE
7 13/16" DEEP 1600 SYSTEM 1 CURTAIN WALL (L.M.I.)

MANUFACTURER
KAWNEER COMPANY, INC.
555 GUTHRIDGE COURT
NORCROSS, GA 30092
770-449-5555

CONSULTANTS
W. W. SCHAEFER ENGINEERING & CONSULTING, P.A. (CA 6809)
7480 150TH COURT NORTH
PALM BEACH GARDENS, FL 33418
PHONE: 561-744-3424

CERTIFICATION
JUN 19 2012
WARREN W. SCHAEFER, P.E.
P.E. NO. 44135

DRAWING NO. 1789
REV.
SHEET NO. 3 OF 18

ALLOWABLE DESIGN PRESSURE (SINGLE SPAN REINFORCED CURTAIN WALL)

MAXIMUM MULLION SPAN (IN.)	MAXIMUM LOAD WIDTH (IN.)	ALLOWABLE PRESSURE (POS & NEG PSF) AT STANDARD & CORNER MULLION	ALLOWABLE PRESSURE (POS & NEG PSF) AT DOOR JAMB MULLION
147	76 1/4	81.0	69.3
	72	85.8	73.3
	68 5/8	90.0	77.0
	62	90.0	85.2
	58	90.0	82.6
144	76 1/4	82.7	70.7
	72	87.6	74.9
	68 5/8	90.0	78.6
	62	90.0	86.9
	59	90.0	90.0
132	76 1/4	90.0	77.1
	72	90.0	81.7
	68 5/8	90.0	85.7
	65	90.0	90.0
120	76 1/4	90.0	84.8
	72	90.0	89.8
112	76 1/4	90.0	90.0

PRESSURE TABLE NOTES:
1. SEE ELEVATION FOR DIMENSIONING OF LOAD WIDTH.
2. PRESSURES SHOWN ARE SPECIFIC TO EACH INDIVIDUAL MULLION SUPPORT AREA. ALLOWABLE PRESSURE MAY VARY FROM BAY TO BAY AS DICTATED BY EACH INDIVIDUAL MULLION CONDITION.
3. LESSER OF PRESSURES STATED IN THIS TABLE & THE ALLOWABLE GLASS PRESSURE, AS SHOWN ON SHEET 1, SHALL CONTROL AS ALLOWABLE FOR THE WALL ASSEMBLY.
4. LESSER PRESSURE AT DOOR MULLION IS DUE TO THE DOOR JAMB U-ANCHOR HAVING A LESSER CAPACITY THAN THAT OF THE T-ANCHOR.

PRODUCT REVISED
as complying with the Florida Building Code
Acceptance No 12-0622.07
Expiration Date 06/22/2016
By
Miami Dade Product Control

NOTE: INFORMATION ON THIS SHEET APPLIES TO ELEVATIONS ON THIS SHEET ONLY.

NOTES APPLICABLE TO SINGLE-SPAN REINFORCED CURTAIN WALLS

1. REINFORCEMENT SHALL RUN CONTINUOUS IN INTERMEDIATE AND CORNER VERTICAL MEMBERS & EXTEND TO WITHIN 13 1/2" OF THE ENDS.
2. THERE IS NO LIMIT TO THE NUMBER OF SECTIONS HORIZONTALLY PROVIDING THE OPENING IS DESIGNED TO SUPPORT THE LOADS TRANSFERED FROM THE WALL SYSTEM.
3. THE SINGLE-SPAN ELEVATION SHOWN SHOWS ONE DOOR SECTION. MULTIPLE DOOR SECTIONS MAY OCCUR SIDE-BY SIDE IN ONE WALL SYSTEM PROVIDING ALL REQUIREMENTS WITHIN THIS DRAWING ARE MET & PROPER LOAD WIDTH (DISTANCE BETWEEN DOOR CENTERS) IS CONSIDERED WHEN DETERMINING ALLOWABLE DESIGN PRESSURE.
4. ALTHOUGH A DOOR SECTION IS SHOWN AT A SIDE JAMB, THAT SECTION MAY EXIST WITH OR WITHOUT A DOOR & THE DOOR MAY EXIST IN ANY BAY.
5. THE ELEVATION HERE-IN SHOWS T-ANCHORS AT THE BASE OF THE WALL ONLY. THESE ANCHORS MAY ALSO BE USED AT THE TOP OF A WALL IN LIEU OF THE WIND LOAD ANCHORS SHOWN PROVIDING THEY ARE INSTALLED THE SAME AS SHOWN AT THE BASE.

PRODUCT REVISED
as complying with the Florida Building Code
Acceptance No 14-0430.23
Expiration Date 06/22/2016
By
Miami Dade Product Control

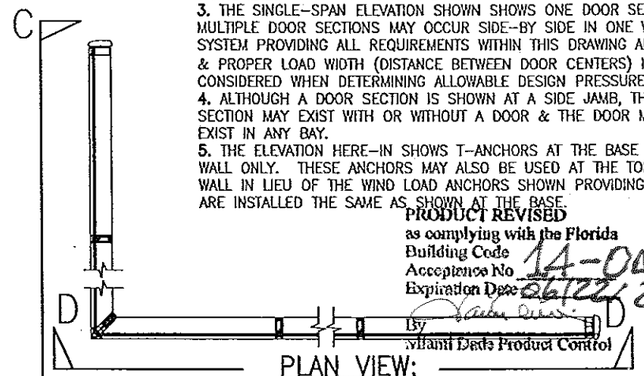

PLAN VIEW:
SINGLE-SPAN REINFORCED CURTAIN WALL
SCALE: 1/4" = 1'-0"

ANCHOR REQUIREMENTS TABLE (SINGLE SPAN REINFORCED CURTAIN WALL)

OPENING TYPE (SUBSTRATE)	FRAME/CLIP TO OPENING FASTENER TYPE	MINIMUM EMBED	MINIMUM EDGE DIST.
F-PERIMETER ANCHOR SCREWS			
MIN. 16 GA. 50 KSI METAL STUD	1/4-14 GR. 5 SELF TAP/DRILL SCREW	FULL	1/2"
MIN. 2X6 WOOD FRAME OR BUCK (MIN. GR. 2 & G=0.55)	1/4" DIA. GR. 5 COARSE THREAD SCREW	1 1/4"	3/4"
MIN. 1/8" THK A36 STEEL	1/4-14 OR 20 GR. 5 SELF TAP/DRILL SCREW	FULL	1/2"
MIN. 3000 PSI CONCRETE	(1) 3/8" CONCRETE SCREW ANCHOR	2 1/2"	2 1/2"
T & U-ANCHOR SCREWS/BOLTS (VERTICAL MEMBER ENDS)			
MIN. 1/4" THK A36 STEEL	3/8"-16 430 SS HCMS OR GR. 5 CS THREAD FORMING SCREW	FULL	3/4"
	3/8" GR. 5 CS OR 410 SS BOLT WITH LOCK WASHER & NUT	FULL	3/4"
	1/2"-13 300 SS HCMS OR GR. 5 CS THREAD FORMING SCREW	FULL	1"
	1/2" GR. 5 CS OR 410 SS BOLT WITH LOCK WASHER & NUT	FULL	1"
(2) MIN. 3000 PSI CONCRETE	(1) 1/2" CONCRETE SCREW ANCHOR	4"	SEE DETAILS

(1) 3/8" & 1/2" CONCRETE SCREWS SHALL BE SIMPSON STRONG-TIE TITAN HD SCREW ANCHOR (GALVANIZED STEEL).
(2) MINIMUM CONCRETE SLAB THICKNESS FOR PLACEMENT OF "T" & "U" ANCHORS IS 7".

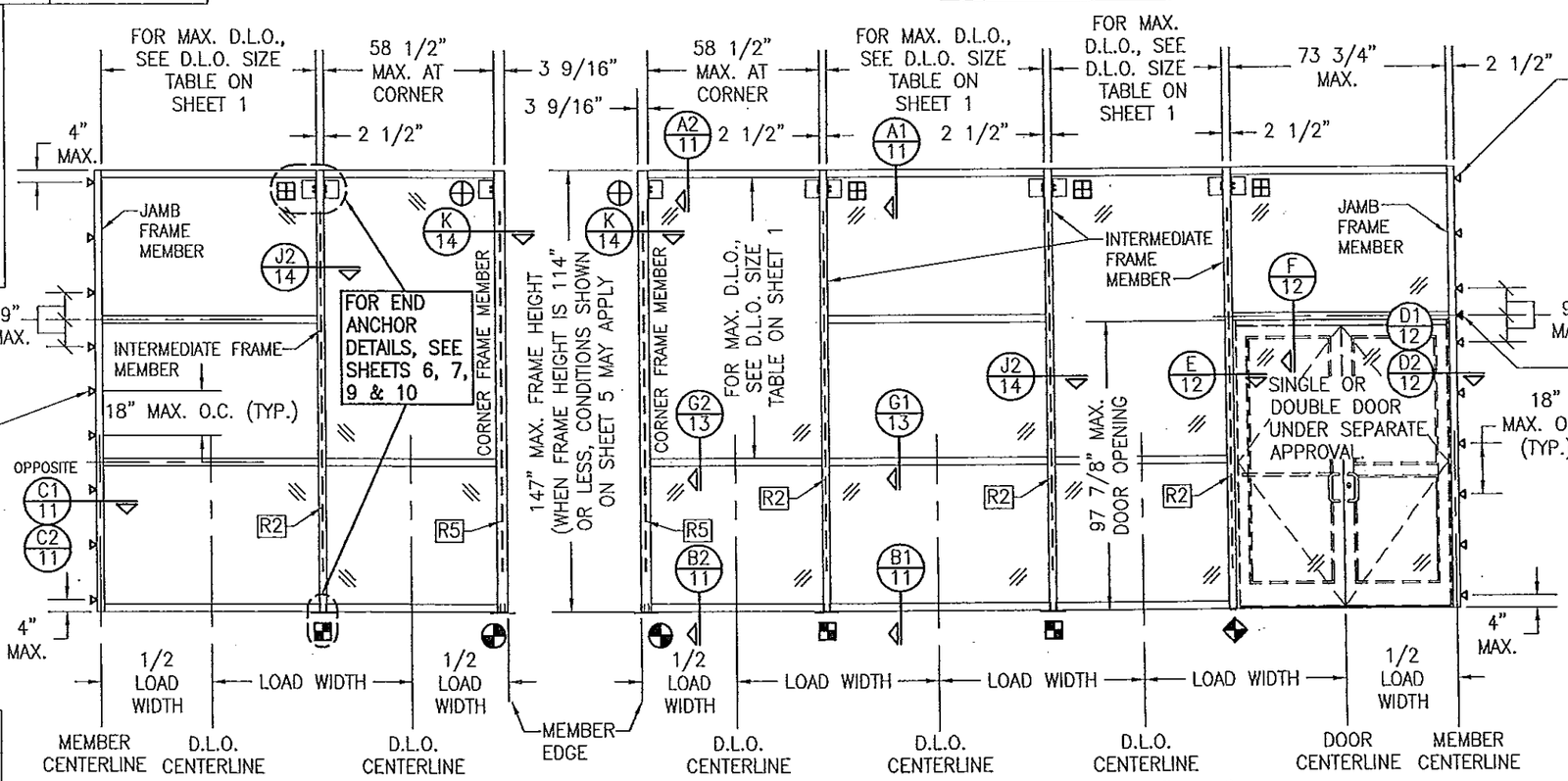

EXTERIOR ELEVATION VIEW "C-C":
SINGLE-SPAN REINFORCED CURTAIN WALL
SCALE: 1/4" = 1'-0"

EXTERIOR ELEVATION VIEW "D-D":
SINGLE-SPAN REINFORCED CURTAIN WALL
SCALE: 1/4" = 1'-0"

WARREN W. SCHAEFER LICENSE No. 44135 STATE OF FLORIDA PROFESSIONAL ENGINEER

DRAWN BY: W.W.S.	CHECKED BY: W.W.S.
PLOT: 1=48	DATE: 02/14/12

NO.	REVISION DESCRIPTION	BY	DATE

DRAWING TITLE: 7 13/16" DEEP 1600 SYSTEM 1 CURTAIN WALL (L.M.I.)

MANUFACTURER: KAWNEER COMPANY, INC. 555 GUTHRIDGE COURT NORCROSS, GA 30092 770-449-5555

CONSULTANTS: W. W. SCHAEFER ENGINEERING & CONSULTING, P.A. (CA 6809) 7480 150TH COURT NORTH PALM BEACH GARDENS, FL 33418 PHONE: 561-744-3424

CERTIFICATION: JUN 19 2012 WARREN W. SCHAEFER P.E. LIC. NO. 44135

DRAWING NO. 1789 REV.

SHEET NO. 4 OF 18

ALLOWABLE DESIGN PRESSURE (SINGLE SPAN NON-REINFORCED CURTAIN WALL)

MAXIMUM MULLION SPAN (IN.)	MAXIMUM LOAD WIDTH (IN.)	ALLOWABLE PRESSURE (POS & NEG PSF)
114	76 1/4	72.0
	72	76.2
	66	83.2
	61	90.0
108	76 1/4	76.0
	72	80.5
	66	87.8
	64	90.0
102	76 1/4	80.5
	72	85.2
	68	90.0
96	76 1/4	85.5
	72	90.0
90	76 1/4	90.0

NOTES:
1. SEE ELEVATION FOR DIMENSIONING OF LOAD WIDTH.
2. PRESSURES SHOWN ARE SPECIFIC TO EACH INDIVIDUAL MULLION SUPPORT AREA. ALLOWABLE PRESSURE MAY VARY FROM BAY TO BAY AS DICTATED BY EACH INDIVIDUAL MULLION CONDITION.
3. LESSER OF PRESSURES STATED IN THIS TABLE & THE ALLOWABLE GLASS PRESSURE, AS SHOWN ON SHEET 1, SHALL CONTROL AS ALLOWABLE FOR THE WALL ASSEMBLY.

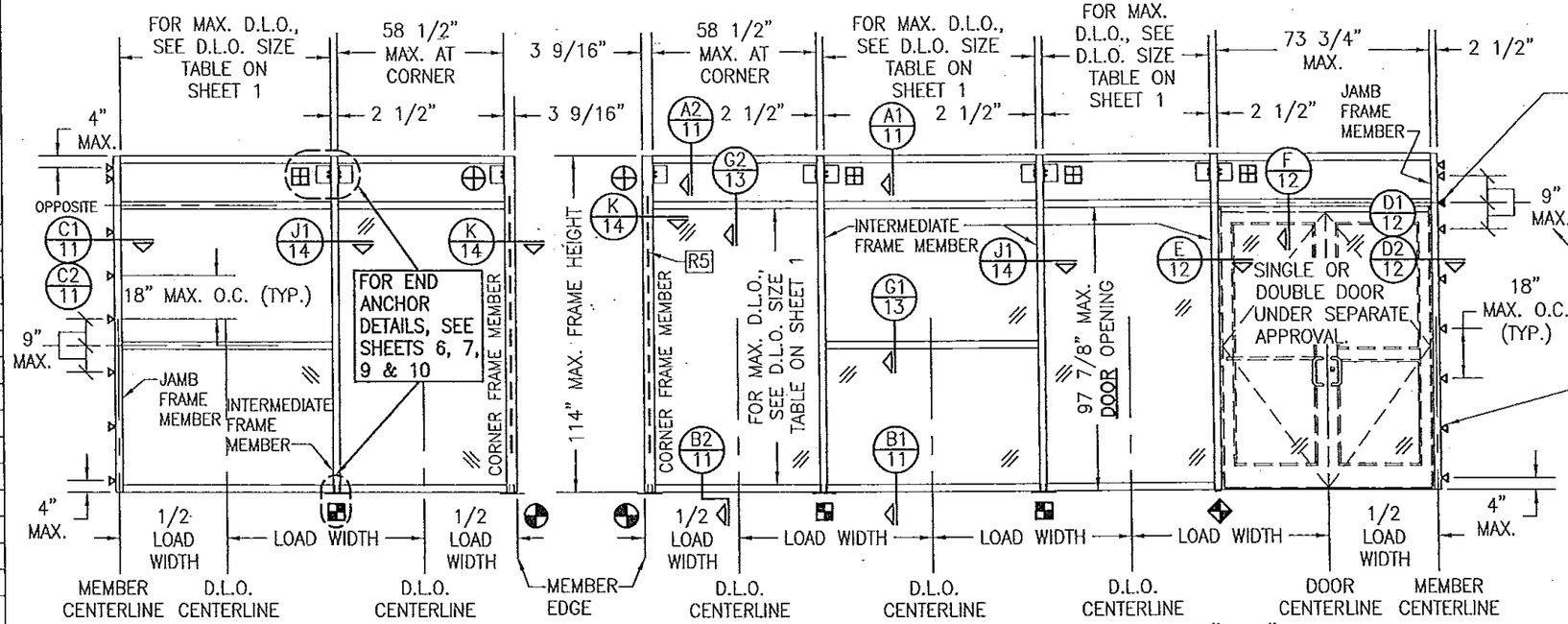

EXTERIOR ELEVATION VIEW "E-E":
SINGLE-SPAN NON-REINFORCED CURTAIN WALL WITH CONTINUOUS SIDE JAMB FRAME F-ANCHOR
SCALE: 1/4" = 1'-0"

EXTERIOR ELEVATION VIEW "F-F":
SINGLE-SPAN NON-REINFORCED CURTAIN WALL WITH CONTINUOUS SIDE JAMB FRAME F-ANCHOR
SCALE: 1/4" = 1'-0"

NOTES APPLICABLE TO SINGLE-SPAN NON-REINFORCED CURTAIN WALLS

1. THERE IS NO LIMIT TO THE NUMBER OF SECTIONS HORIZONTALLY PROVIDING THE OPENING IS DESIGNED TO SUPPORT THE LOADS TRANSFERED FROM THE WALL SYSTEM.
2. THE SINGLE-SPAN ELEVATION SHOWN SHOWS ONE DOOR SECTION. MULTIPLE DOOR SECTIONS MAY OCCUR SIDE-BY SIDE IN ONE WALL SYSTEM PROVIDING ALL REQUIREMENTS WITHIN THIS DRAWING ARE MET & PROPER LOAD WIDTH (DISTANCE BETWEEN DOOR CENTERS) IS CONSIDERED WHEN DETERMINING ALLOWABLE DESIGN PRESSURE.
3. ALTHOUGH A DOOR SECTION IS SHOWN AT A SIDE JAMB, THAT SECTION MAY EXIST WITH OR WITHOUT A DOOR & THE DOOR MAY EXIST IN ANY BAY.
4. THE ELEVATION HERE-IN SHOWS T-ANCHORS AT THE BASE OF THE WALL ONLY. THESE ANCHORS MAY ALSO BE USED AT THE TOP OF A WALL IN LIEU OF THE WIND LOAD ANCHORS SHOWN PROVIDING THEY ARE INSTALLED THE SAME AS SHOWN AT THE BASE.
5. REGARDLESS OF FRAME HEIGHT, CORNER FRAME MEMBER MUST BE REINFORCED. REINFORCEMENT SHALL RUN CONTINUOUS & EXTEND TO WITHIN 13 1/2" OF THE FRAME MEMBER ENDS.
6. SIDE JAMB FRAME MEMBERS MAY BE SUPPORTED EITHER BY A CONTINUOUS SIDE JAMB F-PERIMITER ANCHOR OR BY END ANCHORS AS SHOWN.
7. IF BETWEEN 2 DOOR UNITS, THE VERTICAL FRAMING MEMBER SHALL BE REINFORCED. REINFORCEMENT SHALL BEGIN MAXIMUM 12" UP FROM THE SILL & EXTEND MINIMUM 12" PAST THE DOOR HEAD FRAME.

PRODUCT REVISED as complying with the Florida Building Code Acceptance No 14-0430.23 Expiration Date 06/22/2016 By Miami-Dade Product Control

PRODUCT REVISED as complying with the Florida Building Code Acceptance No 12-0622.07 Expiration Date 06/22/2016 By Miami-Dade Product Control

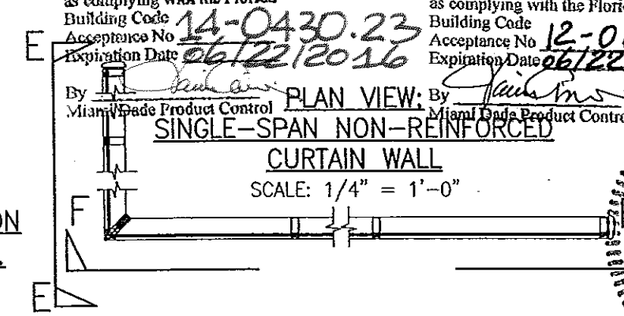

PLAN VIEW:
SINGLE-SPAN NON-REINFORCED CURTAIN WALL
SCALE: 1/4" = 1'-0"

ANCHOR REQUIREMENTS TABLE (SINGLE SPAN NON-REINFORCED CURTAIN WALL)

OPENING TYPE (SUBSTRATE)	FRAME/CLIP TO OPENING FASTENER TYPE	MINIMUM EMBED	MINIMUM EDGE DIST.
F-PERIMETER ANCHOR SCREWS			
MIN. 16 GA. 50 KSI METAL STUD	1/4-14 GR. 5 SELF TAP/DRILL SCREW	FULL	1/2"
MIN. 2X6 WOOD FRAME OR BUCK (MIN. GR. 2 & G=0.55)	1/4" DIA. GR. 5 COARSE THREAD SCREW	1 1/4"	3/4"
MIN. 1/8" THK A36 STEEL	1/4-14 OR 20 GR. 5 SELF TAP/DRILL SCREW	FULL	1/2"
MIN. 3000 PSI CONCRETE	(1) 3/8" CONCRETE SCREW ANCHOR	2 1/2"	2 1/2"
T, F & U-ANCHOR SCREWS/BOLTS (VERTICAL MEMBER ENDS)			
MIN. 1/4" THK A36 STEEL	3/8"-16 430 SS HCMS OR GR. 5 CS THREAD FORMING SCREW	FULL	3/4"
	3/8" GR. 5 CS OR 410 SS BOLT WITH LOCK WASHER & NUT	FULL	3/4"
MIN. 1/8" THK A36 STEEL	1/4-14 OR 20 GR. 5 SELF TAP/DRILL SCREW	FULL	1/2"
(2) MIN. 3000 PSI CONCRETE	(1) 3/8" CONCRETE SCREW ANCHOR	3 1/4"	SEE DETAILS
MIN. 2X6 WOOD FRAME OR BUCK (MIN. GR. 3 & G=0.55)	5/16" DIA. GR. 5 COARSE THREAD SCREW	1 1/4"	3/4"
MIN. 16 GA. 50 KSI METAL STUD	1/4-14 GR. 5 SELF TAP/DRILL SCREW	FULL	1/2"

(1) 3/8" CONCRETE SCREWS SHALL BE SIMPSON STRONG-TIE TITAN HD SCREW ANCHOR (GALVANIZED STEEL).
(2) MINIMUM CONCRETE SLAB THICKNESS FOR PLACEMENT OF "T", "F" & "U" ANCHORS IS 5 1/2".

SEE "FREE SPAN JAMB PERIMETER SEALANT NOTE" ON SHEET 1.

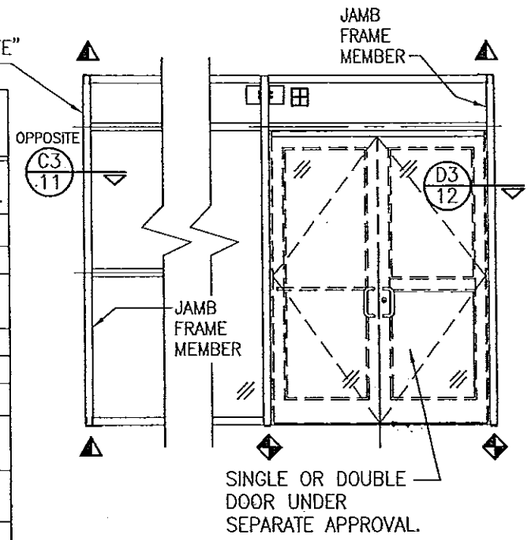

ALTERNATE SIDE JAMB FRAME CONDITION (SUPPORTED BY END F-ANCHORS VS. CONTINUOUS SIDE F-ANCHORS)
SCALE: 1/4" = 1'-0"

ALL CONDITIONS SHOWN IN THE MAIN ELEVATIONS OF THIS SHEET SHALL EQUALLY APPLY TO THIS SIDE JAMB CONDITION.

NOTE: INFORMATION ON THIS SHEET APPLIES TO ELEVATIONS ON THIS SHEET ONLY.

DRAWN BY: W.W.S.	CHECKED BY: W.W.S.
PLOT: 1=48	DATE: 02/14/12

NO.	REVISION DESCRIPTION	BY	DATE

DRAWING TITLE: 7 13/16" DEEP 1600 SYSTEM 1 CURTAIN WALL (L.M.I.)

MANUFACTURER: KAWNEER COMPANY, INC. 555 GUTHRIDGE COURT NORCROSS, GA 30092 770-449-5555

CONSULTANTS: W. W. SCHAEFER ENGINEERING & CONSULTING, P.A. (CA 6809) 7480 150TH COURT NORTH PALM BEACH GARDENS, FL 33418 PHONE: 561-744-3424

CERTIFICATIONS: WARREN W. SCHAEFER, P.E. LICENSE No. 44135 STATE OF FLORIDA PROFESSIONAL ENGINEER
JUN 19 2012
WARREN W. SCHAEFER, P.E. P.E. NO. 44135

DRAWING NO. 1789 REV.

SHEET NO. 5 OF 18

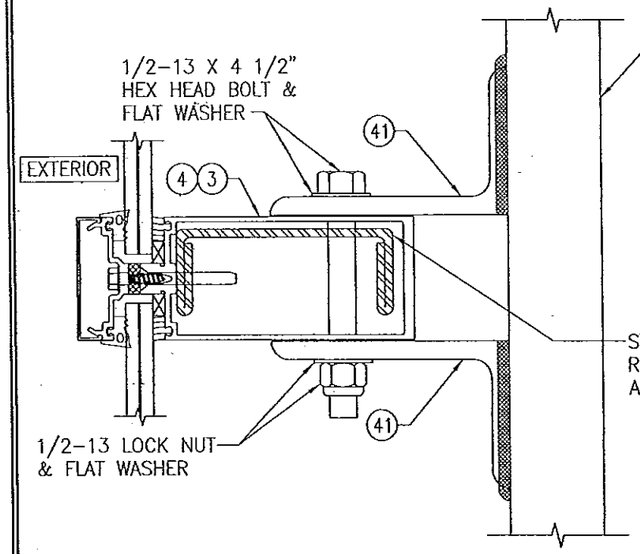

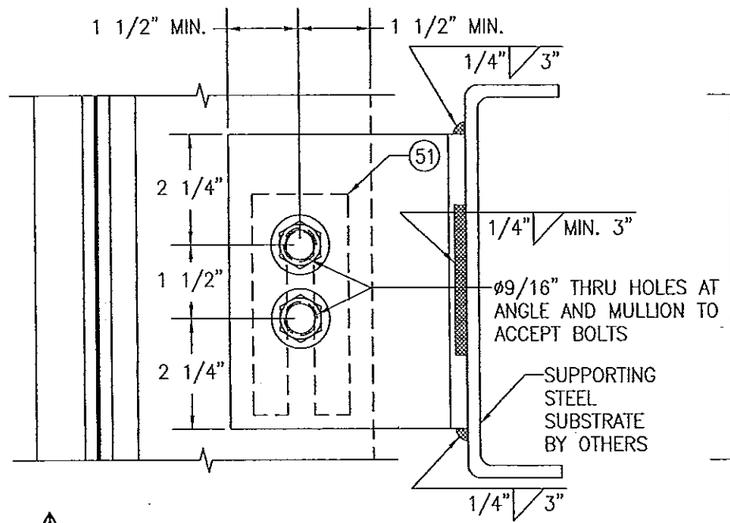

⚠ STANDARD DEAD LOAD ANCHOR

SCALE: 1/3 FULL

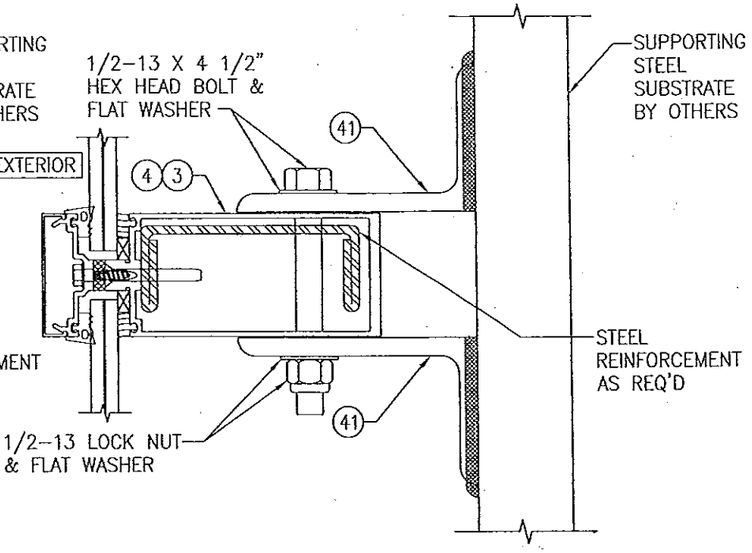

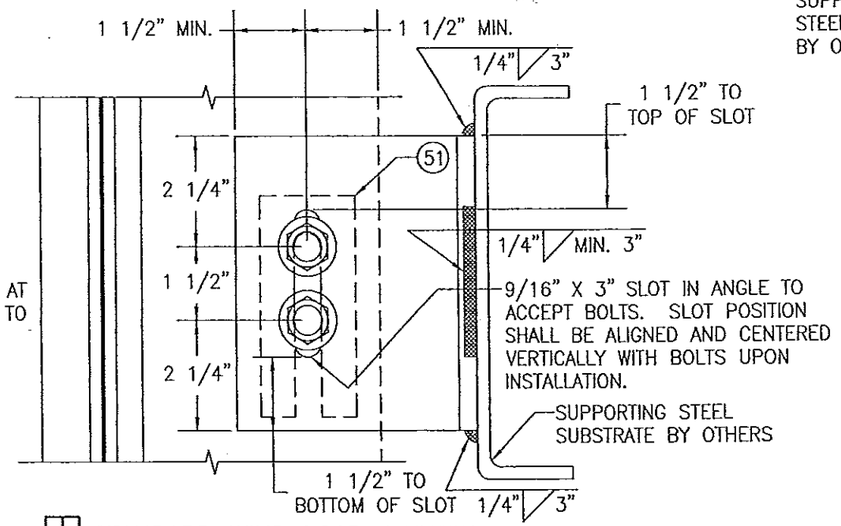

⊞ STANDARD WIND LOAD ANCHOR

SCALE: 1/3 FULL

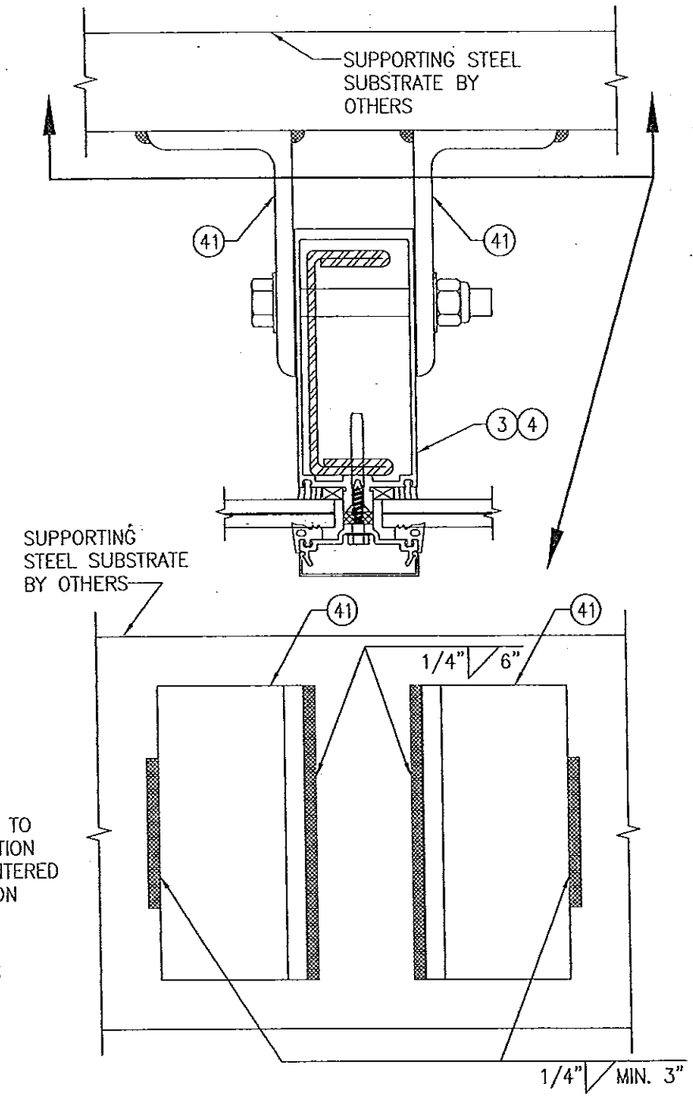

ALTERNATE WELD DETAIL FOR WIND & DEAD LOAD ANCHORS

SCALE: 1/3 FULL

NOTE: ALL 1/2" BOLTS CONNECTING ANGLES TO MULLIONS SHALL BE GRADE 5 STEEL OR 300 SERIES STAINLESS STEEL.

PRODUCT REVISED
as complying with the Florida
Building Code
Acceptance No 14-0430.23
Expiration Date 06/22/2016
By
Miami Dade Product Control

PRODUCT REVISED
as complying with the Florida
Building Code
Acceptance No 12-0622.07
Expiration Date 06/22/2016
By
Miami Dade Product Control

WARREN W. SCHAEFER ★ ENGINEER ★ LICENSE No. 44135 ★ STATE OF FLORIDA ★ PROFESSIONAL

DRAWN BY: W.W.S.	CHECKED BY: W.W.S.
PLOT: 1=3	DATE: 02/14/12

NO.	REVISION DESCRIPTION	BY	DATE

DRAWING TITLE
7 13/16" DEEP 1600 SYSTEM 1 CURTAIN WALL (L.M.I.)

MANUFACTURER
KAWNEER COMPANY, INC.
555 GUTHRIDGE COURT
NORCROSS, GA 30092
770-449-5555

CONSULTANTS
W. W. SCHAEFER ENGINEERING & CONSULTING, P.A. (CA 6809)
7480 150TH COURT NORTH
PALM BEACH GARDENS, FL 33418
PHONE: 561-744-3424

CERTIFICATION
JUN 19 2012
WARREN W. SCHAEFER, P.E.
P.E. NO. 44135

DRAWING NO. 1789
REV.

SHEET NO. 6 OF 18

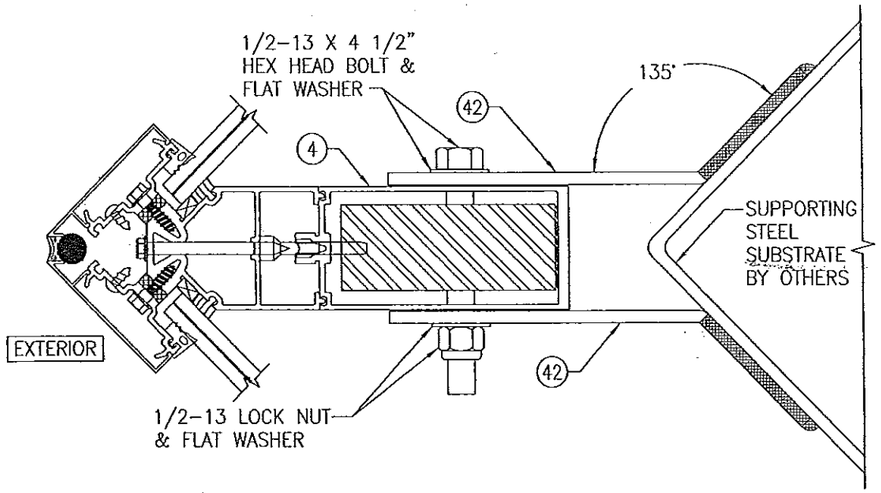

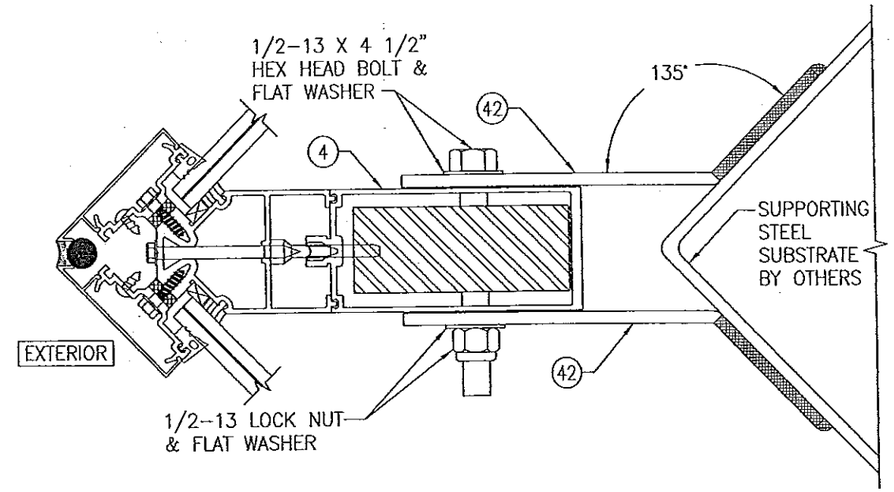

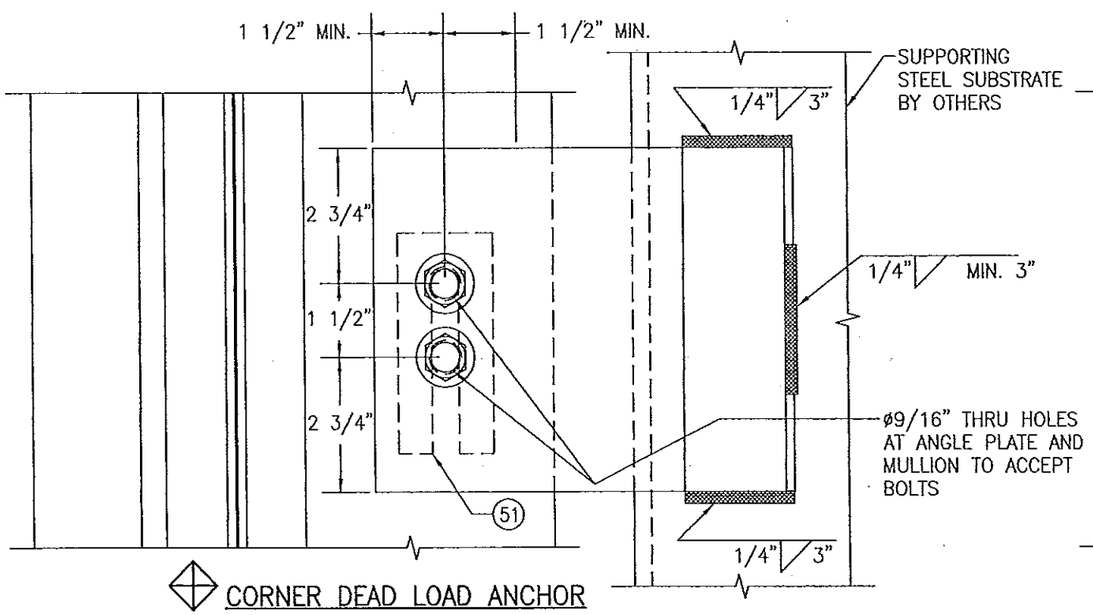

CORNER DEAD LOAD ANCHOR
SCALE: 1/3 FULL

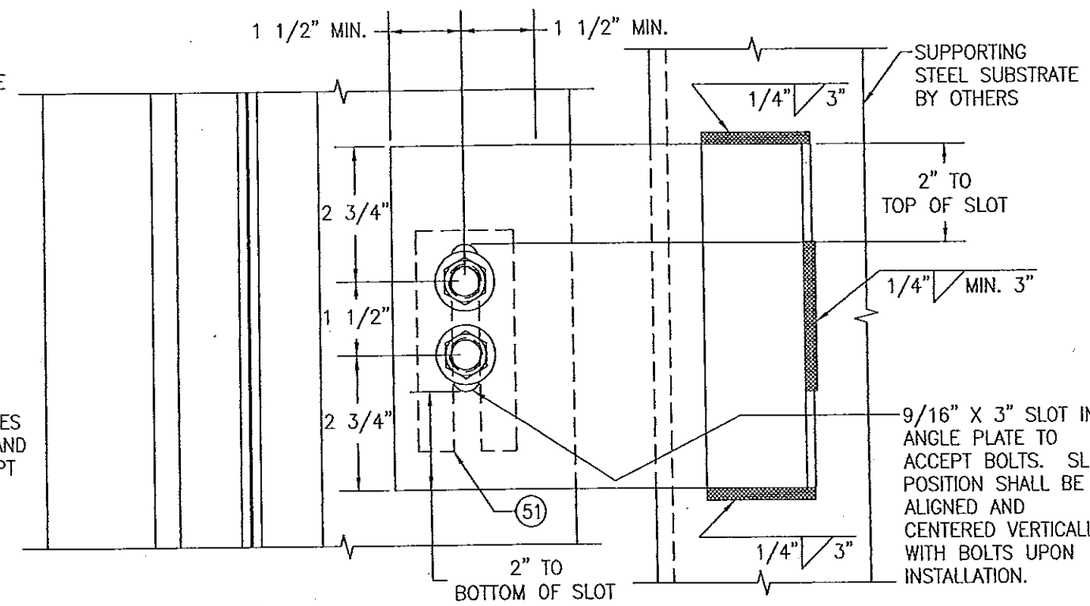

CORNER WIND LOAD ANCHOR
SCALE: 1/3 FULL

NOTE: ALL 1/2" BOLTS CONNECTING ANGLES TO MULLIONS SHALL BE GRADE 5 STEEL OR 300 SERIES STAINLESS STEEL.

FOR ALTERNATE WELDING OF ANGLES TO SUBSTRATE, SEE "ALTERNATE WELD DETAIL" ON SHEET 6.

PRODUCT REVISED
as complying with the Florida Building Code
Acceptance No 14-0430.23
Expiration Date 06/22/2016
By
Miami Dade Product Control

PRODUCT REVISED
as complying with the Florida Building Code
Acceptance No 12-0622.07
Expiration Date 06/22/2016
By
Miami Dade Product Control

WARREN W. SCHAEFER LICENSE No. 44135 STATE OF FLORIDA PROFESSIONAL ENGINEER

DRAWN BY: W.W.S.	CHECKED BY: W.W.S.
PLOT: 1=3	DATE: 02/14/12

NO.	REVISION DESCRIPTION	BY	DATE

DRAWING TITLE
7 13/16" DEEP 1600 SYSTEM 1 CURTAIN WALL (L.M.I.)

MANUFACTURER
KAWNEER COMPANY, INC.
555 GUTHRIDGE COURT
NORCROSS, GA 30092
770-449-5555

CONSULTANTS
W. W. SCHAEFER ENGINEERING & CONSULTING, P.A. (CA 6809)
7480 150TH COURT NORTH
PALM BEACH GARDENS, FL 33418
PHONE: 561-744-3424

CERTIFICATION
JUN 19 2012
WARREN W. SCHAEFER, P.E.
P.E. NO. 44135

DRAWING NO. 1789
REV.
SHEET NO. 7 OF 18

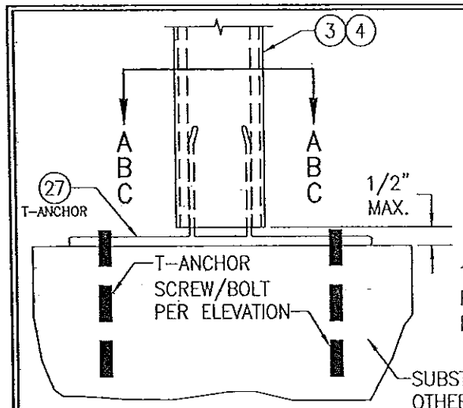

STANDARD T-ANCHOR
SCALE: 1/4 FULL

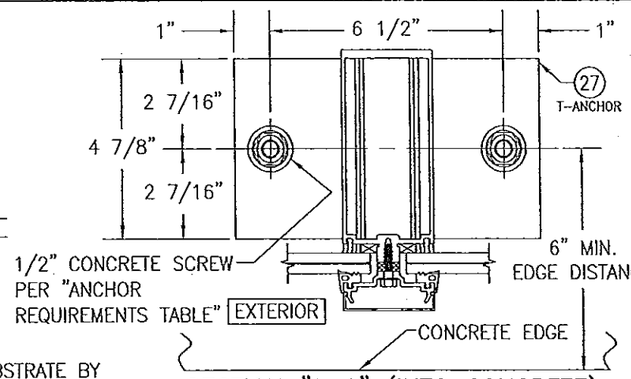

SECTION "A-A" (INTO CONCRETE)
SCALE: 1/4 FULL

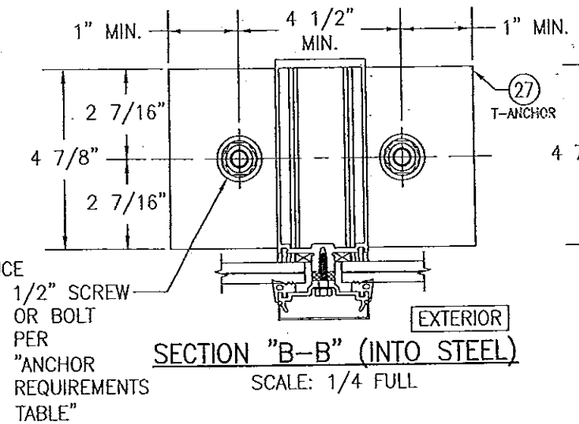

SECTION "B-B" (INTO STEEL)
SCALE: 1/4 FULL

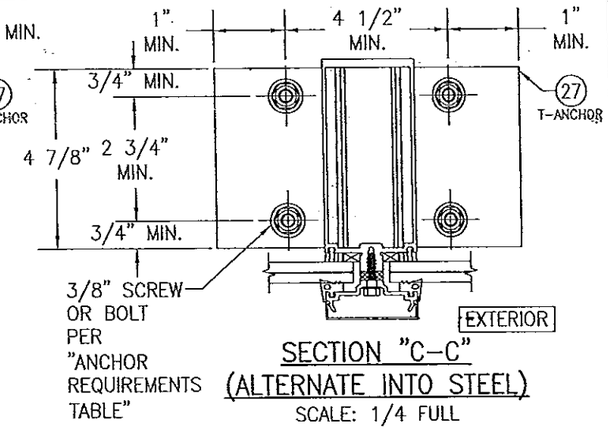

SECTION "C-C" (ALTERNATE INTO STEEL)
SCALE: 1/4 FULL

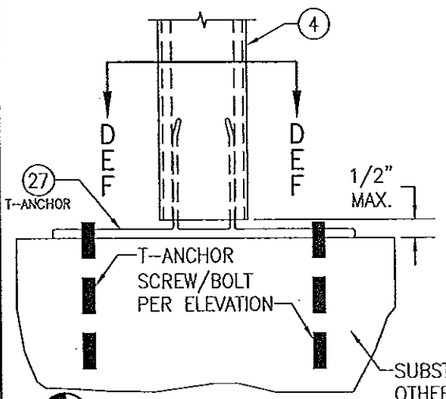

CORNER T-ANCHOR
SCALE: 1/4 FULL

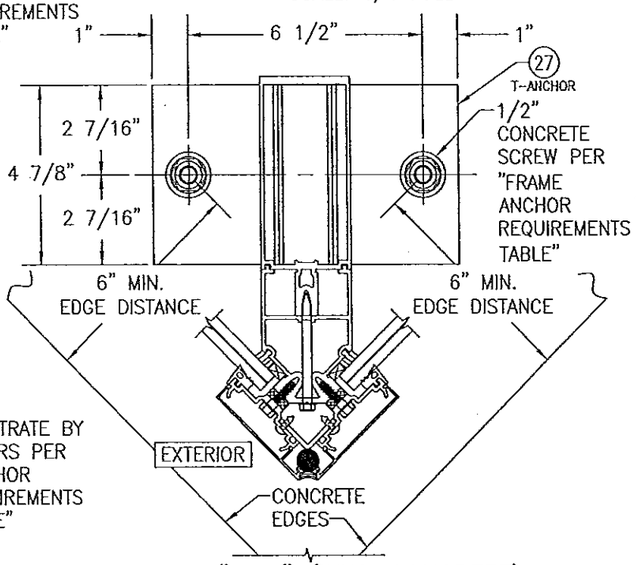

SECTION "D-D" (INTO CONCRETE)
SCALE: 1/4 FULL

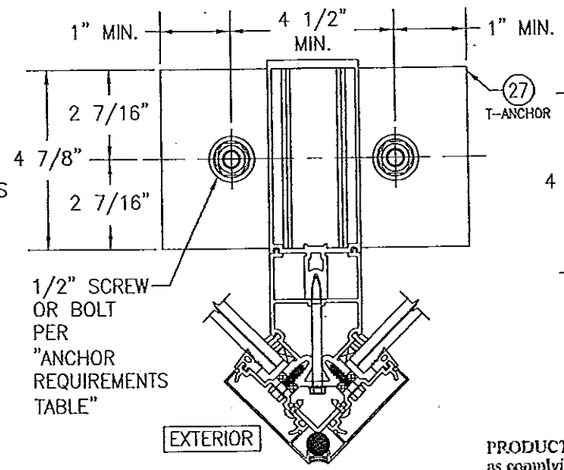

SECTION "E-E" (INTO STEEL)
SCALE: 1/4 FULL

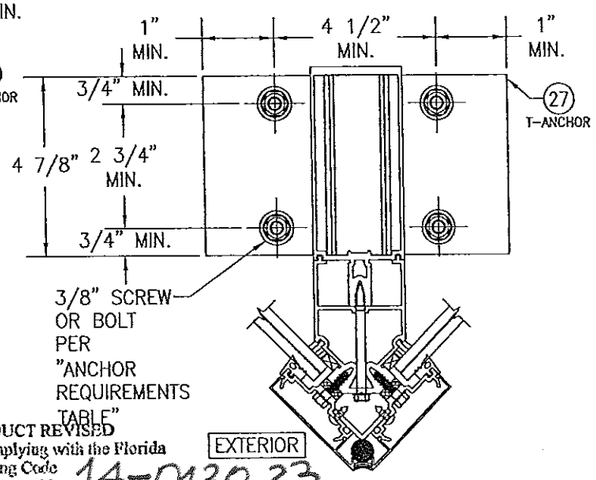

SECTION "F-F" (ALTERNATE INTO STEEL)
SCALE: 1/4 FULL

PRODUCT REVISED
as complying with the Florida Building Code
Acceptance No 14-0430.23
Expiration Date 06/22/2016
By
Miami Dade Product Control

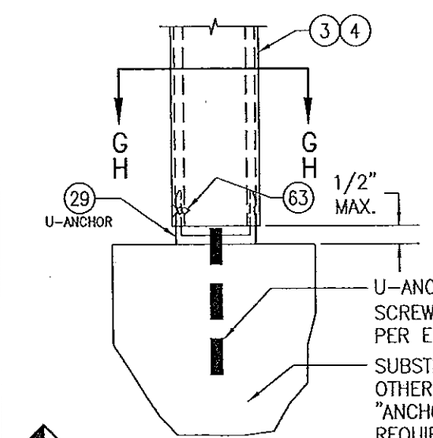

DOOR JAMB U-ANCHOR
SCALE: 1/4 FULL

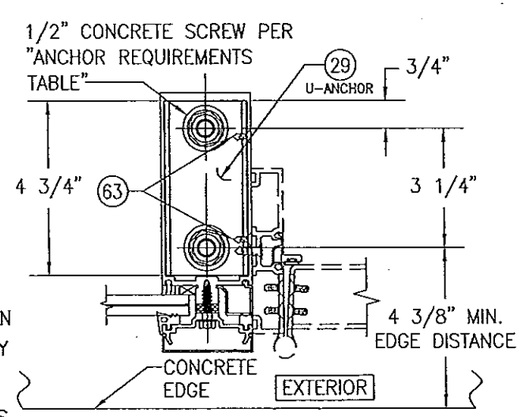

SECTION "G-G" (INTO CONCRETE)
SCALE: 1/4 FULL

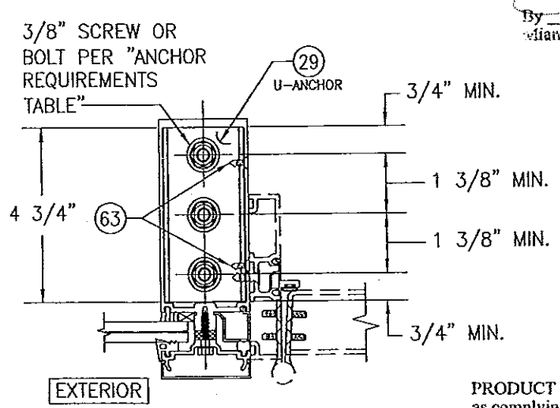

SECTION "H-H" (INTO STEEL)
SCALE: 1/4 FULL

PRODUCT REVISED
as complying with the Florida Building Code
Acceptance No 12-0622.07
Expiration Date 06/22/2016
By
Miami Dade Product Control

THIS SHEET IS DEDICATED TO MULTI-SPAN & REINFORCED SINGLE-SPAN ANCHOR CONDITIONS

WARREN W. SCHAEFER LICENSE No. 44135 STATE OF FLORIDA PROFESSIONAL ENGINEER

JUN 19 2012

DRAWN BY: W.W.S.	CHECKED BY: W.W.S.
PLOT: 1=4	DATE: 02/14/12

NO.	REVISION DESCRIPTION	BY	DATE

DRAWING TITLE
7 13/16" DEEP 1600 SYSTEM 1 CURTAIN WALL (L.M.I.)

MANUFACTURER
KAWNEER COMPANY, INC.
555 GUTHRIDGE COURT
NORCROSS, GA 30092
770-449-5555

CONSULTANTS
W. W. SCHAEFER ENGINEERING & CONSULTING, P.A. (CA 6809)
7480 150TH COURT NORTH
PALM BEACH GARDENS, FL 33418
PHONE: 561-744-3424

CERTIFICATION
WARREN W. SCHAEFER, P.E.
P.E. NO. 44135

DRAWING NO. 1789
REV.
SHEET NO. 8 OF 18

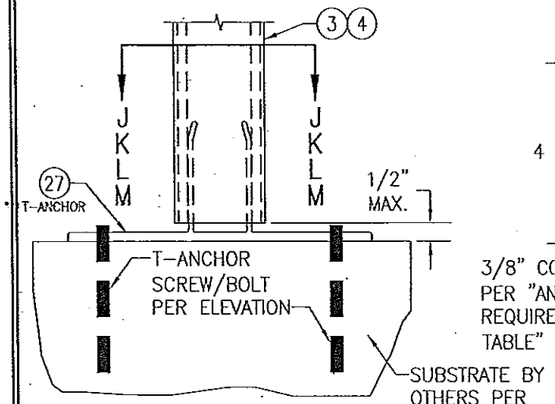

STANDARD T-ANCHOR
SCALE: 1/4 FULL

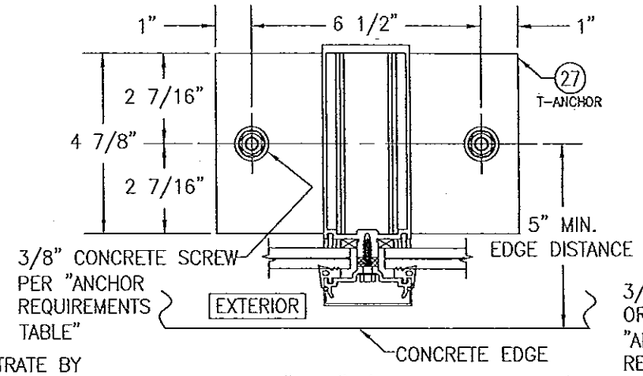

SECTION "J-J" (INTO CONCRETE)
SCALE: 1/4 FULL

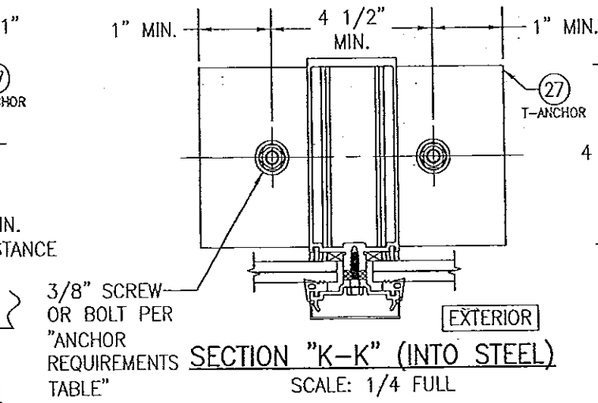

SECTION "K-K" (INTO STEEL)
SCALE: 1/4 FULL

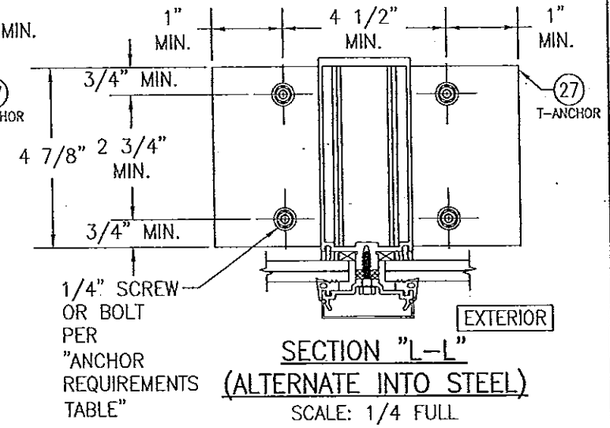

SECTION "L-L"
(ALTERNATE INTO STEEL)
SCALE: 1/4 FULL

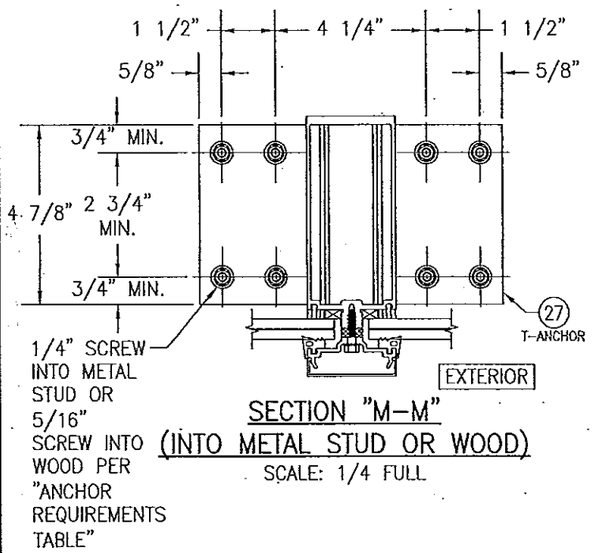

SECTION "M-M"
(INTO METAL STUD OR WOOD)
SCALE: 1/4 FULL

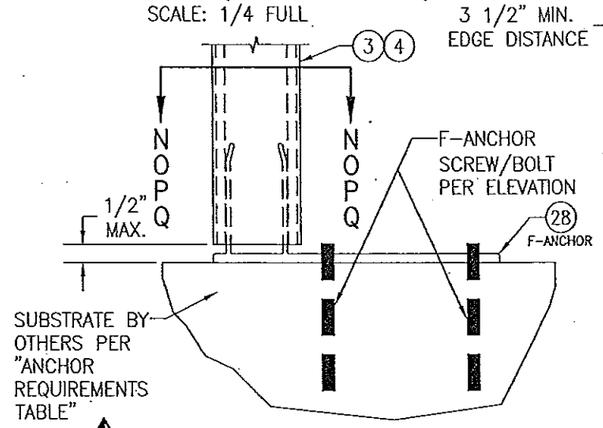

F-ANCHOR (FRAME MEMBER ENDS)
SCALE: 1/4 FULL

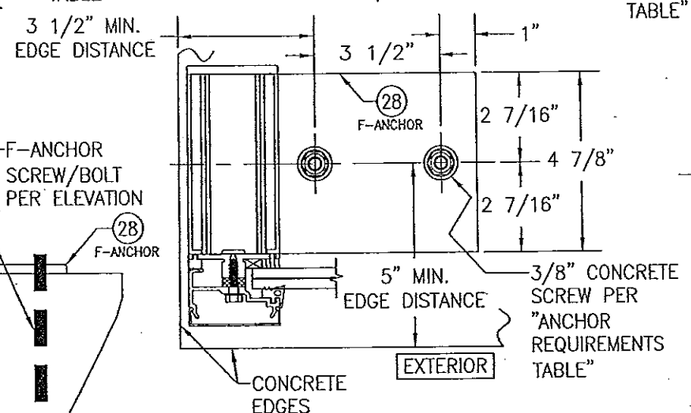

SECTION "N-N" (INTO CONCRETE)
SCALE: 1/4 FULL

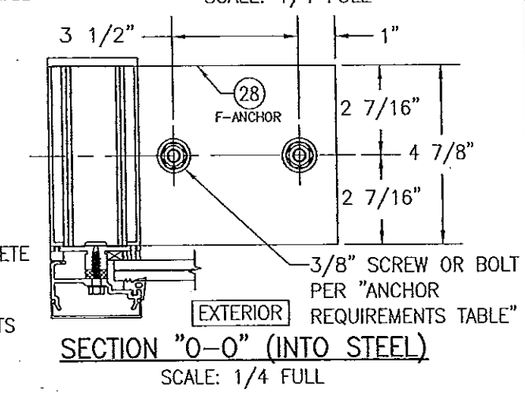

SECTION "O-O" (INTO STEEL)
SCALE: 1/4 FULL

THIS SHEET IS DEDICATED TO NON-REINFORCED SINGLE-SPAN ANCHOR CONDITIONS

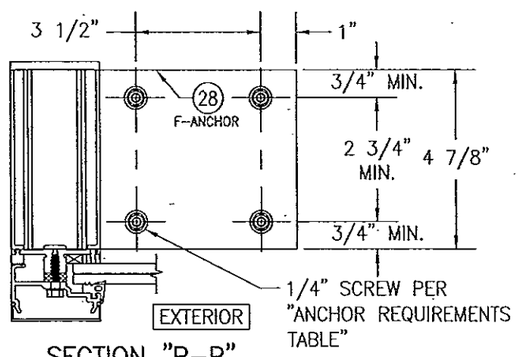

SECTION "P-P"
(ALTERNATE INTO STEEL)
SCALE: 1/4 FULL

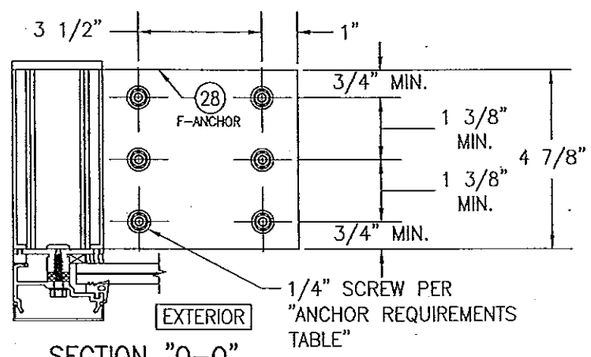

SECTION "Q-Q"
(INTO METAL STUD OR WOOD)
SCALE: 1/4 FULL

PRODUCT REVISED
as complying with the Florida Building Code
Acceptance No 14-0430.23
Expiration Date 06/22/2016
By
Miami Dade Product Control

PRODUCT REVISED
as complying with the Florida Building Code
Acceptance No 12-0622.07
Expiration Date 06/22/2016
By
Miami Dade Product Control

WARREN W. SCHAEFER LICENSE No. 44135 STATE OF FLORIDA PROFESSIONAL ENGINEER

DRAWN BY: W.W.S.	CHECKED BY: W.W.S.
PLOT: 1=4	DATE: 02/14/12

NO.	REVISION DESCRIPTION	BY	DATE

DRAWING TITLE
7 13/16" DEEP 1600 SYSTEM 1 CURTAIN WALL (L.M.I.)

MANUFACTURER
KAWNEER COMPANY, INC.
555 GUTHRIDGE COURT
NORCROSS, GA 30092
770-449-5555

CONSULTANTS
W. W. SCHAEFER ENGINEERING & CONSULTING, P.A. (CA 6809)
7480 150TH COURT NORTH
PALM BEACH GARDENS, FL 33418
PHONE: 561-744-3424

CERTIFICATION
JUN 19 2012
WARREN W. SCHAEFER, P.E.
P.E. NO. 44135

DRAWING NO. 1789
REV.
SHEET NO. 9 OF 18

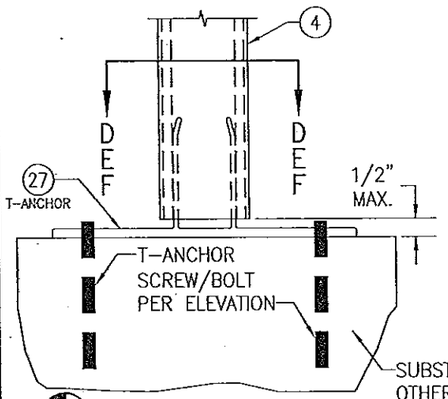

CORNER T-ANCHOR
SCALE: 1/4 FULL

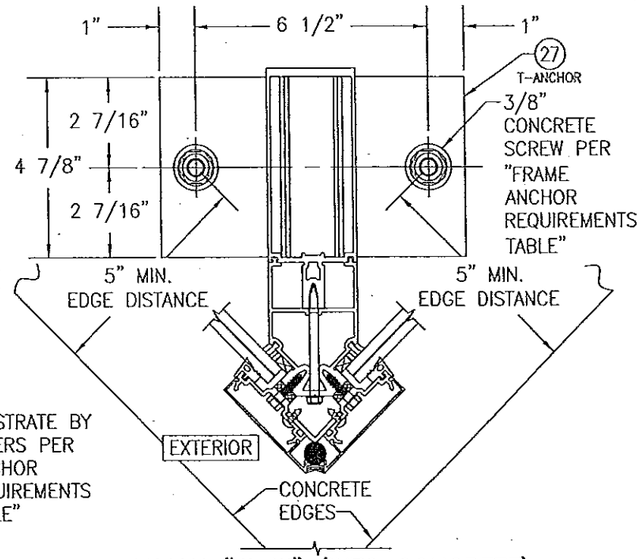

SECTION "W-W" (INTO CONCRETE)
SCALE: 1/4 FULL

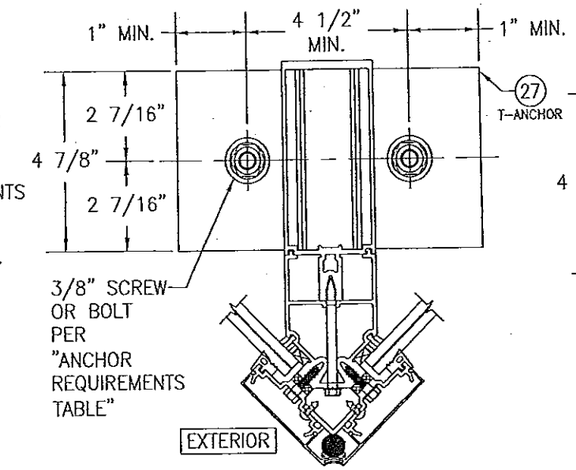

SECTION "X-X" (INTO STEEL)
SCALE: 1/4 FULL

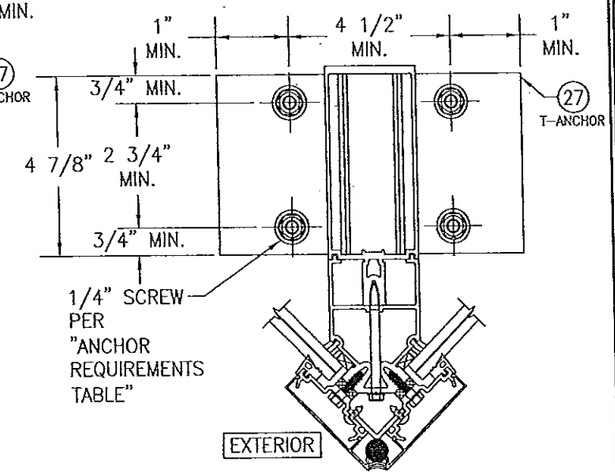

SECTION "Y-Y"
(ALTERNATE INTO STEEL)
SCALE: 1/4 FULL

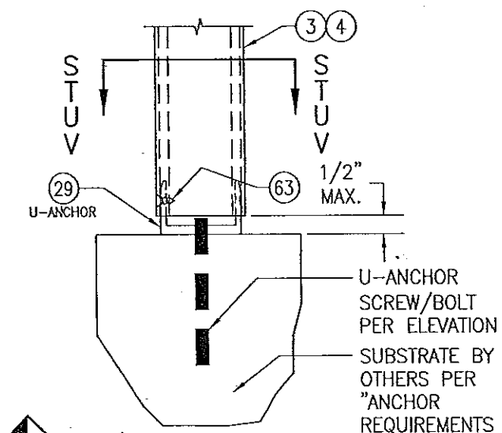

DOOR JAMB U-ANCHOR
SCALE: 1/4 FULL

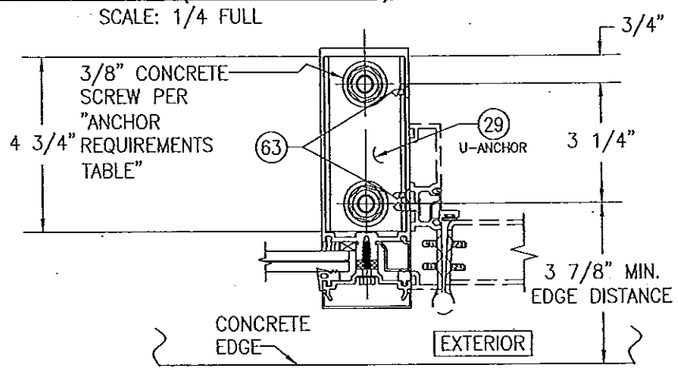

SECTION "S-S"
(INTO CONCRETE AT
INTERMEDIATE MEMBER)
SCALE: 1/4 FULL

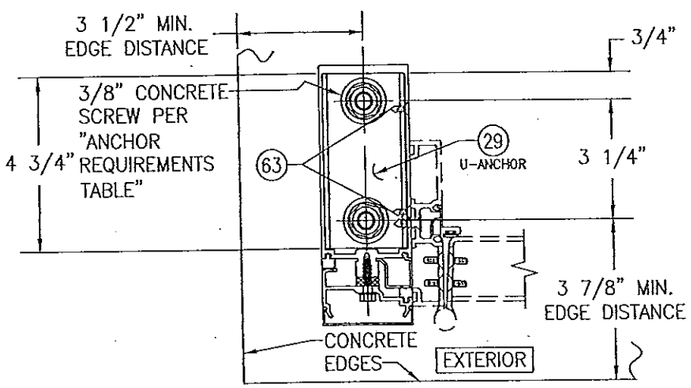

SECTION "T-T"
(INTO CONCRETE AT
PERIMETER SIDE JAMB MEMBER)
SCALE: 1/4 FULL

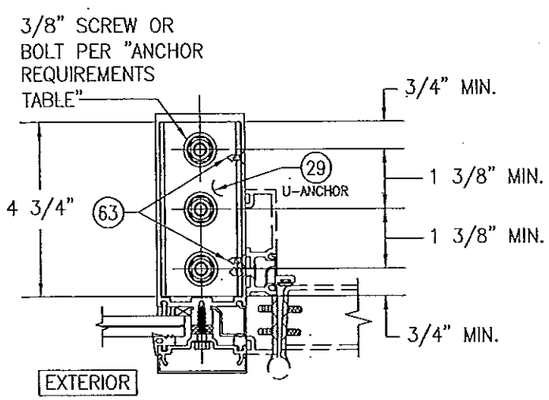

SECTION "U-U" (INTO STEEL)
SCALE: 1/4 FULL

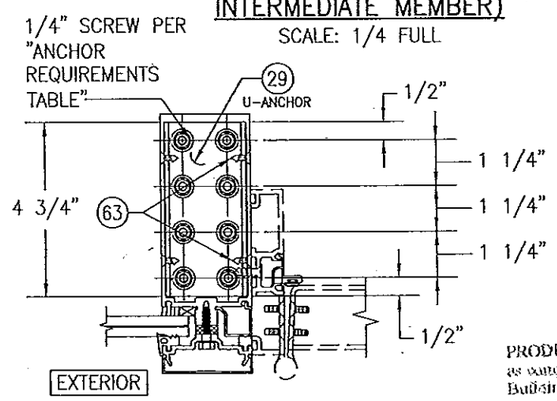

SECTION "V-V"
(INTO METAL STUD OR WOOD)
SCALE: 1/4 FULL

THIS SHEET IS DEDICATED TO NON-REINFORCED SINGLE-SPAN ANCHOR CONDITIONS

PRODUCT REVISED
as complying with the Florida Building Code
Acceptance No. 14-0430.23
Expiration Date 06/22/2016
By
Miami Dade Product Control

PRODUCT REVISED
as complying with the Florida Building Code
Acceptance No. 12-0622.07
Expiration Date 06/22/2016
By
Miami Dade Product Control

WARREN W. SCHAEFER ★ ENGINEER ★ LICENSE No. 44135 ★ STATE OF FLORIDA ★ PROFESSIONAL

DRAWN BY: W.W.S.	CHECKED BY: W.W.S.
PLOT: 1=4	DATE: 02/14/12

NO.	REVISION DESCRIPTION	BY	DATE

DRAWING TITLE
7 13/16" DEEP 1600 SYSTEM 1 CURTAIN WALL (L.M.I.)

MANUFACTURER
KAWNEER COMPANY, INC.
555 GUTHRIDGE COURT
NORCROSS, GA 30092
770-449-5555

CONSULTANTS
W. W. SCHAEFER ENGINEERING & CONSULTING, P.A. (CA 6809)
7480 150TH COURT NORTH
PALM BEACH GARDENS, FL 33418
PHONE: 561-744-3424

CERTIFICATION
JUN 19 2012
WARREN W. SCHAEFER, P.E.
P.E. NO. 44135

DRAWING NO. 1789
REV.
SHEET NO. 10 OF 18

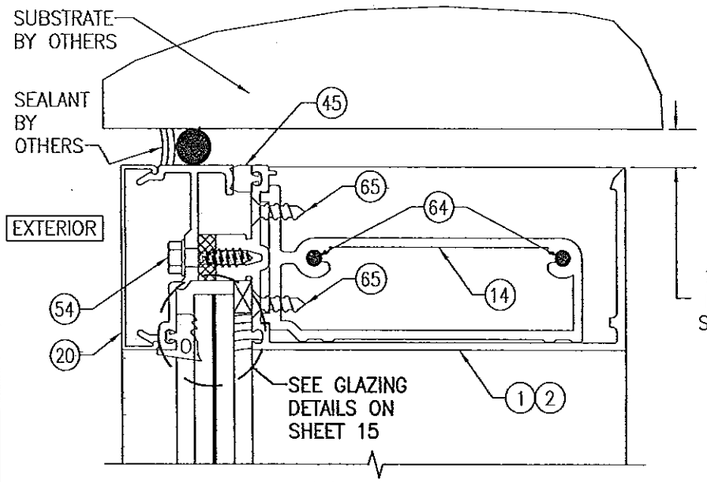

SECTION A1/11
SCALE: 1/2 FULL

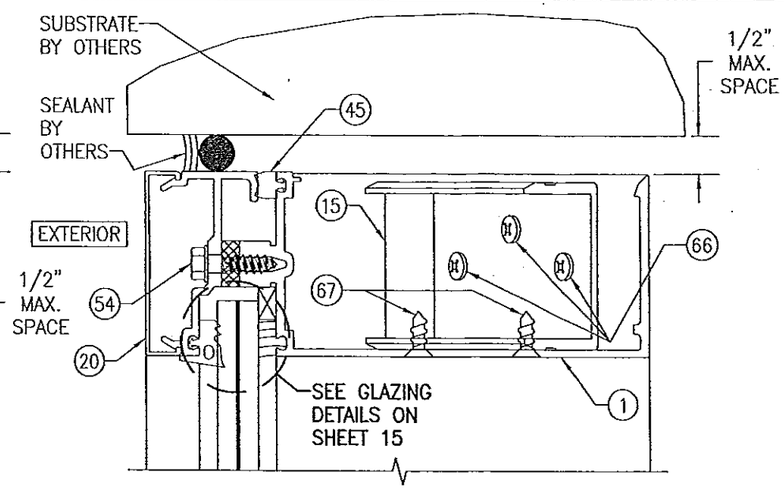

SECTION A2/11
SCALE: 1/2 FULL

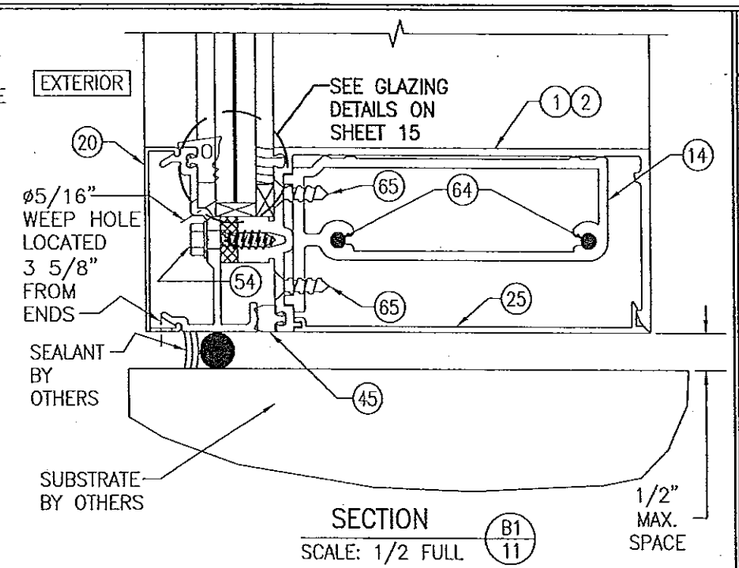

SECTION B1/11
SCALE: 1/2 FULL

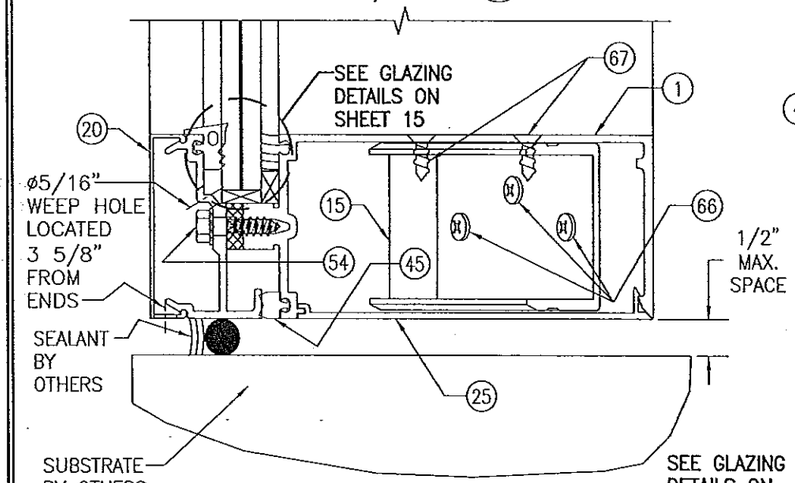

SECTION B2/11
SCALE: 1/2 FULL

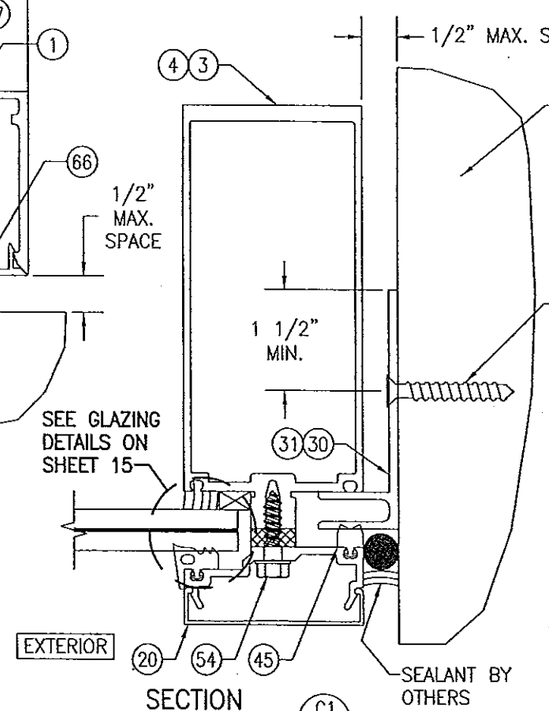

SECTION C1/11
SCALE: 1/2 FULL
(SIDE JAMB F-ANCHOR TO STEEL AND CONCRETE)

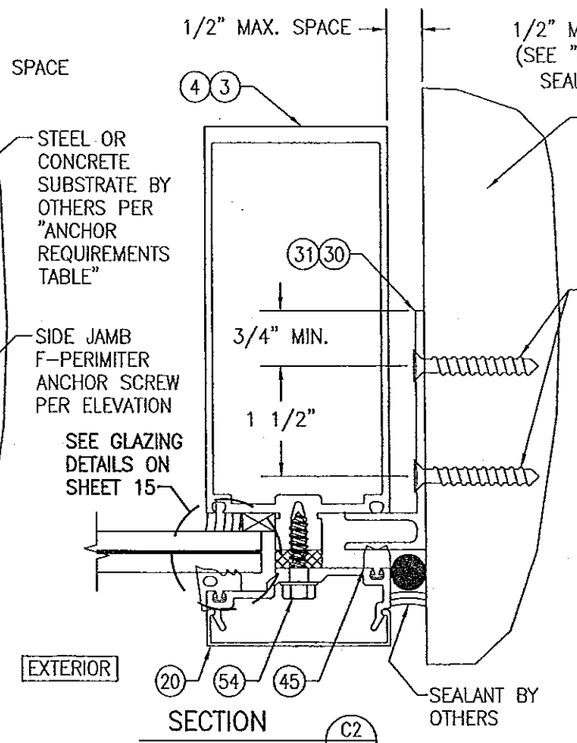

SECTION C2/11
SCALE: 1/2 FULL
(SIDE JAMB F-ANCHOR TO WOOD OR METAL STUD)

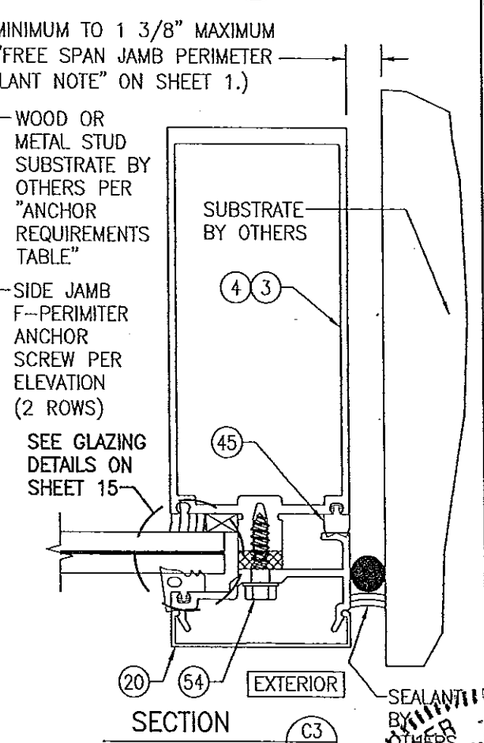

SECTION C3/11
SCALE: 1/2 FULL
(NO SIDE JAMB F-ANCHOR)

PRODUCT REVISED
as complying with the Florida Building Code
Acceptance No 14-0430.23
Expiration Date 06/22/2016
By
Miami Dade Product Control

PRODUCT REVISED
as complying with the Florida Building Code
Acceptance No 120622.07
Expiration Date 06/22/2016
By
Miami Dade Product Control

DRAWN BY: W.W.S.	CHECKED BY: W.W.S.
PLOT: 1=2	DATE: 02/14/12

NO.	REVISION DESCRIPTION	BY	DATE

DRAWING TITLE
7 13/16" DEEP 1600 SYSTEM 1 CURTAIN WALL (L.M.I.)

MANUFACTURER
KAWNEER COMPANY, INC.
555 GUTHRIDGE COURT
NORCROSS, GA 30092
770-449-5555

CONSULTANTS
W. W. SCHAEFER ENGINEERING & CONSULTING, P.A. (CA 6809)
7480 150TH COURT NORTH
PALM BEACH GARDENS, FL 33418
PHONE: 561-744-3424

CERTIFICATION
STATE OF FLORIDA
WARREN W. SCHAEFER, P.E.
P.E. NO. 44135
LICENSE No. 44135
PROFESSIONAL ENGINEER
02/14/2012

DRAWING NO. P1789 REV.

SHEET NO. 11 OF 18

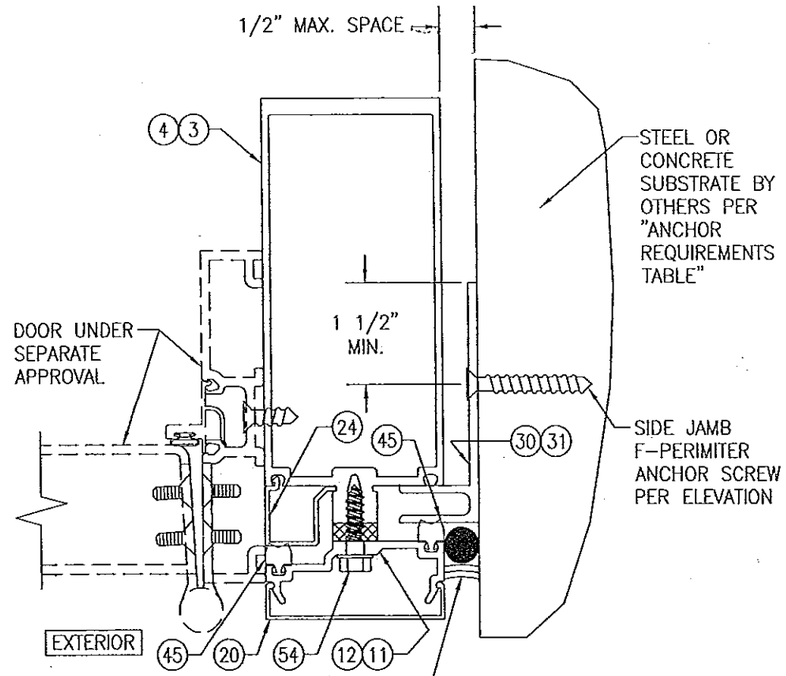

SECTION D1/12
SCALE: 1/2 FULL
(SIDE JAMB F-ANCHOR TO STEEL AND CONCRETE)

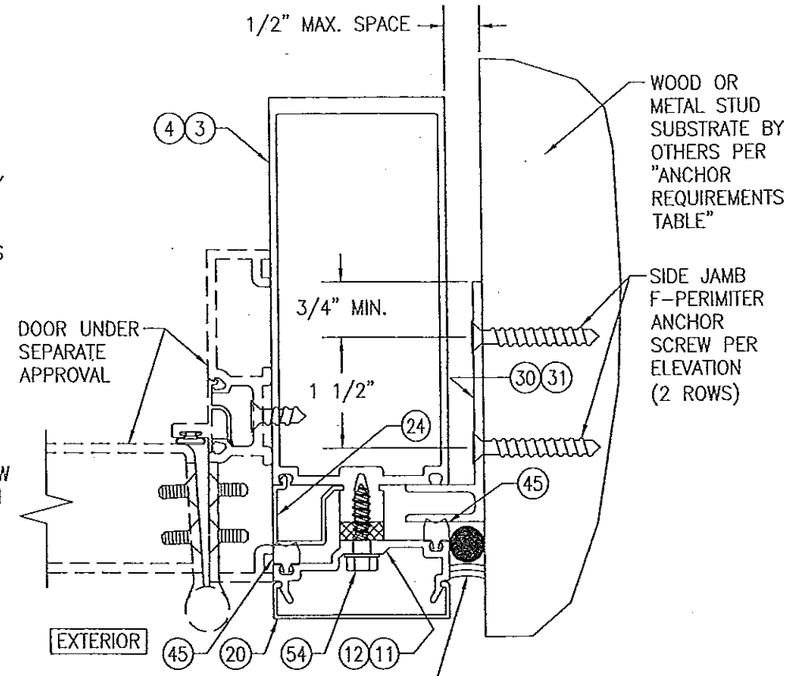

SECTION D2/12
SCALE: 1/2 FULL
(SIDE JAMB F-ANCHOR TO WOOD OR METAL STUD)

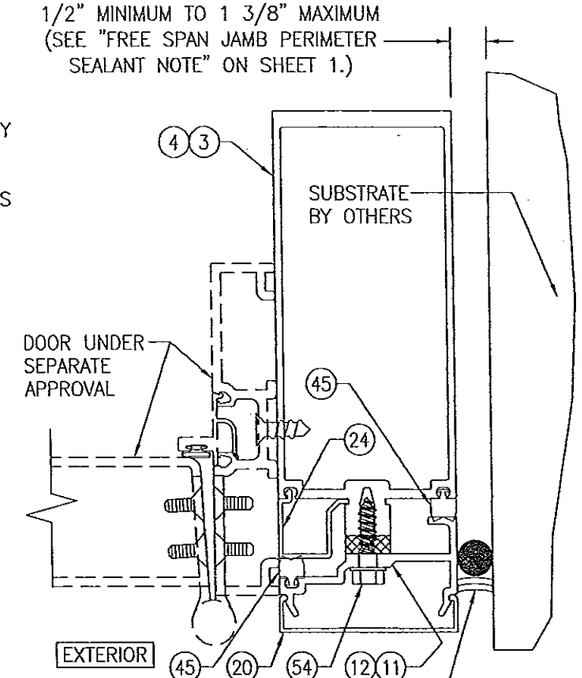

SECTION D3/12
SCALE: 1/2 FULL
(NO SIDE JAMB F-ANCHOR)

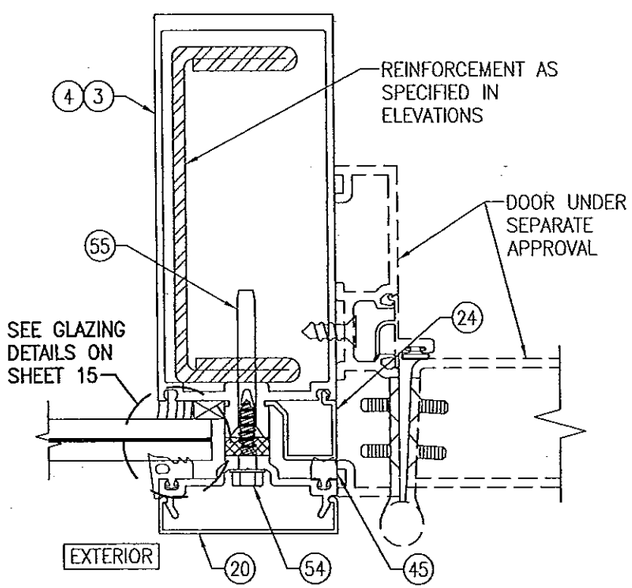

SECTION E/12
SCALE: 1/2 FULL

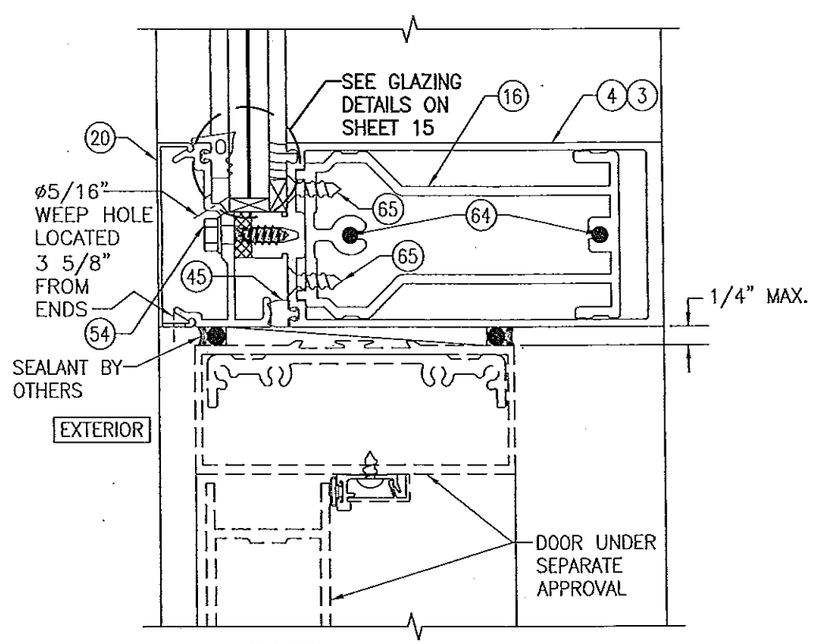

SECTION F/12
SCALE: 1/2 FULL

PRODUCT REVISED
as complying with the Florida Building Code
Acceptance No 11-0430.23
Expiration Date 06/22/2016
By
Miami Dade Product Control

PRODUCT REVISED
as complying with the Florida Building Code
Acceptance No 12-0622.07
Expiration Date 06/22/2016
By
Miami Dade Product Control

WARREN W. SCHAEFER LICENSE No. 44135 STATE OF FLORIDA PROFESSIONAL ENGINEER

DRAWN BY: W.W.S.	CHECKED BY: W.W.S.
PLOT: 1=2	DATE: 02/14/12

NO.	REVISION DESCRIPTION	BY	DATE

DRAWING TITLE
7 13/16" DEEP 1600 SYSTEM 1 CURTAIN WALL (L.M.I.)

MANUFACTURER
KAWNEER COMPANY, INC.
555 GUTHRIDGE COURT
NORCROSS, GA 30092
770-449-5555

CONSULTANTS
W. W. SCHAEFER ENGINEERING & CONSULTING, P.A. (CA 6809)
7480 150TH COURT NORTH
PALM BEACH GARDENS, FL 33418
PHONE: 561-744-3424

CERTIFICATION
JUN 19 2012
WARREN W. SCHAEFER, P.E.
P.E. NO. 44135

DRAWING NO. 1789
REV.
SHEET NO. 12 OF 18

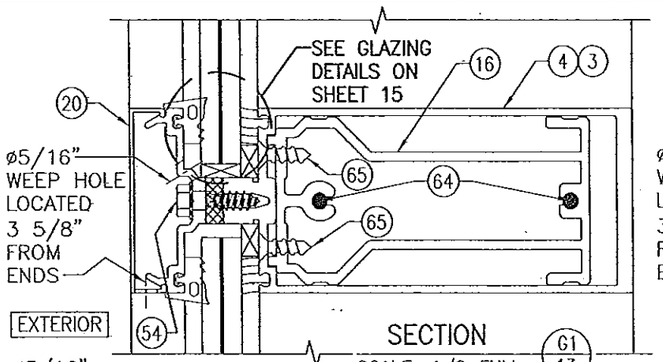

SECTION G1/13
SCALE: 1/2 FULL

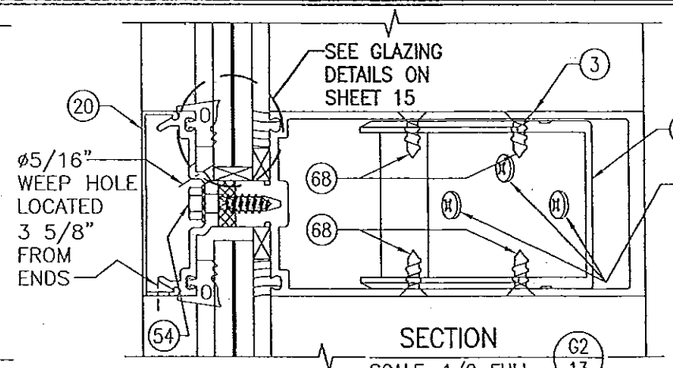

SECTION G2/13
SCALE: 1/2 FULL

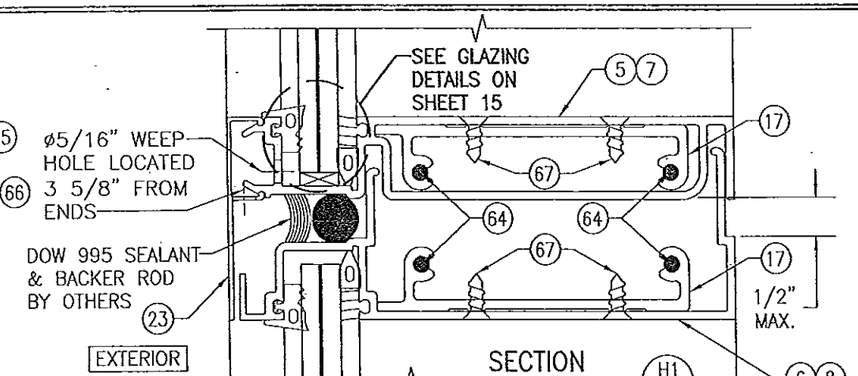

SECTION H1/13
SCALE: 1/2 FULL

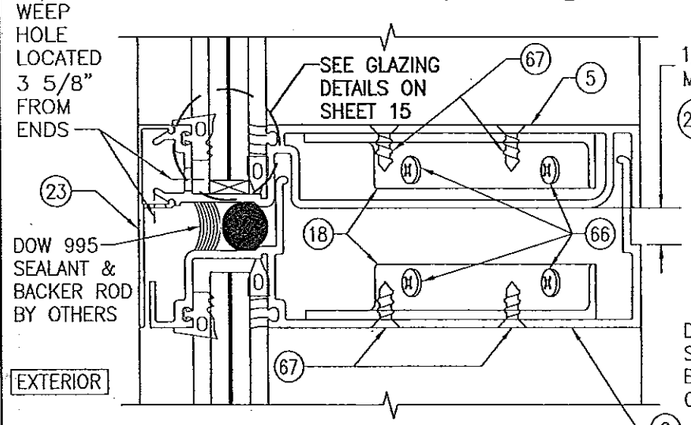

SECTION H2/13
SCALE: 1/2 FULL

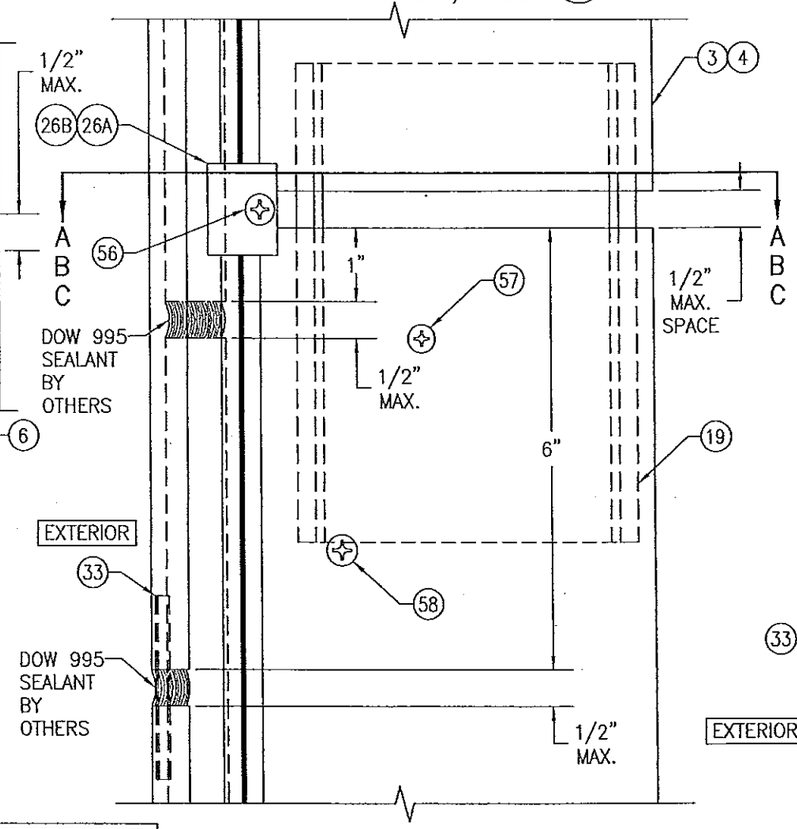

SPLICE JOINT DETAIL

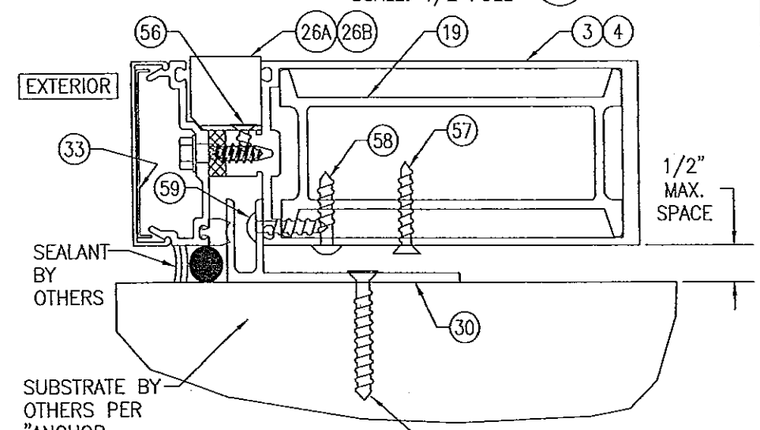

SECTION A-A
(JAMB CONDITION)
(FOR DETAIL NOT SHOWN, SEE SECTION C1/11)

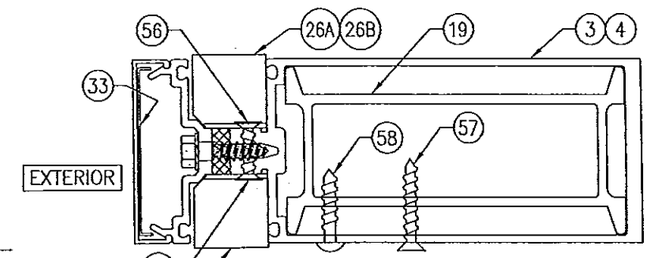

SECTION B-B
(INTERMEDIATE CONDITION)
(FOR DETAIL NOT SHOWN, SEE SECTION J1/14, J2/14, J3/14, J4/14 & J5/14)

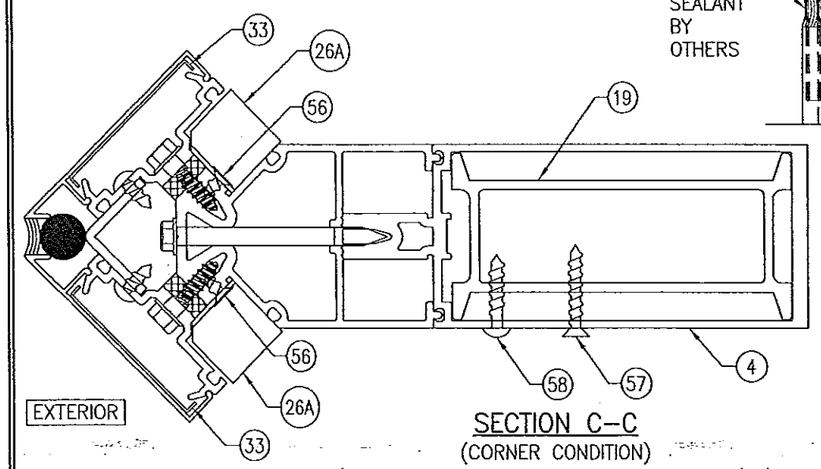

SECTION C-C
(CORNER CONDITION)
(FOR DETAIL NOT SHOWN, SEE SECTION K/14)

PRODUCT REVISED
as complying with the Florida
Building Code
Acceptance No 14-0430.23
Expiration Date 06/22/2016
By
Miami Dade Product Control

PRODUCT REVISED
as complying with the Florida
Building Code
Acceptance No 12-0622.07
Expiration Date 06/22/2016
By
Miami Dade Product Control

WARREN W. SCHAEFER LICENSE No. 44135 STATE OF FLORIDA PROFESSIONAL ENGINEER

DRAWN BY: W.W.S.	CHECKED BY: W.W.S.
PLOT: 1=2	DATE: 02/14/12

NO.	REVISION DESCRIPTION	BY	DATE

DRAWING TITLE
7 13/16" DEEP 1600 SYSTEM 1 CURTAIN WALL (L.M.I.)

MANUFACTURER
KAWNEER COMPANY, INC.
555 GUTHRIDGE COURT
NORCROSS, GA 30092
770-449-5555

CONSULTANTS
W. W. SCHAEFER ENGINEERING & CONSULTING, P.A. (CA 6809)
7480 150TH COURT NORTH
PALM BEACH GARDENS, FL 33418
PHONE: 561-744-3424

CERTIFICATION
JUN 19 2012
WARREN W. SCHAEFER, P.E.
P.E. NO. 44135

DRAWING NO. 1789
REV.
SHEET NO. 13 OF 18

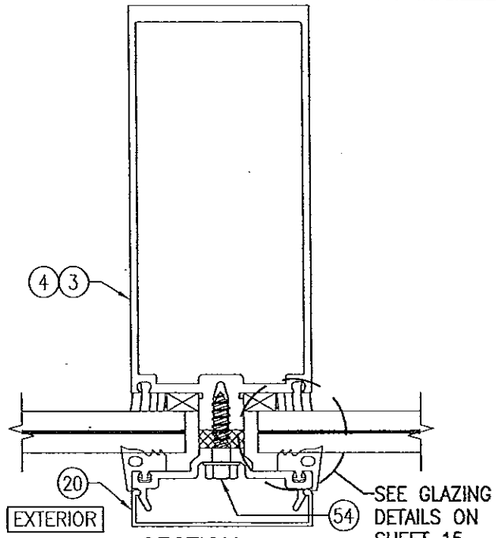

SECTION J1/14
SCALE: 1/2 FULL

VERTICAL FRAME MEMBER WITH NO REINFORCEMENT

I = 13.768 IN^4
S = 4.157 IN^3

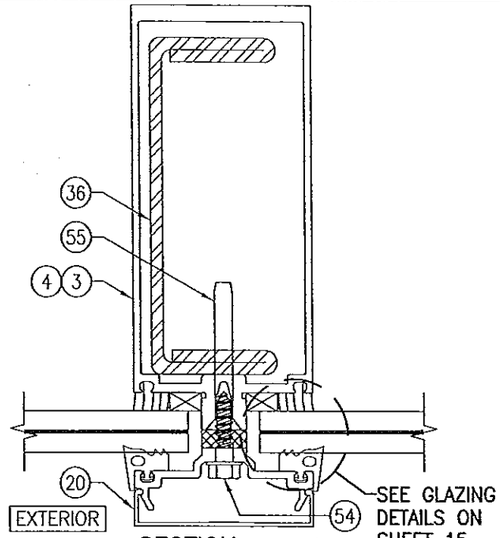

SECTION J2/14
SCALE: 1/2 FULL

VERTICAL FRAME MEMBER WITH REINFORCEMENT R1

I = 30.629 IN^4
S = 8.313 IN^3
(TRANSFORMED SECTION PROPERTIES IN TERMS OF ALUMINUM)

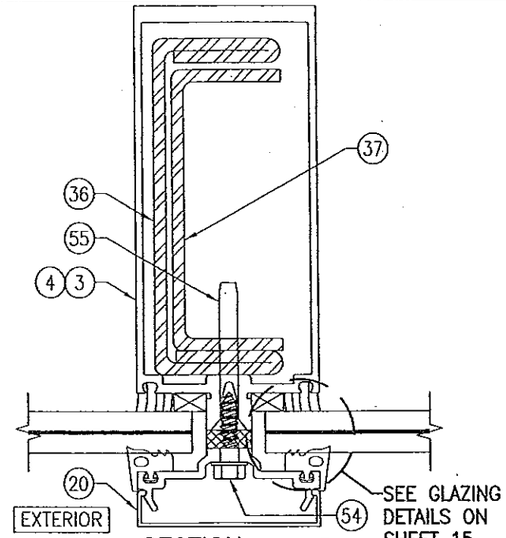

SECTION J3/14
SCALE: 1/2 FULL

VERTICAL FRAME MEMBER WITH REINFORCEMENT R2

I = 37.021 IN^4
S = 9.926 IN^3
(TRANSFORMED SECTION PROPERTIES IN TERMS OF ALUMINUM)

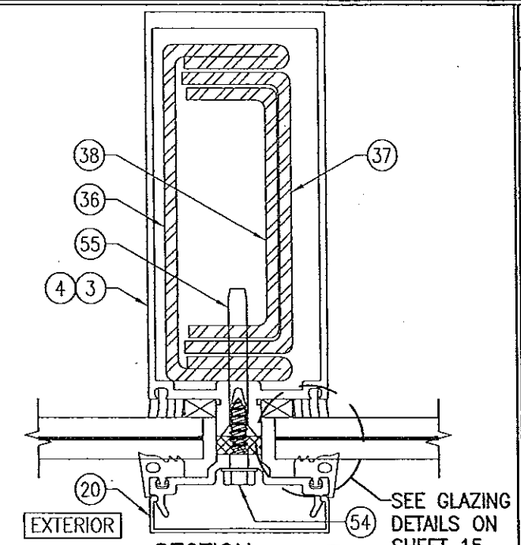

SECTION J4/14
SCALE: 1/2 FULL

VERTICAL FRAME MEMBER WITH REINFORCEMENT R3

I = 41.202 IN^4
S = 11.01 IN^3
(TRANSFORMED SECTION PROPERTIES IN TERMS OF ALUMINUM)

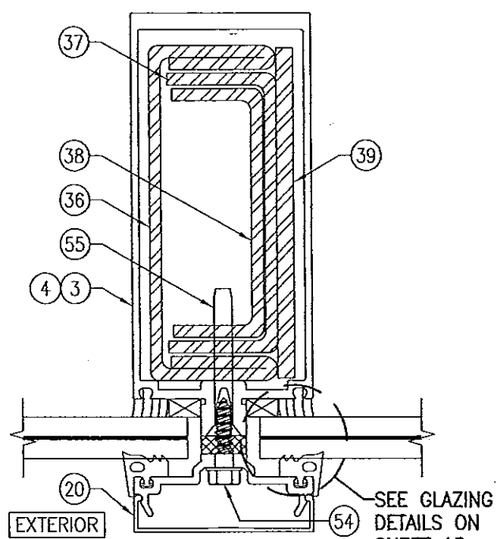

SECTION J5/14
SCALE: 1/2 FULL

VERTICAL FRAME MEMBER WITH REINFORCEMENT R4

I = 46.707 IN^4
S = 12.387 IN^3
(TRANSFORMED SECTION PROPERTIES IN TERMS OF ALUMINUM)

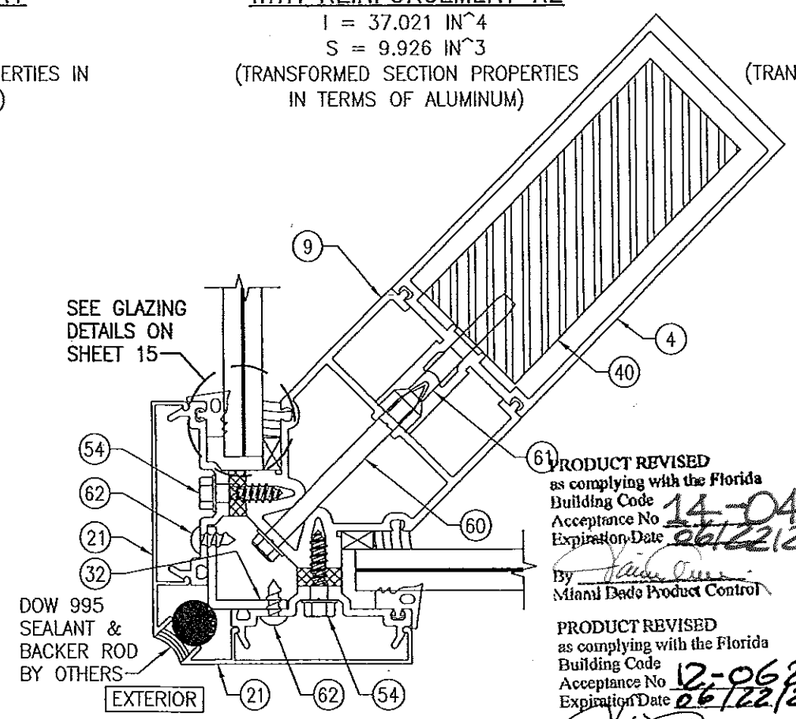

SECTION K/14
SCALE: 1/2 FULL

VERTICAL CORNER/FRAME MEMBER WITH REINFORCEMENT R5

I = 116.75 IN^4
S = 17.296 IN^3
(TRANSFORMED SECTION PROPERTIES IN TERMS OF ALUMINUM)

PRODUCT REVISED
as complying with the Florida
Building Code
Acceptance No 14-0430.23
Expiration Date 06/22/2016
By
Miami Dade Product Control

PRODUCT REVISED
as complying with the Florida
Building Code
Acceptance No 12-0622.07
Expiration Date 06/22/2016
By
Miami Dade Product Control

WARREN W. SCHAEFER LICENSE No. 44135 STATE OF FLORIDA PROFESSIONAL ENGINEER

ORDER BY: W.W.S.	CHECKED BY: W.W.S.
PLOT: 1=2	DATE: 02/14/12

NO.	REVISION DESCRIPTION	BY	DATE

DRAWING TITLE
7 13/16" DEEP 1600 SYSTEM 1 CURTAIN WALL (L.M.I.)

MANUFACTURER
KAWNEER COMPANY, INC.
555 GUTHRIDGE COURT
NORCROSS, GA 30092
770-449-5555

CONSULTANTS
W. W. SCHAEFER ENGINEERING & CONSULTING, P.A. (CA 6809)
7480 150TH COURT NORTH
PALM BEACH GARDENS, FL 33418
PHONE: 561-744-3424

CERTIFICATION
JUN 19 2012
WARREN W. SCHAEFER, P.E.
P.E. NO. 44135

DRAWING NO. 1789
REV.

SHEET NO. 14 OF 18

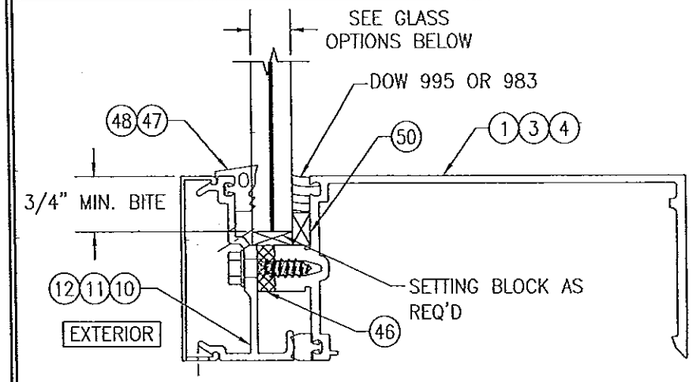

TYPICAL GLAZING DETAIL; MONOLITHIC LAMINATED GLASS TO STANDARD FRAMING

GLASS OPTIONS:
OPTION 1: 5/8" THICK LAMINATED VIRACON HRG-2 GLASS (1/4" HT. ST./0.050" URETHANE/0.080" POLYCARBONATE/0.050" URETHANE/1/4" HT. ST.)
OPTION 2 9/16" THICK LAMINATED GLASS (1/4" HT. ST./0.100" SOLUTIA SAFLEX HP/1/4" HT. ST.)
OPTION 3: 9/16" THICK LAMINATED GLASS (1/4" HT. ST./0.090" DUPONT SG/1/4" HT. ST.)
OPTION 4: 9/16" THICK LAMINATED GLASS (1/4" HT. ST./0.090" SOLUTIA SAFLEX IIIG PVB/1/4" HT. ST.)
OPTION 5: 9/16" THICK LAMINATED GLASS (1/4" HT. ST./0.090" DUPONT BUTACITE PVB/1/4" HT. ST.)

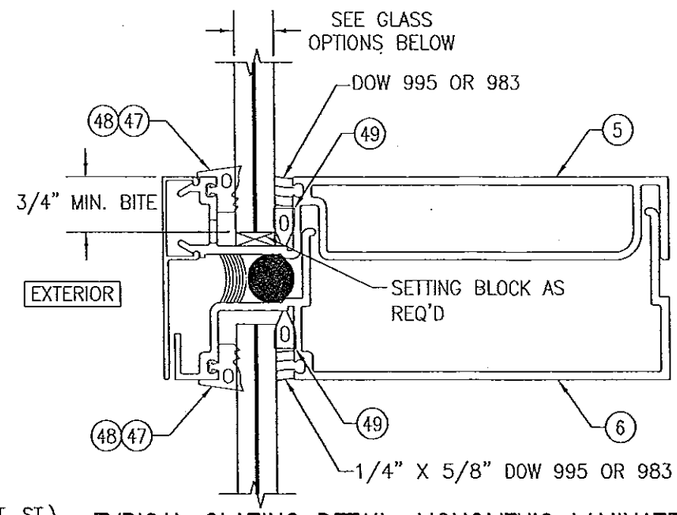

TYPICAL GLAZING DETAIL; MONOLITHIC LAMINATED GLASS TO SPLICE JOINT FRAMING

GLASS OPTIONS:
OPTION 1: 5/8" THICK LAMINATED VIRACON HRG-2 GLASS (1/4" HT. ST./0.050" URETHANE/0.080" POLYCARBONATE/0.050" URETHANE/1/4" HT. ST.)
OPTION 2 9/16" THICK LAMINATED GLASS (1/4" HT. ST./0.100" SOLUTIA SAFLEX HP/1/4" HT. ST.)
OPTION 3: 9/16" THICK LAMINATED GLASS (1/4" HT. ST./0.090" DUPONT SG/1/4" HT. ST.)
OPTION 4: 9/16" THICK LAMINATED GLASS (1/4" HT. ST./0.090" SOLUTIA SAFLEX IIIG PVB/1/4" HT. ST.)
OPTION 5: 9/16" THICK LAMINATED GLASS (1/4" HT. ST./0.090" DUPONT BUTACITE PVB/1/4" HT. ST.)

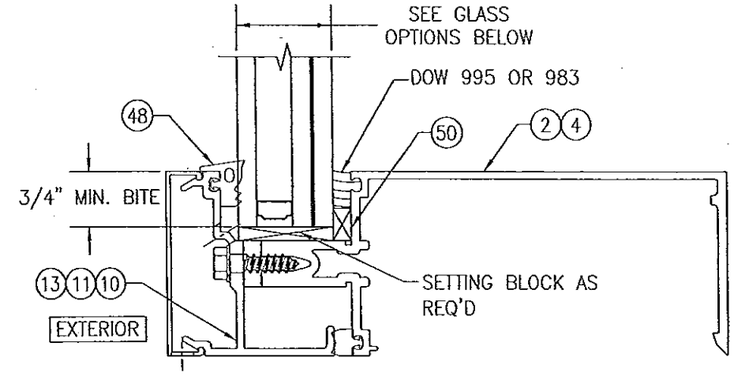

TYPICAL GLAZING DETAIL; I.G. GLASS TO STANDARD FRAMING

(NOT APPLICABLE TO CORNER FRAME MEMBER)

GLASS OPTIONS:
OPTION 6: 1 5/16" THICK I.G LAMINATED GLASS (1/4" HT. ST. OR TEMPERED EXTERIOR; 1/2" AIR SPACE; 1/4" HT. ST./0.090" SOLUTIA SAFLEX IIIG PVB/1/4" HT. ST. INTERIOR)
OPTION 7: 1 5/16" THICK I.G LAMINATED GLASS (1/4" HT. ST. OR TEMPERED EXTERIOR; 1/2" AIR SPACE; 1/4" HT. ST./0.090" DUPONT BUTACITE PVB/1/4" HT. ST. INTERIOR)

NOTE: EXTERIOR GLASS PANE OF I.G. GLAZING SHALL BE TEMPERED WHEN CURTAIN WALL GLASS IS INSTALLED IN A SMALL MISSILE IMPACT LOCATION OF A BUILDING OR WHEN GLASS IS REQUIRED TO CONFORM WITH SECTION 2406 OF THE FLORIDA BUILDING CODE FOR USE OF GLASS IN HAZARDOUS LOCATIONS.

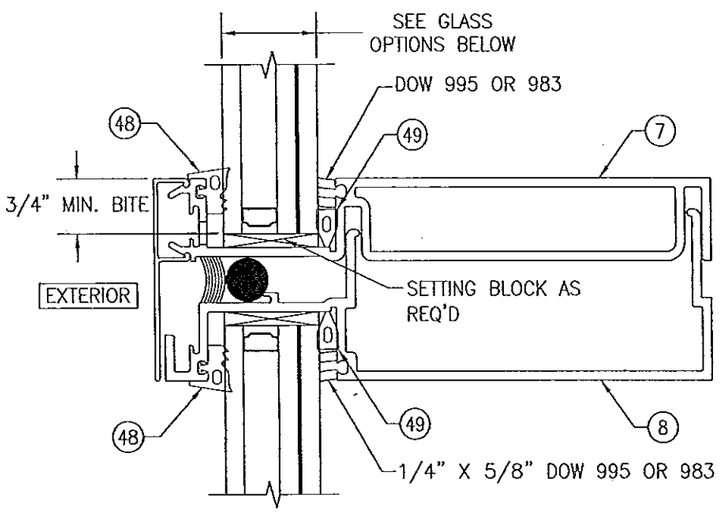

TYPICAL GLAZING DETAIL; I.G. GLASS TO SPLICE JOINT FRAMING

NOTE: EXTERIOR GLASS PANE OF I.G. GLAZING SHALL BE TEMPERED WHEN CURTAIN WALL GLASS IS INSTALLED IN A SMALL MISSILE IMPACT LOCATION OF A BUILDING OR WHEN GLASS IS REQUIRED TO CONFORM WITH SECTION 2406 OF THE FLORIDA BUILDING CODE FOR USE OF GLASS IN HAZARDOUS LOCATIONS.

GLASS OPTIONS:
OPTION 6: 1 5/16" THICK I.G LAMINATED GLASS (1/4" HT. ST. OR TEMPERED EXTERIOR; 1/2" AIR SPACE; 1/4" HT. ST./0.090" SOLUTIA SAFLEX IIIG PVB/1/4" HT. ST. INTERIOR)
OPTION 7: 1 5/16" THICK I.G LAMINATED GLASS (1/4" HT. ST. OR TEMPERED EXTERIOR; 1/2" AIR SPACE; 1/4" HT. ST./0.090" DUPONT BUTACITE PVB/1/4" HT. ST. INTERIOR)

PRODUCT REVISED
as complying with the Florida
Building Code
Acceptance No 14-0430.23
Expiration Date 06/22/2016
By
Miami Dade Product Control

PRODUCT REVISED
as complying with the Florida
Building Code
Acceptance No 12-0622.07
Expiration Date 06/22/2016
By
Miami Dade Product Control

WARREN W. SCHAEFER LICENSE No. 44135 STATE OF FLORIDA PROFESSIONAL ENGINEER

DRAWN BY: W.W.S.	CHECKED BY: W.W.S.
PLOT: 1=2	DATE: 02/14/12

NO.	REVISION DESCRIPTION	BY	DATE

DRAWING TITLE
7 13/16" DEEP 1600 SYSTEM 1 CURTAIN WALL (L.M.I.)

MANUFACTURER
KAWNEER COMPANY, INC.
555 GUTHRIDGE COURT
NORCROSS, GA 30092
770-449-5555

CONSULTANTS
W. W. SCHAEFER ENGINEERING & CONSULTING, P.A. (CA 6809)
7480 150TH COURT NORTH
PALM BEACH GARDENS, FL 33418
PHONE: 561-744-3424

CERTIFICATION
JUN 19 2012
WARREN W. SCHAEFER, P.E.
P.E. NO. 44135

DRAWING NO. 1789 REV.
SHEET NO. 15 OF 18

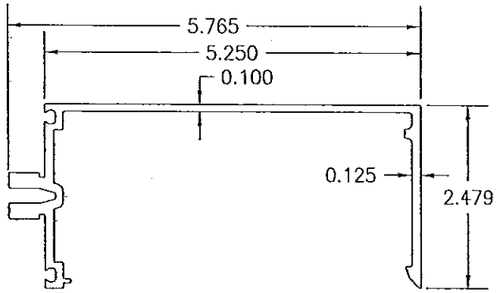

(1) HEAD & SILL HORIZONTAL FRAMING USED WITH MONOLITHIC GLASS

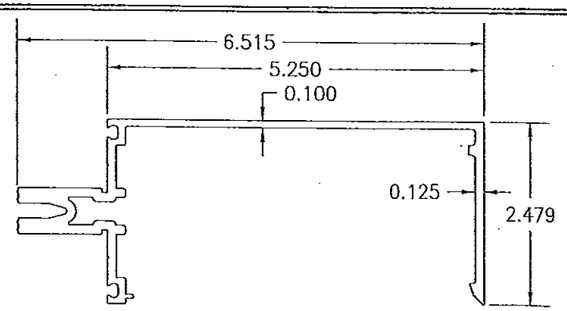

(2) HEAD & SILL HORIZONTAL FRAMING USED WITH I.G. GLASS

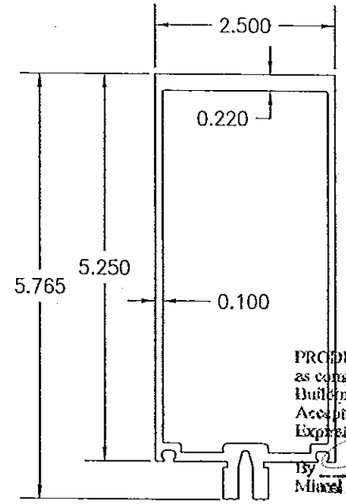

(3) STANDARD VERTICAL MULLION OR HORIZONTAL INTERMEDIATE MEMBER USED WITH MONOLITHIC GLASS

I = 9.607^4

S = 3.169^3

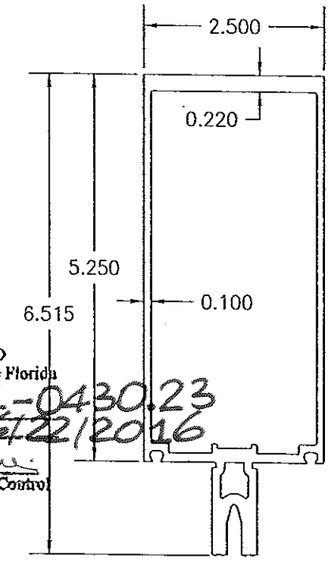

(4) CORNER MULLION USED WITH MONOLITHIC GLASS AND STANDARD VERTICAL MULLION OR HORIZONTAL INTERMEDIATE MEMBER USED WITH I.G. GLASS

I = 12.767^4

S = 3.805^3

PRODUCT REVISED
as complying with the Florida
Building Code
Acceptance No 14-0430.23
Expiration Date Oct 22 2016
By
Miami Dade Product Control

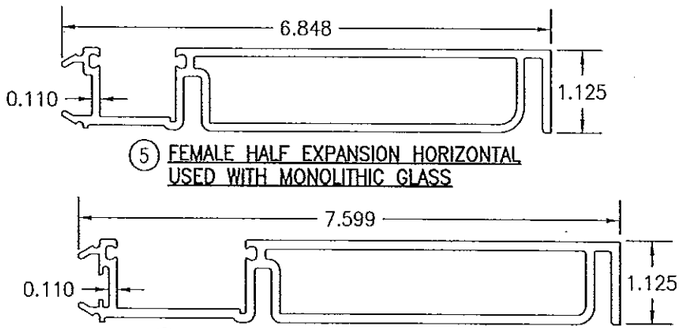

(5) FEMALE HALF EXPANSION HORIZONTAL USED WITH MONOLITHIC GLASS

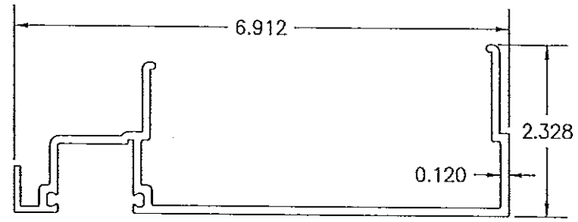

(6) MALE HALF EXPANSION HORIZONTAL USED WITH MONOLITHIC GLASS

(7) FEMALE HALF EXPANSION HORIZONTAL USED WITH I.G. GLASS

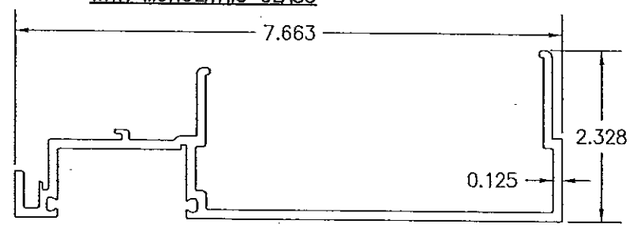

(8) MALE HALF EXPANSION HORIZONTAL USED WITH I.G. GLASS

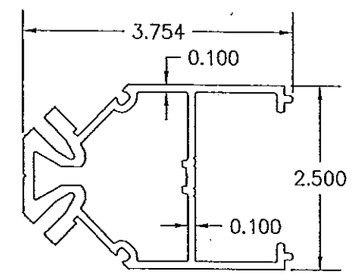

(9) CORNER MULLION ADAPTOR

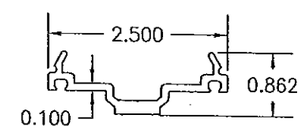

(10) PRESSURE PLATE

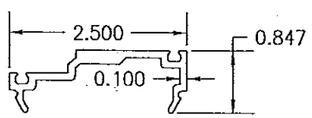

(11) PRESSURE PLATE

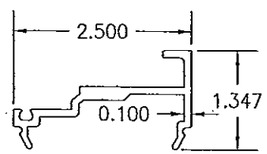

(12) PRESSURE PLATE

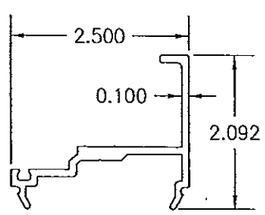

(13) PRESSURE PLATE

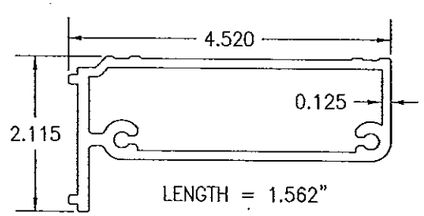

(14) SHEAR BLOCK (HORIZONTAL FRAMING TO STANDARD VERTICAL MULLION)

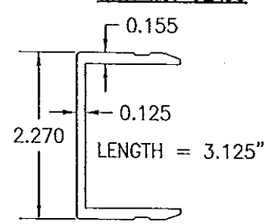

(15) SHEAR BLOCK (HORIZONTAL FRAMING TO CORNER MULLION)

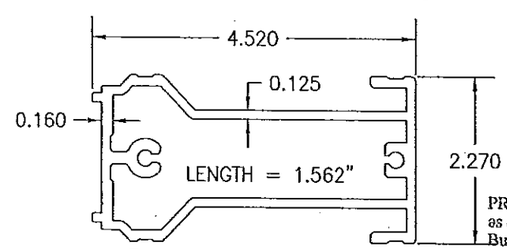

(16) SHEAR BLOCK (TRANSOM MULLION TO STANDARD VERTICAL MULLION)

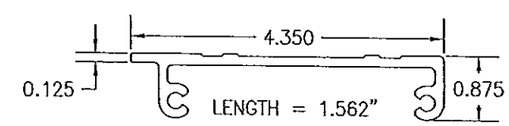

(17) SHEAR BLOCK (HORIZONTAL EXPANSION MULLION TO STANDARD VERTICAL MULLION)

PRODUCT REVISED
as complying with the Florida
Building Code
Acceptance No 12-0622.07
Expiration Date 06/22/2016
By
Miami Dade Product Control

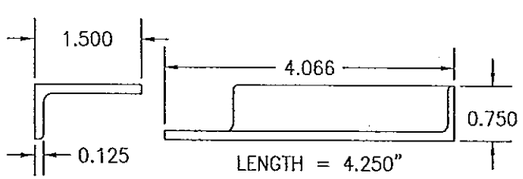

(18) SHEAR BLOCK (HORIZONTAL EXPANSION MULLION TO CORNER MULLION)

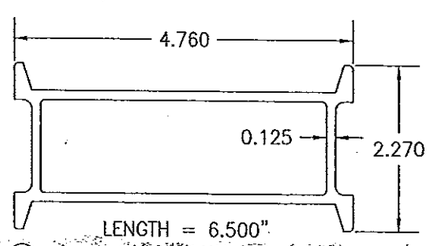

(19) VERTICAL MULLION SPLICE SLEEVE

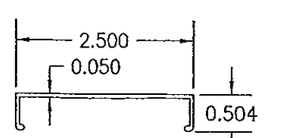

(20) STANDARD PRESSURE PLATE COVER

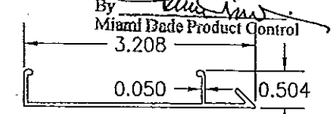

(21) CORNER PRESSURE PLATE COVER

WARREN W. SCHAEFER LICENSE No. 44135 STATE OF FLORIDA PROFESSIONAL ENGINEER

NO.	REVISION DESCRIPTION	BY	DATE

DRAWN BY: W.W.S. | CHECKED BY: W.W.S.
PLOT: 1=2 | DATE: 02/14/12

DRAWING TITLE: 7 13/16" DEEP 1600 SYSTEM 1 CURTAIN WALL (L.M.I.)

MANUFACTURER: KAWNEER COMPANY, INC. 555 GUTHRIDGE COURT NORCROSS, GA 30092 770-449-5555

CONSULTANTS: W. W. SCHAEFER ENGINEERING & CONSULTING, P.A. (CA 6809) 7480 150TH COURT NORTH PALM BEACH GARDENS, FL 33418 PHONE: 561-744-3424

CERTIFICATION: JUN 19 2012 WARREN W. SCHAEFER, P.E. P.E. NO. 44135

DRAWING NO. 1789 | REV.

SHEET NO. 16 OF 18

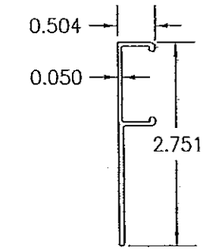

(23) EXPANSION HORIZONTAL MULLION COVER

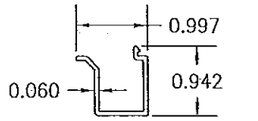

(24) DOOR POCKET FILLER

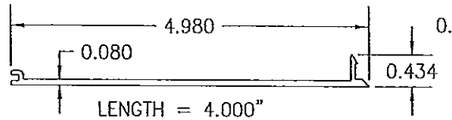

(25) SILL FRAMING FILLER

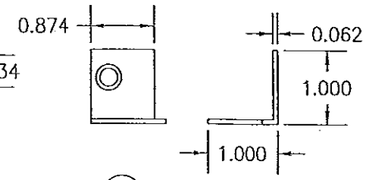

(26A) JOINT PLUG USED WITH MONOLITHIC GLASS SYSTEMS

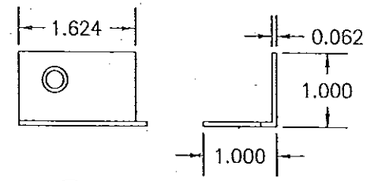

(26B) JOINT PLUG USED WITH I.G. GLASS SYSTEMS

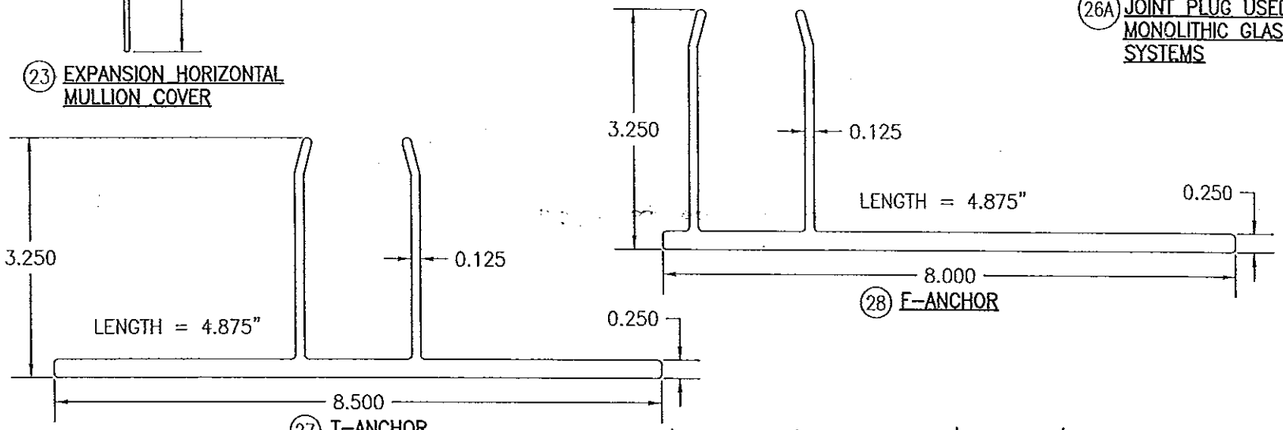

(28) F-ANCHOR

(27) T-ANCHOR

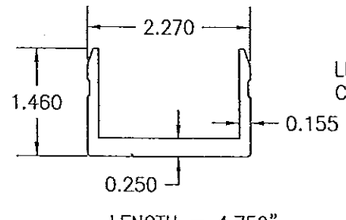

(29) U-ANCHOR

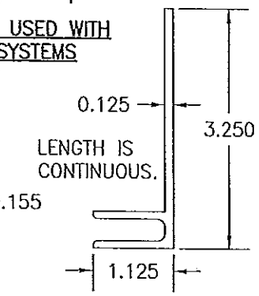

(30) F-PERIMITER ANCHOR USED WITH MONOLITHIC GLASS SYSTEMS

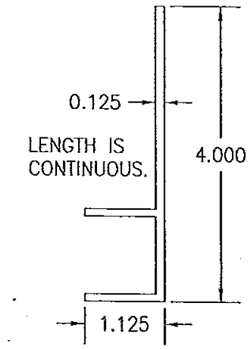

(31) F-PERIMITER ANCHOR USED WITH WITH I.G. GLASS SYSTEMS

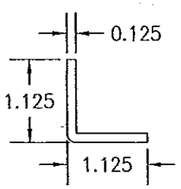

(32) CORNER MULLION JOINER

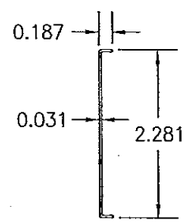

(33) COVER SPLICE

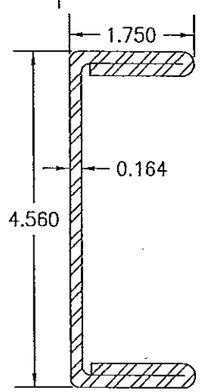

(36) MULLION REINFORCEMENT
I = 5.667 IN^4
S = 2.485 IN^3

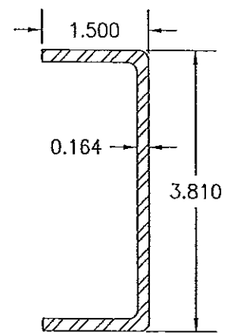

(37) MULLION REINFORCEMENT
I = 2.208 IN^4
S = 1.159 IN^3

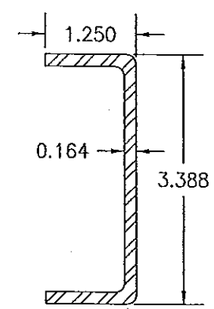

(38) MULLION REINFORCEMENT
I = 1.453 IN^4
S = 0.858 IN^3

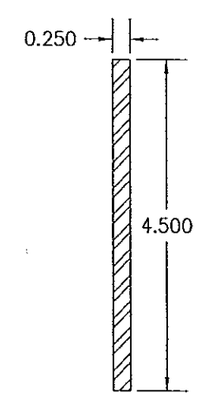

(39) MULLION REINFORCEMENT
I = 1.898 IN^4
S = 0.844 IN^3

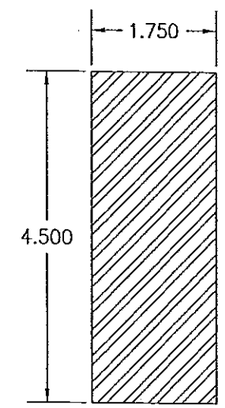

(40) CORNER MULLION REINFORCEMENT
I = 13.289 IN^4
S = 5.906 IN^3

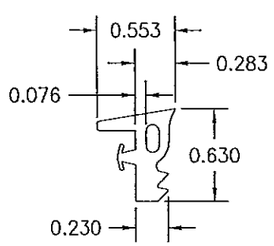

(47) EXTERIOR GLAZING FIXED GASKET USED WITH 5/8" MONOLITHIC GLASS

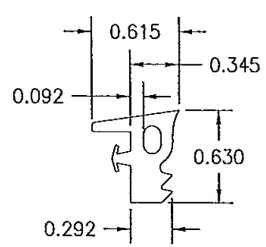

(48) EXTERIOR GLAZING FIXED GASKET

PRODUCT REVISED
as complying with the Florida
Building Code
Acceptance No 14-0430.23
Expiration Date 06/22/2016
By
Miami Dade Product Control

PRODUCT REVISED
as complying with the Florida
Building Code
Acceptance No 12-0622.07
Expiration Date 06/22/2016
By
Miami Dade Product Control

WARREN W. SCHAEFER LICENSE No. 44135 STATE OF FLORIDA PROFESSIONAL ENGINEER

DRAWN BY: W.W.S.	CHECKED BY: W.W.S.
PLOT: 1=2	DATE: 02/14/12

NO.	REVISION DESCRIPTION	BY	DATE

DRAWING TITLE
7 13/16" DEEP 1600 SYSTEM 1 CURTAIN WALL (L.M.I.)

MANUFACTURER
KAWNEER COMPANY, INC.
555 GUTHRIDGE COURT
NORCROSS, GA 30092
770-449-5555

CONSULTANTS
W. W. SCHAEFER ENGINEERING & CONSULTING, P.A. (CA 6809)
7480 150TH COURT NORTH
PALM BEACH GARDENS, FL 33418
PHONE: 561-744-3424

CERTIFICATION
JUN 18 2012
WARREN W. SCHAEFER, P.E.
P.E. NO. 44135

DRAWING NO. 1789
REV.

SHEET NO. 17 OF 18

ITEM #	ITEM DESCRIPTION	MANUFACTURER/NOTES
	PARTS	
1	HEAD & SILL HORIZONTAL FRAMING USED WITH MONOLITHIC GLASS	6063-T6 ALUMINUM
2	HEAD & SILL HORIZONTAL FRAMING USED WITH I.G. GLASS	6063-T6 ALUMINUM
3	STANDARD VERTICAL MULLION OR HORIZONTAL INTERMEDIATE MEMBER USED WITH MONOLITHIC GLASS	6063-T6 ALUMINUM
4	CORNER MULLION USED WITH MONOLITHIC GLASS AND STANDARD VERTICAL MULLION OR HORIZONTAL INTERMEDIATE MEMBER USED WITH I.G. GLASS	6063-T6 ALUMINUM
5	FEMALE HALF EXPANSION HORIZONTAL USED WITH MONOLITHIC GLASS	6063-T6 ALUMINUM
6	MALE HALF EXPANSION HORIZONTAL USED WITH MONOLITHIC GLASS	6063-T6 ALUMINUM
7	FEMALE HALF EXPANSION HORIZONTAL USED WITH I.G. GLASS	6063-T6 ALUMINUM
8	MALE HALF EXPANSION HORIZONTAL USED WITH I.G. GLASS	6063-T6 ALUMINUM
9	CORNER MULLION ADAPTOR	6063-T6 ALUMINUM
10	PRESSURE PLATE	6063-T6 ALUMINUM
11	PRESSURE PLATE	6063-T6 ALUMINUM
12	PRESSURE PLATE	6063-T6 ALUMINUM
13	PRESSURE PLATE	6063-T6 ALUMINUM
14	SHEAR BLOCK (HORIZONTAL FRAMING TO STANDARD VERTICAL MULLION)	6063-T6 ALUMINUM
15	SHEAR BLOCK (HORIZONTAL FRAMING TO CORNER MULLION)	6063-T6 ALUMINUM
16	SHEAR BLOCK (TRANSOM MULLION TO STANDARD VERTICAL MULLION)	6063-T6 ALUMINUM
17	SHEAR BLOCK (HORIZONTAL EXPANSION MULLION TO STANDARD VERTICAL MULLION)	6063-T6 ALUMINUM
18	SHEAR BLOCK (HORIZONTAL EXPANSION MULLION TO CORNER MULLION)	6063-T6 ALUMINUM
19	VERTICAL MULLION SPLICE SLEEVE	6063-T6 ALUMINUM
20	STANDARD PRESSURE PLATE COVER	6063-T6 ALUMINUM
21	CORNER PRESSURE PLATE COVER	6063-T6 ALUMINUM
23	EXPANSION HORIZONTAL MULLION COVER	6063-T6 ALUMINUM
24	DOOR POCKET FILLER	6063-T6 ALUMINUM
25	SILL FRAMING FILLER	6063-T6 ALUMINUM (AT 1/4 POINTS OF FRAMING SPAN)
26A	JOINT PLUG USED WITH MONOLITHIC GLASS SYSTEMS	6063-T6 ALUMINUM
26B	JOINT PLUG USED WITH I.G. GLASS SYSTEMS	6063-T6 ALUMINUM
27	T-ANCHOR	6063-T6 ALUMINUM
28	F-ANCHOR	6063-T6 ALUMINUM
29	U-ANCHOR	6063-T6 ALUMINUM
30	F-PERIMITER ANCHOR USED WITH WITH MONOLITHIC GLASS SYSTEMS	6063-T6 ALUMINUM
31	F-PERIMITER ANCHOR USED WITH WITH I.G. GLASS SYSTEMS	6063-T6 ALUMINUM
32	CORNER MULLION JOINER	5005 H32 ALUMINUM
33	COVER SPLICE	5005 H32 ALUMINUM

ITEM #	ITEM DESCRIPTION	MANUFACTURER/NOTES
	PARTS	
36	MULLION REINFORCEMENT	ASTM A1011 GRADE 50 STEEL
37	MULLION REINFORCEMENT	ASTM A1011 GRADE 50 STEEL
38	MULLION REINFORCEMENT	ASTM A1011 GRADE 50 STEEL
39	MULLION REINFORCEMENT	ASTM A36 STEEL
40	CORNER MULLION REINFORCEMENT	ASTM A36 STEEL
41	5" X 3" X 3/8" X 6" LONG ANGLE	50 KSI STEEL
42	8" X 3" X 3/8" X 6" LONG BENT PLATE	50 KSI STEEL
	SEALS & SEALANTS	
45	FIXED GASKET	TREMCO TR4726P EPDM DUROMETER 70 +/-5
46	THERMAL SEPERATOR	TREMCO TR-4015P EPDM DUROMETER 60 +/-5
47	EXTERIOR GLAZING FIXED GASKET USED WITH 5/8" MONOLITHIC GLASS	TREMCO TR-4860W EPDM DUROMETER 60 +/-5
48	EXTERIOR GLAZING FIXED GASKET USED WITH I.G. & 9/16" MONOLITHIC GLASS	TREMCO TR-4014P EPDM DUROMETER 60 +/-5
49	WEDGE GLAZING GASKET	TREMCO TR-4873S SILICONE DUROMETER 70 +/-5
50	5/16" X 7/16" GLAZING TAPE	NORTON V2100 FOAM OR TREMCO 920
51	STEEL TO ALUMINUM SEPERATOR	THERMO-TOK TN-9004
	FASTENERS	
54	1/4" X 1" HWHTFS 300 SERIES S.S.	WITHIN 3" FROM ENDS & 9" MAX. O.C.
55	1/4-20 X 2" FNTCS 300 SERIES S.S.	WITHIN 9" FROM ENDS & 9" MAX. O.C.
56	NO. 10 X 3/8" FHTFS 300 SERIES S.S.	1 PER JOINT PLUG
57	10-16 X 1 1/4" FHSDS 300 SERIES S.S.	1 PER VERTICAL MULLION SPLICE SLEEVE
58	NO. 12 X 1" PHTFS 300 SERIES S.S.	1 PER VERTICAL MULLION SPLICE SLEEVE
59	NO. 12 X 1" PHTFS 300 SERIES S.S.	2 ABOVE SPLICE; WITHIN 3" OF END 3" O.C.
60	1/4" X 3" S.S. HWHTFS FNTCS 300 SERIES S.S.	WITHIN 9" FROM ENDS & 9" MAX. O.C.
61	1/4-20 X 2" FNTCS 300 SERIES S.S.	WITHIN 9" FROM ENDS & 24" MAX. O.C.
62	NO. 10 X 1/2" PHTFS 300 SERIES S.S.	WITHIN 6" FROM ENDS & 18" MAX. O.C.
63	NO. 8 X 1/2" FHTFS 300 SERIES S.S.	2 PER U-ANCHOR
64	NO. 12 X 1 7/8" PHTFS 300 SERIES S.S.	2 PER SHEAR BLOCK
65	NO. 12 X 7/8" FHTFS 300 SERIES S.S.	2 PER SHEAR BLOCK
66	NO. 12 X 7/16" PHTFS 300 SERIES S.S.	3 PER SHEAR BLOCK
67	NO. 12 X 1/2" FHTFS 300 SERIES S.S.	2 PER SHEAR BLOCK
68	NO. 12 X 1/2" FHTFS 300 SERIES S.S.	4 PER SHEAR BLOCK

PRODUCT REVISED
as complying with the Florida
Building Code
Acceptance No 14-0430.23
Expiration Date 06/22/2016
By
Miami Dade Product Control

PRODUCT REVISED
as complying with the Florida
Building Code
Acceptance No 12-0622.07
Expiration Date 06/22/2016
By
Miami Dade Product Control

WARREN W. SCHAEFER LICENSE No. 44135 STATE OF FLORIDA PROFESSIONAL ENGINEER

DRAWN BY: W.W.S.	CHECKED BY: W.W.S.
PLOT: 1=2	DATE: 02/14/12

NO.	REVISION DESCRIPTION	BY	DATE

DRAWING TITLE
7 13/16" DEEP 1600 SYSTEM 1 CURTAIN WALL (L.M.I.)

MANUFACTURER
KAWNEER COMPANY, INC.
555 GUTHRIDGE COURT
NORCROSS, GA 30092
770-449-5555

CONSULTANTS
W. W. SCHAEFER ENGINEERING & CONSULTING, P.A. (CA 6809)
7480 150TH COURT NORTH
PALM BEACH GARDENS, FL 33418
PHONE: 561-744-3424

CERTIFICATION
JUN 19 2012
WARREN W. SCHAEFER, P.E.
P.E. NO. 44135

DRAWING NO. 1789 REV.

SHEET NO. 18 OF 18