MIAMI-DADE COUNTY
DEPARTMENT OF REGULATORY AND ECONOMIC RESOURCES (RER)
BOARD AND CODE ADMINISTRATION DIVISION

MIAMI–DADE COUNTY, FLORIDA
PRODUCT CONTROL SECTION
11805 SW 26 Street, Room 208
T (786) 315–2590 F (786) 315–2599
www.miamidade.gov/economy

NOTICE OF ACCEPTANCE (NOA)

Kawneer Company, Inc.
555 Guthridge Court
Norcross, GA 30092

SCOPE:

This NOA is being issued under the applicable rules and regulations governing the use of construction materials. The documentation submitted has been reviewed and accepted by Miami–Dade County RER–Product Control Section to be used in Miami–Dade County and other areas where allowed by the Authority Having Jurisdiction (AHJ).

This NOA shall not be valid after the expiration date stated below. The Miami–Dade County Product Control Section (In Miami–Dade County) and/ or the AHJ (in areas other than Miami–Dade County) reserve the right to have this product or material tested for quality assurance purposes. If this product or material fails to perform in the accepted manner, the manufacturer will incur the expense of such testing and the AHJ may immediately revoke, modify, or suspend the use of such product or material within their jurisdiction. RER reserves the right to revoke this acceptance, if it is determined by Miami–Dade County Product Control Section that this product or material fails to meet the requirements of the applicable building code.

This product is approved as described herein, and has been designed to comply with the Florida Building Code, including the High Velocity Hurricane Zone.

DESCRIPTION: Series "IR–500 Flush, Dry and Wet Glazed" Aluminum Storefront System – L.M.I.

APPROVAL DOCUMENT: Drawing No. **1633**, titled "IR500 Aluminum Store Front System – Large Missile Impact" Sheets 01 thru 10 of 10, dated 01/27/09 with revision No. "**B1**" dated 02/25/13, prepared by W. W. Schaefer Engineering & Consulting, P.A., signed and sealed by Warren W. Schaefer, P. E., bearing the Miami–Dade County Product Control Section Revision stamp with the Notice of Acceptance number and Expiration date by the Miami–Dade County Product Control Section.

MISSILE IMPACT RATING: Large and Small Missile Impact Resistant

LABELING: Each unit shall bear a permanent label with the manufacturer's name or logo, city, state, series, and following statement: "Miami–Dade County Product Control Approved", unless otherwise noted herein.

RENEWAL of this NOA shall be considered after a renewal application has been filed and there has been no change in the applicable building code negatively affecting the performance of this product.

TERMINATION of this NOA will occur after the expiration date or if there has been a revision or change in the materials, use, and/ or manufacture of the product or process. Misuse of this NOA as an endorsement of any product, for sales, advertising or any other purposes shall automatically terminate this NOA. Failure to comply with any section of this NOA shall be cause for termination and removal of NOA.

ADVERTISEMENT: The NOA number preceded by the words Miami–Dade County, Florida, and followed by the expiration date may be displayed in advertising literature. If any portion of the NOA is displayed, then it shall be done in its entirety.

INSPECTION: A copy of this entire NOA shall be provided to the user by the manufacturer or its distributors and shall be available for inspection at the job site at the request of the Building Official.

This NOA **revises NOA No. 13–0530.16** and consists of this page 1 and evidence pages E–1, E–2 and E–3, as well as approval document mentioned above.

The submitted documentation was reviewed by **Jaime D. Gascon, P. E.**

MIAMI-DADE COUNTY APPROVED

J. Gascon
9/4/14

NOTICE OF ACCEPTANCE: EVIDENCE SUBMITTED

A. DRAWINGS

1. Manufacturer's die drawings and sections.
   (Submitted under previous NOA's No.'s 11–0621.04 and 09–0218.08)
2. Drawing No. **1633**, titled "IR500 Aluminum Store Front System – Large Missile Impact" Sheets 01 thru 10 of 10, dated 01/27/09 with revision No. "**B1**", dated 02/25/13, prepared by W. W. Schaefer Engineering & Consulting, P.A., signed and sealed by Warren W. Schaefer, P. E.
   (Submitted under previous NOA No. 13–0530.16)

B. TESTS

1. Test reports on: 1) Air Infiltration Test, per FBC, TAS 202–94
   2) Uniform Static Air Pressure Test, Loading per FBC, TAS 202–94
   3) Water Resistance Test, per FBC, TAS 202–94
   4) Large Missile Impact Test per FBC, TAS 201–94
   5) Cyclic Wind Pressure Loading per FBC, TAS 203–94
   6) Forced Entry Test, per FBC 2411.3.2.1, and TAS 202–94

   along with marked–up drawings and installation diagram of series IR–500 aluminum flush glazed storefront system, specimens No.'s 1A, 1B and 1C, by Hurricane Test Laboratory, LLC, Test Reports No.'s **HTL–G049–0402–11**, dated 05/27/11 and **HTL–G049–0201–08**, dated 03/07/07, specimens No.'s 1, 2, 2A, 5, 6, 7 and 8, both signed and sealed by Vinu Abraham, P. E.
   (Submitted under previous NOA's No.'s 11–0621.04 and 09–0218.08)

C. CALCULATIONS

1. Anchor verification calculations and structural analysis, complying with FBC, updated on 08/17/11, prepared by W. W. Schaefer Engineering & Consulting, P.A., signed and sealed by Warren W. Schaefer, P. E.
   (Submitted under previous NOA No. 11–0621.04)
2. **Glazing complies with ASTM E1300–04/ 09**

D. QUALITY ASSURANCE

1. Miami–Dade Department of Regulatory and Economic Resources (RER).

E. MATERIAL CERTIFICATIONS

1. Notice of Acceptance No. **13–0129.27** issued to **E.I. DuPont DeNemours & Co., Inc.** for their "**DuPont Butacite® PVB Interlayer**" dated 04/11/13, expiring on 12/11/16.
2. Notice of Acceptance No. **11–0624.02** issued to **E.I. DuPont DeNemours & Co.**, Inc. for their "**DuPont SentryGlas® Interlayer**" dated 08/25/11, expiring on 01/14/17.

Jaime D. Gascon, P. E.
Product Control Section Supervisor
NOA No. 14–0430.28
Expiration Date: April 15, 2019
Approval Date: September 11, 2014

E. MATERIAL CERTIFICATIONS (CONTINUED)

3. Notice of Acceptance No. **14–0423.16** issued to **Eastman Chemical Company (MA)** for their "**Saflex HP Clear or Color Glass Interlayers**" dated 06/19/14, expiring on 04/14/18.
4. **Exterior Dry–Glazed Push–in Gasket: TREMCO Part No. TR–14130E (Kawneer Part No. 127–122),** EPDM Dense Rubber Extrusion with 70 durometer ext. glazing gasket complying with **ASTM C864** Option II specs., **ASTM D412**, 1500 PSI, **ASTM D395B**, 22 HRS 158°F.
   (Submitted under previous NOA No. 11–0621.04)
5. **Interior Dry–Glazed Fixed Gasket: TREMCO Part No. TR–14270E (Kawneer Part No. 127–121),** Closed Cell ("sponge") EPDM rubber compound, interior glazing gasket complying with **ASTM C509** Option II specification compression deflection limit 20-24psi.
   (Submitted under previous NOA No. 11–0621.04)
6. **Exterior Wet–Glazed Push–in Gasket: TREMCO Part No. TR–14271E (Kawneer Part No. 027–074),** EPDM Dense Rubber Extrusion with 70 durometer glazing gasket complying with **ASTM C864** Option II specs., **ASTM D412** 1600 PSI, **ASTM D395B,** 22 HRS 158°F.
   (Submitted under previous NOA No. 11–0621.04)
7. **Interior Wet Glazed Slide–in Spacer: Santoprene Spacer (Kawneer Part No. 127–012),** Dense Silicone Rubber Extrusion (Black) with 60 durometer compatible with silicone glazing.
   (Submitted under previous NOA No. 11–0621.04)

F. STATEMENTS

1. Statement letter of conformance to, complying with **FBC 5th Edition (2014)** and no financial interest, prepared by W. W. Schaefer Engineering & Consulting, P.A., dated 04/14/14, signed and sealed by Warren W. Schaefer, P. E.
2. Statement letter of conformance with **ANSI/ AAMA/ NWWDA 101/ I.S.2–97** and complying with **FBC–2010**, issued by W. W. Schaeffer Engineering & Consulting, P.A., dated 02/25/13, signed and sealed by Warren W. Schaefer, P. E.
   (Submitted under previous NOA No. 13–0530.16)
3. Statement letter of no financial interest and independence, W. W. Schaeffer Engineering & Consulting, P.A., dated 02/25/13, signed and sealed by Warren W. Schaefer, P. E.
   (Submitted under previous NOA No. 13–0530.16)

Jaime D. Gascon, P. E.
Product Control Section Supervisor
NOA No. 14–0430.28
Expiration Date: April 15, 2019
Approval Date: September 11, 2014

F. STATEMENTS (CONTINUED)

4. Laboratory compliance letter for Test Reports No.'s **HTL–G049–0402–11**, dated 05/27/11 and **HTL–G049–0201–08**, dated 03/07/07, specimens No.'s 1, 2, 2A, 5, 6, 7 and 8, both signed and sealed by Vinu Abraham, P. E.
   (Submitted under previous NOA's No.'s 11–0621.04 and 09–0218.08)
5. Proposal No. **10–1277** issued by Product Control, dated 01/27/11, signed by Manuel Perez, P. E.
   (Submitted under previous NOA No. 11–0621.04)

G. OTHERS

1. Notice of Acceptance No. **13–0530.16**, issued to Kawneer Company, Inc. for their Series **"IR–500 Flush, Dry and Wet Glazed" Aluminum Storefront System – L.M.I.**", approved on 08/01/13 and expiring on 04/15/19.

Jaime D. Gascon, P. E.
Product Control Section Supervisor
NOA No. 14–0430.28
Expiration Date: April 15, 2019
Approval Date: September 11, 2014

GENERAL NOTES:

1. THESE STORE FRONT SYSTEMS HAVE BEEN TESTED, ANALYZED & APPROVED FOR DESIGN PRESSURES NOT TO EXCEED THOSE SHOWN IN THE "ALLOWABLE DESIGN PRESSURE TABLE(S).
2. OPENINGS, BUCKING & BUCKING FASTENERS MUST BE PROPERLY DESIGNED & INSTALLED TO TRANSFER WIND LOADS TO THE STRUCTURE.
3. ALL HARDWARE & FASTENERS SHALL BE IN ACCORDANCE WITH THESE DRAWINGS & SHALL NOT VARY UNLESS SPECIFICALLY MENTIONED ON THE DRAWINGS. SPECIFIED ANCHOR EMBED TO BASE MATERIAL SHALL BE BEYOND WALL FINISH OR STUCCO.
4. THE DETAILS & SPECIFICATIONS SHOWN HEREIN REPRESENT THE PRODUCTS TESTED & PROPOSED FOR WATER, AIR, IMPACT, CYCLIC & UNIFORM STATIC AIR PRESSURE TESTING IN CONFORMANCE WITH THE FLORIDA BUILDING CODE PROTOCALS TAS-201, 202 & 203 FOR LARGE MISSILE IMPACT STORE FRONT SYSTEMS.
5. THESE STORE FRONT SYSTEMS HAVE BEEN DESIGNED IN ACCORDANCE WITH AND MEET THE REQUIREMENTS OF THE FLORIDA BUILDING CODE (FBC) INCLUDING HIGH VELOCITY HURRICANE ZONES (HVHZ).
6. IMPACT SHUTTERS ARE NOT REQUIRED WITH THESE STORE FRONTS.
7. ALL ANCHORS SECURING FRAME TO PRESSURE TREATED BUCKS OR WOOD FRAMING SHALL BE CAPABLE OF RESISTING CORROSION CAUSED BY THE PRESSURE TREATING CHEMICALS IN THE WOOD.
8. DETERMINE THE POSITIVE & NEGATIVE DESIGN LOADS TO USE WHEN REFERENCING THESE DOCUMENTS IN ACCORDANCE WITH THE GOVERNING CODE AND GOVERNING WIND VELOCITY. FOR WIND LOAD CALCULATIONS IN ACCORDANCE WITH THE FLORIDA BUILDING CODE, A DIRECTIONALITY FACTOR OF Kd = 0.85 MAY BE APPLIED WHEN USED IN CONJUNCTION WITH LOAD COMBINATIONS SPECIFIED IN SECTION 2.0 OF THE ASCE 7 STANDARD.
9. NO INCREASE IN ALLOWABLE STRESS HAS BEEN USED IN THE CERTIFICATION OF THIS PRODUCT. WIND LOAD DURATION FACTOR Cd = 1.6 WAS USED FOR WOOD SCREW ANALYSIS ONLY.
10. MATERIALS, INCLUDING BUT NOT LIMITED TO STEEL SCREWS, THAT COME INTO CONTACT WITH OTHER DISSIMILAR MATERIALS SHALL MEET THE REQUIREMENTS OF FLORIDA BUILDING CODE CHAPTER 20.

CORNER & FRAME END CONSTRUCTION:

FRAME HEAD CORNER (APPLICABLE TO ITEM #1A & 1B): HEAD IS SQUARE CUT, BUTTED TO SIDE, FASTENED WITH THREE(3) NO. 12 X 1" PHTFS FASTENERS THROUGH THE SIDE MEMBER INTO THE HEAD MEMBER SCREW SPLINES & SEALED WITH SILICONE.

FRAME HEAD CORNER (APPLICABLE TO ITEM #1C): HEAD IS MITER OR SQUARE CUT, BUTTED TO SIDE, FASTENED WITH TWO(2) NO. 12 X 1 1/2" PHTFS FASTENERS THROUGH THE SIDE MEMBER INTO THE HEAD MEMBER SCREW SPLINES & SEALED WITH SILICONE.

FRAME SILL CORNER: SILL IS SQUARE CUT, BUTTED TO SIDE, FASTENED WITH THREE(3) NO. 12 X 1" PHTFS FASTENERS THROUGH THE SIDE MEMBER INTO THE SILL MEMBER SCREW SPLINES & SEALED WITH SILICONE.

FRAME DOOR JAMB SILL CORNER: SILL IS SQUARE CUT, BUTTED TO SIDE, FASTENED WITH 1 JAMB PIVOT ASSEMBLY. EACH PIVOT ASSEMBLY WAS FASTENED TO TO THE SIDE WITH THREE(3) NO. 12-24 X 5/8" FHMS. THE THRESHOLD IS THEN FASTENED TO PIVOT ASSEMBLY WITH TWO(2) NO. 12-24 X 3/8" FHMS & SEALED WITH SILICONE.

HORIZONTAL FRAME MULLION END (APPLICABLE TO ITEMS #6A & #7): HORIZONTAL IS SQUARE CUT, BUTTED TO SIDE, FASTENED WITH THREE(3) NO. 12 X 1" SS PHTFS FASTENERS THROUGH THE SIDE MEMBER INTO THE MULLION MEMBER SCREW SPLINES & SEALED WITH SILICONE.

HORIZONTAL FRAME MULLION END (APPLICABLE TO ITEM #6B): HORIZONTAL IS SQUARE CUT, BUTTED TO SIDE, JOINED VIA A SHEAR BLOCK (PART #21). THE SHEAR BLOCK IS FASTENED TO THE VERTICAL FRAME MEMBER WITH FOUR(4) NO. 12 X 1 7/8" FHTF TYPE B SCREWS. THE HORIZONTAL MEMBER IS FASTENED TO THE SHEAR BLOCK WITH THREE(3) NO. 12 X 1" FHTF TYPE AB SCREWS. EACH CORNER IS SEALED WITH DOW 795 SILICONE SEALANT.

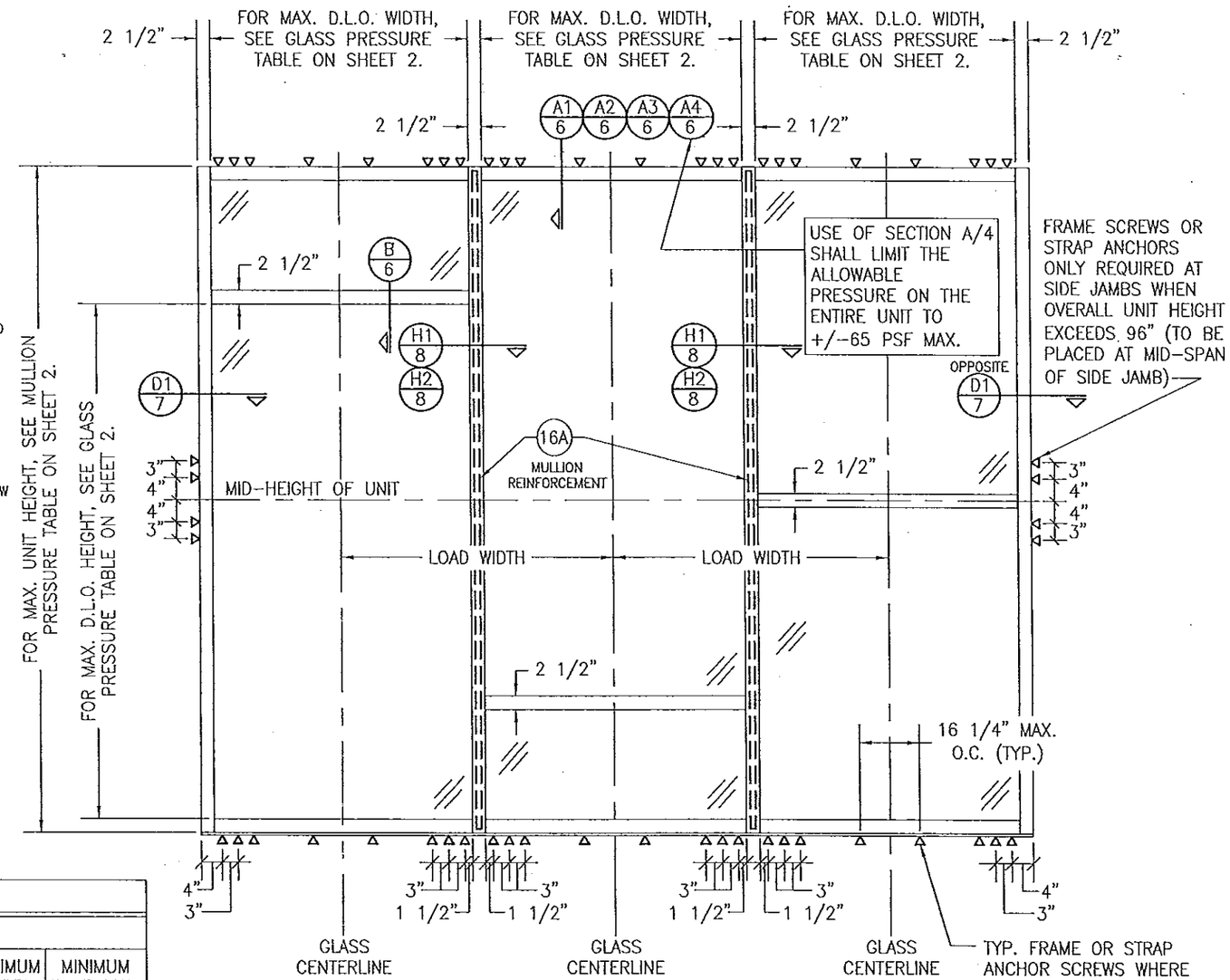

TYP. FRAME OR STRAP ANCHOR SCREWS WHERE SHOWN FOR OPENING TYPE A, C, D OR E. SEE "FRAME ANCHOR REQUIREMENTS TABLE" ON THIS SHEET FOR SCREW REQUIREMENTS (STRAP ANCHORS ARE NOT APPLICABLE AT SILL.)

EXTERIOR ELEVATION
MULTIPLE FIXED PANEL STORE FRONT ASSEMBLY
(WHEN ANCHORED TO WOOD, METAL STUD, CONCRETE OR CMU)

SCALE: 1/2"=1'-0"

HORIZONTAL STACKING & OVERALL UNIT WIDTH IS UNLIMITED PROVIDING DIMENSIONS SPECIFIED ARE NOT EXCEEDED. NUMBER OF VERTICAL PANELS IS UNLIMITED BUT MUST FIT INSIDE MAXIMUM UNIT HEIGHT SHOWN.

NOTE: CMU IS APPLICABLE ONLY AT SIDES.

FRAME ANCHOR REQUIREMENTS TABLE

FRAME & STRAP ANCHOR SCREWS

OPENING TYPE	OPENING TYPE (SUBSTRATE)	FRAME TO OPENING FASTENER TYPE	MINIMUM EMBED	MINIMUM EDGE DIST.
A	MIN. 2X6 WOOD FRAME OR BUCK (MIN. GR. 3 & G=0.55)	(4) NO. 14 SMS OR WOOD SCREW	1 1/4"	3/4"
B	MIN. 1/8" THK A36 STEEL	1/4" GR. 5 SELF TAP/DRILL SCREW	FULL	1/2"
C	MIN. 3000 PSI CONCRETE	(1) 1/4" CONCRETE SCREW	1 1/2"	2 1/2"
D	MIN. 16 GA. 33 KSI METAL STUD	1/4" GR. 5 SELF TAP/DRILL SCREW	FULL	1/2"
E	MIN. C-90 CMU	(1) 1/4" CONCRETE SCREW	1 1/4"	2 1/2"
(3) F	MIN. 3000 PSI CONCRETE	(2) 3/8" WEDGE/SLEEVE ANCHOR	2 1/2"	3"

(1) CONCRETE SCREWS SHALL BE ELCO ULTRACONS, ELCO CRETE-FLEX, ITW RAMSET/RED HEAD TAPCONS OR HILTI KWIK-CON II (HARDENED STEEL OR S.S.).
(2) WEDGE/SLEEVE ANCHORS SHALL BE RAMSET/RED HEAD DYNABOLT, HILTI KWIK-BOLT 3, OR POWERS RAWL POWER BOLT (STEEL OR S.S.)
(3) ANCHOR TYPE "F" IS ONLY APPLICABLE FOR USE WITH THE SILL ANCHOR BLOCK AT THE VERTICAL DOOR MULLION BOTTOM END.
(4) WHILE 1/4" MAX. SHIM GAP IS SPECIFIED IN THE SECTIONS, A 3/8" SHIM GAP MAY BE USED WITH ALL SUBSTRATES PROVIDING THE SCREWS ARE AS SPECIFIED IN THIS TABLE EXCEPT THAT THE SCREWS TO WOOD SUBSTRATE MUST BE 1/4"-14 GRADE 5 SCREWS.

PRODUCT RENEWED as complying with the Florida Building Code Acceptance No 13-0530.16 Expiration Date 04/15/2019 By Miami Dade Product Control

PRODUCT REVISED as complying with the Florida Building Code Acceptance No 14-0430.28 Expiration Date 04/15/2019 By Miami Dade Product Control

WARREN W. SCHAEFER LICENSE No. 44135 STATE OF FLORIDA PROFESSIONAL ENGINEER

DRAWN BY: W.R.M.	CHECKED BY: W.W.S.
PLOT: 1=24	DATE: 01/27/09

NO.	REVISION DESCRIPTION	BY	DATE
A1	UPDATE PER NEW TESTING	WWS	06/07/11
B1	CORRECTED PARTS INFORMATION	WWS	02/25/13

DRAWING TITLE: IR500 ALUMINUM STORE FRONT SYSTEM – LARGE MISSILE IMPACT

MANUFACTURER: KAWNEER COMPANY, INC. 555 GUTHRIDGE COURT NORCROSS, GA 30092 770-449-5555

CONSULTANTS: W. W. SCHAEFER ENGINEERING & CONSULTING, P.A. (CA 6809) 7480 150TH COURT NORTH PALM BEACH GARDENS, FL 33418 PHONE: 561-744-3424

CERTIFICATION: FEB 25 2013 WARREN W. SCHAEFER, P.E. NO. 44135

DRAWING NO. 1633 REV. B

SHEET NO. 1 OF 10

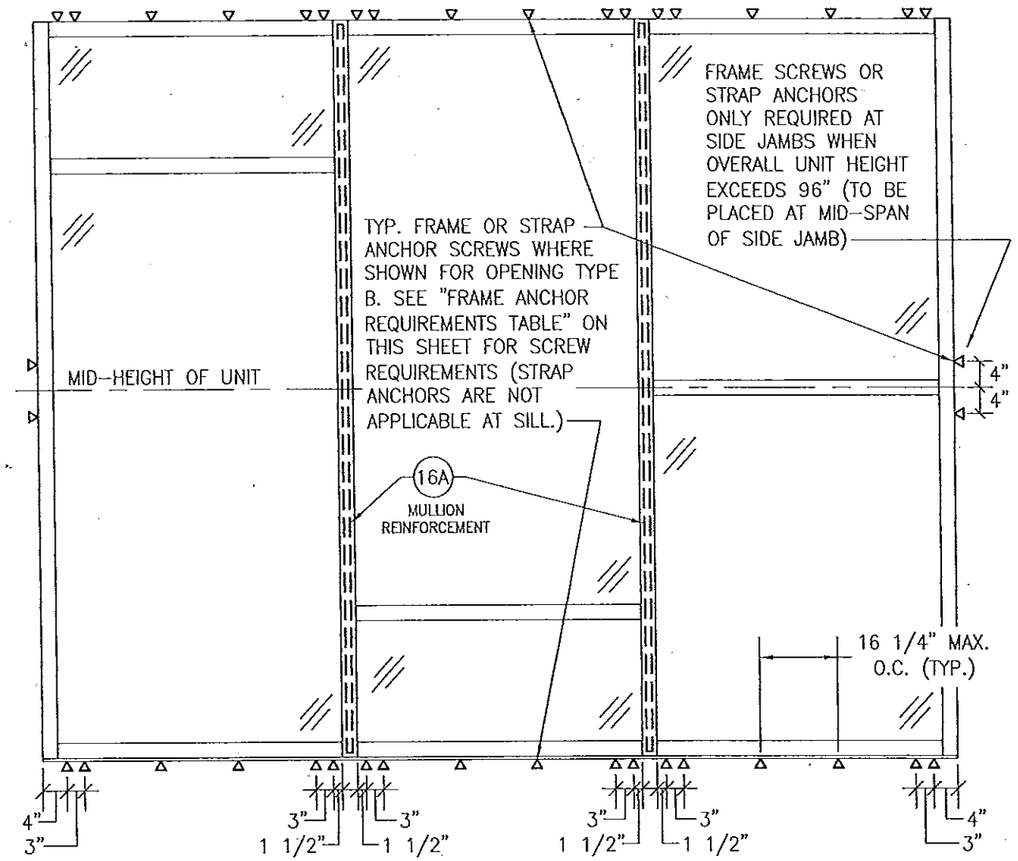

EXTERIOR ELEVATION
MULTIPLE FIXED PANEL STORE FRONT ASSEMBLY
(WHEN ANCHORED TO STEEL)
SCALE: 1/2"=1'-0"

* FOR ALL FRAMING & D.L.O. DIMENSIONS AND OTHER INFORMATION NOT SHOWN, SEE ELEVATION ON SHEET 1.
* IF SILL IS CONCRETE, SEE ELEVATION ON SHEET 1 FOR SILL ANCHORAGE REQUIREMENTS.

MULLION ALLOWABLE DESIGN PRESSURE

MAXIMUM UNIT HEIGHT (IN.)	MAXIMUM LOAD WIDTH (IN.)	ALLOWABLE PRESSURE (+/- PSF)	
		NON REINFORCED	REINFORCED
120	60	N/A	54.7
	54	N/A	60.8
	50 1/2	N/A	65.0
	48	N/A	68.4
	42	N/A	78.2
	36	N/A	90.0
108	60	N/A	63.2
	54	N/A	70.2
	50 1/2	N/A	75.1
	48	N/A	79.0
	42	N/A	90.0
102	60	N/A	75.0
	54	N/A	83.4
	50 1/2	N/A	89.1
	48	N/A	90.0
96	60	90.0	90.0

NOTES:
1. SEE ELEVATIONS FOR DIMENSIONING OF LOAD WIDTH.
2. ALLOWABLE UNIT PRESSURE SHALL BE THE LESSER OF THE PRESSURE SHOWN IN THIS TABLE & THAT SPECIFIED FOR THE GLASS.
3. "N/A" DESIGNATES A SIZE NOT APPLICABLE TO THAT REINFORCEMENT CONDITION.
4. SEE SECTION H2/8 FOR DETAIL OF NON-REINFORCED MULLION & SECTION H1/8 FOR REINFORCED MULLION.

GLASS ALLOWABLE PRESSURE TABLE

MAXIMUM D.L.O. HEIGHT (IN.)	MAXIMUM D.L.O. WIDTH (IN.)	ALLOWABLE PRESSURE (+/- PSF)	
		GLASS OPTION 1, 2 & 5	GLASS OPTION 3 & 4
91	57 1/2	N/A	90
92 3/4	48	65	90
97	54	N/A	90
97	45 3/4	65	90
103	50 3/4	N/A	90
103	43 1/4	65	90
109	48	N/A	90
109	40 3/4	65	90
115	45 1/2	N/A	90
115	38 3/4	65	90

NOTES:
1. SEE ELEVATIONS FOR DIMENSIONING OF D.L.O. HEIGHT & WIDTH.
2. ALLOWABLE UNIT PRESSURE SHALL BE THE LESSER OF THE PRESSURE SHOWN IN THIS TABLE & THAT SPECIFIED FOR THE VERTICAL MULLIONS.
3. "N/A" DESIGNATES A SIZE NOT APPLICABLE TO THAT REINFORCEMENT CONDITION.

PRODUCT REVISED
as complying with the Florida
Building Code
Acceptance No 14-0430.28
Expiration Date 04/15/2019
By
Miami Dade Product Control

PRODUCT RENEWED
as complying with the Florida
Building Code
Acceptance No 13-0530.16
Expiration Date 04/15/2019
By
Miami Dade Product Control

WARREN W. SCHAEFER ★ LICENSE No. 44135 STATE OF FLORIDA ★ PROFESSIONAL ENGINEER

DRAWN BY: W.R.W.	CHECKED BY: W.W.S.
PLOT: 1=24	DATE: 01/27/09

NO.	REVISION DESCRIPTION	BY	DATE

DRAWING TITLE
IR500 ALUMINUM STORE FRONT SYSTEM - LARGE MISSILE IMPACT

MANUFACTURER
KAWNEER COMPANY, INC.
555 GUTHRIDGE COURT
NORCROSS, GA 30092
770-449-5555

CONSULTANTS
W. W. SCHAEFER ENGINEERING & CONSULTING, P.A. (CA 6809)
7480 150TH COURT NORTH
PALM BEACH GARDENS, FL 33418
PHONE: 561-744-3424

CERTIFICATION
FEB 25 2013
WARREN W. SCHAEFER, P.E.
P.E. NO. 44135

DRAWING NO. 1633
REV. B
SHEET NO. 2 OF 10

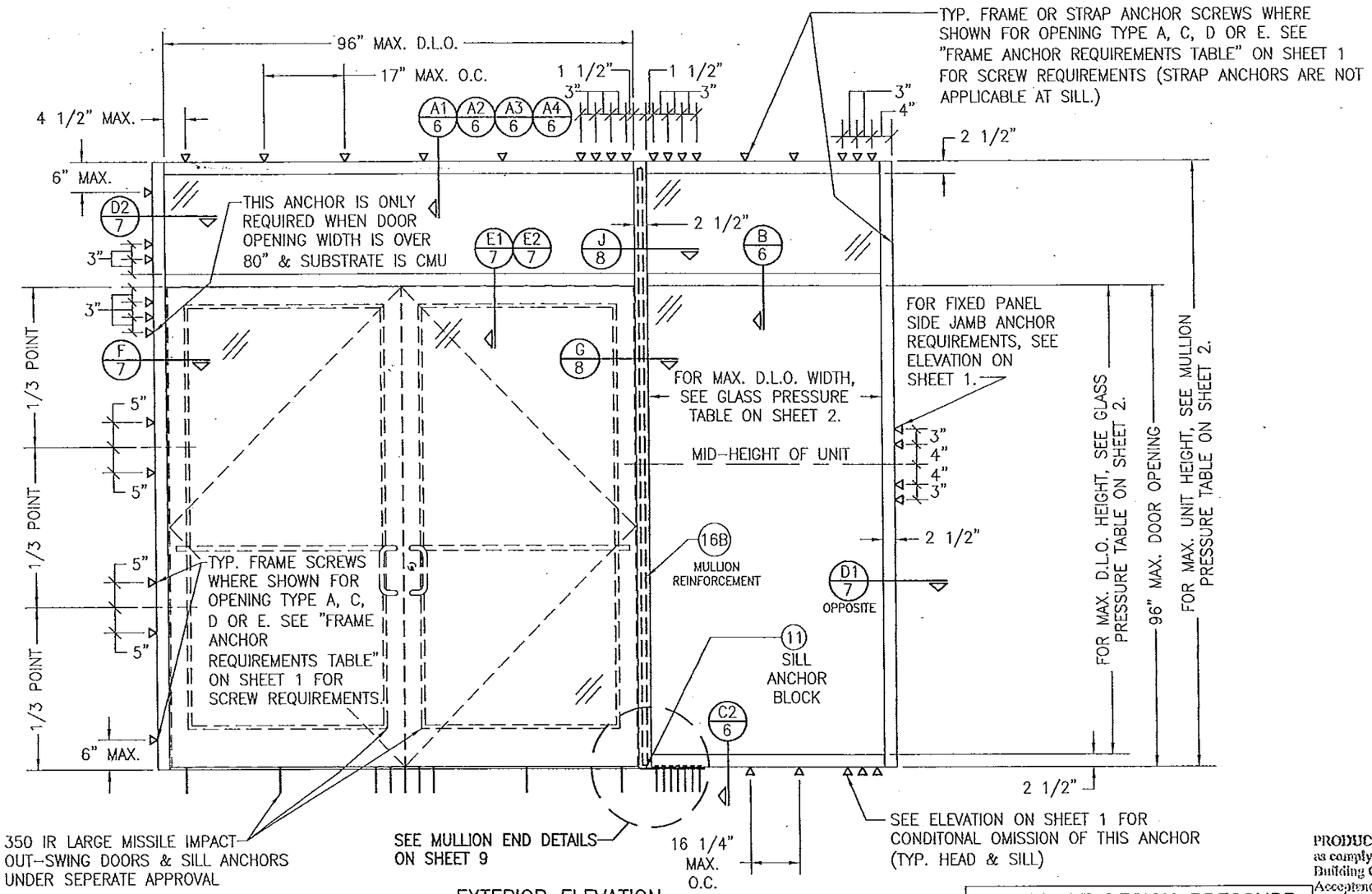

EXTERIOR ELEVATION
STORE FRONT ASSEMBLY WITH DOORS & TRANSOM
(WHEN ANCHORED TO WOOD, METAL STUD, COINCRETE OR CMU)

SCALE: 1/2"=1'-0"

* SINGLE SIDELIGHT SHOWN, MULTIPLE SIDELIGHT CONDITION ALSO APPLIES WITH SIDELIGHT AT ONE OR BOTH SIDES.
* DOUBLE DOOR CONDITION SHOWN, SINGLE DOOR CONDITION ALSO APPLIES.
* HORIZONTAL STACKING & OVERALL UNIT WIDTH IS UNLIMITED. NUMBER OF VERTICAL PANELS IS UNLIMITED BUT MUST FIT INSIDE MAXIMUM FRAME HEIGHT SHOWN.

ALLOWABLE DESIGN PRESSURE (DOOR UNITS)
+/-65 PSF
ONLY THE DOOR/TRANSOM AREA & THE PANEL SECTIONS DIRECTLY NEXT TO THE DOOR AREA ARE RESTRICTED TO +/-65 PSF. FOR ALLOWABLE PRESSURE ON GLASS PANEL AREAS OF THE STOREFRONT ASSEMBLY AWAY FROM THE DOORS, SEE GLASS AND MULLION PRESSURE TABLES ON SHEET 2.

PRODUCT REVISED
as complying with the Florida Building Code
Acceptance No 14-0430.28
Expiration Date 04/15/2019
By
Miami Dade Product Control

PRODUCT RENEWED
as complying with the Florida Building Code
Acceptance No 13-0530.16
Expiration Date 04/15/2019
By
Miami Dade Product Control

WARREN W. SCHAEFER LICENSE No. 44135 STATE OF FLORIDA PROFESSIONAL ENGINEER

NO.	REVISION DESCRIPTION	BY:	DATE

DRAWN BY: W.R.M. | CHECKED BY: W.W.S.
PLOT: 1=24 | DATE: 01/27/09

DRAWING TITLE
IR500 ALUMINUM STORE FRONT SYSTEM – LARGE MISSILE IMPACT

MANUFACTURER
KAWNEER COMPANY, INC.
555 GUTHRIDGE COURT
NORCROSS, GA 30092
770-449-5555

CONSULTANTS
W. W. SCHAEFER ENGINEERING & CONSULTING, P.A. (CA 6809)
7480 150TH COURT NORTH
PALM BEACH GARDENS, FL 33418
PHONE: 561-744-3424

CERTIFICATION
FEB 25 2013
WARREN W. SCHAEFER P.E.
P.E. NO. 44135

DRAWING NO. 1633 | REV. B
SHEET NO. 3 OF 10

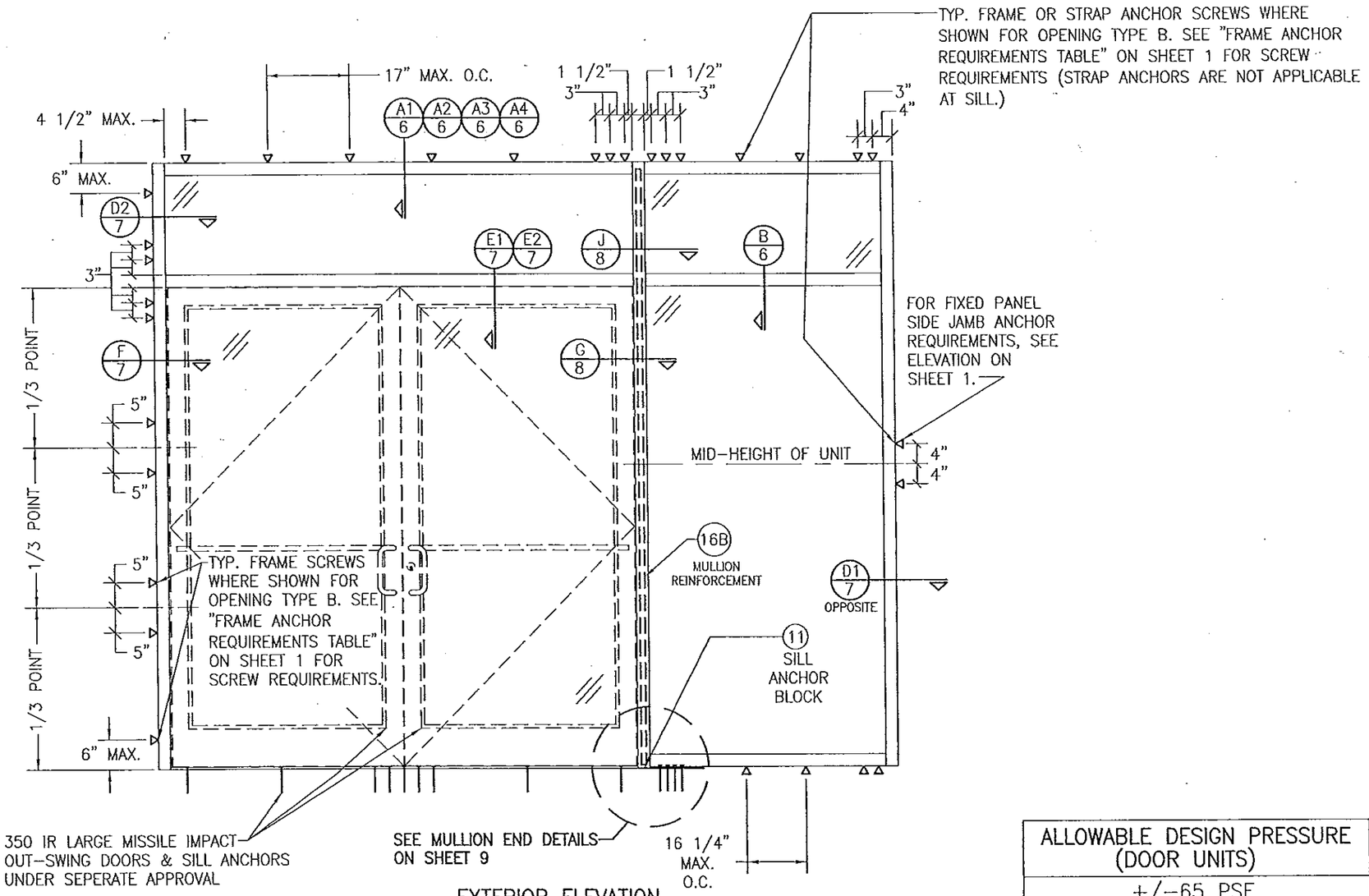

EXTERIOR ELEVATION
STORE FRONT ASSEMBLY WITH DOORS & TRANSOM (WHEN ANCHORED TO STEEL)

SCALE: 1/2"=1'-0"

* SINGLE SIDELIGHT SHOWN, MULTIPLE SIDELIGHT CONDITION ALSO APPLIES WITH SIDELIGHT AT ONE OR BOTH SIDES.
* DOUBLE DOOR CONDITION SHOWN, SINGLE DOOR CONDITION ALSO APPLIES.
* HORIZONTAL STACKING & OVERALL UNIT WIDTH IS UNLIMITED. NUMBER OF VERTICAL PANELS IS UNLIMITED BUT MUST FIT INSIDE MAXIMUM FRAME HEIGHT SHOWN.
* FOR ALL FRAMING & D.L.O. DIMENSIONS, SEE ELEVATION ON SHEET 3.

ALLOWABLE DESIGN PRESSURE (DOOR UNITS)
+/--65 PSF
ONLY THE DOOR/TRANSOM AREA & THE PANEL SECTIONS DIRECTLY NEXT TO THE DOOR AREA ARE RESTRICTED TO +/--65 PSF. FOR ALLOWABLE PRESSURE ON GLASS PANEL AREAS OF THE STOREFRONT ASSEMBLY AWAY FROM THE DOORS, SEE GLASS AND MULLION PRESSURE TABLES ON SHEET 2.

PRODUCT REVISED
as complying with the Florida Building Code
Acceptance No 14-0430.28
Expiration Date 04/15/2019
By
Miami Dade Product Control

PRODUCT RENEWED
as complying with the Florida Building Code
Acceptance No 13-0530.16
Expiration Date 04/15/2019
By
Miami Dade Product Control

WARREN W. SCHAEFER ★ ENGINEER ★ LICENSE No. 44135 STATE OF FLORIDA ★ PROFESSIONAL

DRAWN BY: W.R.W.	CHECKED BY: W.W.S.
PLOT: 1=24	DATE: 01/27/09

NO.	REVISION DESCRIPTION	BY	DATE

DRAWING TITLE
IR500 ALUMINUM STORE FRONT SYSTEM – LARGE MISSILE IMPACT

MANUFACTURER
KAWNEER COMPANY, INC.
555 GUTHRIDGE COURT
NORCROSS, GA 30092
770-449-5555

CONSULTANTS
W. W. SCHAEFER ENGINEERING & CONSULTING, P.A. (CA 6809)
7480 150TH COURT NORTH
PALM BEACH GARDENS, FL 33418
PHONE: 561-744-3424

CERTIFICATION
FEB 25 2013
WARREN W. SCHAEFER, P.E.
P.E. NO. 44135

DRAWING NO. 1633
REV. B
SHEET NO. 4 OF 10

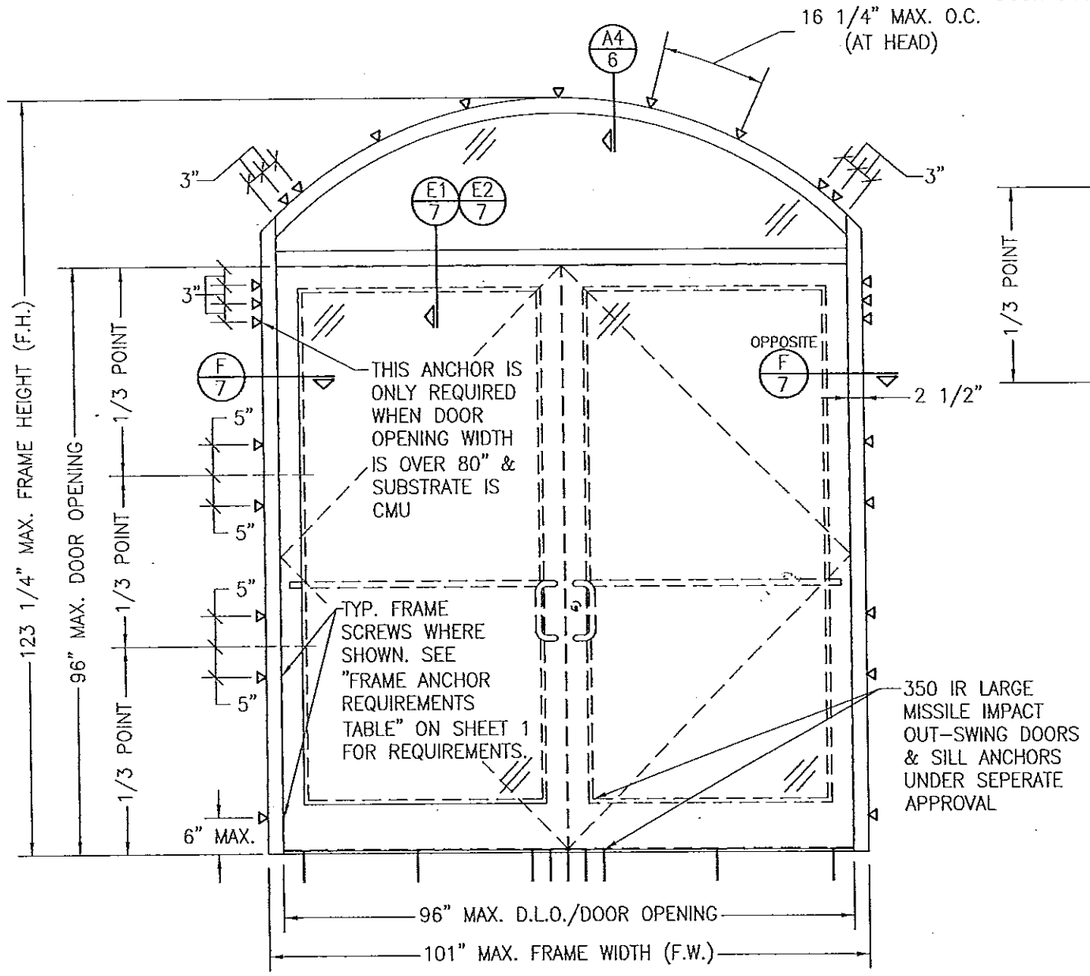

EXTERIOR ELEVATION
STORE FRONT FRAMING WITH DOORS & EYEBROW TRANSOM
(APPLICABLE WITH ALL SUBSTRATES)

(DOUBLE DOOR CONDITION SHOWN, SINGLE DOOR CONDITION ALSO APPLIES)
SCALE: 1/2"=1'-0"

TYP. FRAME OR STRAP ANCHOR SCREWS WHERE SHOWN. SEE "FRAME ANCHOR REQUIREMENTS TABLE" ON SHEET 1 FOR REQUIREMENTS (STRAP ANCHORS ARE NOT APPLICABLE AT DOOR SIDE JAMBS AND SILL).

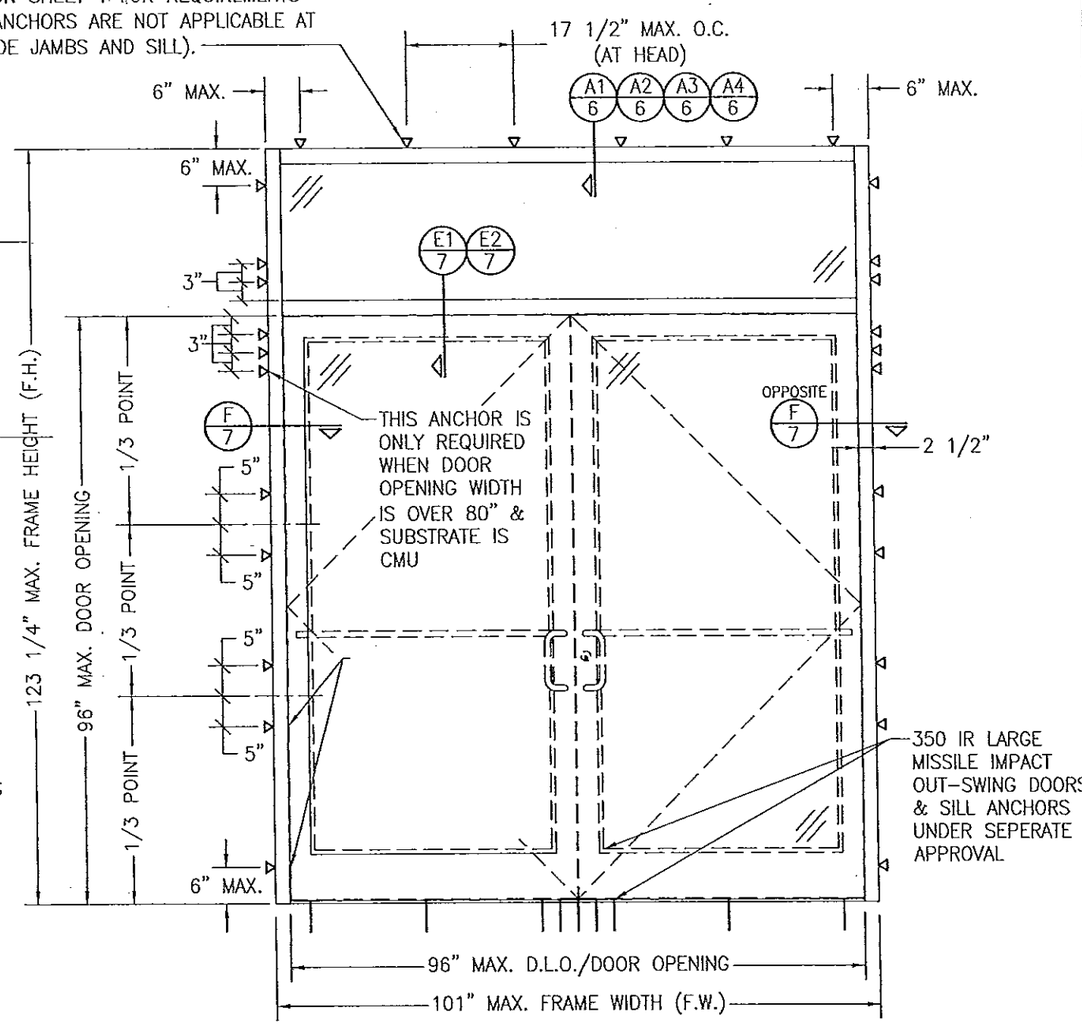

EXTERIOR ELEVATION
STORE FRONT FRAMING WITH DOORS & RECTANGULAR TRANSOM
(APPLICABLE WITH ALL SUBSTRATES)

(DOUBLE DOOR CONDITION SHOWN, SINGLE DOOR CONDITION ALSO APPLIES)
SCALE: 1/2"=1'-0"

ALLOWABLE DESIGN PRESSURE (DOOR WITH TRANSOM UNITS)
+/-65 PSF

PRODUCT REVISED
as complying with the Florida Building Code
Acceptance No 14-0430.28
Expiration Date 04/15/2019
By
Miami Dade Product Control

PRODUCT RENEWED
as complying with the Florida Building Code
Acceptance No 13-0530.16
Expiration Date 04/15/2019
By
Miami Dade Product Control

WARREN W. SCHAEFER LICENSE No. 44135 STATE OF FLORIDA PROFESSIONAL ENGINEER

DRAWN BY: W.R.M.	CHECKED BY: W.W.S.
PLOT: 1=24	DATE: 01/27/09

NO.	REVISION DESCRIPTION	BY	DATE

DRAWING TITLE
IR500 ALUMINUM STORE FRONT SYSTEM - LARGE MISSILE IMPACT

MANUFACTURER
KAWNEER COMPANY, INC.
555 GUTHRIDGE COURT
NORCROSS, GA 30092
770-449-5555

CONSULTANTS
W. W. SCHAEFER ENGINEERING & CONSULTING, P.A. (CA 6809)
7480 150TH COURT NORTH
PALM BEACH GARDENS, FL 33418
PHONE: 561-744-3424

CERTIFICATION
FEB 25 2013
WARREN W. SCHAEFER, P.E.
P.E. NO. 44135

DRAWING NO. 1633
REV. B
SHEET NO. 5 OF 10

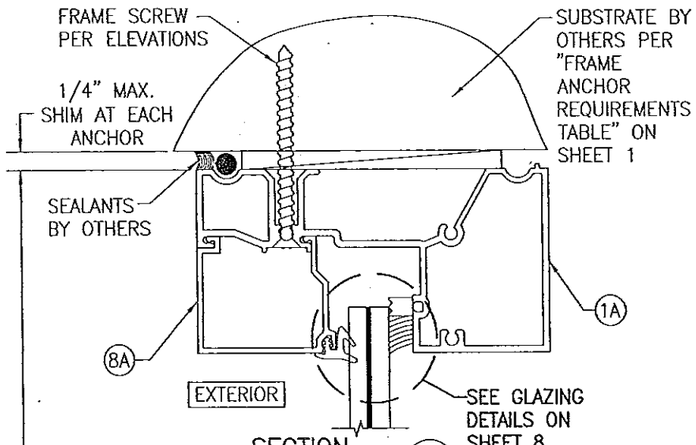

SECTION A1/6
SCALE: 1/2 FULL

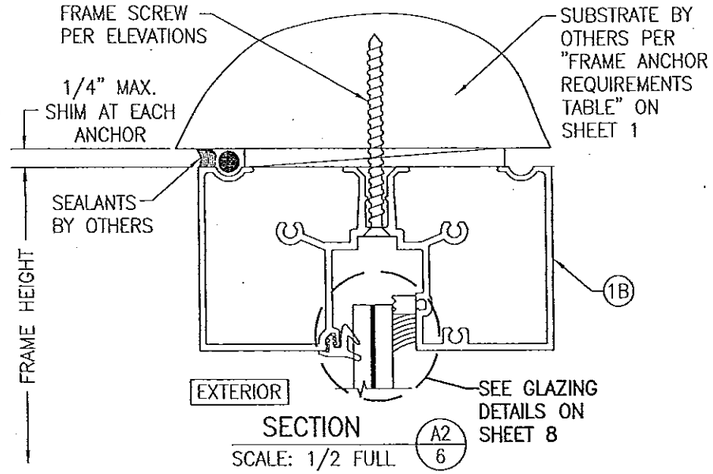

SECTION A2/6
SCALE: 1/2 FULL
(FRAME SCREW INSTALLED)

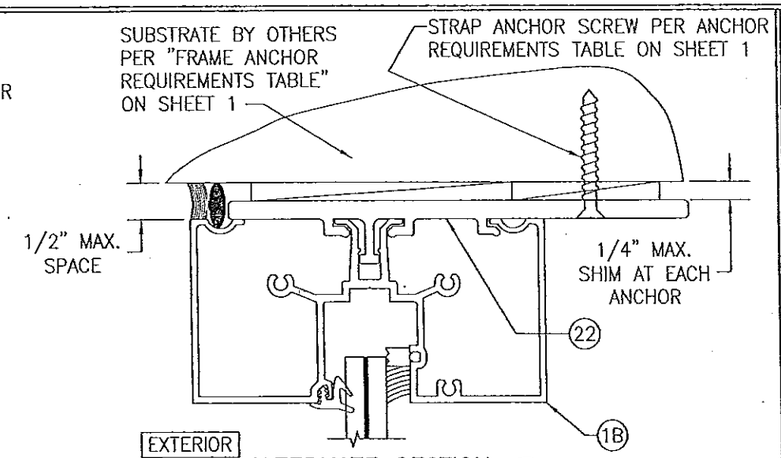

ALTERNATE SECTION A2/6
SCALE: 1/2 FULL
(STRAP ANCHOR INSTALLED)

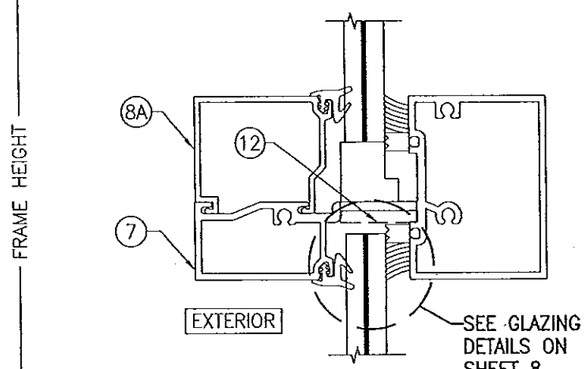

SECTION B/6
SCALE: 1/2 FULL

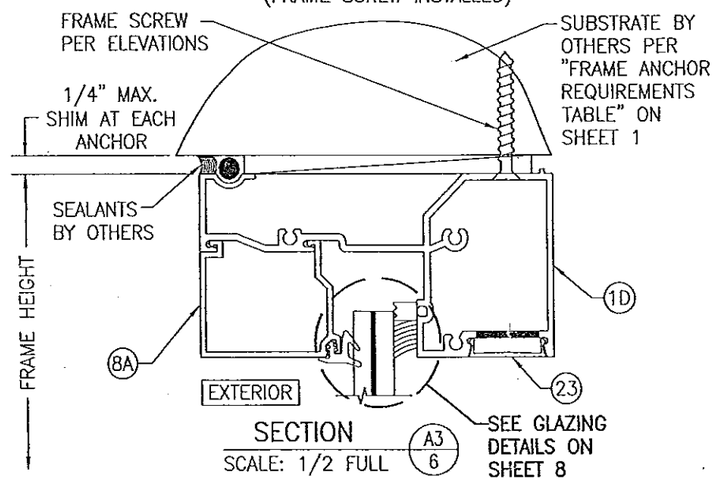

SECTION A3/6
SCALE: 1/2 FULL

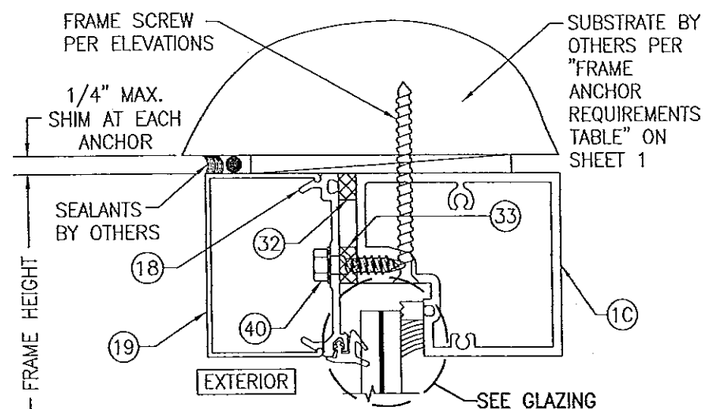

SECTION A4/6
SCALE: 1/2 FULL

WHEN THIS HEAD SECTION IS USED, THE ALLOWABLE DESIGN PRESSURE ON THE ENTIRE UNIT SHALL BE LIMITED TO MAXIMUM +/-65 PSF.

PRODUCT REVISED
as complying with the Florida Building Code
Acceptance No 14-0430.28
Expiration Date 04/15/2019
By
Miami Dade Product Control

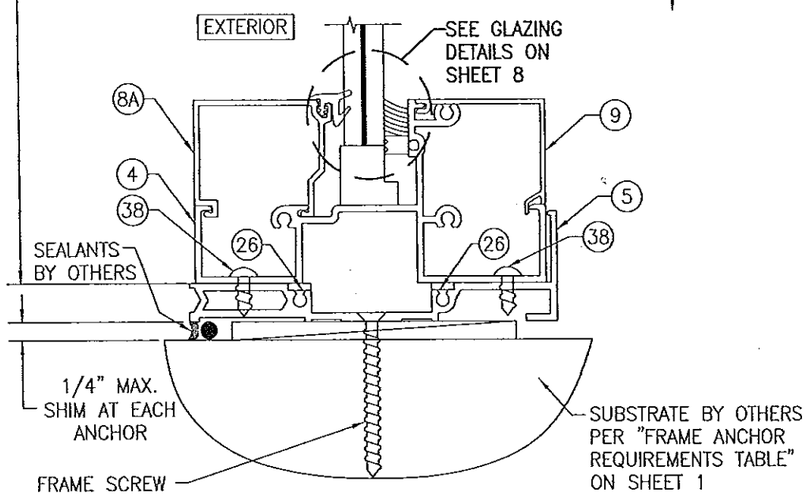

SECTION C1/6
SCALE: 1/2 FULL

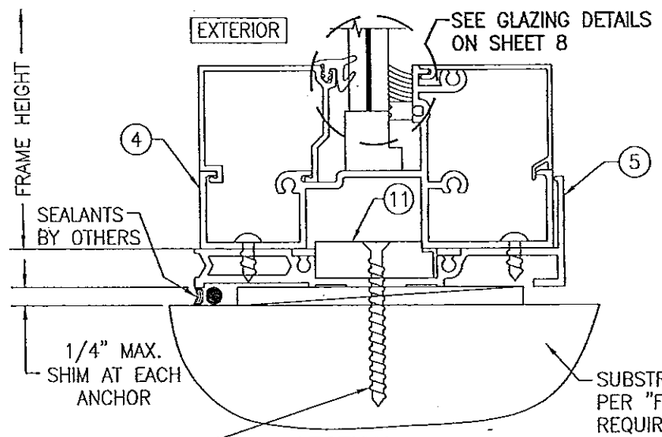

SECTION C2/6
SCALE: 1/2 FULL
(FOR DETAIL NOT SHOWN, SEE SECTION C1/6)

SEE FOOTNOTE #4 BELOW ANCHOR REQUIREMENTS TABLE ON SHEET 1 FOR THE OPTION OF HAVING A 3/8" PERIMETER SHIM GAP IN LIEU OF THE 1/4" SPECIFIED IN THESE SECTIONS.

PRODUCT RENEWED
as complying with the Florida Building Code
Acceptance No 13-0530.16
Expiration Date 04/15/2019
By
Miami Dade Product Control

WARREN W. SCHAEFER LICENSE No. 44135 STATE OF FLORIDA PROFESSIONAL ENGINEER

NO.	REVISION DESCRIPTION	BY	DATE

DRAWN BY: W.R.M. | CHECKED BY: W.W.S.
PLOT: 1=2 | DATE: 01/27/09

DRAWING TITLE
IR500 ALUMINUM STORE FRONT SYSTEM – LARGE MISSILE IMPACT

MANUFACTURER
KAWNEER COMPANY, INC.
555 GUTHRIDGE COURT
NORCROSS, GA 30092
770-449-5555

CONSULTANTS
W. W. SCHAEFER ENGINEERING & CONSULTING, P.A. (CA 6809)
7480 150TH COURT NORTH
PALM BEACH GARDENS, FL 33418
PHONE: 561-744-5424

CERTIFICATION
FEB 25 2013
WARREN W. SCHAEFER, P.E.
P.E. NO. 44135

DRAWING NO. 1633 | REV. B
SHEET NO. 6 OF 10

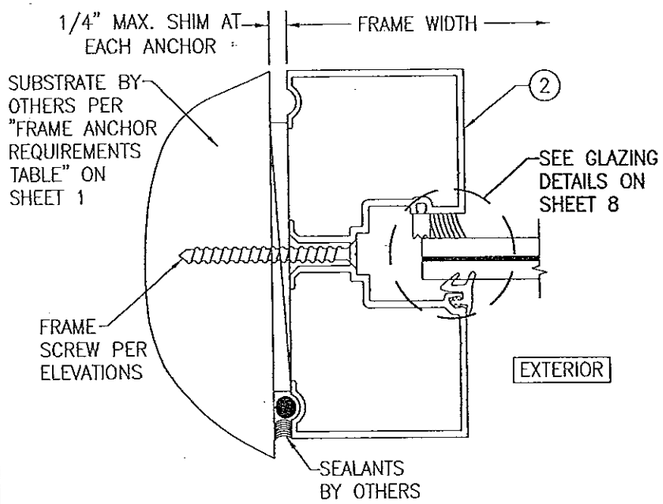

SECTION D1/7
SCALE: 1/2 FULL
(FRAME SCREW INSTALLED)

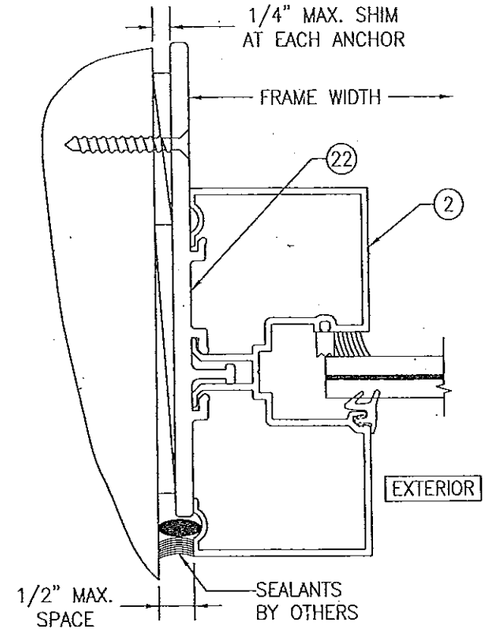

ALTERNATE SECTION D1/7
SCALE: 1/2 FULL
(STRAP ANCHOR INSTALLED)

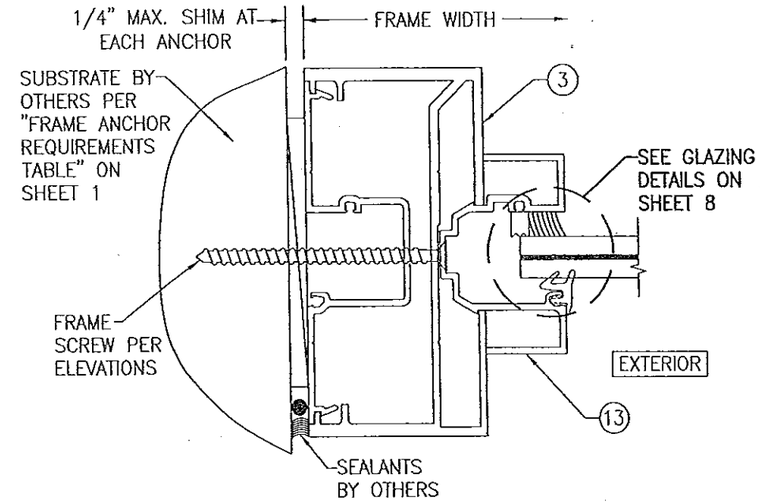

SECTION D2/7
SCALE: 1/2 FULL

SEE FOOTNOTE #4 BELOW ANCHOR REQUIREMENTS TABLE ON SHEET 1 FOR THE OPTION OF HAVING A 3/8" PERIMETER SHIM GAP IN LIEU OF THE 1/4" SPECIFIED IN THESE SECTIONS.

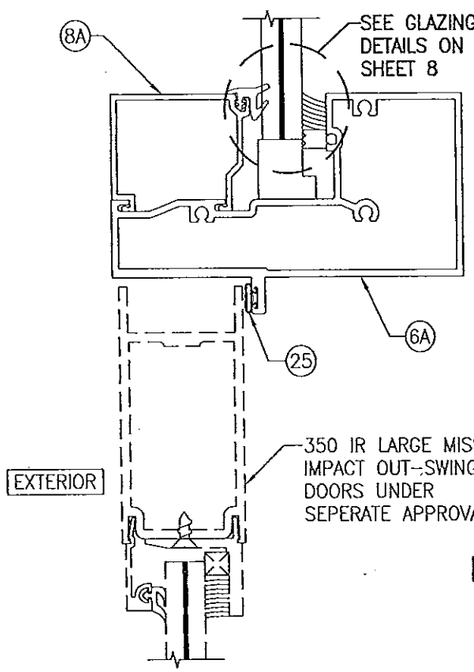

SECTION E1/7
SCALE: 1/2 FULL

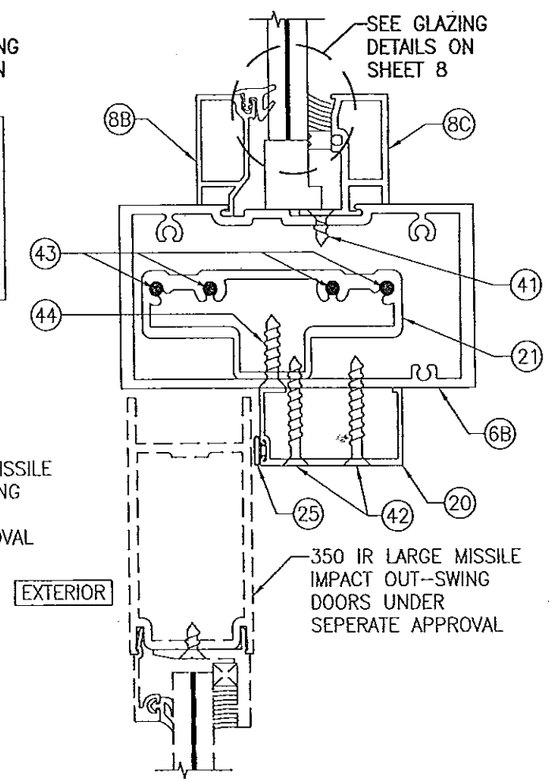

SECTION E2/7
SCALE: 1/2 FULL

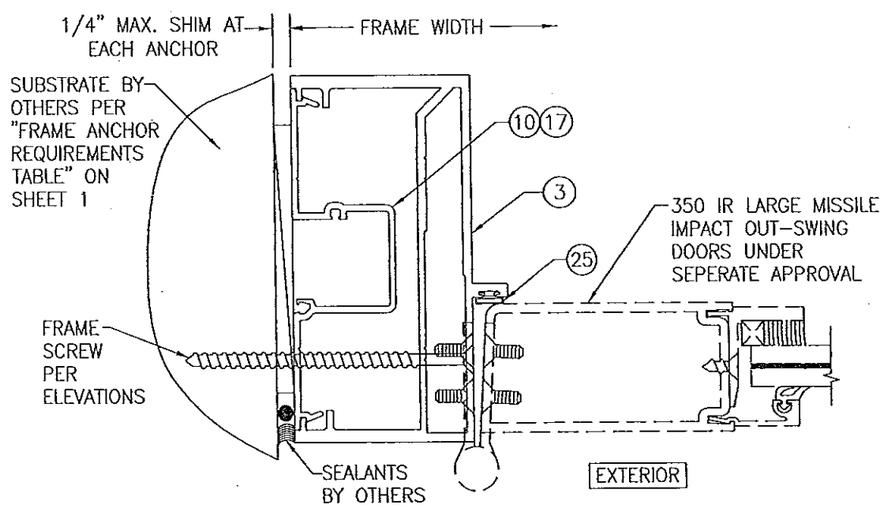

SECTION F/7
SCALE: 1/2 FULL

PRODUCT RENEWED
as complying with the Florida Building Code
Acceptance No 13-0530.16
Expiration Date 04/15/2019
By
Miami Dade Product Control

PRODUCT REVISED
as complying with the Florida Building Code
Acceptance No 14-0430.28
Expiration Date 04/15/2019
By
Miami Dade Product Control

WARREN W. SCHAEFER ★ ENGINEER ★ PROFESSIONAL
LICENSE No. 44135
STATE OF FLORIDA

NO.	REVISION DESCRIPTION	BY	DATE

DRAWN BY: W.R.W. | CHECKED BY: W.W.S.
PLOT: 1=2 | DATE: 01/27/09

DRAWING TITLE
IR500 ALUMINUM STORE FRONT SYSTEM – LARGE MISSILE IMPACT

MANUFACTURER
KAWNEER COMPANY, INC.
555 GUTHRIDGE COURT
NORCROSS, GA 30092
770-449-5555

CONSULTANTS
W. W. SCHAEFER ENGINEERING & CONSULTING, P.A. (CA 6809)
7480 150TH COURT NORTH
PALM BEACH GARDENS, FL 33418
PHONE: 561-744-3424

CERTIFICATION
FEB 25 2013
WARREN W. SCHAEFER, P.E.
P.E. NO. 44135

DRAWING NO. 1633 | REV. B
SHEET NO. 7 OF 10

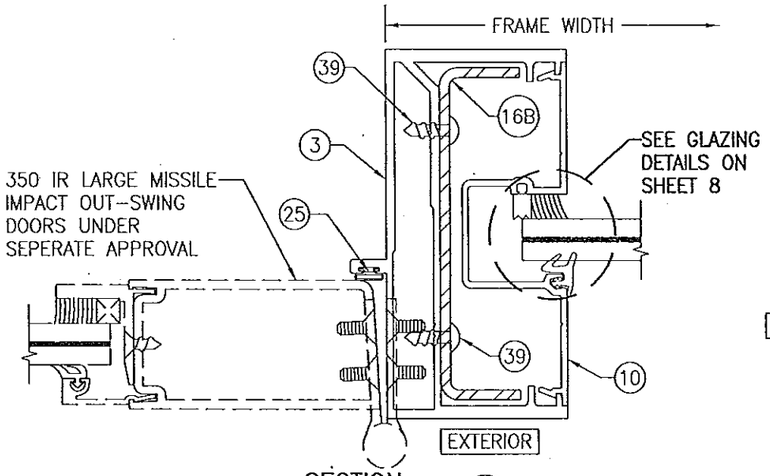

SECTION G / 8
SCALE: 1/2 FULL

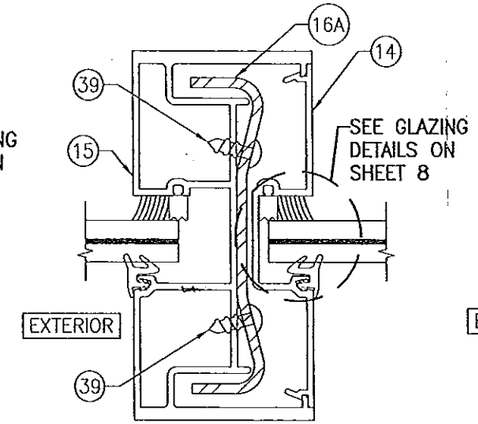

SECTION H1 / 8
SCALE: 1/2 FULL
(REINFORCED MULLION)

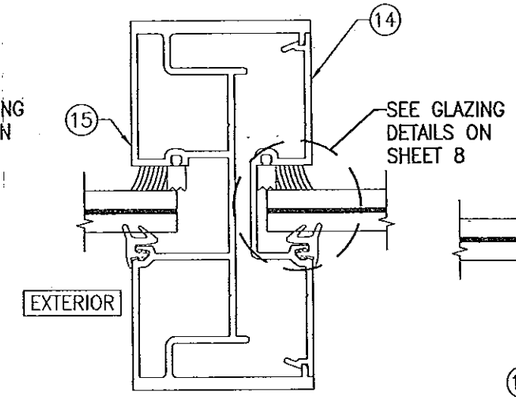

SECTION H2 / 8
SCALE: 1/2 FULL
(NON-REINFORCED MULLION)

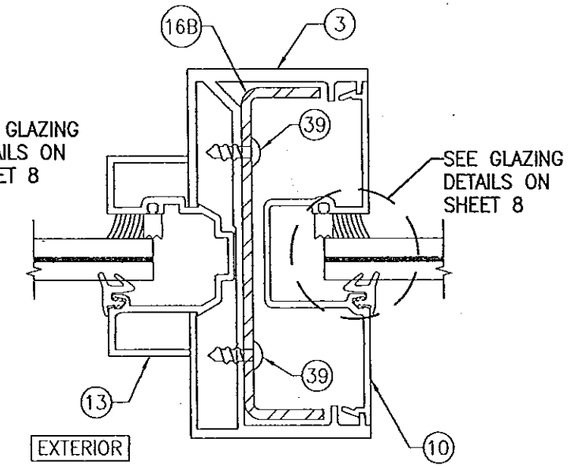

SECTION J / 8
SCALE: 1/2 FULL

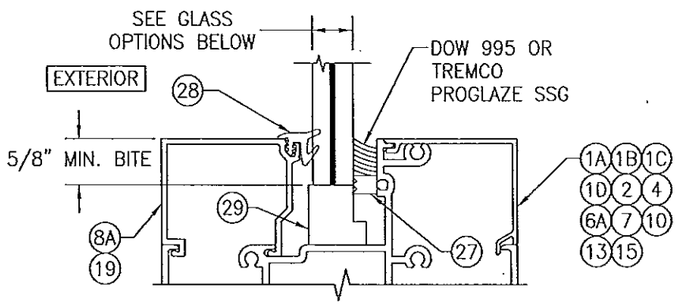

TYP. GLAZING DETAIL
(WET GLAZED; SINGLE GLAZING BEAD CONDITION)

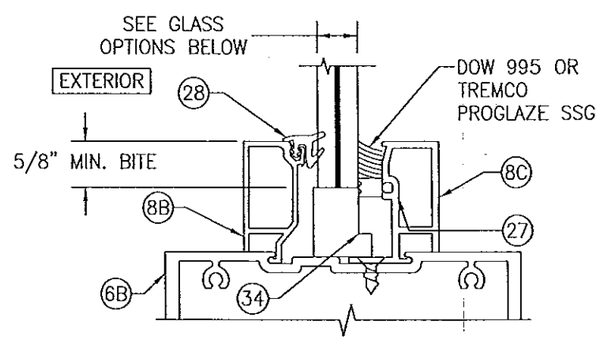

TYP. GLAZING DETAIL
(WET GLAZED; DOUBLE GLAZING BEAD CONDITION)

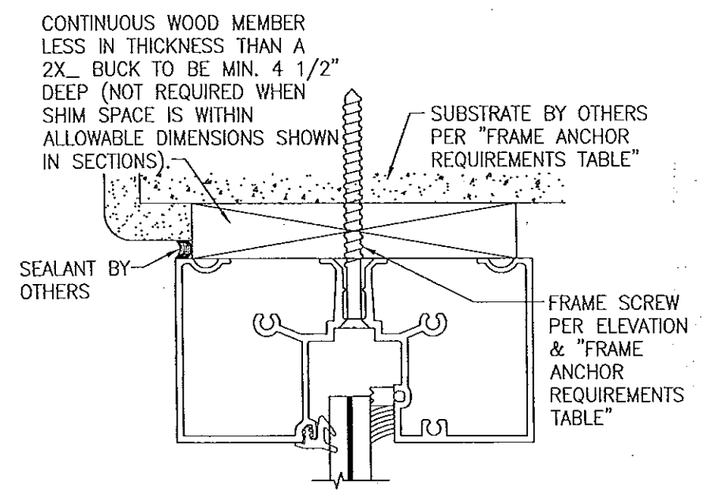

OPTIONAL DIRECT MOUNT DETAIL
TO SUBSTRATE WITH SPACER

* HEAD SECTION SHOWN WITH HEAD FRAME PART #1B; SILL & SIDES WITH OTHER APPLICABLE FRAME PARTS MAY BE INSTALLED THE SAME (NOT APPLICABLE WITH STRAP ANCHOR INSTALLATIONS).

(FOR DETAIL NOT SHOWN, SEE OTHER SECTIONS)

GLASS OPTIONS (WET GLAZED):

OPTION 1: 9/16" THICK LAMINATED GLASS BY EASTMAN (1/4" HT. ST./0.09 SAFLEX PVB/1/4" HT. ST.)
OPTION 2: 9/16" THICK LAMINATED GLASS BY DUPONT (1/4" HT. ST./0.09 DUPONT BUTICITE PVB/1/4" HT. ST.)
OPTION 3: 9/16" THICK LAMINATED GLASS BY DUPONT (1/4" HT. ST./0.09 DUPONT SG/1/4" HT. ST.)
OPTION 4: 9/16" THICK LAMINATED GLASS BY EASTMAN (1/4" HT. ST./0.10 SAFLEX HP/1/4" HT. ST.)

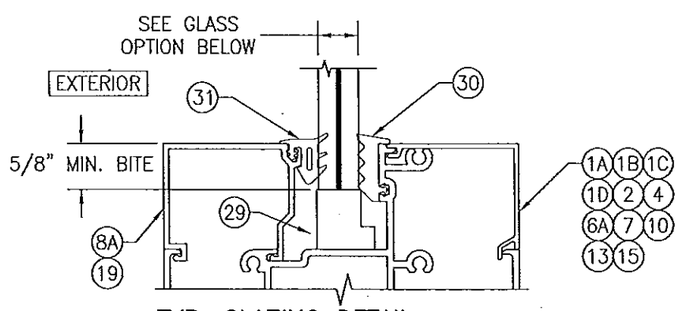

TYP. GLAZING DETAIL
(DRY GLAZED; SINGLE GLAZING BEAD CONDITION)

GLASS OPTION (DRY GLAZED):

OPTION 5: 9/16" THICK LAMINATED GLASS BY DUPONT (1/4" HT. ST./0.09 DUPONT SG/1/4" HT. ST.)

PRODUCT REVISED
as complying with the Florida Building Code
Acceptance No 14-0430.28
Expiration Date 04/15/2019
By
Miami Dade Product Control

PRODUCT RENEWED
as complying with the Florida Building Code
Acceptance No 13-0530.16
Expiration Date 04/15/2019
By
Miami Dade Product Control

WARREN W. SCHAEFER LICENSE No. 44135 STATE OF FLORIDA PROFESSIONAL ENGINEER

NO.	REVISION DESCRIPTION	BY	DATE

DRAWN BY: W.R.M.
CHECKED BY: W.W.S.
PLOT: 1=2
DATE: 01/27/09

DRAWING TITLE: IR500 ALUMINUM STORE FRONT SYSTEM – LARGE MISSILE IMPACT

MANUFACTURER: KAWNEER COMPANY, INC.
555 GUTHRIDGE COURT
NORCROSS, GA 30092
770-449-5555

CONSULTANTS: W. W. SCHAEFER ENGINEERING & CONSULTING, P.A. (CA 6809)
7480 150TH COURT NORTH
PALM BEACH GARDENS, FL 33418
PHONE: 561-744-3424

CERTIFICATION
FEB 25 2013
WARREN W. SCHAEFER, P.E.
P.E. NO. 44135

DRAWING NO. 1633
REV. B
SHEET NO. 8 OF 10

MULLION END CONNECTION DETAILS AT VERTICAL MULLIONS ALONG SIDE DOORS

(TYPICAL AT SILL ONLY)

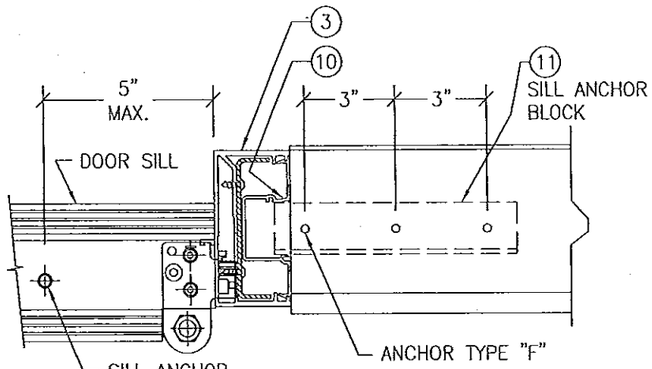

ANCHOR TYPE F

(3 ANCHORS PER SILL ANCHOR BLOCK)

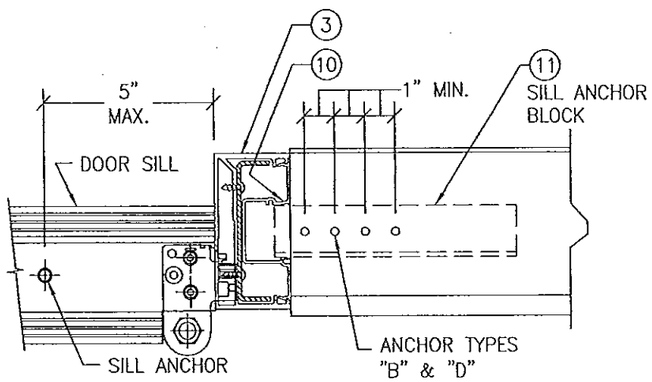

ANCHOR TYPE B

(4 ANCHORS PER SILL ANCHOR BLOCK)

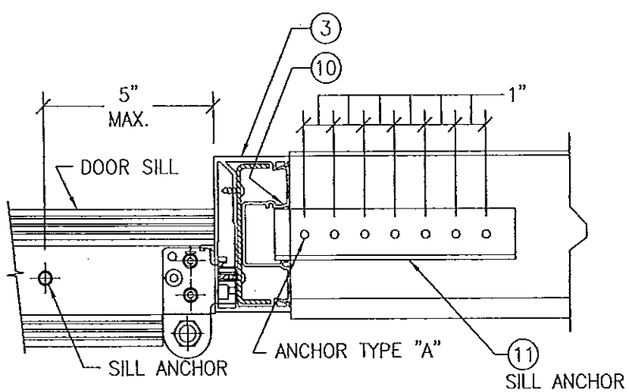

ANCHOR TYPES A & D

(7 ANCHORS PER SILL ANCHOR BLOCK)

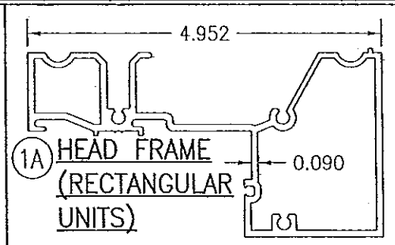

1A HEAD FRAME (RECTANGULAR UNITS)

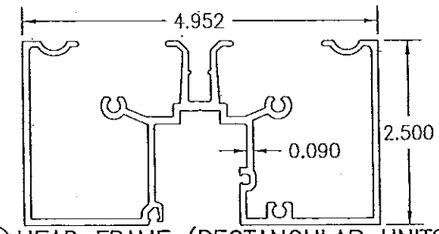

1B HEAD FRAME (RECTANGULAR UNITS)

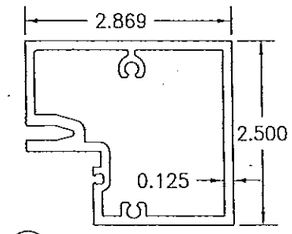

1C HEAD FRAME (RADIUS & RECTANGULAR UNITS)

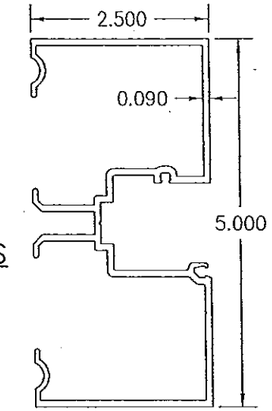

2 JAMB

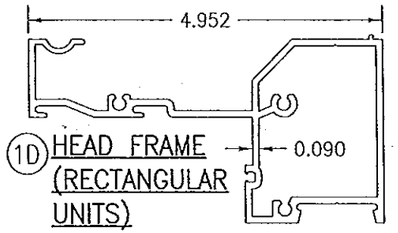

1D HEAD FRAME (RECTANGULAR UNITS)

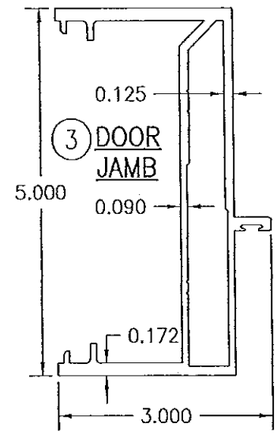

3 DOOR JAMB

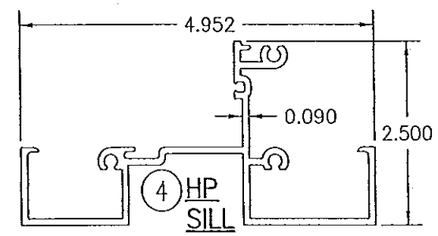

4 HP SILL

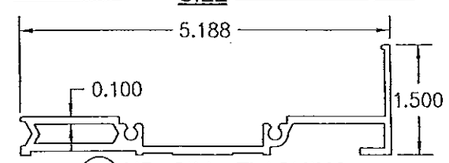

5 HP SILL FLASHING

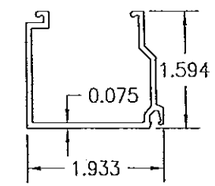

8A GLASS STOP

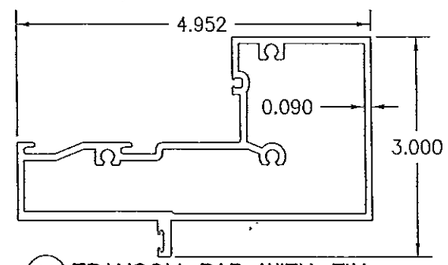

6A TRANSOM BAR WITH FIN

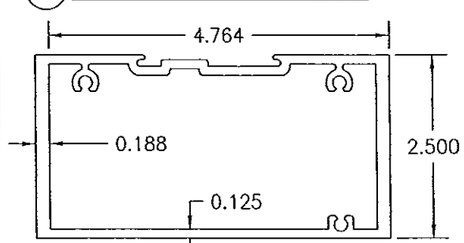

6B C.O.C. BAR WITH OUT FIN

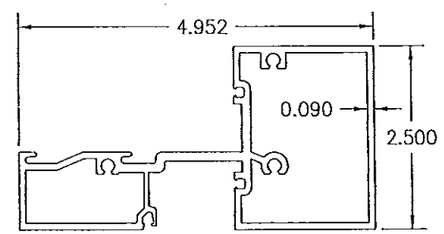

7 HORIZONTAL

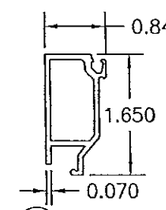

8B GLASS STOP

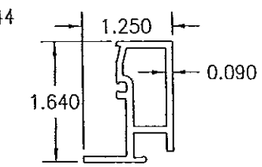

8C GLASS STOP

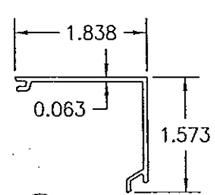

9 HP COVER

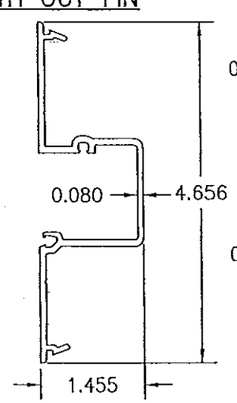

10 DEEP POCKET FILLER

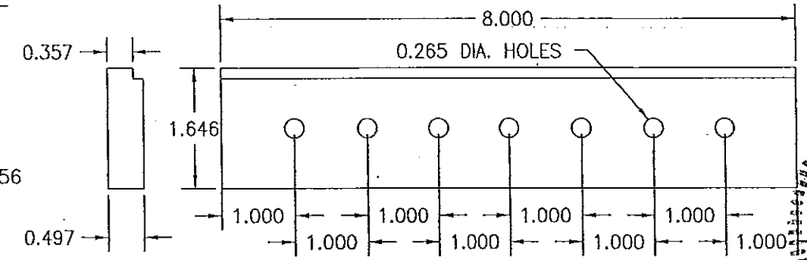

11 ANCHOR BLOCK AT DOOR JAMB

PRODUCT RENEWED
as complying with the Florida
Building Code
Acceptance No 13-0530.16
Expiration Date 04/15/2019
By
Miami Dade Product Control

PRODUCT REVISED
as complying with the Florida
Building Code
Acceptance No 14-0430.28
Expiration Date 04/15/2019
By
Miami Dade Product Control

WARREN W. SCHAEFER ★ LICENSE ★ No. 44135 ★ STATE OF FLORIDA ★ PROFESSIONAL ENGINEER

DRAWN BY: W.R.M.	CHECKED BY: W.W.S.
PLOT: 1=2	DATE: 01/27/09

NO.	REVISION DESCRIPTION	BY	DATE

DRAWING TITLE
IR500 ALUMINUM STORE FRONT SYSTEM – LARGE MISSILE IMPACT

MANUFACTURER
KAWNEER COMPANY, INC.
555 GUTHRIDGE COURT
NORCROSS, GA 30092
770-449-5555

CONSULTANTS
W. SCHAEFER ENGINEERING & CONSULTING, P.A. (CA 6809)
7480 150TH COURT NORTH
PALM BEACH GARDENS, FL 33418
PHONE: 561-744-3424

CERTIFICATION
FEB 25 2013
WARREN W. SCHAEFER P.E. P.E. NO. 44135

DRAWING NO. 1633 REV. B

SHEET NO. 9 OF 10

ITEM #	ITEM DESCRIPTION	MANUFACTURER/NOTES
	PARTS	
1A	HEAD FRAME (RECTANGULAR UNITS)	6063–T6 ALUMINUM
1B	HEAD FRAME (RECTANGULAR UNITS)	6063–T6 ALUMINUM
1C	HEAD FRAME (RADIUS & RECTANGULAR UNITS)	6063–T6 ALUMINUM
1D	HEAD FRAME (RECTANGULAR UNITS)	6063–T6 ALUMINUM
2	JAMB	6063–T6 ALUMINUM
3	DOOR JAMB	6063–T6 ALUMINUM
4	HP SILL	6063–T6 ALUMINUM
5	HP SILL FLASHING	6063–T6 ALUMINUM
6A	TRANSOM BAR WITH FIN	6063–T6 ALUMINUM
6B	C.O.C. TRANSOM BAR	6063–T6 ALUMINUM
7	HORIZONTAL	6063–T6 ALUMINUM
8A	GLASS STOP	6063–T6 ALUMINUM
8B	GLASS STOP	6063–T6 ALUMINUM
8C	GLASS STOP	6063–T6 ALUMINUM
9	HP COVER	6063–T6 ALUMINUM
10	DEEP POCKET FILLER	6063–T6 ALUMINUM
11	ANCHOR BLOCK AT DOOR JAMB	6063–T6 ALUMINUM
12	WATER DEFLECTOR	6063–T6 ALUMINUM
13	POCKET INSERT	6063–T6 ALUMINUM
14	POCKET FILLER	6063–T6 ALUMINUM
15	HW MULLION	6063–T6 ALUMINUM
16A	STEEL REINF.	A36 STEEL
16B	STEEL REINF.	A36 STEEL
17	POCKET INSERT	6063–T6 ALUMINUM
18	PRESSURE PLATE	6063–T6 ALUMINUM
19	PRESSURE PLATE COVER	6063–T6 ALUMINUM
20	DOOR STOP	6063–T6 ALUMINUM
21	SHEAR BLOCK	6063–T6 ALUMINUM (PART #450–140)
22	STRAP ANCHOR	6063–T6 ALUMINUM
23	SNAP–IN FILLER	6063–T6 ALUMINUM
	SEALS AND SEALANTS	
25	DOOR BULB WEATHERING	ALCRYN
26	SILL TO FLASHING GASKET	CCN SPONGE
27	SLIDE IN SPACER	SANTOPRENE (PART #127–012)
28	STANDARD PUSH ON GLAZING GASKET	EPDM (DUROMETER = 70) (PART #027–074)
29	SETTING BLOCK	EPDM
30	INTERIOR FIXED GLAZING GASKET	EPDM (DUROMETER = SPONGE) (PART #127–146)
31	EXTERIOR PUSH IN GLAZING GASKET	EPDM (DUROMETER = 70) (PART #127–147)
32	GASKET	EPDM (DUROMETER = 70)
33	THERMAL SEPARATOR	EPDM (DUROMETER = 70)
34	SETTING BLOCK	EPDM
	FASTENERS	
38	NO. 12 X 7/16" S.S. PHTF SCREW	1.5" & 4.5" FROM ENDS & 16 1/4" MAX. O.C.
39	NO. 12 X 5/8" S.S. PHTF SCREW	4" FROM ENDS (2 ROWS)
40	1/4" X 1" S.S. HWHTF SCREW	3" FROM ENDS & MAX. 9" O.C.
41	NO. 10 X 1/2" S.S. FHTF SCREW	3" FROM ENDS & MAX. 18" O.C.
42	NO. 10 X 1 5/8" S.S. FHTF SCREW	1" FROM ENDS; 4 GROUPED AT MID–SPAN; 16" MAX. BETWEEN
43	NO. 12 X 1 7/8" FHTF SCREW	4 PER SHEAR BLOCK
44	NO. 12 X 1" FHTF SCREW	3 PER SHEAR BLOCK

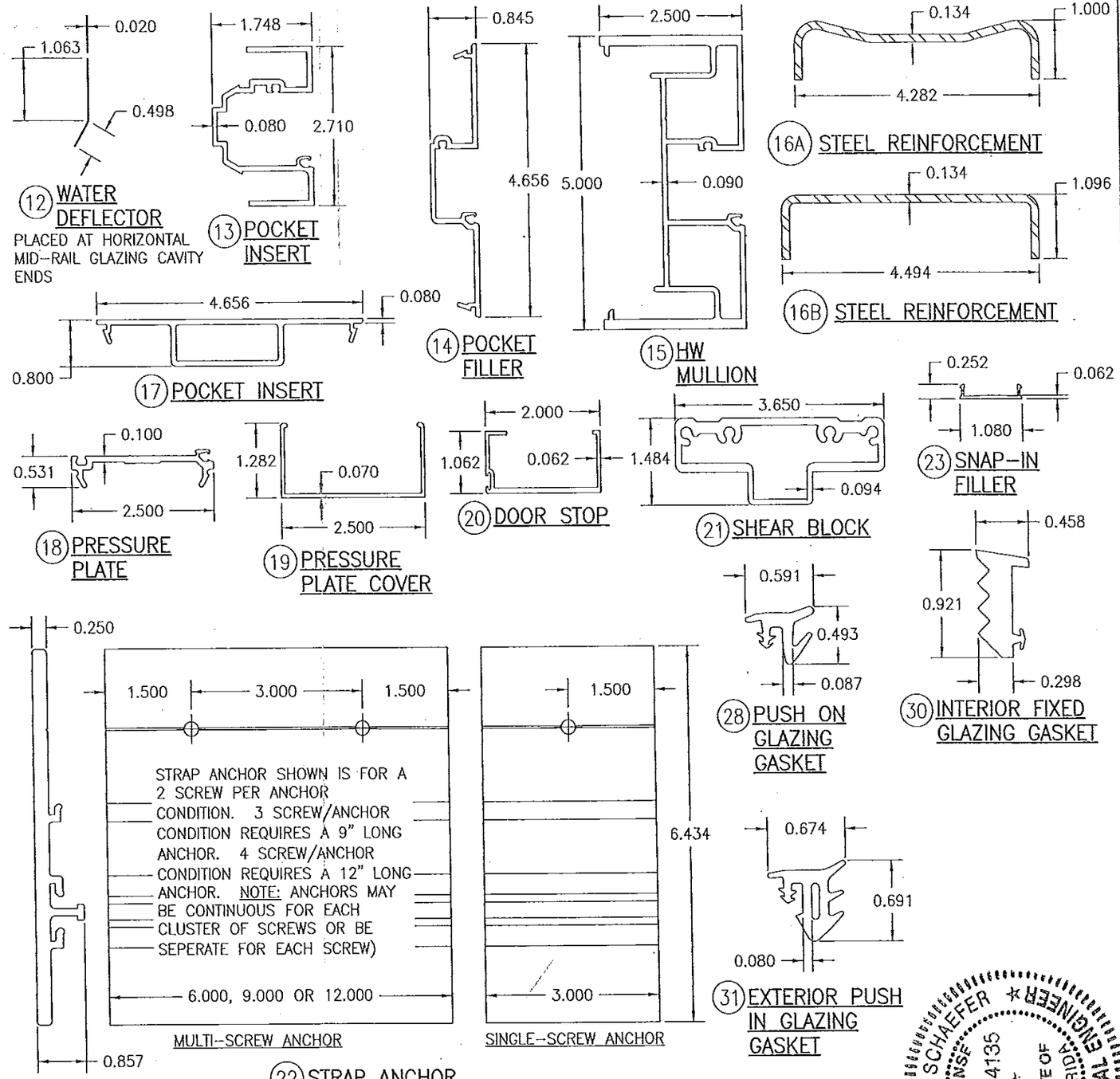

PRODUCT REVISED
as complying with the Florida Building Code
Acceptance No 14-0430.28
Expiration Date 04/15/2019
By
Miami Dade Product Control

PRODUCT RENEWED
as complying with the Florida Building Code
Acceptance No 13-0530.16
Expiration Date 04/15/2019
By
Miami Dade Product Control

WARREN W. SCHAEFER
LICENSE No. 44135
STATE OF FLORIDA
PROFESSIONAL ENGINEER

DRAWN BY: W.R.M.	CHECKED BY: W.W.S.
PLOT: 1=2	DATE: 01/27/09

NO.	REVISION DESCRIPTION	BY	DATE

DRAWING TITLE
IR500 ALUMINUM STORE FRONT SYSTEM – LARGE MISSILE IMPACT

MANUFACTURER
KAWNEER COMPANY, INC.
555 GUTHRIDGE COURT
NORCROSS, GA 30092
770–449–5555

CONSULTANTS
W. W. SCHAEFER ENGINEERING & CONSULTING, P.A. (CA 6809)
7480 150TH COURT NORTH
PALM BEACH GARDENS, FL 33418
PHONE: 561–744–3424

CERTIFICATION
FEB 25 2013
WARREN W. SCHAEFER, P.E.
P.E. NO. 44135

DRAWING NO. 1633
REV. B
SHEET NO. 10 OF 10