MIAMI-DADE COUNTY

DEPARTMENT OF REGULATORY AND ECONOMIC RESOURCES (RER)
BOARD AND CODE ADMINISTRATION DIVISION

MIAMI-DADE COUNTY
PRODUCT CONTROL SECTION
11805 SW 26 Street, Room 208
Miami, Florida 33175-2474
T (786) 315-2590 F (786) 315-2599
www.miamidade.gov/economy

NOTICE OF ACCEPTANCE (NOA)

PGT Industries, Inc.
1070 Technology Drive
North Venice, FL 34275

SCOPE:

This NOA is being issued under the applicable rules and regulations governing the use of construction materials. The documentation submitted has been reviewed and accepted by Miami-Dade County RER -Product Control Section to be used in Miami Dade County and other areas where allowed by the Authority Having Jurisdiction (AHJ).

This NOA shall not be valid after the expiration date stated below. The Miami-Dade County Product Control Section (In Miami Dade County) and/or the AHJ (in areas other than Miami Dade County) reserve the right to have this product or material tested for quality assurance purposes. If this product or material fails to perform in the accepted manner, the manufacturer will incur the expense of such testing and the AHJ may immediately revoke, modify, or suspend the use of such product or material within their jurisdiction. RER reserves the right to revoke this acceptance, if it is determined by Miami-Dade County Product Control Section that this product or material fails to meet the requirements of the applicable building code.

This product is approved as described herein, and has been designed to comply with the Florida Building Code, including the High Velocity Hurricane Zone.

DESCRIPTION: Series **"SGD–780"** Aluminum Sliding Glass Door w/90° corner (Reinf / Non-Reinf)– **L.M.I.**

APPROVAL DOCUMENT: Drawing No. **8100–11 Rev B**, titled "Alum. Sliding Glass Door, Impact", sheets 1 through 23 of 23, dated 05/01/2015 and last revised on 05/29/15, prepared by PGT Industries, signed and sealed by Anthony Lynn Miller, P. E., bearing the Miami–Dade County Product Control Revision stamp with the Notice of Acceptance number and Expiration date by the Miami–Dade County Product Control Section.

MISSILE IMPACT RATING: Large and Small Missile Impact Resistant

Limitations:

1. Max eight **(8)** Panels configuration is allowed per tables **1** thru **5**. The inside/outside corner units are limited to **(4)** panels each side (total 8-panels) per tables **1** thru **5**.
2. See sheets 4, 5, 6, 7 & 8 for Design Pressure (DP), glass type, sill type for positive DP limit, applicable reinforcement and anchorage requirements. See sheet 11 for anchor clusters at tracks and corner. See Pocket anchor details in sheet 13.
3. Pockets are under separate approval. Pocket & Egress applicable requirement to be reviewed by Building official.

LABELING: Each unit shall bear a permanent label with the manufacturer's name or logo, city, state and series and following statement: "Miami-Dade County Product Control Approved", noted herein.

RENEWAL of this NOA shall be considered after a renewal application has been filed and there has been no change in the applicable building code negatively affecting the performance of this product.

TERMINATION of this NOA will occur after the expiration date or if there has been a revision or change in the materials, use, and/or manufacture of the product or process. Misuse of this NOA as an endorsement of any product, for sales, advertising or any other purposes shall automatically terminate this NOA. Failure to comply with any section of this NOA shall be cause for termination and removal of NOA.

ADVERTISEMENT: The NOA number preceded by the words Miami-Dade County, Florida, and followed by the expiration date may be displayed in advertising literature. If any portion of the NOA is displayed, then it shall be done in its entirety.

INSPECTION: A copy of this entire NOA shall be provided to the user by the manufacturer or its distributors and shall be available for inspection at the job site at the request of the Building Official.

This NOA **revises NOA # 12-0516.04** and consists of this page 1 and evidence pages E-1, as well as approval document mentioned above.

The submitted documentation was reviewed by **Ishaq I. Chanda, P.E.**

MIAMI-DADE COUNTY APPROVED

7/13/15

NOTICE OF ACCEPTANCE: EVIDENCE SUBMITTED

A. DRAWINGS

1. Manufacturer's die drawings and sections (Submitted under files # listed below)
2. Drawing No. **8100–11 Rev B**, titled "Alum. Sliding Glass Door, Impact", sheets 1 through 23 of 23, dated 05/01/2015 and last revised on 05/29/15, prepared by PGT Industries, signed and sealed by Anthony Lynn Miller, P.E.

B. TESTS (Submitted under files # **12-0516.04/#11-1018.12**)

1. Test reports on: 1) Air Infiltration Test, per FBC, TAS 202-94
   2) Uniform Static Air Pressure Test, Loading per FBC TAS 202-94
   3) Water Resistance Test, per FBC, TAS 202-94
   4) Large Missile Impact Test per FBC, TAS 201-94
   5) Cyclic Wind Pressure Loading per FBC, TAS 203-94
   6) Forced Entry Test, per FBC 2411 3.2.1, TAS 202-94

Along with marked–up drawings and installation diagram of Aluminum SGD, prepared by Architectural Testing, Inc., Test Report No. **ATI–8124.01–401–18**, dated 11/13/2008, signed and sealed by Joseph A. Reed, P.E.

Along with marked–up drawings and installation diagram of Aluminum SGD, prepared by Fenestration Testing Laboratory, Inc., Test Reports No(s) **FTL–5618**, dated 06/21/2008, **FTL–5619,** dated 07/07/2008, **FTL–5254**, dated 05/17/2007 and **FTL–5273,** dated 05/07/2007 respectively, all signed and sealed by Carlos S. Rionda, P. E.

C. CALCULATIONS

1. Anchor verification calculations and structural analysis dated 05/29/15, complying with FBC-214 (5th Edition), prepared by PGT, signed and sealed by Lynn Miller, P.E.
2. Glazing complies w/ ASTME-1300-02. 04 & -09.

D. QUALITY ASSURANCE

1. Miami Dade Department of Regulatory and Economic Resources (RER).

E. MATERIAL CERTIFICATIONS

1. Notice of Acceptance No. **11-0624.02** issued to E.I. DuPont DeNemours & Co., Inc. for their "**DuPont Sentry Glass ® interlayer**", expiring on 01/14/17.
2. Notice of Acceptance No. **11–0624.01** issued to E.I. DuPont DeNemours & Co., Inc. for their "**DuPont Butacite® PVB Interlayer**", expiring on 12/11/2016.
3. Notice of Acceptance No. **11–0325.05** issued to Solutia Inc. for their "**Saflex and Vanceva clear and color interlayers w/ PETcore**", expiring on 05/21/16.

F. STATEMENTS

1. Statement letter of conformance to FBC 2014(5th edition) and letter of no financial interest, prepared by PGT, dated 05/29/15, signed and sealed by Lynn Miller, P.E.
2. Lab compliance as part of the above referenced test report.

G. OTHER

1. This NOA **revises** NOA # **12-0516.04**, expiring 08/02/17.
2. Test proposal # **07-2583**, dated 03/19/07 approved by BCCO.

Ishaq I. Chanda

Ishaq I. Chanda, P.E.
Product Control Examiner
NOA No. 15-0609.12
Expiration Date: August 02, 2017
Approval Date: July 23, 2015

GENERAL NOTES: IMPACT SLIDING GLASS DOOR

1. GLAZING TYPE OPTIONS: (GLASS RECIPES ARE FROM EXTERIOR TO INTERIOR)
   GLASS STRENGTHS - T = TEMPERED HS = HEAT STRENGTHED A = ANNEALED
   INTERLAYER TYPES - SGP = .090 DUPONT SENTRY GLAS PLUS SVS = .075 SOLUTIA VANCEVA STORM DBPVB = .090 DUPONT BUTACITE PVB SSPVB = .090 SOLUTIA SAFLEX PVB
   1,3 - 7/16" LAMI: (1) LITE OF 3/16" A GLASS AND (1) LITE OF 3/16" HS GLASS W/ AN .090 SGP OR .075 SVS INTERLAYER.
   2,4 - 7/16" LAMI: (2) LITES OF 3/16" HS GLASS WITH AN .090 SGP OR .075 SVS INTERLAYER.
   5,6 - 7/16" LAMI: (1) LITE OF 3/16" A GLASS AND (1) LITE OF 3/16" HS GLASS W/ AN .090 DBPVB OR SSPVB INTERLAYER.
   7,9 - 9/16" LAMI: (1) LITE OF 1/4" A GLASS AND (1) LITE OF 1/4" HS GLASS W/ AN .090 SGP OR .075 SVS INTERLAYER.
   8,10 - 9/16" LAMI: (2) LITES OF 1/4" HS GLASS W/ AN .090 SGP OR .075 SVS INTERLAYER.
   11,12 - 9/16" LAMI: (1) LITE OF 1/4" A GLASS AND (1) LITE OF 1/4" HS GLASS W/ AN .090 DBPVB OR SSPVB INTERLAYER.
   13,15 - 1 1/16" LAMI I.G. 3/16" T EXT. CAP + 3/8" AIR SPACE + 7/16" LAMI: (1) LITE OF 3/16" A GLASS AND (1) LITE OF 3/16" HS GLASS W/ AN .090 SGP OR .075 SVS INTERLAYER.
   14,16 - 1 1/16" LAMI I.G. 3/16" T EXT. CAP + 3/8" AIR SPACE + 7/16" LAMI: (2) LITES OF 3/16" HS GLASS W/ AN .090 SGP OR .075 SVS INTERLAYER.
   17,18 - 1 1/16" LAMI I.G. 3/16" T EXT. CAP + 3/8" AIR SPACE + 7/16" LAMI: (1) LITE OF 3/16" A GLASS AND (1) LITE OF 3/16" HS GLASS W/ AN .090 DBPVB OR SSPVB INTERLAYER.
   19,21 - 1 1/16" LAMI I.G. 3/16" T EXT. CAP + 5/16" AIR SPACE + 9/16" LAMI: (1) LITE OF 1/4" A GLASS AND (1) LITE OF 1/4" HS GLASS W/ AN .090 SGP OR .075 SVS INTERLAYER.
   20,22 - 1 1/16" LAMI I.G. 3/16" T EXT. CAP + 5/16" AIR SPACE + 9/16" LAMI: (2) LITES OF 1/4" HS GLASS W/ AN .090 SGP OR .075 SVS INTERLAYER.
   23,24 - 1 1/16" LAMI I.G. 3/16" T EXT. CAP + 5/16" AIR SPACE + 9/16" LAMI: (1) LITE OF 1/4" A GLASS AND (1) LITE OF 1/4" HS GLASS W/ AN .090 DBPVB OR SSPVB INTERLAYER.
   25,27 - 1 1/16" LAMI I.G. 1/4" T EXT. CAP + 5/16" AIR SPACE + 7/16" LAMI: (1) LITE OF 3/16" A GLASS AND (1) LITE OF 3/16" HS GLASS W/ AN .090 SGP OR .075 SVS INTERLAYER.
   26,28 - 1 1/16" LAMI I.G. 1/4" T EXT. CAP + 5/16" AIR SPACE + 7/16" LAMI: (2) LITES OF 3/16" HS GLASS W/ AN .090 SGP OR .075 SVS INTERLAYER.
   29,30 - 1 1/16" LAMI I.G. 1/4" T EXT. CAP + 5/16" AIR SPACE + 7/16" LAMI: (1) LITE OF 3/16" A GLASS AND (1) LITE OF 3/16" HS GLASS W/ AN .090 DBPVB OR SSPVB INTERLAYER.
   31,33 - 1 1/16" LAMI I.G. 1/4" T EXT. CAP + 1/4" AIR SPACE + 9/16" LAMI: (1) LITE OF 1/4" A GLASS AND (1) LITE OF 1/4" HS GLASS W/ AN .090 SGP OR .075 SVS INTERLAYER.
   32,34 - 1 1/16" LAMI I.G. 1/4" T EXT. CAP + 1/4" AIR SPACE + 9/16" LAMI: (2) LITES OF 1/4" HS GLASS W/ AN .090 SGP OR .075 SVS INTERLAYER.
   35,36 - 1 1/16" LAMI I.G. 1/4" T EXT. CAP + 1/4" AIR SPACE + 9/16" LAMI: (1) LITE OF 1/4" A GLASS AND (1) LITE OF 1/4" HS GLASS W/ AN .090 DBPVB OR SSPVB INTERLAYER.
2. DESIGN PRESSURES: A. NEGATIVE DESIGN LOADS BASED ON TESTED PRESSURE AND GLASS TABLES ASTM E 1300.
   B. POSITIVE DESIGN LOADS BASED ON WATER TEST PRESSURE AND GLASS TABLES ASTM E 1300.
3. ANCHORAGE: THE 33 1/3% STRESS INCREASE HAS NOT BEEN USED IN THE DESIGN OF THIS PRODUCT. MATERIALS, INCLUDING BUT NOT LIMITED TO STEEL SCREWS, THAT COME INTO CONTACT WITH OTHER DISSIMILAR MATERIALS SHALL MEET THE REQUIREMENTS OF THE FLORIDA BUILDING CODE. FOR ANCHORAGE DETAILS SEE SHEETS 4 THROUGH 13.
4. SHUTTERS ARE NOT REQUIRED.
5. INSTALLATION SCREWS, FRAME AND PANEL CORNERS SEALED WITH NARROW JOINT SEALANT.
6. REFERENCES: TEST REPORTS FTL-5254, FTL-5273, FTL-5618, FTL-5619, ATI-81241.01-401-18-R1 A
   ELCO TEXTRON NOA'S, ANSI/AF&PA FOR WOOD CONSTRUCTION AND ADM, ALUMINUM DESIGN MANUAL
7. THIS PRODUCT HAS BEEN DESIGNED & TESTED TO COMPLY WITH THE REQUIREMENTS OF THE FLORIDA BUILDING CODE, INCLUDING THE HIGH VELOCITY HURRICANE ZONE (HVHZ).
8. DOOR SIZES MUST BE VERIFIED FOR COMPLIANCE WITH EGRESS REQUIREMENTS PER FLORIDA BUILDING CODE, AS APPLICABLE. A
9. CONFIGURATIONS: STRAIGHT DOORS - MAXIMUM 4 TRACKS BY 10 FT. (120") HIGH WITH A MAXIMUM OF EIGHT 5 FT. NOMINAL WIDE DOOR PANELS.
   A INSIDE OR OUTSIDE CORNER DOORS - MAXIMUM OF 4 TRACKS BY 10 FT. (120") HIGH WITH A MAXIMUM OF FOUR 5 FT. PANELS EACH SIDE OF CORNER.
   SEE EXAMPLE ELEVATIONS, SHT. 13 AND PANEL CONFIGURATIONS SHT. 14.

NOA DRAWING MAP

	SHEET
GENERAL NOTES	1
GLAZING DETAILS	2-3
ANCHORAGE	4-13
DESIGN PRESSURES	4-9
ELEVATIONS	14
CONFIGURATIONS	14-15
VERT. SECTIONS	16-17
HORIZ. SECTIONS	18-20
PARTS LIST	21
EXTRUSIONS	22-23

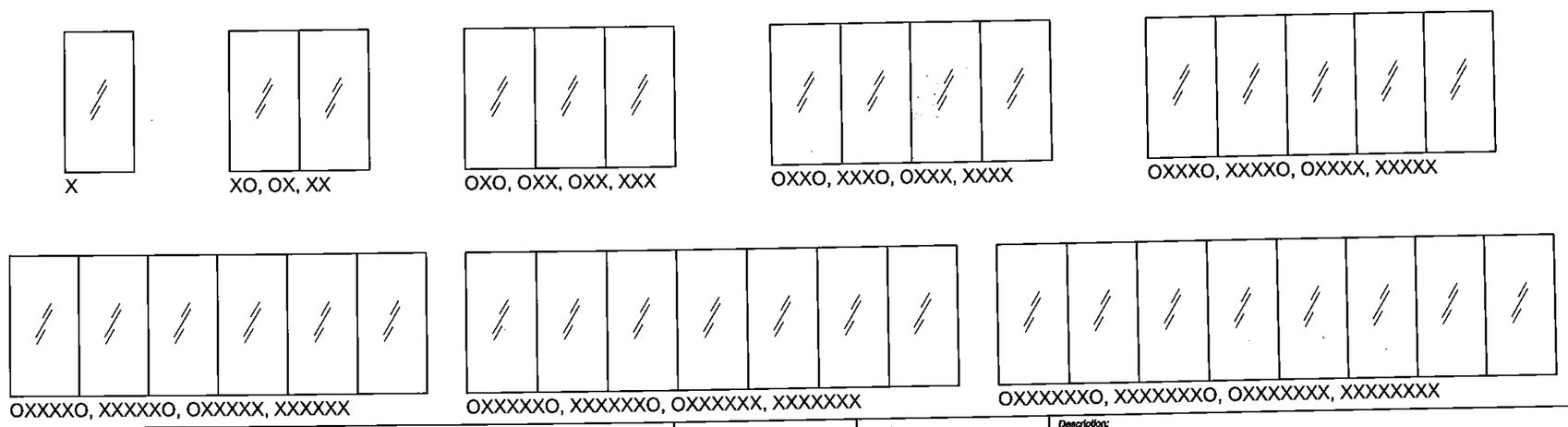

PRODUCT REVISED
in complying with the Florida Building Code
Acceptance No. 15-0609.12
Expiration Date AUG 03 2017
By [signature]
Miami Dade Product Control

ANTHONY LYNN MILLER
LICENSE
No. 58705
STATE OF FLORIDA
PROFESSIONAL ENGINEER

A. LYNN MILLER, P.E.
P.E.# 58705

Revsd By:	Date:	Revisions:	
J.R.	05/27/15	C	FBC 2014 CODE CHANGE, REM STD YEARS AND NOA #'S
J.J.	10/13/11	B	FBC 2010 CODE CHANGE
F.K.	11/8/07	A	REVISE NOTE 1, ADD GLAZING OPTIONS. REVISE NOTE 2 ADD CONFIG. AND CORNER DOORS. REVISE NOTE 7 AND 9. ADD EXAMPLE CONFIGURATIONS.
Drawn By: F.K.	Date: 5/1/07	Checked By: J.J.	Date: XX/XX/07

1070 TECHNOLOGY DRIVE
NOKOMIS, FL 34275
P.O. BOX 1529
NOKOMIS, FL 34274

PGT Visibly Better

Description: GENERAL NOTES AND MAP
Title: ALUM. SLIDING GLASS DOOR, IMPACT

Series/Model:	Scale:	Sheet:	Drawing No.	Rev:
SGD780	NTS	1 of 23	8100-11	C

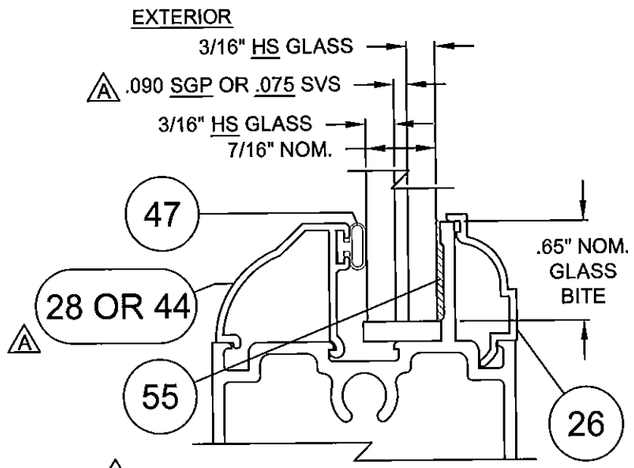

A 7/16" LAMI GLASS TYPES 2 & 4

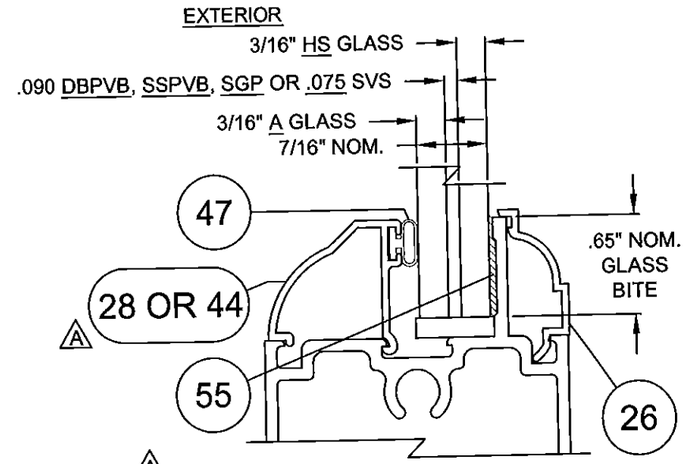

A 7/16" LAMI GLASS TYPES 1, 3, 5 & 6

A GLAZING TYPE OPTIONS KEYS: (GLASS RECIPES ARE FROM EXTERIOR TO INTERIOR)
GLASS STRENGTHS - T = TEMPERED HS = HEAT STRENGTHED A = ANNEALED
INTERLAYER TYPES - SGP = .090 DUPONT SENTRY GLAS PLUS SVS = .075 SOLUTIA VANCEVA STORM
DBPVB = .090 DUPONT BUTACITE PVB SSPVB = .090 SOLUTIA SAFLEX PVB

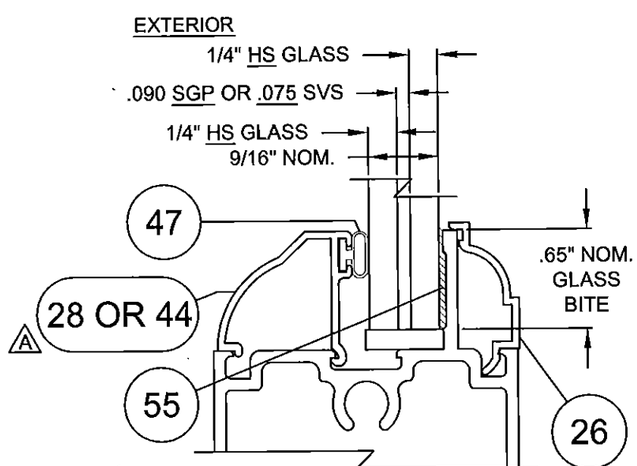

A 9/16" LAMI GLASS TYPES 8 & 10

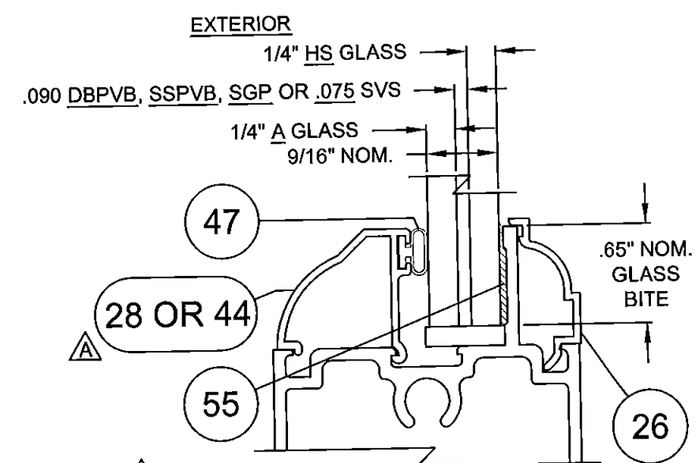

A 9/16" LAMI GLASS TYPES 7, 9, 11 & 12

PRODUCT REVISED
as complying with the Florida
Building Code
Acceptance No. 15-0609.12
Expiration Date 8/2/17
By [signature]
Miami Dade Product Control

ANTHONY LYNN MILLER
LICENSE
No. 58705
STATE OF FLORIDA
PROFESSIONAL ENGINEER
5/29/15

A. LYNN MILLER, P.E.
P.E.# 58705

Revsd By:	Date:	Revisions:	
J.R.	05/27/15	C	NO CHANGE THIS SHEET
J.J.	10/13/11	B	NO CHANGE THIS SHEET
F.K.	11/8/07	A	ADD 7/16" PVB AND 9/16' LAMI GLAZING DETAILS. EXPAND DETAILS TO COVER ALL INTERLAYER CROSS QUALIFICATIONS.
Drawn By: F.K.	Date: 5/1/07	Checked By: J.J.	Date: XX/XX/07

1070 TECHNOLOGY DRIVE
NOKOMIS, FL 34275

P.O. BOX 1529
NOKOMIS, FL 34274

PGT
Visibly Better

Description: LAMI GLAZING DETAILS

Title: ALUM. SLIDING GLASS DOOR, IMPACT

Series/Model:	Scale:	Sheet:	Drawing No.	Rev:
SGD780	1x	2 of 23	8100-11	C

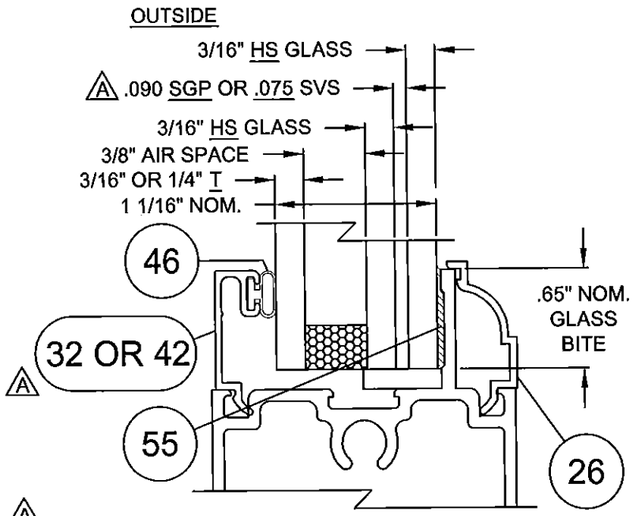

A 1 1/16" LAMI I.G. TYPES 14, 16, 26 & 28

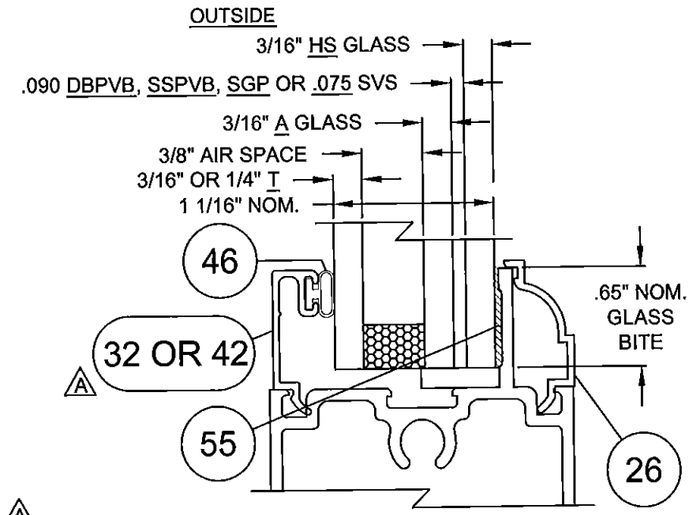

A 1 1/16" LAMI I.G. TYPES 13, 15, 17, 18, 25, 27, 29 & 30

A GLAZING TYPE OPTIONS KEYS: (GLASS RECIPES ARE FROM EXTERIOR TO INTERIOR)
GLASS STRENGTHS - T = TEMPERED HS = HEAT STRENGTHED A = ANNEALED
INTERLAYER TYPES - SGP = .090 DUPONT SENTRY GLAS PLUS SVS = .075 SOLUTIA VANCEVA STORM
DBPVB = .090 DUPONT BUTACITE PVB SSPVB = .090 SOLUTIA SAFLEX PVB

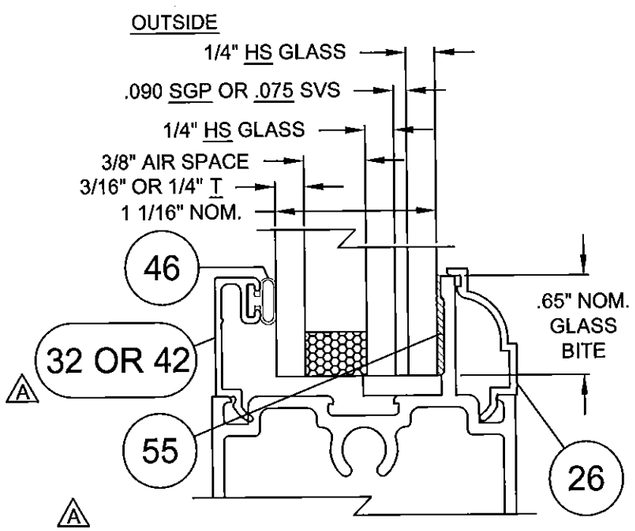

A 1 1/16" LAMI I.G. TYPES 20 & 22

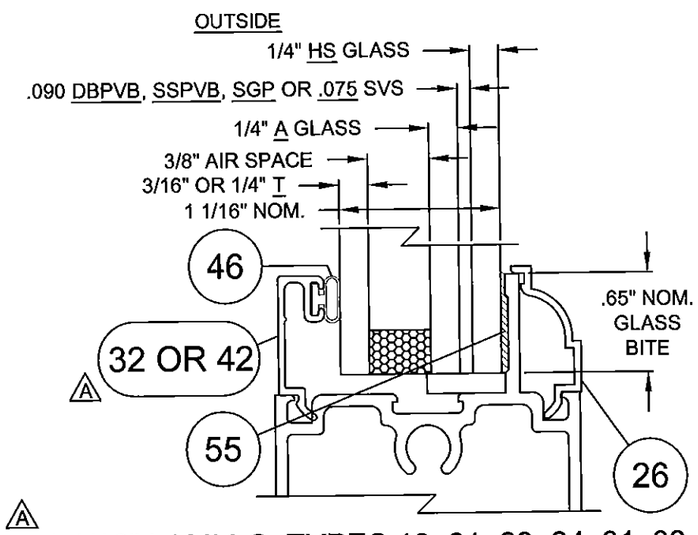

A 1 1/16" LAMI I.G. TYPES 19, 21, 23, 24, 31, 33, 35 & 36

PRODUCT REVIEWED
as complying with the Florida Building Code
Acceptance No. 15-0609.12
Expiration Date 8/24/17
By [illegible]
Miami Dade Product Control

ANTHONY LYNN MILLER
LICENSE
No. 58705
5/29/15
STATE OF FLORIDA
PROFESSIONAL ENGINEER

A. LYNN MILLER, P.E.
P.E.# 58705

Revsd By:	Date:	Revisions:	
J.R.	05/27/15	C	NO CHANGE THIS SHEET
J.J.	10/13/11	B	NO CHANGE THIS SHEET
F.K.	11/8/07	A	ADD 1 1/16"LAMI I.G. W/ 7/16" PVB AND 9/16" LAMI GLAZING DETAILS. EXPAND DETAILS TO COVER ALL INTERLAYER CROSS QUALIFICATIONS.
Drawn By: F.K.	Date: 5/1/07	Checked By: J.J.	Date: XX/XX/07

1070 TECHNOLOGY DRIVE
NOKOMIS, FL 34275

P.O. BOX 1529
NOKOMIS, FL 34274

PGT
Visibly Better

Description: LAMI I.G. GLAZING DETAILS

Title: ALUM. SLIDING GLASS DOOR, IMPACT

Series/Model:	Scale:	Sheet:	Drawing No.	Rev:
SGD780	1x	3 of 23	8100-11	C

DESIGN PRESSURE AND ANCHORAGE - NO REINFORCEMENT - 4 1/2" OR 5 1/4" SILL (SEE NOTES BELOW FOR OTHER SILLS)

TABLE 1.

Lami 7/16 Ann/Heat w/ SGP or SVS Interlayer
GLASS TYPES: 1, 3

>HEAD & SILL (H&S) INTERLOCK & STRAIGHT & CORNER ASTRAGAL CLUSTER PLUS ANCHOR QTY. PER PANEL
>JAMB ANCHOR QTY. >P-HOOK ANCHOR QTY. (SEE DETAIL SHT. 13)

		DOOR HEIGHT																							
		80" (68)			84" (70)			90" (76)			96" (80)			102" (86)			108" (90)			114" (96)			120" (100)		
NOM. PANEL WIDTH	FRAME SIDE	1, CONC	2, CONC	2,3, WOOD	1, CONC	2, CONC	2,3, WOOD	1, CONC	2, CONC	2,3, WOOD	1, CONC	2, CONC	2,3, WOOD	1, CONC	2, CONC	2,3, WOOD	1, CONC	2, CONC	2,3, WOOD	1, CONC	2, CONC	2,3, WOOD	1, CONC	2, CONC	2,3, WOOD
DESIGN PRESS.		+80/-80			+80/-80			+80/-80			+80/-80			+60/-70			+60/-70			+60/-70			+60/-70		
24" (20)	H&S	C4+1	C4+1	C4+1	C4+1	C4+1	C4+1	C4+1	C4+1	C4+1	C4+1	C4+1	C4+1	C4+1	C4+1	C4+1	C4+1	C4+1	C4+1	C4+1	C4+1	C4+1	C4+1	C4+1	C4+1
	JAMB	8	8	8	8	8	8	9	9	9	9	9	9	10	10	10	10	10	10	11	11	11	11	11	11
	P-HOOK	4	4	4	4	4	4	5	5	5	5	5	5	5	5	5	5	5	5	6	6	6	6	6	6
DESIGN PRESS.		+80/-80			+80/-80			+80/-80			+80/-80			+60/-70			+60/-70			+60/-70			+60/-70		
30" (26)	H&S	C4+1	C4+1	C4+1	C4+1	C4+1	C4+1	C4+1	C4+1	C4+1	C4+1	C4+1	C4+1	C4+1	C4+1	C4+1	C4+1	C4+1	C4+1	C4+1	C4+1	C4+1	C4+1	C4+1	C4+1
	JAMB	8	8	8	8	8	8	9	9	9	9	9	9	10	10	10	10	10	10	11	11	11	11	11	11
	P-HOOK	4	4	4	4	4	4	5	5	5	5	5	5	5	5	5	5	5	5	6	6	6	6	6	6
DESIGN PRESS.		+80/-80			+80/-80			+80/-80			+80/-80			+60/-70			+60/-70			+60/-70			+60/-70		
36" (30)	H&S	C4+1	C4+1	C4+1	C4+1	C4+1	C4+1	C4+1	C4+1	C4+1	C4+1	C4+1	C4+1	C4+1	C4+1	C4+1	C4+1	C4+1	C4+1	C4+1	C4+1	C5+1	C4+1	C4+1	C5+1
	JAMB	8	8	8	9	9	8	9	9	9	10	10	9	10	10	10	10	10	10	11	11	11	11	11	11
	P-HOOK	4	4	5	4	4	5	5	5	5	5	5	5	5	5	5	5	5	5	6	6	6	6	6	6
DESIGN PRESS.		+80/-80			+80/-80			+80/-80			+80/-80			+60/-70			+60/-70			+60/-70			+60/-69.7		
42" (36)	H&S	C4+1	C4+1	C4+2	C4+1	C4+1	C4+2	C4+1	C4+1	C4+2	C4+1	C4+1	C4+2	C4+1	C4+1	C4+2	C4+1	C4+1	C4+2	C4+1	C4+1	C4+2	C4+1	C4+1	C5+2
	JAMB	9	9	8	10	10	8	10	10	9	11	11	9	11	11	10	11	11	10	12	12	11	12	12	11
	P-HOOK	4	4	5	4	4	5	5	5	6	5	5	6	5	5	6	5	5	6	6	6	6	6	6	7
DESIGN PRESS.		+80/-80			+80/-80			+77/-77			+72.3/-72.3			+60/-67.3			+60/-62.3			+59/-59			+57.1/-57.1		
48" (40)	H&S	C4+1	C4+1	C4+2	C4+1	C4+1	C4+2	C4+1	C4+1	C4+2	C4+1	C4+1	C4+2	C4+1	C4+1	C4+2	C4+1	C4+1	C4+2	C4+1	C4+1	C4+2	C4+1	C4+1	C4+2
	JAMB	10	10	8	11	11	8	11	11	9	11	11	9	11	11	10	11	11	10	11	11	11	12	12	11
	P-HOOK	4	4	6	4	4	6	5	5	6	5	5	6	5	5	6	5	5	6	6	6	6	6	6	6
DESIGN PRESS.		+80/-80			+77.3/-77.3			+71.8/-71.8			+66.5/-66.5														
54" (46)	H&S	C4+2	C4+2	C4+3	C4+1	C4+1	C5+2	C4+1	C4+1	C5+2	C4+1	C4+1	C5+2												
	JAMB	11	11	9	12	12	9	12	12	9	12	12	9												
	P-HOOK	4	4	6	4	4	6	5	5	6	5	5	6												
DESIGN PRESS.		+75.2/-75.2			+71.8/-71.8			+67/-67			+61.8/-61.8														
60" (50)	H&S	C4+2	C4+2	C4+3	C4+2	C4+2	C4+3	C4+2	C4+2	C4+3	C4+1	C4+1	C5+2												
	JAMB	12	12	9	12	12	9	12	12	9	12	12	9												
	P-HOOK	4	4	6	4	4	6	5	5	6	5	5	6												

PANELS OVER 48" WIDE NOT AVAILABLE OVER 96" HIGH

TABLE 1A.
SILL HT. VS POS. DP

SILL HEIGHT	POS. DESIGN PRESSURE
1 5/8"	N/A
2 3/4"	+50.0 PSF
3 1/2"	+73.3 PSF
4 1/2"	+80.0 PSF
5 1/4"	+80.0 PSF
SEE NOTES 1-3	

PRODUCT REVIEWED
as complying with the Florida
Building Code
Acceptance No. 15-0609.12
Expiration Date 8/2/17
By [signature]
Miami Dade Product Control

1. POSITIVE PRESSURES IN TABLE ARE BASED ON THE USE OF THE 4 1/2" OR 5 1/4" SILL.
2. WHEN USING THE 2 3/4" SILL, POSITIVE DP IS 50 PSF MAX. AND WITH THE 3 1/2" SILL, POSITIVE PRESSURES IS 73.3 PSF MAX. (NEGATIVE PRESSURES UNCHANGED). SEE TABLE 2A.
3. 2 3/4", 3 1/2", 4 1/2" AND 5 1/4" SILL HEIGHTS ARE TESTED FOR WATER INFILTRATION WHEREAS THE 1 5/8" SILL IS NOT AND MUST ONLY BE USED WHERE WATER RESISTANCE IS NOT REQUIRED. POSITIVE DESIGN PRESSURES SHOWN IN TABLE 1 MAY BE USED WHEN THE DOOR IS PROTECTED BY AN OVERHANG COMPLYING WITH THE FLORIDA BUILDING CODE (SEE ADJACENT DIAGRAM); THIS CONDITION IS NOT RATED FOR WATER INFILTRATION.
4. ANCHOR TYPES: 1. 1/4" ELCO ULTRACON (FORMERLY TAPCON) 2. 1/4" ELCO SS4 CRETE-FLEX 3. #12 STEEL SCREW (G5)
5. SEE SHEETS 10 THROUGH 13 FOR ANCHORAGE SPACING AND EMBEDMENT INFORMATION.
6. GLASS TYPE KEYS: (SEE NOTE 1, SHEET 1 FOR COMPLETE DESCRIPTIONS)
   1,3 - 7/16" LAMI (AN-HS W/ SGP OR SVS)

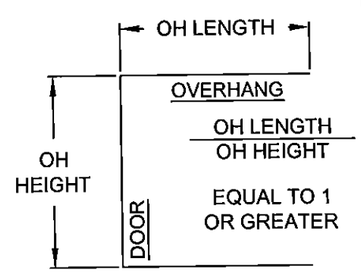

SEE NOTE 3 (A)

ANTHONY LYNN MILLER
LICENSE
No. 58705
5/29/15
STATE OF FLORIDA
PROFESSIONAL ENGINEER
A. LYNN MILLER, P.E.
P.E.# 58705

Revised By:	Date:	Revisions:	
J.R.	05/27/15	C	FBC 2014 UPDATE, REV QUANT. FOR ANCHOR 2, CONC
J.J.	10/13/11	B	NO CHANGE THIS SHEET
F.K.	11/8/07	A	REVISE DP TABLE AND ADD ANCHORAGE. ADD NOTES RE: SILL & POS. DP, GLASS TYPES AND ANCHOR TYPES
Drawn By: F.K.	Date: 5/1/07	Checked By:	Date:

1070 TECHNOLOGY DRIVE
NOKOMIS, FL 34275
P.O. BOX 1529
NOKOMIS, FL 34274

PGT Visibly Better

Description: DP AND ANCHORAGE, LAMI TABLE 1
Title: ALUM. SLIDING GLASS DOOR, IMPACT

Series/Model:	Scale:	Sheet:	Drawing No.	Rev:
SGD780	NTS	4 of 23	8100-11	C

DESIGN PRESSURE AND ANCHORAGE - NO REINFORCEMENT - 4 1/2" OR 5 1/4" SILL (SEE NOTES BELOW FOR OTHER SILLS)

TABLE 2.

Laml 9/16 Ann/Heat w/ SGP or SVS Interlayer
GLASS TYPES: 7, 9

>HEAD & SILL (H&S) INTERLOCK & STRAIGHT & CORNER ASTRAGAL CLUSTER PLUS ANCHOR QTY. PER PANEL
>JAMB ANCHOR QTY. >P-HOOK ANCHOR QTY. (SEE DETAIL SHT. 13)

		DOOR HEIGHT																							
		80" (68)			84" (70)			90" (76)			96" (80)			102" (86)			108" (90)			114" (96)			120" (100)		
NOM. PANEL WIDTH	FRAME SIDE	1, CONC	2, CONC	2,3, WOOD	1, CONC	2, CONC	2,3, WOOD	1, CONC	2, CONC	2,3, WOOD	1, CONC	2, CONC	2,3, WOOD	1, CONC	2, CONC	2,3, WOOD	1, CONC	2, CONC	2,3, WOOD	1, CONC	2, CONC	2,3, WOOD	1, CONC	2, CONC	2,3, WOOD
DESIGN PRESS.		+80/-80			+80/-80			+80/-80			+80/-80			+60/-70			+60/-70			+60/-70			+60/-70		
24" (20)	H&S	C4+1	C4+1	C4+1	C4+1	C4+1	C4+1	C4+1	C4+1	C4+1	C4+1	C4+1	C4+1	C4+1	C4+1	C4+1	C4+1	C4+1	C4+1	C4+1	C4+1	C4+1	C4+1	C4+1	C4+1
	JAMB	8	8	8	8	8	8	9	9	9	9	9	9	10	10	10	10	10	10	11	11	11	11	11	11
	P-HOOK	4	4	4	4	4	4	5	5	5	5	5	5	5	5	5	5	5	5	6	6	6	6	6	6
DESIGN PRESS.		+80/-80			+80/-80			+80/-80			+80/-80			+60/-70			+60/-70			+60/-70			+60/-70		
30" (26)	H&S	C4+1	C4+1	C4+1	C4+1	C4+1	C4+1	C4+1	C4+1	C4+1	C4+1	C4+1	C4+1	C4+1	C4+1	C4+1	C4+1	C4+1	C4+1	C4+1	C4+1	C4+1	C4+1	C4+1	C4+1
	JAMB	8	8	8	8	8	8	9	9	9	9	9	9	10	10	10	10	10	10	11	11	11	11	11	11
	P-HOOK	4	4	4	4	4	4	5	5	5	5	5	5	5	5	5	5	5	5	6	6	6	6	6	6
DESIGN PRESS.		+80/-80			+80/-80			+80/-80			+80/-80			+60/-70			+60/-70			+60/-70			+60/-70		
36" (30)	H&S	C4+1	C4+1	C4+1	C4+1	C4+1	C4+1	C4+1	C4+1	C4+1	C4+1	C4+1	C4+1	C4+1	C4+1	C4+1	C4+1	C4+1	C4+1	C4+1	C4+1	C5+1	C4+1	C4+1	C5+1
	JAMB	8	8	8	9	9	8	9	9	9	10	10	9	10	10	10	10	10	10	11	11	11	11	11	11
	P-HOOK	4	4	5	4	4	5	5	5	5	5	5	5	5	5	5	5	5	5	6	6	6	6	6	6
DESIGN PRESS.		+80/-80			+80/-80			+80/-80			+80/-80			+60/-70			+60/-70			+60/-70			+60/-70		
42" (36)	H&S	C4+1	C4+1	C4+2	C4+1	C4+1	C4+2	C4+1	C4+1	C4+2	C4+1	C4+1	C4+2	C4+1	C4+1	C4+2	C4+1	C4+1	C4+2	C4+1	C4+1	C4+2	C4+1	C4+1	C5+2
	JAMB	9	9	8	10	10	8	10	10	9	11	11	9	11	11	10	11	11	10	12	12	11	12	12	11
	P-HOOK	4	4	5	4	4	5	5	5	6	5	5	6	5	5	6	5	5	6	6	6	6	6	6	7
DESIGN PRESS.		+80/-80			+80/-80			+80/-80			+80/-80			+60/-70			+60/-70			+60/-70			+60/-70		
48" (40)	H&S	C4+1	C4+1	C4+2	C4+1	C4+1	C4+2	C4+1	C4+1	C5+2	C4+1	C4+1	C5+2	C4+1	C4+1	C5+2	C4+1	C4+1	C5+2	C4+1	C4+1	C5+2	C4+1	C4+1	C6+2
	JAMB	10	10	8	11	11	8	12	12	9	12	12	10	12	12	10	13	13	10	13	13	11	14	14	11
	P-HOOK	4	4	6	4	4	6	5	5	6	5	5	7	5	5	6	5	5	7	6	6	7	6	6	7
DESIGN PRESS.		+80/-80			+80/-80			+80/-80			+80/-80														
54" (46)	H&S	C4+2	C4+2	C4+3	C4+2	C4+2	C4+3	C4+2	C4+2	C4+3	C4+2	C4+2	C5+3												
	JAMB	11	11	9	12	12	9	13	13	10	14	14	11												
	P-HOOK	4	4	6	4	4	6	5	5	7	5	5	7												
DESIGN PRESS.		+80/-80			+80/-80			+78.1/-78.1			+73.9/-73.9														
60" (50)	H&S	C4+2	C4+2	C4+3	C4+2	C4+2	C5+3	C4+2	C4+2	C5+3	C4+2	C4+2	C5+3												
	JAMB	12	12	10	13	13	10	14	14	11	14	14	11												
	P-HOOK	4	4	7	4	4	7	5	5	7	5	5	7												

PANELS OVER 48" WIDE NOT AVAILABLE OVER 96" HIGH

TABLE 2A.
SILL HT. VS POS. DP

SILL HEIGHT	POS. DESIGN PRESSURE
1 5/8"	N/A
2 3/4"	+50.0 PSF
3 1/2"	+73.3 PSF
4 1/2"	+80.0 PSF
5 1/4"	+80.0 PSF
SEE NOTES 1-3	

PRODUCT REVISED
as complying with the Florida Building Code
Acceptance No. 15-0609.12
Expiration Date 8/12/17
By Ishwar L. Uhand
Miami Dade Product Control

1. POSITIVE PRESSURES IN TABLE ARE BASED ON THE USE OF THE 4 1/2" OR 5 1/4" SILL.
2. WHEN USING THE 2 3/4" SILL, POSITIVE DP IS 50 PSF MAX. AND WITH THE 3 1/2" SILL, POSITIVE PRESSURES IS 73.3 PSF MAX. (NEGATIVE PRESSURES UNCHANGED). SEE TABLE 1A.
3. 2 3/4", 3 1/2", 4 1/2" AND 5 1/4" SILL HEIGHTS ARE TESTED FOR WATER INFILTRATION WHEREAS THE 1 5/8" SILL IS NOT AND MUST ONLY BE USED WHERE WATER RESISTANCE IS NOT REQUIRED. POSITIVE DESIGN PRESSURES SHOWN IN TABLE 1 MAY BE USED WHEN THE DOOR IS PROTECTED BY AN OVERHANG COMPLYING WITH THE FLORIDA BUILDING CODE (SEE ADJACENT DIAGRAM); THIS CONDITION IS NOT RATED FOR WATER INFILTRATION.
4. ANCHOR TYPES: 1. 1/4" ELCO ULTRACON (FORMERLY TAPCON) 2. 1/4" ELCO SS4 CRETE-FLEX 3. #12 STEEL SCREW (G5)
5. SEE SHEETS 10 THROUGH 13 FOR ANCHORAGE SPACING AND EMBEDMENT INFORMATION.
6. GLASS TYPE KEYS: (SEE NOTE 1, SHEET 1 FOR COMPLETE DESCRIPTIONS)
   7,9 - 9/16" LAMI (A, HS W/ SGP OR SVS)

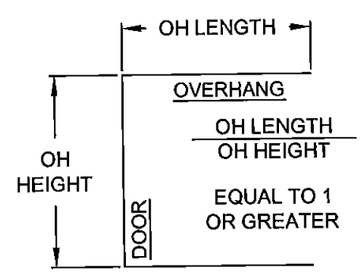

SEE NOTE 3

ANTHONY LYNN MILLER
LICENSE
No. 58705
5/29/15
STATE OF FLORIDA
PROFESSIONAL ENGINEER
A. LYNN MILLER, P.E.
P.E.# 58705

Revsd By:	Date:	Revisions:	
J.R.	05/27/15	C	FBC 2014 UPDATE, REV QUANT. FOR ANCHOR 2, CONC
J.J.	10/13/11	B	NO CHANGE THIS SHEET
F.K.	11/8/07	A	NEW DP AND ANCHORAGE TABLE
Drawn By: F.K.	Date: 5/1/07	Checked By:	Date:

1070 TECHNOLOGY DRIVE
NOKOMIS, FL 34275
P.O. BOX 1529
NOKOMIS, FL 34274

PGT Visibly Better

Description: DP AND ANCHORAGE, LAMI TABLE 2
Title: ALUM. SLIDING GLASS DOOR, IMPACT

Series/Model:	Scale:	Sheet:	Drawing No.	Rev:
SGD780	NTS	5 of 23	8100-11	C

DESIGN PRESSURE AND ANCHORAGE - FULL REINFORCEMENT - 5 1/4" SILL (SEE NOTES BELOW FOR OTHER SILLS)

TABLE 3.

Lami 7/16 or 9/16 Heat/Heat w/ SGP or SVS Interlayer

GLASS TYPES: 2, 4, 8, 10

>HEAD & SILL (H&S) INTERLOCK & STRAIGHT & CORNER ASTRAGAL CLUSTER PLUS ANCHOR QTY. PER PANEL

>JAMB ANCHOR QTY. >P-HOOK ANCHOR QTY. (SEE DETAIL SHT. 13)

		DOOR HEIGHT																							
		80" (68)			84" (70)			90" (76)			96" (80)			102" (86)			108" (90)			114" (96)			120" (100)		
NOM. PANEL WIDTH	FRAME SIDE	1, CONC	2, CONC	2,3, WOOD	1, CONC	2, CONC	2,3, WOOD	1, CONC	2, CONC	2,3, WOOD	1, CONC	2, CONC	2,3, WOOD	1, CONC	2, CONC	2,3, WOOD	1, CONC	2, CONC	2,3, WOOD	1, CONC	2, CONC	2,3, WOOD	1, CONC	2, CONC	2,3, WOOD
DESIGN PRESS.		+105/-115			+105/-115			+105/-115			+105/-115			+105/-115			+105/-115			+105/-115			+105/-115		
24" (20)	H&S	C4+1	C4+1	C4+1	C4+1	C4+1	C4+1	C4+1	C4+1	C4+1	C4+1	C4+1	C4+1	C4+1	C4+1	C4+1	C4+1	C4+1	C5+1	C4+1	C4+1	C5+1	C4+1	C4+1	C5+1
	JAMB	8	8	8	8	8	8	9	9	9	9	9	9	10	10	10	11	11	10	11	11	11	12	12	11
	P-HOOK	4	4	4	4	4	5	5	5	5	5	5	5	5	5	5	5	5	6	6	6	6	6	6	6
DESIGN PRESS.		+105/-115			+105/-115			+105/-115			+105/-115			+105/-115			+105/-115			+105/-115			+105/-115		
30" (26)	H&S	C4+1	C4+1	C4+1	C4+1	C4+1	C5+1	C4+1	C4+1	C5+1	C4+1	C4+1	C5+1	C4+1	C4+1	C6+1	C4+1	C4+1	C6+1	C4+1	C4+1	C6+1	C4+1	C4+1	C7+1
	JAMB	9	9	8	10	10	8	11	11	9	11	11	9	12	12	10	13	13	10	14	14	11	14	14	11
	P-HOOK	4	4	5	4	4	5	5	5	6	5	5	6	5	5	6	5	5	7	6	6	7	6	6	7
DESIGN PRESS.		+105/-115			+105/-115			+105/-115			+105/-115			+105/-115			+105/-115			+105/-115			+105/-115		
36" (30)	H&S	C4+1	C4+1	C4+2	C4+1	C4+1	C5+2	C4+1	C4+1	C5+2	C4+1	C4+1	C6+2	C4+1	C4+1	C6+2	C4+1	C4+1	C6+2	C4+1	C4+1	C7+2	C4+1	C4+1	C7+2
	JAMB	11	11	9	12	12	9	12	12	10	13	13	10	14	14	11	15	15	12	16	16	12	17	17	13
	P-HOOK	4	4	6	4	4	6	5	5	7	5	5	7	5	5	7	5	5	8	6	6	8	6	6	9
DESIGN PRESS.		+105/-115			+105/-115			+105/-115			+105/-115			+105/-115			+105/-115			+105/-115			+105/-115		
42" (36)	H&S	C4+1	C4+1	C5+2	C4+1	C4+1	C6+2	C4+1	C4+1	C6+2	C4+1	C4+1	C7+2	C4+1	C4+1	C7+2	C4+1	C4+1	C8+2	C4+1	C4+1	C8+2	C5+1	C5+1	C9+2
	JAMB	13	13	10	13	13	10	14	14	11	15	15	12	16	16	13	17	17	13	18	18	14	19	19	15
	P-HOOK	4	4	7	4	4	7	5	5	7	5	5	8	5	5	8	5	5	9	6	6	9	6	6	10
DESIGN PRESS.		+105/-115			+105/-115			+105/-115			+105/-115			+105/-115			+105/-115			+105/-115			+105/-114.1		
48" (40)	H&S	C4+2	C4+2	C5+3	C4+2	C4+2	C6+3	C4+2	C4+2	C6+3	C4+2	C4+2	C7+3	C4+2	C4+2	C7+3	C4+2	C4+2	C8+3	C4+2	C4+2	C9+3	C4+2	C4+2	C9+3
	JAMB	14	14	11	15	15	12	16	16	12	17	17	13	18	18	14	20	20	15	21	21	16	22	22	17
	P-HOOK	5	5	7	5	5	8	5	5	8	5	5	9	6	6	9	6	6	10	6	6	10	7	7	11
DESIGN PRESS.		+105/-115			+105/-115			+105/-115			+105/-115														
54" (46)	H&S	C4+2	C4+2	C6+3	C4+2	C4+2	C7+3	C4+2	C4+2	C7+3	C4+2	C4+2	C8+3												
	JAMB	16	16	12	17	17	13	18	18	14	19	19	15												
	P-HOOK	5	5	8	5	5	9	6	6	9	6	6	10												
DESIGN PRESS.		+105/-115			+105/-115			+105/-115			+105/-115														
60" (50)	H&S	C4+2	C4+2	C6+4	C4+2	C4+2	C7+4	C4+2	C4+2	C8+4	C4+2	C4+2	C8+4												
	JAMB	17	17	13	18	18	14	20	20	15	21	21	16												
	P-HOOK	5	5	9	6	6	9	6	6	10	6	6	11												

PANELS OVER 48" WIDE NOT AVAILABLE OVER 96" HIGH

TABLE 3A.

SILL HT. VS POS. DP

SILL HEIGHT	POS. DESIGN PRESSURE
1 5/8"	N/A
2 3/4"	+50.0 PSF
3 1/2"	+73.3 PSF
4 1/2"	+100.0 PSF
5 1/4"	+105.0 PSF
SEE NOTES 1-3	

PRODUCT REVISED
in complying with the Florida
Building Code
Acceptance No. 15-0609.12
Expiration Date 8/21/17
By [signature]
Miami Dade Product Control

1. POSITIVE PRESSURES IN TABLE ARE BASED ON THE USE OF THE 5 1/4" SILL.
2. WHEN USING THE 2 3/4" SILL, POSITIVE DP IS 50.0 PSF MAX., WITH THE 3 1/2" SILL, POSITIVE DP IS 73.3 PSF MAX AND WITH THE 4 1/2" SILL, POSITIVE DP IS 100.0 PSF MAX (NEGATIVE PRESSURES UNCHANGED). SEE TABLE 3A.
3. 2 3/4", 3 1/2", 4 1/2" AND 5 1/4" SILL HEIGHTS ARE TESTED FOR WATER INFILTRATION WHEREAS THE 1 5/8" SILL IS NOT AND MUST ONLY BE USED WHERE WATER RESISTANCE IS NOT REQUIRED. POSITIVE DESIGN PRESSURES SHOWN IN TABLE 3 MAY BE USED WHEN THE DOOR IS PROTECTED BY AN OVERHANG COMPLYING WITH THE FLORIDA BUILDING CODE (SEE ADJACENT DIAGRAM); THIS CONDITION IS NOT RATED FOR WATER INFILTRATION.
4. ANCHOR TYPES: 1. 1/4" ELCO ULTRACON (FORMERLY TAPCON) 2. 1/4" ELCO SS4 CRETE-FLEX 3. #12 STEEL SCREW (G5)
5. SEE SHEETS 10 THROUGH 13 FOR ANCHORAGE SPACING AND EMBEDMENT INFORMATION.
6. GLASS TYPE KEYS: (SEE NOTE 1, SHEET 1 FOR COMPLETE DESCRIPTIONS)
   2,4 - 7/16" LAMI (HS-HS W/ SGP OR SVS)
   8,10 - 9/16" LAMI (HS-HS W/ SGP OR SVS)

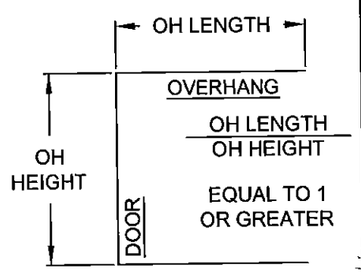

SEE NOTE 3

ANTHONY LYNN MILLER
LICENSE
No. 58705
STATE OF FLORIDA
PROFESSIONAL ENGINEER
5/29/15
A. LYNN MILLER, P.E.
P.E.# 58705

Revsd By:	Date:	Revisions:	
J.R.	05/27/15	C	FBC 2014 UPDATE, REV QUANT. FOR ANCHOR 2, CONC
J.J.	10/13/11	B	NO CHANGE THIS SHEET
F.K.	11/8/07	A	NEW DP AND ANCHORAGE TABLE
Drawn By: F.K.	Date: 5/1/07	Checked By:	Date:

1070 TECHNOLOGY DRIVE
NOKOMIS, FL 34275

P.O. BOX 1529
NOKOMIS, FL 34274

PGT
Visibly Better

Description: DP AND ANCHORAGE, LAMI TABLE 3

Title: ALUM. SLIDING GLASS DOOR, IMPACT

Series/Model:	Scale:	Sheet:	Drawing No.	Rev:
SGD760	NTS	6 of 23	8100-11	C

DESIGN PRESSURE AND ANCHORAGE - NO REINFORCEMENT - 4 1/2" OR 5 1/4" SILL (SEE NOTES BELOW FOR OTHER SILLS)

TABLE 4.

Laml I.G. w/ 7/16 or 9/16 Laml Ann/Heat w/ SGP or Vanceva Interlayer
GLASS TYPES: 13, 15, 19, 21, 25, 27, 31, 33

>HEAD & SILL (H&S) INTERLOCK & STRAIGHT & CORNER ASTRAGAL CLUSTER PLUS ANCHOR QTY. PER PANEL
>JAMB ANCHOR QTY. >P-HOOK ANCHOR QTY. (SEE DETAIL SHT. 13)

		DOOR HEIGHT																							
		80" (68)			84" (70)			90" (76)			96" (80)			102" (86)			108" (90)			114" (96)			120" (100)		
NOM. PANEL WIDTH	FRAME SIDE	1, CONC	2, CONC	2,3, WOOD	1, CONC	2, CONC	2,3, WOOD	1, CONC	2, CONC	2,3, WOOD	1, CONC	2, CONC	2,3, WOOD	1, CONC	2, CONC	2,3, WOOD	1, CONC	2, CONC	2,3, WOOD	1, CONC	2, CONC	2,3, WOOD	1, CONC	2, CONC	2,3, WOOD
DESIGN PRESS.		+80/-80			+80/-80			+80/-80			+80/-80			+60/-70			+60/-70			+60/-70			+60/-70		
24" (20)	H&S	C4+1	C4+1	C4+1	C4+1	C4+1	C4+1	C4+1	C4+1	C4+1	C4+1	C4+1	C4+1	C4+1	C4+1	C4+1	C4+1	C4+1	C4+1	C4+1	C4+1	C4+1	C4+1	C4+1	C4+1
	JAMB	8	8	8	8	8	8	9	9	9	9	9	9	10	10	10	10	10	10	11	11	11	11	11	11
	P-HOOK	4	4	4	4	4	4	5	5	5	5	5	5	5	5	5	5	5	5	6	6	6	6	6	6
DESIGN PRESS.		+80/-80			+80/-80			+80/-80			+80/-80			+60/-70			+60/-70			+60/-70			+60/-70		
30" (26)	H&S	C4+1	C4+1	C4+1	C4+1	C4+1	C4+1	C4+1	C4+1	C4+1	C4+1	C4+1	C4+1	C4+1	C4+1	C4+1	C4+1	C4+1	C4+1	C4+1	C4+1	C4+1	C4+1	C4+1	C4+1
	JAMB	8	8	8	8	8	8	9	9	9	9	9	9	10	10	10	10	10	10	11	11	11	11	11	11
	P-HOOK	4	4	4	4	4	4	5	5	5	5	5	5	5	5	5	5	5	5	6	6	6	6	6	6
DESIGN PRESS.		+80/-80			+80/-80			+80/-80			+80/-80			+60/-70			+60/-70			+60/-70			+60/-70		
36" (30)	H&S	C4+1	C4+1	C4+1	C4+1	C4+1	C4+1	C4+1	C4+1	C4+1	C4+1	C4+1	C4+1	C4+1	C4+1	C4+1	C4+1	C4+1	C4+1	C4+1	C4+1	C5+1	C4+1	C4+1	C5+1
	JAMB	8	8	8	9	9	8	9	9	9	10	10	9	10	10	10	10	10	10	11	11	11	11	11	11
	P-HOOK	4	4	5	4	4	5	5	5	5	5	5	5	5	5	5	5	5	5	6	6	6	6	6	6
DESIGN PRESS.		+80/-80			+80/-80			+80/-80			+80/-80			+60/-70			+60/-70			+60/-70			+60/-70		
42" (36)	H&S	C4+1	C4+1	C4+2	C4+1	C4+1	C4+2	C4+1	C4+1	C4+2	C4+1	C4+1	C4+2	C4+1	C4+1	C4+2	C4+1	C4+1	C4+2	C4+1	C4+1	C4+2	C4+1	C4+1	C5+2
	JAMB	9	9	8	10	10	8	10	10	9	11	11	9	11	11	10	11	11	10	12	12	11	12	12	11
	P-HOOK	4	4	5	4	4	5	5	5	6	5	5	6	5	5	6	5	5	6	6	6	6	6	6	7
DESIGN PRESS.		+80/-80			+80/-80			+80/-80			+80/-80			+60/-70			+60/-70			+60/-66.7			+60/-64.4		
48" (40)	H&S	C4+1	C4+1	C4+2	C4+1	C4+1	C4+2	C4+1	C4+1	C5+2	C4+1	C4+1	C5+2	C4+1	C4+1	C5+2	C4+1	C4+1	C5+2	C4+1	C4+1	C5+2	C4+1	C4+1	C5+2
	JAMB	10	10	8	11	11	8	12	12	9	12	12	10	12	12	10	13	13	10	13	13	11	13	13	11
	P-HOOK	4	4	6	4	4	6	5	5	6	5	5	7	5	5	6	5	5	7	6	6	7	6	6	7
DESIGN PRESS.		+80/-80			+80/-80			+80/-80			+75.1/-75.1														
54" (46)	H&S	C4+2	C4+2	C4+3	C4+2	C4+2	C4+3	C4+2	C4+2	C4+3	C4+1	C4+1	C5+2												
	JAMB	11	11	9	12	12	9	13	13	10	13	13	10												
	P-HOOK	4	4	6	4	4	6	5	5	7	5	5	7												
DESIGN PRESS.		+80/-80			+80/-80			+75.7/-75.7			+69.9/-69.9														
60" (50)	H&S	C4+2	C4+2	C4+3	C4+2	C4+2	C5+3	C4+2	C4+2	C5+3	C4+2	C4+2	C5+3												
	JAMB	12	12	10	13	13	10	14	14	10	13	13	10												
	P-HOOK	4	4	7	4	4	7	5	5	7	5	5	7												

SEE EXAMPLE OX-XO CORNER ANCHORAGE PLAN AND OXX STRAIGHT DOOR ANCHORAGE PLAN ON SHEET 10

PANELS OVER 48" WIDE NOT AVAILABLE OVER 96" HIGH

TABLE 4A.
SILL HT. VS POS. DP

SILL HEIGHT	POS. DESIGN PRESSURE
1 5/8"	N/A
2 3/4"	+50.0 PSF
3 1/2"	+73.3 PSF
4 1/2"	+80.0 PSF
5 1/4"	+80.0 PSF
SEE NOTES 1-3	

PRODUCT REVIEWED
as complying with the Florida
Building Code
Acceptance No. 15-0609.12
Expiration Date 5/2/17
By Ishang L. Hernandez
Miami Dade Product Control

1. POSITIVE PRESSURES IN TABLE ARE BASED ON THE USE OF THE 4 1/2" OR 5 1/4" SILL.
2. WHEN USING THE 2 3/4" SILL, POSITIVE DP IS 50 PSF MAX. AND WITH THE 3 1/2" SILL, POSITIVE PRESSURES IS 73.3 PSF MAX. (NEGATIVE PRESSURES UNCHANGED). SEE TABLE 4A.
3. 2 3/4", 3 1/2", 4 1/2" AND 5 1/4" SILL HEIGHTS ARE TESTED FOR WATER INFILTRATION WHEREAS THE 1 5/8" SILL IS NOT AND MUST ONLY BE USED WHERE WATER RESISTANCE IS NOT REQUIRED. POSITIVE DESIGN PRESSURES SHOWN IN TABLE 4 MAY BE USED WHEN THE DOOR IS PROTECTED BY AN OVERHANG COMPLYING WITH THE FLORIDA BUILDING CODE (SEE ADJACENT DIAGRAM); THIS CONDITION IS NOT RATED FOR WATER INFILTRATION.
4. ANCHOR TYPES: 1. 1/4" ELCO ULTRACON (FORMERLY TAPCON) 2. 1/4" ELCO SS4 CRETE-FLEX 3. #12 STEEL SCREW (G5)
5. SEE SHEETS 10 THROUGH 13 FOR ANCHORAGE SPACING AND EMBEDMENT INFORMATION.
6. GLASS TYPE KEYS: (SEE NOTE 1, SHEET 1 FOR COMPLETE DESCRIPTIONS)
   13,15 - 1 1/16" LAMI I.G. 3/16" T EXT. CAP, 3/8" AIR SPACE & 7/16" LAMI (AN-HS W/ SGP OR SVS)
   19,21 - 1 1/16" LAMI I.G. 3/16" T EXT. CAP, 5/16" AIR SPACE & 9/16" LAMI (AN-HS W/ SGP OR SVS)
   25,27 - 1 1/16" LAMI I.G. 1/4" T EXT. CAP, 5/16" AIR SPACE & 7/16" LAMI (AN-HS W/ SGP OR SVS)
   31,33 - 1 1/16" LAMI I.G. 1/4" T EXT. CAP, 1/4" AIR SPACE & 9/16" LAMI (AN-HS W/ SGP OR SVS)

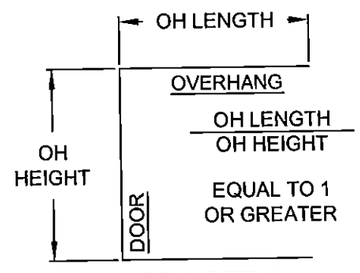

SEE NOTE 3

ANTHONY LYNN MILLER
LICENSE
No. 58705
STATE OF FLORIDA
PROFESSIONAL ENGINEER
5/09/15
A. LYNN MILLER, P.E.
P.E.# 58705

Revsd By:	Date:	Revisions:	
J.R.	05/27/15	C	FBC 2014 UPDATE, REV QUANT. FOR ANCHOR 2, CONC
J.J.	10/13/11	B	NO CHANGE THIS SHEET
F.K.	11/8/07	A	NEW DP AND ANCHORAGE TABLE
Drawn By: F.K.	Date: 5/1/07	Checked By:	Date:

1070 TECHNOLOGY DRIVE
NOKOMIS, FL 34275
P.O. BOX 1529
NOKOMIS, FL 34274

PGT Visibly Better

Description: DP AND ANCHORAGE, LAMI I.G. TABLE 4
Title: ALUM. SLIDING GLASS DOOR, IMPACT

Series/Model:	Scale:	Sheet:	Drawing No.	Rev:
SGD780	NTS	7 of 23	8100-11	C

DESIGN PRESSURE AND ANCHORAGE - FULL REINFORCEMENT - 5 1/4" SILL (SEE NOTES BELOW FOR OTHER SILLS)

TABLE 5.

Lami I.G. w/ 7/16 or 9/16 Lami Heat/Heat w/ SGP or Vanceva Interlayer
GLASS TYPES: 14, 16, 20, 22, 26, 28, 32, 34

>HEAD & SILL (H&S) INTERLOCK & STRAIGHT & CORNER ASTRAGAL CLUSTER PLUS ANCHOR QTY. PER PANEL
>JAMB ANCHOR QTY. >P-HOOK ANCHOR QTY. (SEE DETAIL SHT. 13)

NOM. PANEL WIDTH	FRAME SIDE	DOOR HEIGHT 80" (68) 1, CONC	80" (68) 2, CONC	80" (68) 2,3, WOOD	84" (70) 1, CONC	84" (70) 2, CONC	84" (70) 2,3, WOOD	90" (76) 1, CONC	90" (76) 2, CONC	90" (76) 2,3, WOOD	96" (80) 1, CONC	96" (80) 2, CONC	96" (80) 2,3, WOOD	102" (86) 1, CONC	102" (86) 2, CONC	102" (86) 2,3, WOOD	108" (90) 1, CONC	108" (90) 2, CONC	108" (90) 2,3, WOOD	114" (96) 1, CONC	114" (96) 2, CONC	114" (96) 2,3, WOOD	120" (100) 1, CONC	120" (100) 2, CONC	120" (100) 2,3, WOOD
DESIGN PRESS.		+105/-115			+105/-115			+105/-115			+105/-115			+105/-115			+105/-115			+105/-115			+105/-115		
24" (20)	H&S	C4+1	C4+1	C4+1	C4+1	C4+1	C4+1	C4+1	C4+1	C4+1	C4+1	C4+1	C4+1	C4+1	C4+1	C4+1	C4+1	C4+1	C5+1	C4+1	C4+1	C5+1	C4+1	C4+1	C5+1
	JAMB	8	8	8	8	8	8	9	9	9	9	9	9	10	10	10	11	11	10	11	11	11	12	12	11
	P-HOOK	4	4	4	4	4	5	5	5	5	5	5	5	5	5	5	5	5	6	6	6	6	6	6	6
DESIGN PRESS.		+105/-115			+105/-115			+105/-115			+105/-115			+105/-115			+105/-115			+105/-115			+105/-115		
30" (26)	H&S	C4+1	C4+1	C4+1	C4+1	C4+1	C5+1	C4+1	C4+1	C5+1	C4+1	C4+1	C5+1	C4+1	C4+1	C6+1	C4+1	C4+1	C6+1	C4+1	C4+1	C6+1	C4+1	C4+1	C7+1
	JAMB	9	9	8	10	10	8	11	11	9	11	11	9	12	12	10	13	13	10	14	14	11	14	14	11
	P-HOOK	4	4	5	4	4	5	5	5	6	5	5	6	5	5	6	5	5	7	6	6	7	6	6	7
DESIGN PRESS.		+105/-115			+105/-115			+105/-115			+105/-115			+105/-115			+105/-115			+105/-115			+105/-115		
36" (30)	H&S	C4+1	C4+1	C4+2	C4+1	C4+1	C5+2	C4+1	C4+1	C5+2	C4+1	C4+1	C6+2	C4+1	C4+1	C6+2	C4+1	C4+1	C6+2	C4+1	C4+1	C7+2	C4+1	C4+1	C7+2
	JAMB	11	11	9	12	12	9	12	12	10	13	13	10	14	14	11	15	15	12	16	16	12	17	17	13
	P-HOOK	4	4	6	4	4	6	5	5	7	5	5	7	5	5	7	5	5	8	6	6	8	6	6	9
DESIGN PRESS.		+105/-115			+105/-115			+105/-115			+105/-115			+105/-115			+105/-115			+105/-115			+105/-115		
42" (36)	H&S	C4+1	C4+1	C5+2	C4+1	C4+1	C6+2	C4+1	C4+1	C6+2	C4+1	C4+1	C7+2	C4+1	C4+1	C7+2	C4+1	C4+1	C8+2	C4+1	C4+1	C8+2	C5+1	C5+1	C9+2
	JAMB	13	13	10	13	13	10	14	14	11	15	15	12	16	16	13	17	17	13	18	18	14	19	19	15
	P-HOOK	4	4	7	4	4	7	5	5	7	5	5	8	5	5	8	5	5	9	6	6	9	6	6	10
DESIGN PRESS.		+105/-115			+105/-115			+105/-115			+105/-115			+105/-115			+105/-115			+105/-115			+105/-115		
48" (40)	H&S	C4+2	C4+2	C5+3	C4+2	C4+2	C6+3	C4+2	C4+2	C6+3	C4+2	C4+2	C7+3	C4+2	C4+2	C7+3	C4+2	C4+2	C8+3	C4+2	C4+2	C9+3	C4+2	C4+2	C9+3
	JAMB	14	14	11	15	15	12	16	16	12	17	17	13	18	18	14	20	20	15	21	21	16	22	22	17
	P-HOOK	5	5	7	5	5	8	5	5	8	5	5	9	6	6	9	6	6	10	6	6	10	7	7	11
DESIGN PRESS.		+105/-115			+105/-115			+105/-115			+105/-115														
54" (46)	H&S	C4+2	C4+2	C6+3	C4+2	C4+2	C7+3	C4+2	C4+2	C7+3	C4+2	C4+2	C8+3												
	JAMB	16	16	12	17	17	13	18	18	14	19	19	15												
	P-HOOK	5	5	8	5	5	9	6	6	9	6	6	10												
DESIGN PRESS.		+105/-115			+105/-115			+105/-115			+105/-115														
60" (50)	H&S	C4+2	C4+2	C6+4	C4+2	C4+2	C7+4	C4+2	C4+2	C8+4	C4+2	C4+2	C8+4												
	JAMB	17	17	13	18	18	14	20	20	15	21	21	16												
	P-HOOK	5	5	9	6	6	9	6	6	10	6	6	11												

PANELS OVER 48" WIDE NOT AVAILABLE OVER 96" HIGH

TABLE 5A.
SILL HT. VS POS. DP

SILL HEIGHT	POS. DESIGN PRESSURE
1 5/8"	N/A
2 3/4"	+50.0 PSF
3 1/2"	+73.3 PSF
4 1/2"	+100.0 PSF
5 1/4"	+105.0 PSF
SEE NOTES 1-3	

PRODUCT REVIEWED
as complying with the Florida
Building Code
Acceptance No. 15-0609.12
Expiration Date 2/12/17
By Ishan I. Chandra
Miami Dade Product Control

1. POSITIVE PRESSURES IN TABLE ARE BASED ON THE USE OF THE 5 1/4" SILL.
2. WHEN USING THE 2 3/4" SILL, POSITIVE DP IS 50.0 PSF MAX., WITH THE 3 1/2" SILL, POSITIVE DP IS 73.3 PSF MAX AND WITH THE 4 1/2" SILL, POSITIVE DP IS 100.0 PSF MAX (NEGATIVE PRESSURES UNCHANGED). SEE TABLE 5A.
3. 2 3/4", 3 1/2", 4 1/2" AND 5 1/4" SILL HEIGHTS ARE TESTED FOR WATER INFILTRATION WHEREAS THE 1 5/8" SILL IS NOT AND MUST ONLY BE USED WHERE WATER RESISTANCE IS NOT REQUIRED. POSITIVE DESIGN PRESSURES SHOWN IN TABLE 5 MAY BE USED WHEN THE DOOR IS PROTECTED BY AN OVERHANG COMPLYING WITH THE FLORIDA BUILDING CODE (SEE ADJACENT DIAGRAM); THIS CONDITION IS NOT RATED FOR WATER INFILTRATION.
4. ANCHOR TYPES: 1. 1/4" ELCO ULTRACON (FORMERLY TAPCON) 2. 1/4" ELCO SS4 CRETE-FLEX 3. #12 STEEL SCREW (G5)
5. SEE SHEETS 10 THROUGH 13 FOR ANCHORAGE SPACING AND EMBEDMENT INFORMATION.
6. GLASS TYPE KEYS: (SEE NOTE 1, SHEET 1 FOR COMPLETE DESCRIPTIONS)
   14,16 - 1 1/16" LAMI I.G. 3/16" T EXT. CAP, 3/8" AIR SPACE & 7/16" LAMI (HS-HS W/ SGP OR SVS)
   20,22 - 1 1/16" LAMI I.G. 3/16" T EXT. CAP, 5/16" AIR SPACE & 9/16" LAMI (HS-HS W/ SGP OR SVS)
   26,28 - 1 1/16" LAMI I.G. 1/4" T EXT. CAP, 5/16" AIR SPACE & 7/16" LAMI (HS-HS W/ SGP OR SVS)
   32,34 - 1 1/16" LAMI I.G. 1/4" T EXT. CAP, 1/4" AIR SPACE & 9/16" LAMI (HS-HS W/ SGP OR SVS)

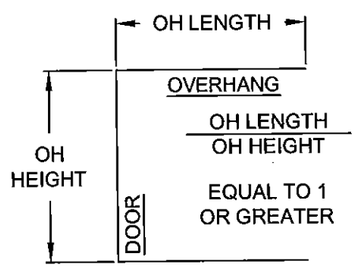

SEE NOTE 3

ANTHONY LYNN MILLER
LICENSE
No. 58705
5/29/15
STATE OF
FLORIDA
PROFESSIONAL ENGINEER
A. LYNN MILLER, P.E.
P.E.# 58705

Revsd By:	Date:	Revisions:	
J.R.	05/27/15	C	FBC 2014 UPDATE, REV QUANT. FOR ANCHOR 2, CONC
J.J.	10/13/11	B	NO CHANGE THIS SHEET
F.K.	11/8/07	A	NEW DP AND ANCHORAGE TABLE
Drawn By: F.K.	Date: 5/1/07	Checked By:	Date:

1070 TECHNOLOGY DRIVE
NOKOMIS, FL 34275

P.O. BOX 1529
NOKOMIS, FL 34274

PGT Visibly Better

Description: DP AND ANCHORAGE, LAMI I.G. TABLE 5
Title: ALUM. SLIDING GLASS DOOR, IMPACT

Series/Model:	Scale:	Sheet:	Drawing No.	Rev:
SGD780	NTS	8 of 23	8100-11	C

DESIGN PRESSURE AND ANCHORAGE - NO REINFORCEMENT

TABLE 6.

4 1/2" OR 5 1/4" SILL (SEE NOTES BELOW FOR OTHER SILLS)

All Lami or Lami I.G. w/ PVB Interlayer

GLASS TYPES: 5, 6, 11, 12, 17, 18, 23, 24, 29, 30, 35, 36

>HEAD & SILL (H&S) INTERLOCK & STRAIGHT & CORNER ASTRAGAL CLUSTER PLUS ANCHOR QTY. PER PANEL
>JAMB ANCHOR QTY. >P-HOOK ANCHOR QTY. (SEE DETAIL SHT. 13)

		DOOR HEIGHT											
		80" (68)			84" (70)			90" (76)			96" (80)		
NOM. PANEL WIDTH	FRAME SIDE	1, CONC	2, CONC	2,3, WOOD	1, CONC	2, CONC	2,3, WOOD	1, CONC	2, CONC	2,3, WOOD	1, CONC	2, CONC	2,3, WOOD
DESIGN PRESS.		+65/-65			+65/-65			+65/-65			+65/-65		
24" (20)	H&S	C4+1	C4+1	C4+1	C4+1	C4+1	C4+1	C4+1	C4+1	C4+1	C4+1	C4+1	C4+1
	JAMB	8	8	8	8	8	8	9	9	9	9	9	9
	P-HOOK	4	4	4	4	4	4	5	5	5	5	5	5
DESIGN PRESS.		+65/-65			+65/-65			+65/-65			+65/-65		
30" (26)	H&S	C4+1	C4+1	C4+1	C4+1	C4+1	C4+1	C4+1	C4+1	C4+1	C4+1	C4+1	C4+1
	JAMB	8	8	8	8	8	8	9	9	9	9	9	9
	P-HOOK	4	4	4	4	4	4	5	5	5	5	5	5
DESIGN PRESS.		+65/-65			+65/-65			+65/-65			+65/-65		
36" (30)	H&S	C4+1	C4+1	C4+1	C4+1	C4+1	C4+1	C4+1	C4+1	C4+1	C4+1	C4+1	C4+1
	JAMB	8	8	8	8	8	8	9	9	9	9	9	9
	P-HOOK	4	4	4	4	4	4	5	5	5	5	5	5
DESIGN PRESS.		+65/-65			+65/-65			+65/-65			+65/-65		
42" (36)	H&S	C4+1	C4+1	C4+2	C4+1	C4+1	C4+2	C4+1	C4+1	C4+2	C4+1	C4+1	C4+2
	JAMB	8	8	8	8	8	8	9	9	9	9	9	9
	P-HOOK	4	4	4	4	4	5	5	5	5	5	5	5
DESIGN PRESS.		+65/-65			+65/-65			+65/-65			+65/-65		
48" (40)	H&S	C4+1	C4+1	C4+2	C4+1	C4+1	C4+2	C4+1	C4+1	C4+2	C4+1	C4+1	C4+2
	JAMB	9	9	8	9	9	8	10	10	9	10	10	9
	P-HOOK	4	4	5	4	4	5	5	5	5	5	5	6

TABLE 6A.

SILL HT. VS POS. DP

SILL HEIGHT	POS. DESIGN PRESSURE
1 5/8"	N/A
2 3/4"	+50.0 PSF
3 1/2"	+73.3 PSF
4 1/2"	+100.0 PSF
5 1/4"	+105.0 PSF
SEE NOTES 1-3	

1. POSITIVE PRESSURES IN TABLE ARE BASED ON THE USE OF THE 4 1/2" OR 5 1/4" SILL.
2. WHEN USING THE 2 3/4" SILL, POSITIVE DP IS 50 PSF MAX. AND WITH THE 3 1/2" SILL, POSITIVE PRESSURES IS 73.3 PSF MAX. (NEGATIVE PRESSURES UNCHANGED). SEE TABLE 6A.
3. 2 3/4", 3 1/2", 4 1/2" AND 5 1/4" SILL HEIGHTS ARE TESTED FOR WATER INFILTRATION WHEREAS THE 1 5/8" SILL IS NOT AND MUST ONLY BE USED WHERE WATER RESISTANCE IS NOT REQUIRED. POSITIVE DESIGN PRESSURES SHOWN IN TABLE 6 MAY BE USED WHEN THE DOOR IS PROTECTED BY AN OVERHANG COMPLYING WITH THE FLORIDA BUILDING CODE (SEE ADJACENT DIAGRAM); THIS CONDITION IS NOT RATED FOR WATER INFILTRATION.
4. ANCHOR TYPES: 1. 1/4" ELCO ULTRACON (FORMERLY TAPCON) 2. 1/4" ELCO SS4 CRETE-FLEX 3. #12 STEEL SCREW (G5)
5. SEE SHEETS 10 THROUGH 13 FOR ANCHORAGE SPACING AND EMBEDMENT INFORMATION.
6. GLASS TYPE KEYS: (SEE NOTE 1, SHEET 1 FOR COMPLETE DESCRIPTIONS)
   5,6 - 7/16" LAMI (AN-HS W/ DBPVB OR SSPVB)
   11,12 - 9/16" LAMI (AN-HS W/ DBPVB OR SSPVB)
   17,18 - 1 1/16" LAMI I.G. 3/16" T EXT. CAP, 3/8" AIR SPACE & 7/16" LAMI (AN-HS W/ DBPVB OR SSPVB)
   23,24 - 1 1/16" LAMI I.G. 3/16" T EXT. CAP, 5/16" AIR SPACE & 9/16" LAMI (AN-HS W/ DBPVB OR SSPVB)
   29,30 - 1 1/16" LAMI I.G. 1/4" T EXT. CAP, 5/16" AIR SPACE & 7/16" LAMI (AN-HS W/ DBPVB OR SSPVB)
   35,36 - 1 1/16" LAMI I.G. 1/4" T EXT. CAP, 1/4" AIR SPACE & 9/16" LAMI (AN-HS W/ DBPVB OR SSPVB)

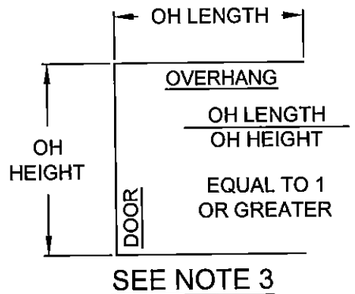

SEE NOTE 3

PRODUCT REVIEWED
as complying with the Florida Building Code
Acceptance No. 15-0669.12
Expiration Date 8/12/17
By [signature]
Miami Dade Product Control

ANTHONY LYNN MILLER
LICENSE
No. 58705
5/29/15
STATE OF FLORIDA
PROFESSIONAL ENGINEER

A. LYNN MILLER, P.E.
P.E.# 58705

Revsd By:	Date:	Revisions:	
J.R.	05/27/15	C	FBC 2014 UPDATE, REV QUANT. FOR ANCHOR 2, CONC
J.J.	10/13/11	B	NO CHANGE THIS SHEET
F.K.	11/8/07	A	NEW DP AND ANCHORAGE TABLE
Drawn By: F.K.	Date: 5/1/07	Checked By:	Date:

1070 TECHNOLOGY DRIVE
NOKOMIS, FL 34275
P.O. BOX 1529
NOKOMIS, FL 34274

PGT Visibly Better

Description: DP AND ANCHORAGE, LAMI & LAMI I.G. TABLE 6

Title: ALUM. SLIDING GLASS DOOR, IMPACT

Series/Model:	Scale:	Sheet:	Drawing No.	Rev:
SGD780	NTS	9 of 23	8100-11	C

HVHZ ANCHORAGE REQUIREMENTS NOTES:

1. APPROVED ANCHOR TYPES: 1) 1/4" ELCO ULTRACON (FORMERLY TAPCON) 2) 1/4" ELCO SS4 CRETE-FLEX 3) #12 STEEL SCREW (G5)
2. ANCHOR LOCATION SPACING FOR ANCHOR QUANTITIES SPECIFIED IN TABLES 1-6, SHTS. 4-9:

HEAD & SILL..... 6" MAX. FROM FRAME CORNERS. USE SPECIFIED CLUSTER FROM APPROPRIATE TABLES, SHTS. 4-9 AT EACH INTERLOCK AND STRAIGHT AND CORNER ASTRAGAL LOCATION, PLUS SPECIFIED QUANTITY OF ADDITIONAL ANCHORS PER PANEL (THE 6" FROM CORNER ANCHORS CAN BE INCLUDED). ADDITIONAL ANCHORS 24" MAX. ON CENTER. SEE EXAMPLE ANCHORAGE PLANS BELOW AND EXAMPLE CLUSTERS ON SHT. 11.

JAMBS & P-HOOKS... 7 11/16" MAX. FROM BOTTOM AND 24 1/2" MAX. O.C. UTILIZING ANCHOR QUANTITIES FROM APPROPRIATE TABLES, SHTS. 4-9. SEE P-HOOK ANCHOR DETAILS ON SHEET 13.

"ANCHORS PER PANEL" ARE THOSE AT THE HEAD AND SILL BETWEEN CLUSTERS OR THOSE BETWEEN A CLUSTER AND A FRAME JAMB OR P-HOOK.

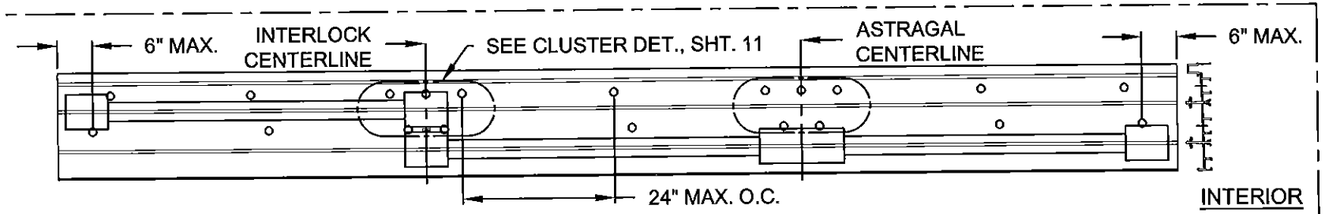

A EXAMPLE OXX ANCHORAGE PLAN:

C5+2 HEAD & SILL ANCHORAGE (3 PANEL, 2-TRACK EXAMPLE SHOWN) = (20) ANCHORS TOTAL

(3) PANEL, 48" x 96" DOOR FROM TABLE 4, SHT. 7, #12 WOOD SCREWS IN WOOD SUBSTRATE

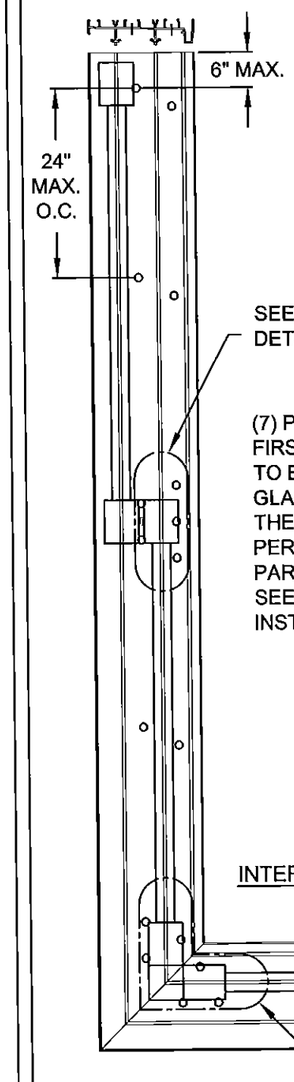

C5+2 & CORNERS = (27) ANCHORS TOTAL AT HEAD AND AT SILL

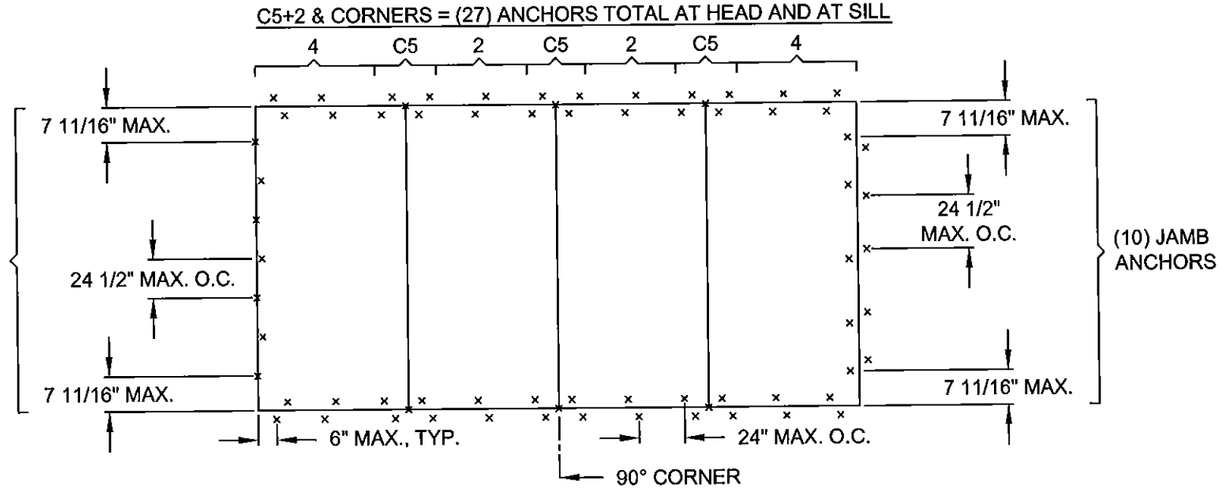

A EXAMPLE OX-XO CORNER ANCHORAGE PLAN:

(4) PANEL, 48" x 96" DOOR FROM TABLE 4, SHT. 7, #12 WOOD SCREWS IN WOOD SUBSTRATE

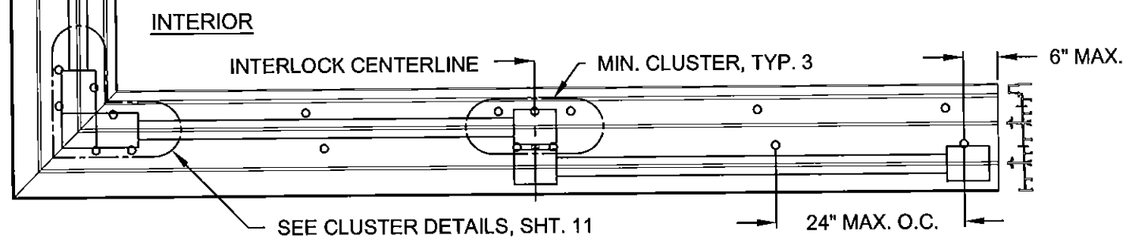

PRODUCT REVIEWED
as complying with the Florida Building Code
Acceptance No. 15-0609.12
Expiration Date 8/21/17
By [illegible]
Miami Dade Product Control

ANTHONY LYNN MILLER
LICENSE
No. 58705
STATE OF FLORIDA
PROFESSIONAL ENGINEER
5/29/15

A. LYNN MILLER, P.E.
P.E.# 58705

Revised By:	Date:	Revisions:	
J.R.	05/27/15	C	NO CHANGE THIS SHEET
J.J.	10/13/11	B	NO CHANGE THIS SHEET
F.K.	11/8/07	A	MOVE AND EXPAND ANCHOR TABLES TO SHTS.4-9 REVISE EXAMPLE ANCHOR PLAN.
Drawn By: F.K.	Date: 5/1/07	Checked By: J.J.	Date: XX/XX/07

1070 TECHNOLOGY DRIVE
NOKOMIS, FL 34275

P.O. BOX 1529
NOKOMIS, FL 34274

PGT Visibly Better

Description: ANCHORAGE SPACING & EXAMPLE PLANS

Title: ALUM. SLIDING GLASS DOOR, IMPACT

Series/Model:	Scale:	Sheet:	Drawing No.	Rev:
SGD780	NTS	10 of 23	8100-11	C

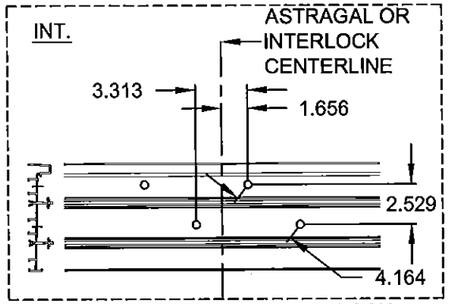

2-TRACK, ASTRAGAL / INTERLOCK
4 ANCHOR CLUSTER

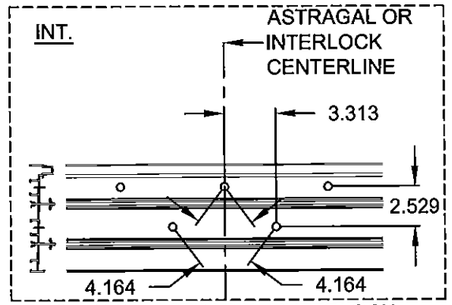

2-TRACK, ASTRAGAL / INTERLOCK
5 ANCHOR CLUSTER

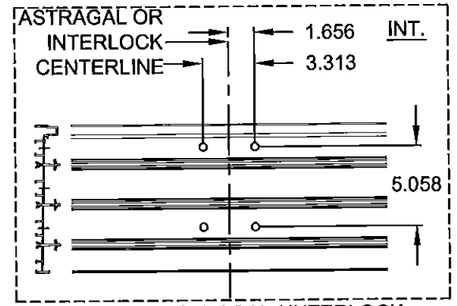

3-TRACK, ASTRAGAL / INTERLOCK
4 ANCHOR CLUSTER

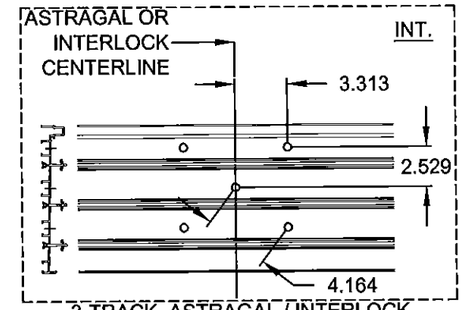

3-TRACK, ASTRAGAL / INTERLOCK
5 ANCHOR CLUSTER

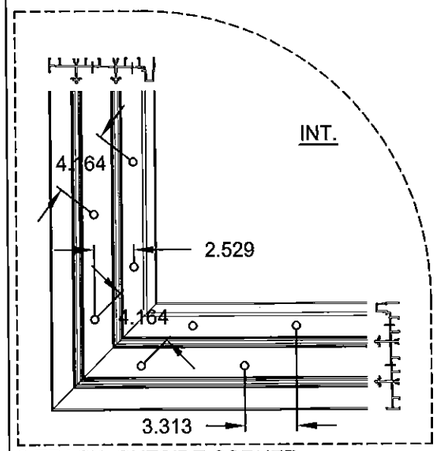

2-TRACK, OUTSIDE CORNER
A 8 ANCHOR CLUSTER

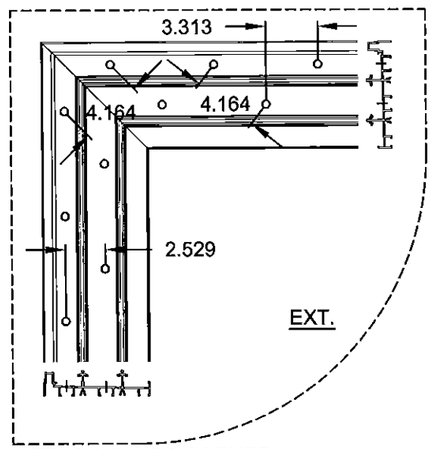

2-TRACK, INSIDE CORNER
A 8 ANCHOR CLUSTER

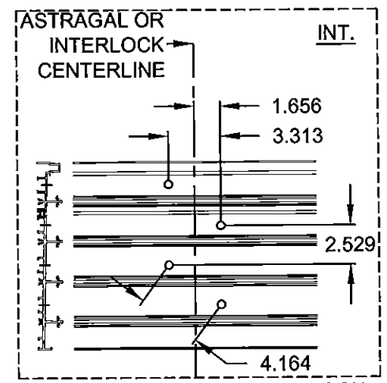

4-TRACK, ASTRAGAL / INTERLOCK
A 4 ANCHOR CLUSTER

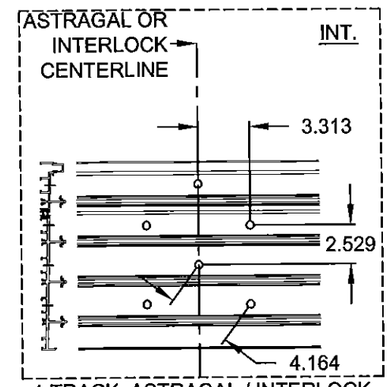

4-TRACK, ASTRAGAL / INTERLOCK
A 6 ANCHOR CLUSTER

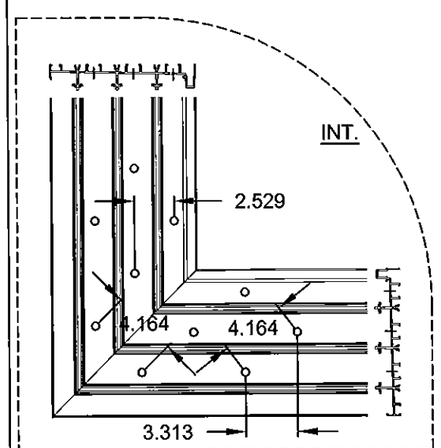

3-TRACK, OUTSIDE CORNER
A 10 ANCHOR CLUSTER

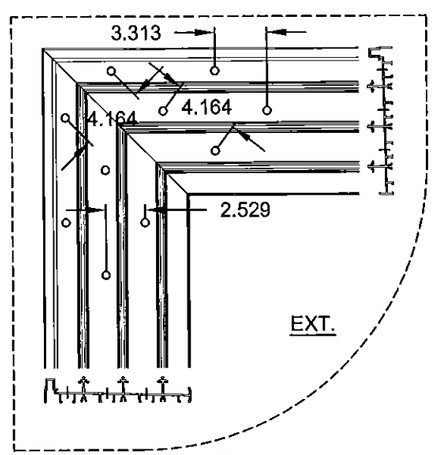

3-TRACK, INSIDE CORNER
A 10 ANCHOR CLUSTER

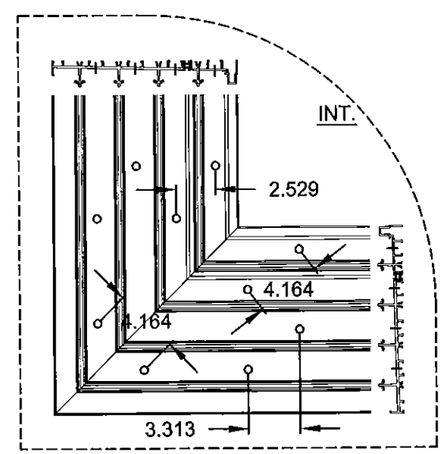

4-TRACK, OUTSIDE CORNER
A 10 ANCHOR CLUSTER

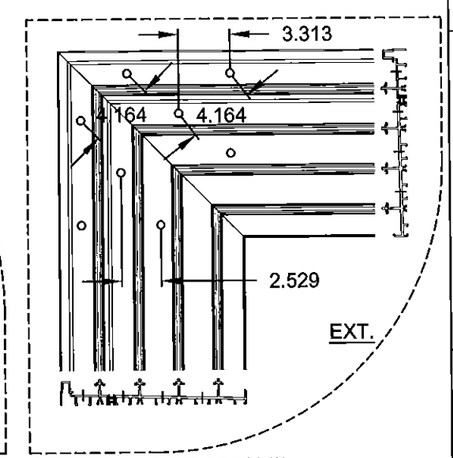

4-TRACK, INSIDE CORNER
A 8 ANCHOR CLUSTER

PRODUCT REVIEWED
as complying with the Florida
Building Code
Acceptance No. 15-0609.12
Expiration Date 8/12/17
By
Miami Dade Product Control

ANTHONY LYNN MILLER
LICENSE
No. 58705
STATE OF FLORIDA
PROFESSIONAL ENGINEER
5/29/15

A. LYNN MILLER, P.E.
P.E.# 58705

Revsd By:	Date:	Revisions:	
J.R.	05/27/15	C	NO CHANGE THIS SHEET
J.J.	10/13/11	B	NO CHANGE THIS SHEET
F.K.	11/8/07	A	NEW SHEET. ADD 4-TRACK EXAMPLE CLUSTER AND CORNER EXAMPLE CLUSTER DETAILS.
Drawn By: F.K.	Date: 5/1/07	Checked By: J.J.	Date: XX/XX/07

1070 TECHNOLOGY DRIVE
NOKOMIS, FL 34275

P.O. BOX 1529
NOKOMIS, FL 34274

PGT
Visibly Better

Description: ANCHORAGE, EXAMPLE CLUSTERS

Title: ALUM. SLIDING GLASS DOOR, IMPACT

Series/Model:	Scale:	Sheet:	Drawing No.	Rev:
SGD780	NTS	11 of 23	8100-11	C

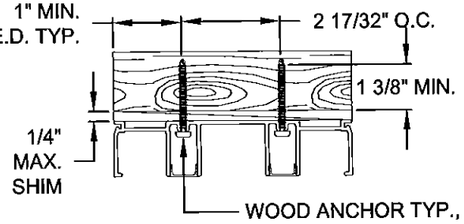

DETAIL AA, 2-TRACK FRAME HEAD
WOOD INSTALLATION

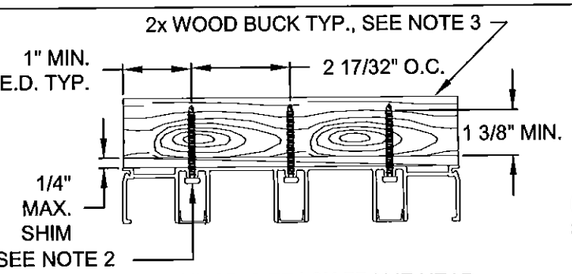

DETAIL AB, 3-TRACK FRAME HEAD
WOOD INSTALLATION

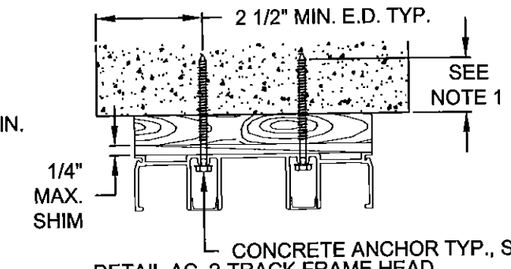

DETAIL AC, 2-TRACK FRAME HEAD
CONCRETE INSTALLATION

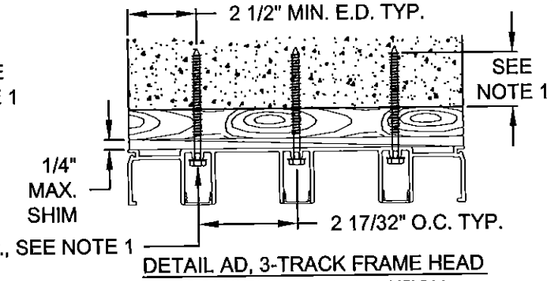

DETAIL AD, 3-TRACK FRAME HEAD
CONCRETE INSTALLATION

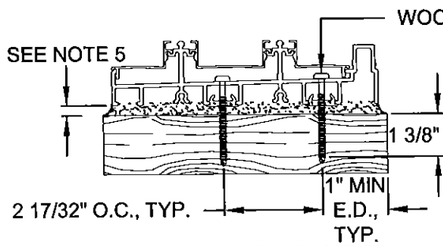

DETAIL AE, 2-TRACK FRAME SILL
WOOD INSTALLATION

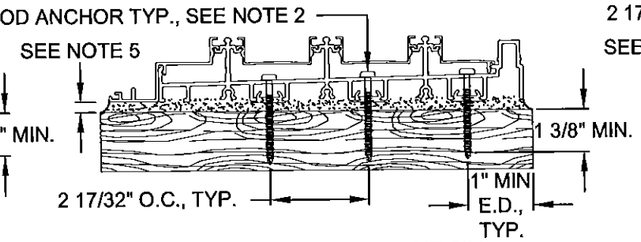

DETAIL AF, 3-TRACK FRAME SILL
WOOD INSTALLATION

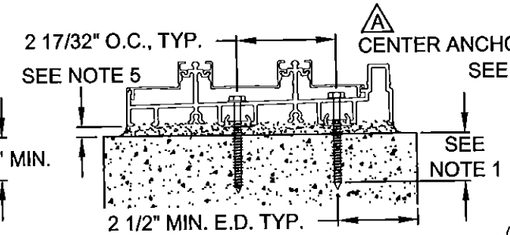

DETAIL AG, 2-TRACK FRAME SILL
CONCRETE INSTALLATION

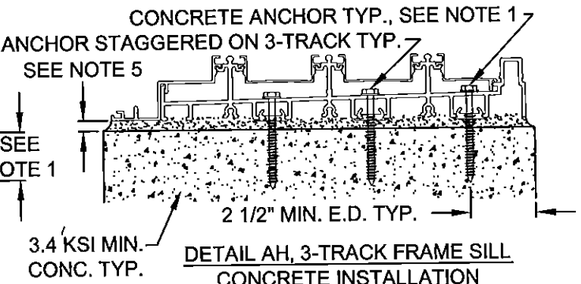

DETAIL AH, 3-TRACK FRAME SILL
CONCRETE INSTALLATION

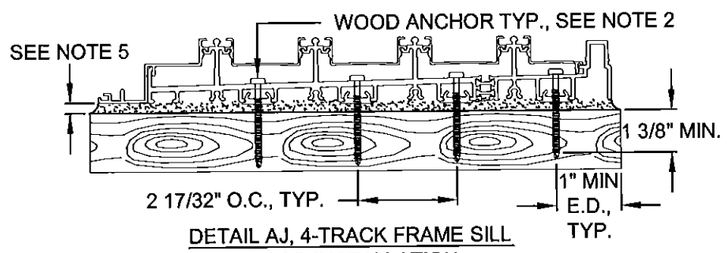

DETAIL AJ, 4-TRACK FRAME SILL
WOOD INSTALLATION A

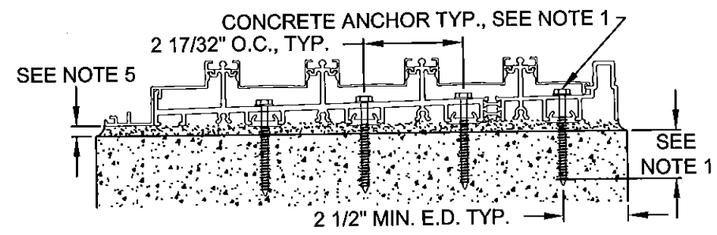

DETAIL AK, 4-TRACK FRAME SILL
CONCRETE INSTALLATION A

NOTES PERTAINING TO ANCHORAGE DETAILS ON SHTS. 12-13: A

1. FOR CONCRETE APPLICATIONS IN MIAMI-DADE COUNTY, USE ONLY MIAMI-DADE COUNTY APPROVED ELCO 1/4" ULTRACON (FORMERLY TAPCON) - MIN. 1 3/8" EMBED. OR 1/4" ELCO SS4 CRETE-FLEX - 1 3/4" MIN. EMBED.
2. FOR WOOD APPLICATIONS USE #12 STEEL SCREWS (G5). 1/4" ELCO SS4 CRETE-FLEX MAY BE USED INSTEAD OF #12 SCREWS.
3. WOOD BUCKS DEPICTED AS 1x ARE LESS THAN 1 1/2" THICK. 1x WOOD BUCKS ARE OPTIONAL IF UNIT IS INSTALLED DIRECTLY TO SOLID CONCRETE. WOOD BUCKS DEPICTED AS 2x ARE 1 1/2" THICK OR GREATER. INSTALLATION TO THE SUBSTRATE OF WOOD BUCKS TO BE ENGINEERED BY OTHERS OR AS APPROVED BY THE AUTHORITY HAVING JURISDICTION (AHJ).
4. FOR ATTACHMENT TO ALUMINUM: THE ALUMINUM SHALL BE A MINIMUM STRENGTH OF 6063-T5 AND A MINIMUM OF 1/8" THICK. THE ALUMINUM STRUCTURAL MEMBER SHALL BE OF A SIZE TO PROVIDE FULL SUPPORT TO THE DOOR FRAME SIMILAR TO THAT SHOWN IN THE DETAILS USING 2x WOOD BUCKS. THE ANCHORS SHALL BE #12 SHEET METAL SCREWS WITH FULL THREAD ENGAGEMENT INTO THE ALUMINUM. IF THESE CRITERIA ARE MET, THE FULL DESIGN PRESSURES USING ANCHORAGE REQUIREMENTS SHOWN IN TABLES 1-6, SHTS. 4-9, FOR ANCHOR TYPE 3 ARE ACCEPTABLE.
5. IF SILL IS TIGHT TO SUBSTRATE, GROUT OR OTHER MATERIAL IS NOT REQUIRED. IF USED, NON-SHRINK, NON-METALLIC GROUT, 3400 PSI MIN., (DONE BY OTHERS) MUST FULLY SUPPORT THE ENTIRE LENGTH OF THE SILL THAT IS NOT TIGHT TO THE SUBSTRATE, AND TRANSFER SHEAR LOAD TO SUBSTRATE. IF SUBSTRATE IS WOOD, 30# FELT PAPER OR MASTIC IS REQUIRED BETWEEN THE GROUT AND WOOD SUBSTRATE, OR AS APPROVED BY THE AUTHORITY HAVING JURISDICTION.

PRODUCT REVISED
as complying with the Florida Building Code
Acceptance No. 15-0609.12
Expiration Date 8/12/17
By [signature]
Miami Dade Product Control

ANTHONY LYNN MILLER
LICENSE
No. 58705
5/29/15
STATE OF FLORIDA
PROFESSIONAL ENGINEER
A. LYNN MILLER, P.E.
P.E.# 58705

Revsd By:	Date:	Revisions:	
J.R.	05/27/15	C	NO CHANGE THIS SHEET
J.J.	10/13/11	B	NO CHANGE THIS SHEET
F.K.	11/8/07	A	ADD 4-TRACK FRAME SILL DETAILS. DETAIL AH CENTER ANCHOR STAG.
Drawn By: F.K.	Date: 5/1/07	Checked By: J.J.	Date: XX/XX/07

1070 TECHNOLOGY DRIVE
NOKOMIS, FL 34275

P.O. BOX 1529
NOKOMIS, FL 34274

PGT
Visibly Better

Description: ANCHORAGE DETAILS

Title: ALUM. SLIDING GLASS DOOR, IMPACT

Series/Model:	Scale:	Sheet:	Drawing No.	Rev:
SGD780	NTS	12 of 23	8100-11	C

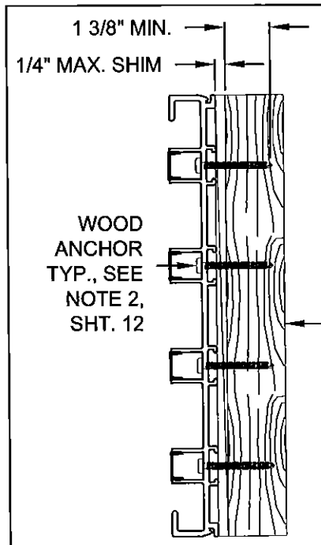

DETAIL AL, 4-TRACK FRAME JAMB
WOOD INSTALLATION

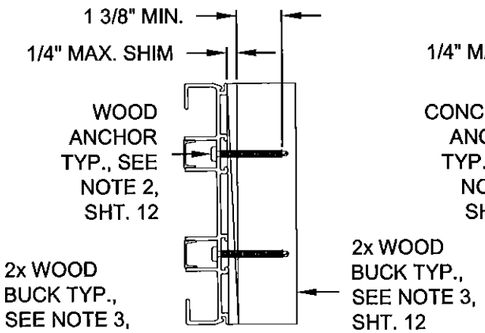

DETAIL AM, 2-TRACK FRAME JAMB
WOOD INSTALLATION

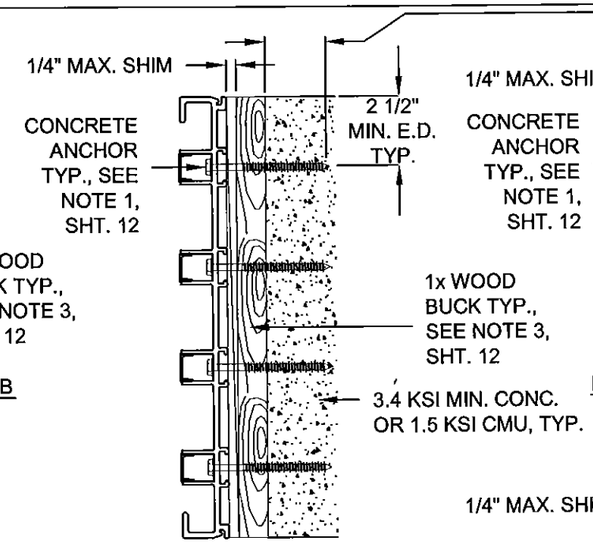

DETAIL AN, 4-TRACK FRAME JAMB
CONCRETE INSTALLATION

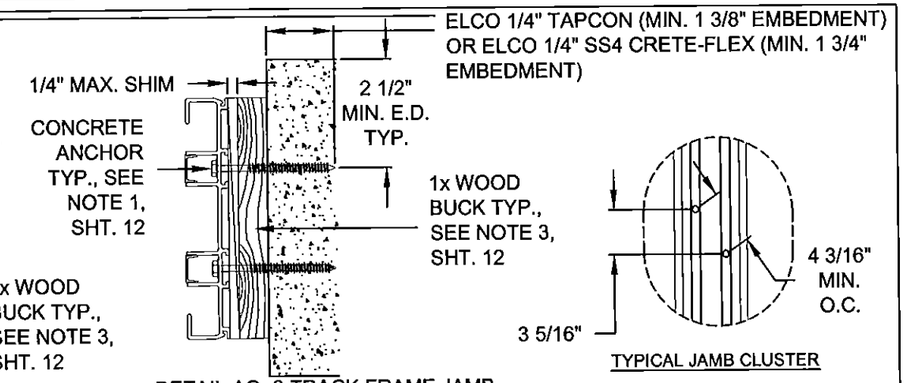

TYPICAL JAMB CLUSTER

DETAIL AO, 2-TRACK FRAME JAMB
CONCRETE INSTALLATION

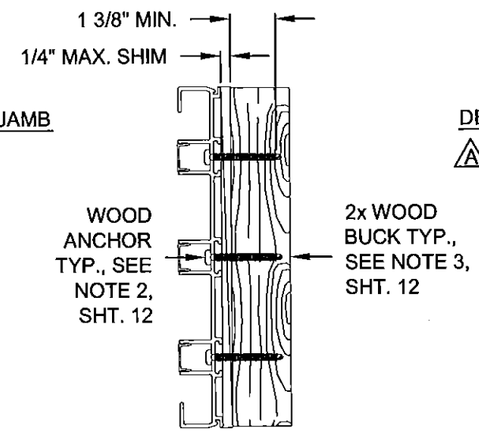

DETAIL AP, 3-TRACK FRAME JAMB
WOOD INSTALLATION

A
4 3/16" MIN. O.C. DIAGONAL STAGGERED SPACING, TYP. ALL JAMB DETAILS

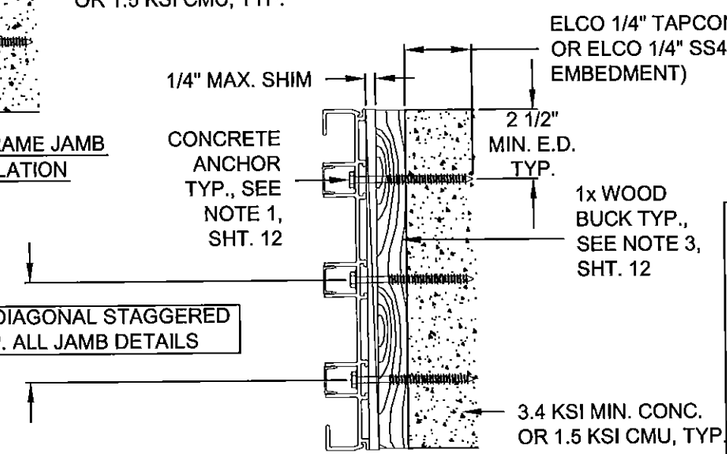

DETAIL AQ, 3-TRACK FRAME JAMB
CONCRETE INSTALLATION

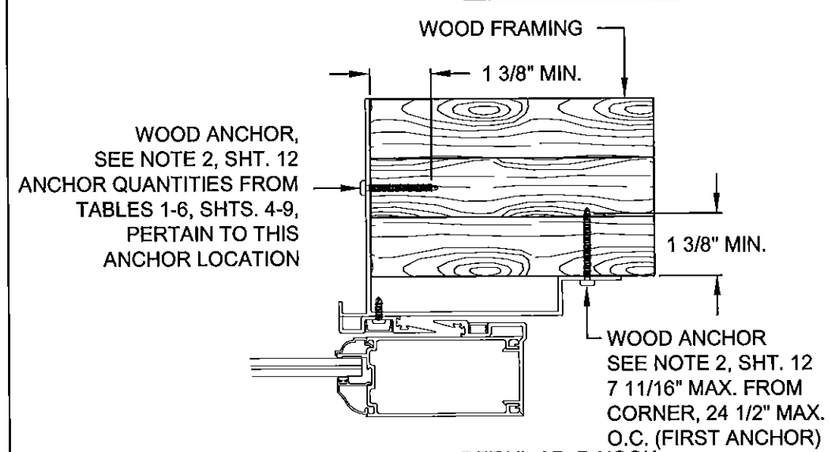

DETAIL AR, P-HOOK
WOOD INSTALLATION

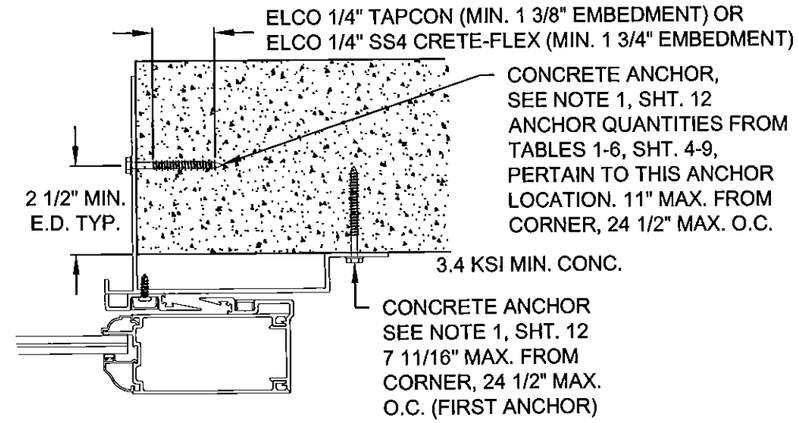

DETAIL AS, P-HOOK
CONCRETE INSTALLATION

PRODUCT REVIEWED
as complying with the Florida Building Code
Acceptance No. 15-0609.12
Expiration Date 8/12/17
By [signature]
Miami Dade Product Control

ANTHONY LYNN MILLER
LICENSE
No. 58705
5/29/15
STATE OF FLORIDA
PROFESSIONAL ENGINEER

A. LYNN MILLER, P.E.
P.E.# 58705

Revsd By:	Date:	Revisions:	
J.R.	05/27/15	C	NO CHANGE THIS SHEET
J.J.	10/13/11	B	NO CHANGE THIS SHEET
F.K.	11/8/07	A	ADD 4-TRACK FRAME JAMB DETAILS AND UPDATE SHT. REF. ALL DETAILS..
Drawn By: F.K.	Date: 5/1/07	Checked By: J.J.	Date: XX/XX/07

1070 TECHNOLOGY DRIVE
NOKOMIS, FL 34275

P.O. BOX 1529
NOKOMIS, FL 34274

PGT
Visibly Better

Description: ANCHORAGE DETAILS

Title: ALUM. SLIDING GLASS DOOR, IMPACT

Series/Model:	Scale:	Sheet:	Drawing No.	Rev:
SGD780	NTS	13 of 23	8100-11	C

NOTES: A

1. SEE SHEET 15 FOR INDIVIDUAL PANEL CONFIGURATIONS. MAX. NOMINAL PANEL WIDTH = 60". SHTS. 16-20 FOR SECTION DETAILS AND SHTS. 4-13 FOR ANCHORAGE DETAILS.
2. REINFORCEMENT LOCATIONS: REINFORCEMENTS ARE REQUIRED IN THE EXTERIOR INTERLOCKS OF DOORS. SEE SECTION DETAIL C, SHT. 18.
3. DLO WIDTH = NOM. PANEL WIDTH - 7 29/32" DLO HEIGHT = DOOR HEIGHT - 3 3/8"
4. (1) LOCK (ITEMS 154-161) AT EACH LOCKSTILE, LOCKING INTO KEEPER (ITEM 170) AT FRAME JAMB OR ASTRAGAL.

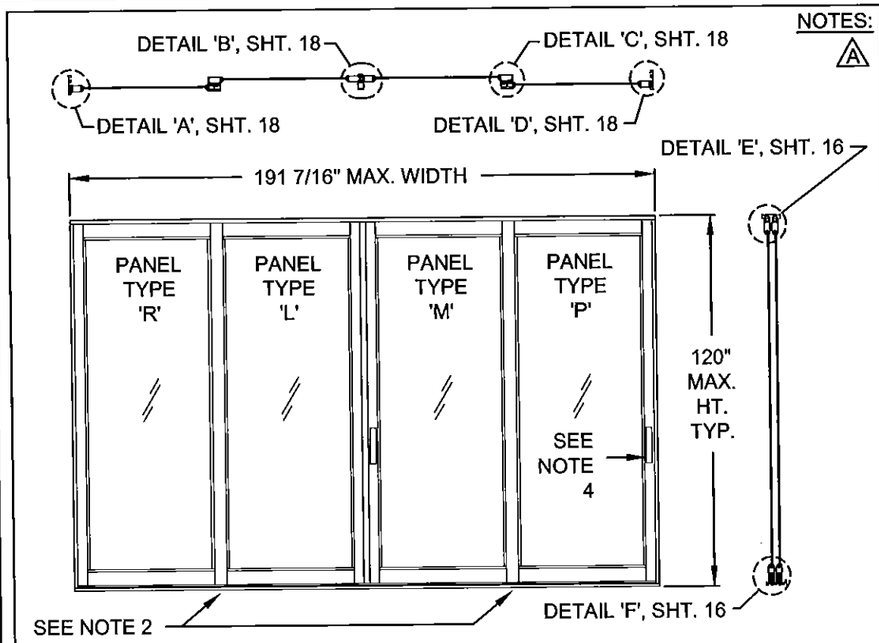

OXXX (2 TRACK)

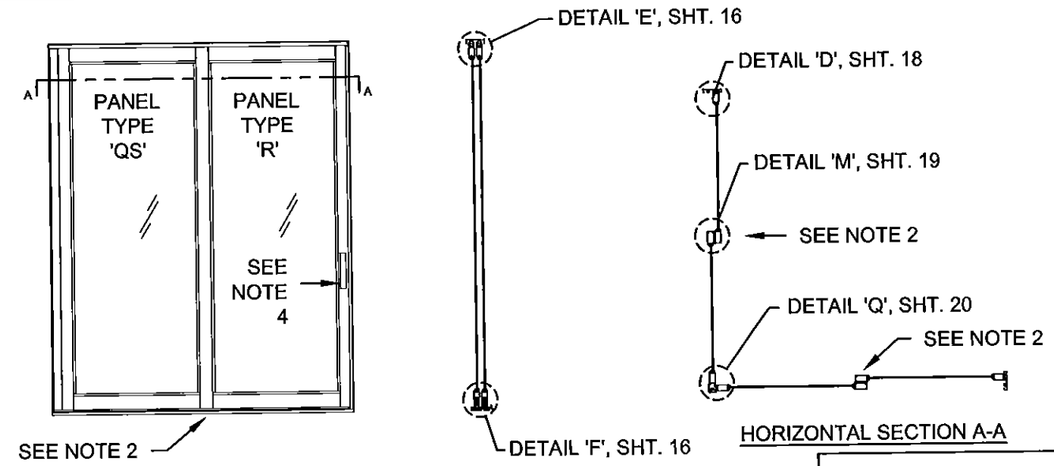

HORIZONTAL SECTION A-A

XX-XX (2 TRACK OUTSIDE CORNER) A

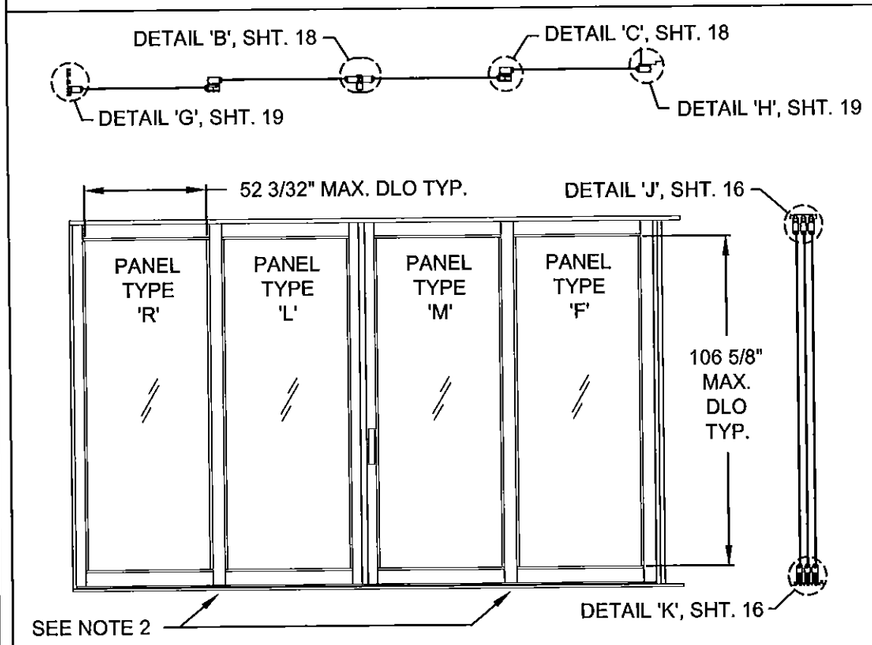

OXXXp (3 TRACK RIGHT POCKET)

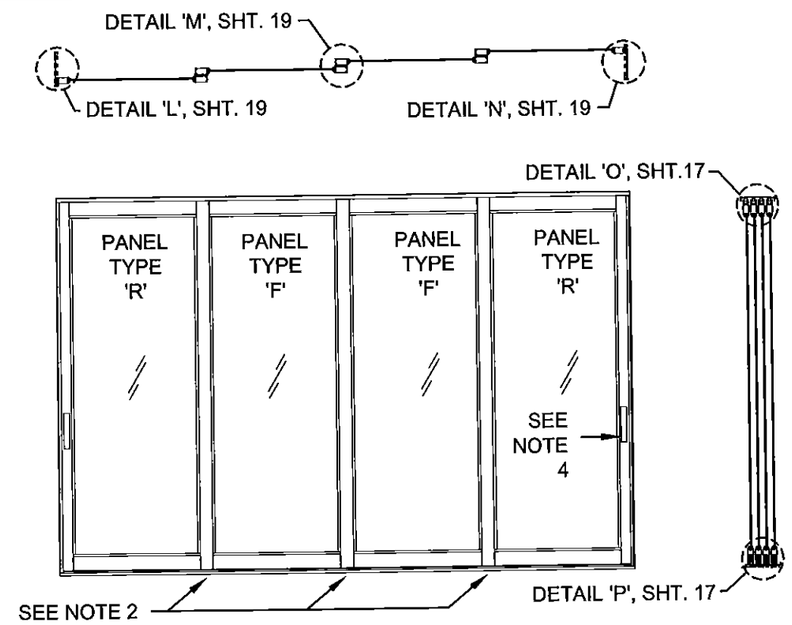

XXXX (4 TRACK BY-PASS) A

PRODUCT REVIEWED
as complying with the Florida
Building Code
Acceptance No 15-0609.12
Expiration Date 8/2/17
By Ishag I. Chavit
Miami Dade Product Control

ANTHONY LYNN MILLER
LICENSE
No. 58705
5/29/15
STATE OF FLORIDA
PROFESSIONAL ENGINEER
A. LYNN MILLER, P.E.
P.E.# 58705

Revsd By:	Date:	Revisions:	
J.R.	05/27/15	C	NO CHANGE THIS SHEET
J.J.	10/13/11	B	NO CHANGE THIS SHEET
F.K.	11/8/07	A	ADD EXPANDED CONFIG. INCLUDING CORNER DOOR EXAMPLE. CONDENSE NOTES 1,3 & 4. REVISE NOTE 2 CONCERNING REINF. APPLICABILITY.
Drawn By: F.K.	Date: 5/1/07	Checked By: J.J.	Date: XX/XX/07

1070 TECHNOLOGY DRIVE
NOKOMIS, FL 34275

P.O. BOX 1529
NOKOMIS, FL 34274

PGT
Visibly Better

Description: EXAMPLE ELEVATIONS/CONFIGURATIONS

Title: ALUM. SLIDING GLASS DOOR, IMPACT

Series/Model:	Scale:	Sheet:	Drawing No.	Rev:
SGD780	NTS	14 of 23	8100-11	C

PANEL LETTER				PANEL LETTER			
P	SINGLE INTERLOCK		FIXED LOCKSTILE	GR	DOUBLE INTERLOCK		LOCKSTILE
R	FIXED LOCKSTILE		SINGLE INTERLOCK	U (BOX OUT)	ASTRAGAL OUT		LOCKSTILE
T (BOX OUT)	ASTRAGAL OUT		FIXED LOCKSTILE	U (BOX IN)	ASTRAGAL IN		LOCKSTILE
T (BOX IN)	ASTRAGAL IN		FIXED LOCKSTILE	A	SINGLE INTERLOCK		LOCKSTILE
S (BOX OUT)	FIXED LOCKSTILE		ASTRAGAL OUT	D	LOCKSTILE		SINGLE INTERLOCK
S (BOX IN)	FIXED LOCKSTILE		ASTRAGAL IN	G	LOCKSTILE		DOUBLE INTERLOCK
Y	FIXED LOCKSTILE		DOUBLE INTERLOCK	J (BOX OUT)	LOCKSTILE		ASTRAGAL OUT
YR	DOUBLE INTERLOCK		FIXED LOCKSTILE	J (BOX IN)	LOCKSTILE		ASTRAGAL IN
W (BOX IN)	DOUBLE INTERLOCK		ASTRAGAL IN	M	LOCKSTILE		SINGLE INTERLOCK
WR (BOX OUT)	ASTRAGAL OUT		DOUBLE INTERLOCK	CS A	ASTRAGAL RECEIVER		SINGLE INTERLOCK
L (BOX OUT)	SINGLE INTERLOCK		ASTRAGAL OUT	SC A	SINGLE INTERLOCK		ASTRAGAL RECEIVER
LR (BOX OUT)	ASTRAGAL OUT		SINGLE INTERLOCK	QS A	CORNER LOCKSTILE		SINGLE INTERLOCK
N (BOX IN)	ASTRAGAL IN		SINGLE INTERLOCK	SQ A	SINGLE INTERLOCK		CORNER LOCKSTILE
C (BOX IN)	SINGLE INTERLOCK		ASTRAGAL IN	AS A	ASTRAGAL RECEIVER		SINGLE INTERLOCK
B	SINGLE INTERLOCK		SINGLE INTERLOCK	SA A	SINGLE INTERLOCK		ASTRAGAL RECEIVER
F	SINGLE INTERLOCK		SINGLE INTERLOCK	CI A	CORNER LOCKSTILE		SINGLE INTERLOCK
E	SINGLE INTERLOCK		SINGLE INTERLOCK	IC A	SINGLE INTERLOCK		CORNER LOCKSTILE
I	DOUBLE INTERLOCK		DOUBLE INTERLOCK	CF A	ASTRAGAL RECEIVER		FIXED LOCKSTILE
K	SINGLE INTERLOCK		LOCKSTILE	FC A	FIXED LOCKSTILE		ASTRAGAL RECEIVER

NOTE:
1. MAXIMUM NOMINAL PANEL WIDTH FOR ALL PANEL CONFIGURATIONS EQUALS 60" A

INTERIOR
(ALL PANEL TYPES)
EXTERIOR

PRODUCT REVISED
in complying with the Florida Building Code
Acceptance No. 15-0605.12
Expiration Date 8/12/17
By [signature]
Miami Dade Product Control

ANTHONY LYNN MILLER
LICENSE
No. 58705
5/29/15
STATE OF FLORIDA
PROFESSIONAL ENGINEER

A. LYNN MILLER, P.E.
P.E.# 58705

Revsd By:	Date:	Revisions:	
J.R.	05/27/15	C	NO CHANGE THIS SHEET
J.J.	10/13/11	B	NO CHANGE THIS SHEET
F.K.	11/8/07	A	ADD PANEL OPTIONS CS-FCTO FACILITATE CORNER DOOR OPTIONS AND REVISE NOTE TO MAX. NOM. PANEL WIDTH OF 60".
Drawn By: F.K.	Date: 5/1/07	Checked By: J.J.	Date: XX/XX/07

1070 TECHNOLOGY DRIVE
NOKOMIS, FL 34275

P.O. BOX 1529
NOKOMIS, FL 34274

PGT
Visibly Better

Description: PANEL TYPES

Title: ALUM. SLIDING GLASS DOOR, IMPACT

Series/Model:	Scale:	Sheet:	Drawing No.	Rev:
SGD780	NTS	15 of 23	8100-11	C

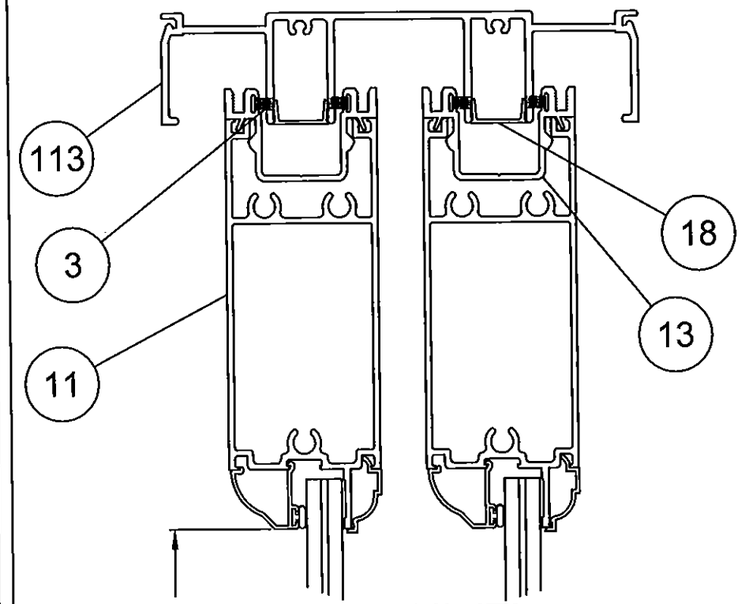

DETAIL 'E'

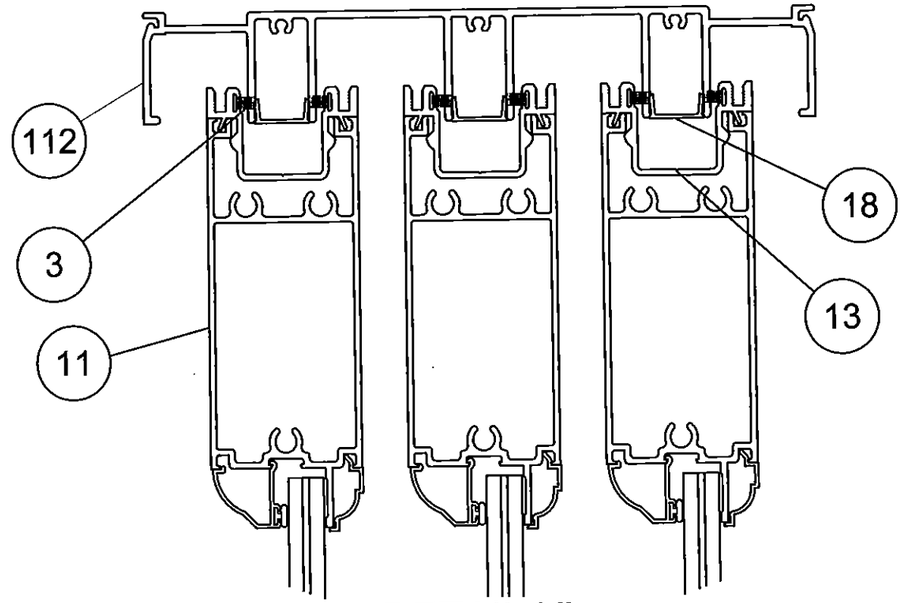

DETAIL 'J'

EXTERIOR INTERIOR
(ALL VERT. SECTIONS)

106 5/8"
MAX.
DLO
TYP.

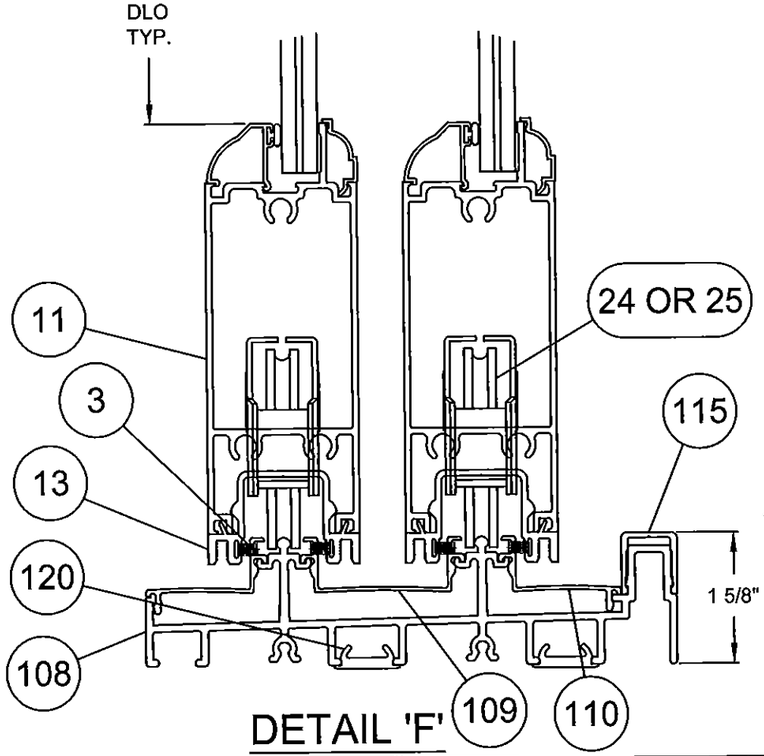

DETAIL 'F'

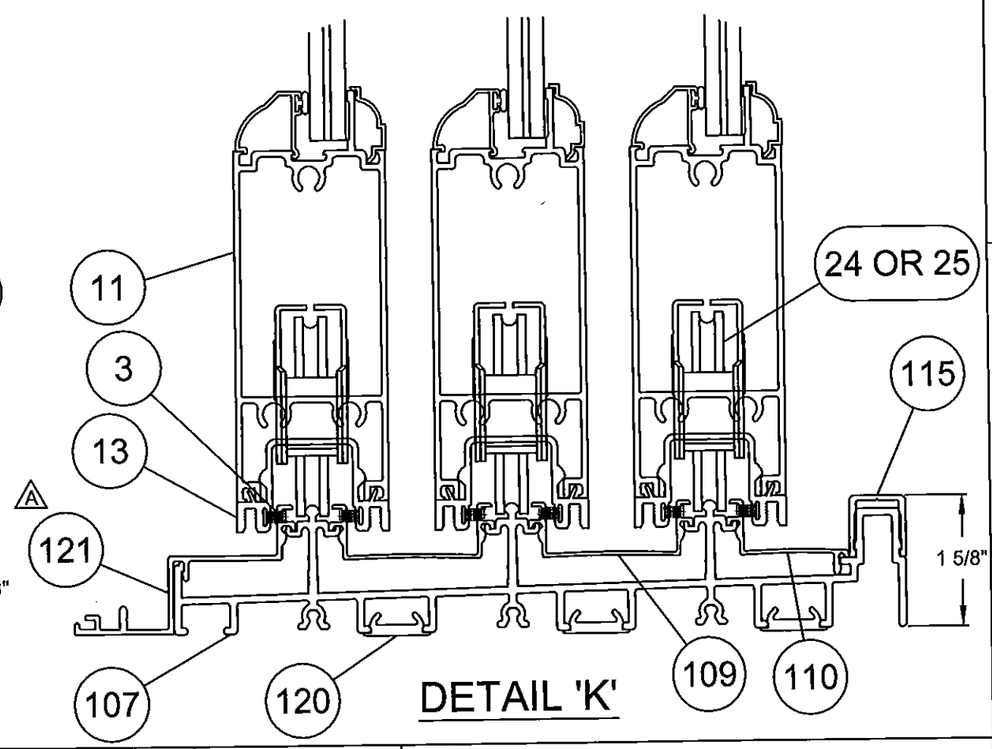

DETAIL 'K'

PRODUCT REVIEWED
as complying with the Florida
Building Code
Acceptance No. 15-0609.12
Expiration Date 8/2/17
By
Miami Dade Product Control

ANTHONY LYNN MILLER
LICENSE
No. 58705
STATE OF
FLORIDA
PROFESSIONAL ENGINEER
5/29/15

A. LYNN MILLER, P.E.
P.E.# 58705

Revised By:	Date:	Revisions:	
J.R.	05/27/15	C	NO CHANGE THIS SHEET
J.J.	10/13/11	B	NO CHANGE THIS SHEET
F.K.	11/8/07	A	CORRECT ITEMS NUMBERS TO MATCH PARTS LIST. ADD EXT SILL COVER
Drawn By: F.K.	Date: 5/1/07	Checked By: J.J.	Date: XX/XX/07

1070 TECHNOLOGY DRIVE
NOKOMIS, FL 34275

P.O. BOX 1529
NOKOMIS, FL 34274

PGT
Visibly Better

Description: VERTICAL SECTION DETAILS

Title: ALUM. SLIDING GLASS DOOR, IMPACT

Series/Model:	Scale:	Sheet:	Drawing No.	Rev:
SGD780	1/2x	16 of 23	8100-11	C

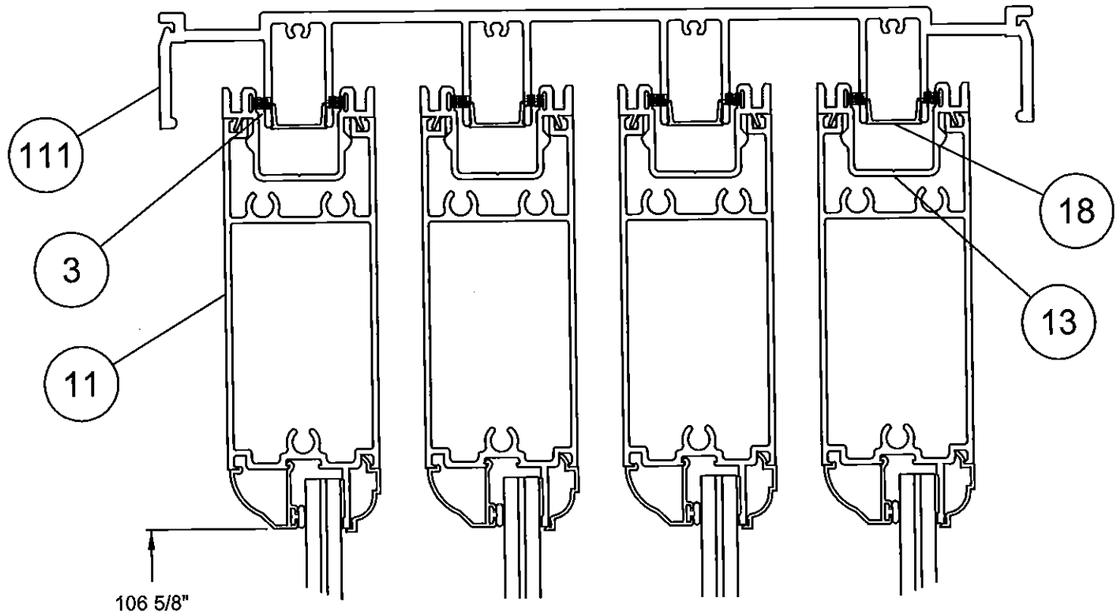

A DETAIL 'O'

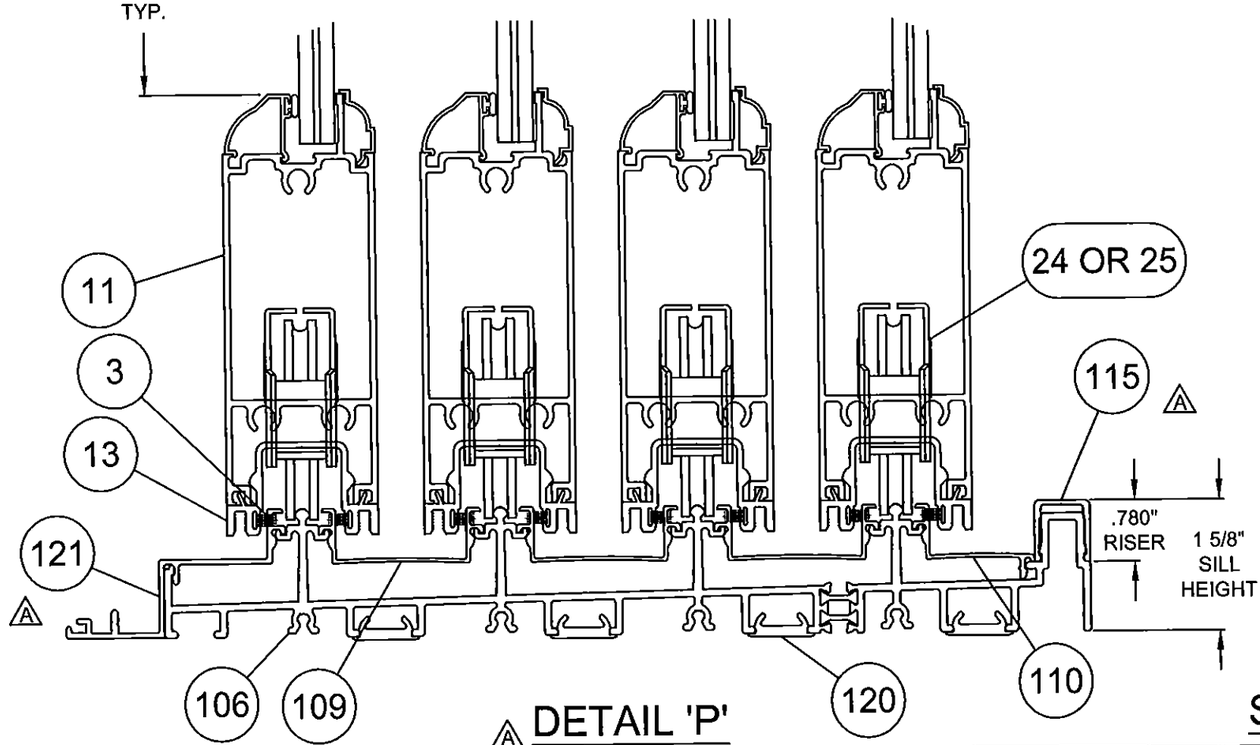

A DETAIL 'P'

EXTERIOR INTERIOR
(ALL VERT. SECTIONS)

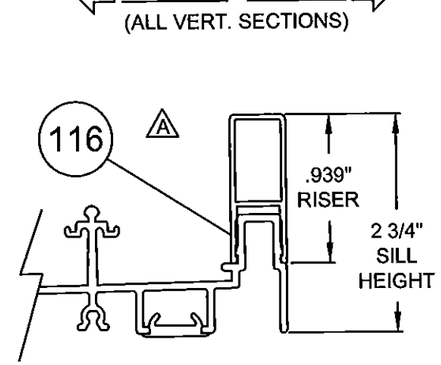

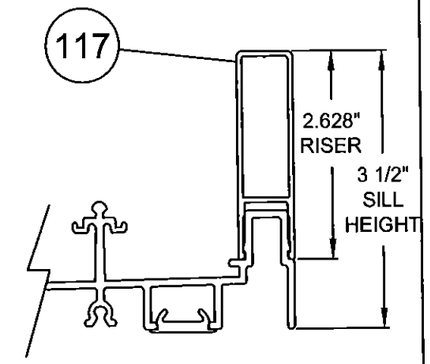

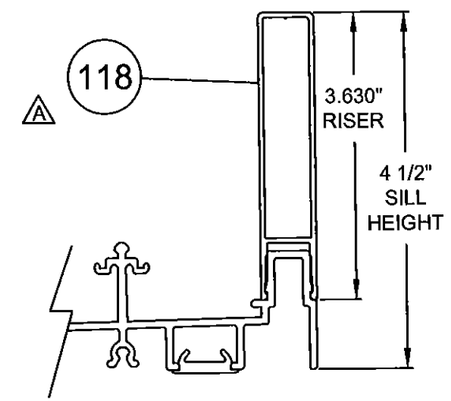

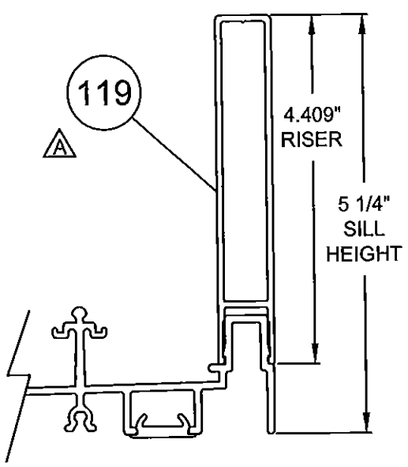

A SILL RISERS OPTIONS

PRODUCT REVIEWED
as complying with the Florida
Building Code
Acceptance No 15-0605.12
Expiration Date 8/12/17
By Lihang L. Chang
Miami Dade Product Control

ANTHONY LYNN MILLER
LICENSE
No. 58705
STATE OF FLORIDA
PROFESSIONAL ENGINEER
5/29/15
A. LYNN MILLER, P.E.
P.E.# 58705

Revised By:	Date:	Revisions:	
J.R.	05/27/15	C	NO CHANGE THIS SHEET
J.J.	10/13/11	B	NO CHANGE THIS SHEET
F.K.	11/8/07	A	CORRECT ITEMS NUMBERS TO MATCH PARTS LIST. ADD DETAILS O & P, 4-TRACK HEAD & SILL. CHG. ALTERNATE TO SILL OPT.
Drawn By: F.K.	Date: 5/1/07	Checked By: J.J.	Date: XX/XX/07

1070 TECHNOLOGY DRIVE
NOKOMIS, FL 34275

P.O. BOX 1529
NOKOMIS, FL 34274

PGT
Visibly Better

Description: VERTICAL SECT. DETAILS & SILL RISERS OPT.

Title: ALUM. SLIDING GLASS DOOR, IMPACT

Series/Model:	Scale:	Sheet:	Drawing No.	Rev:
SGD780	1/2x	17 of 23	8100-11	C

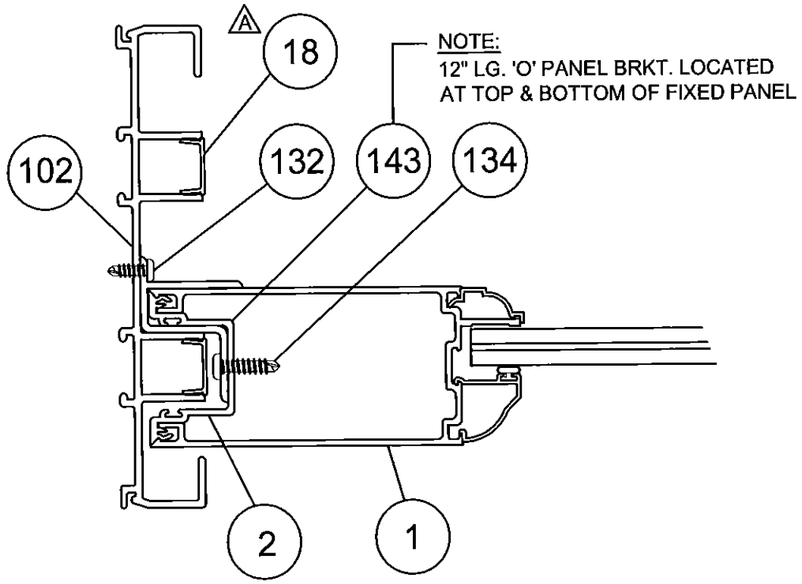

NOTE:
12" LG. 'O' PANEL BRKT. LOCATED AT TOP & BOTTOM OF FIXED PANEL

DETAIL 'A' (FIXED PANEL)

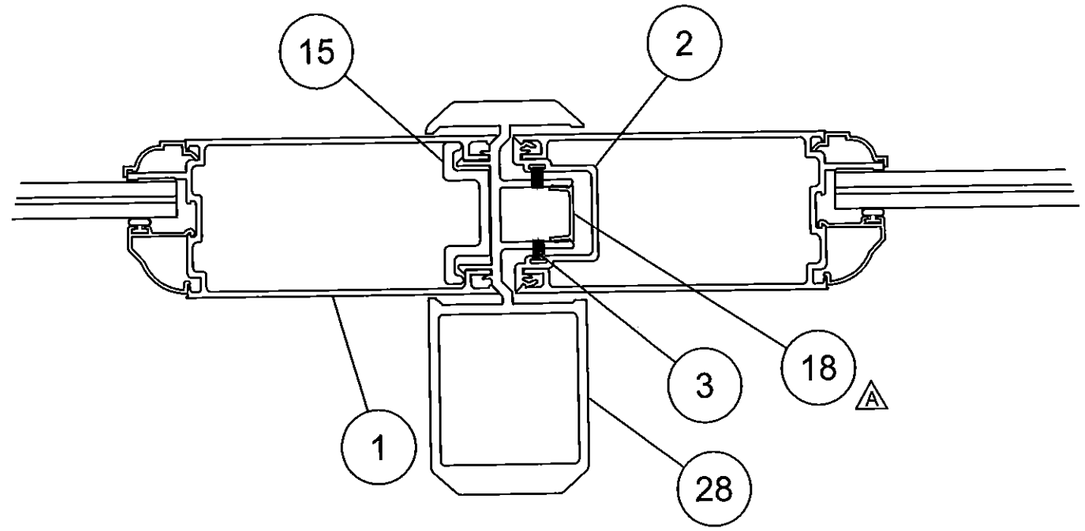

DETAIL 'B'

INTERIOR
(ALL HORIZ. SECTIONS)
EXTERIOR

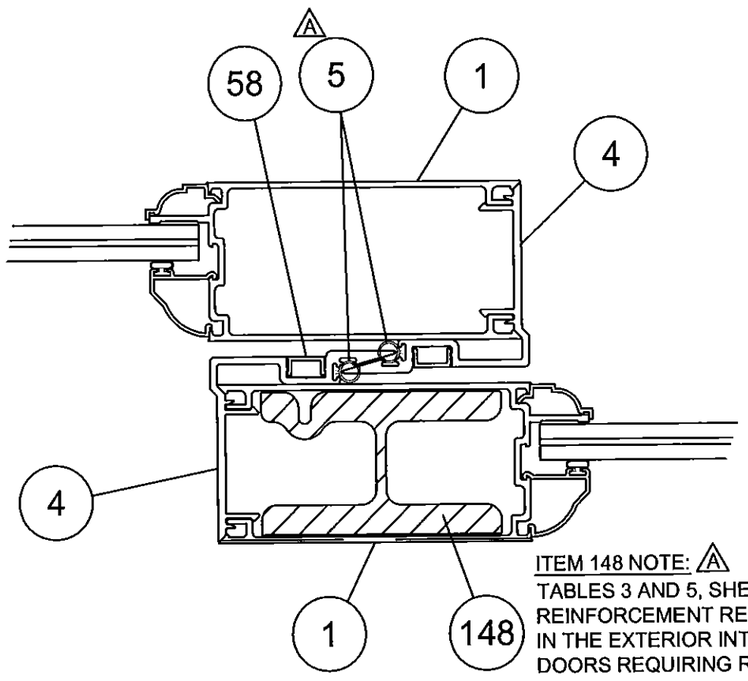

ITEM 148 NOTE: A
TABLES 3 AND 5, SHEETS 6 AND 8
REINFORCEMENT REQUIRED ONLY
IN THE EXTERIOR INTERLOCK OF
DOORS REQUIRING REINFORCEMENT

DETAIL 'C' (REINFORCED)

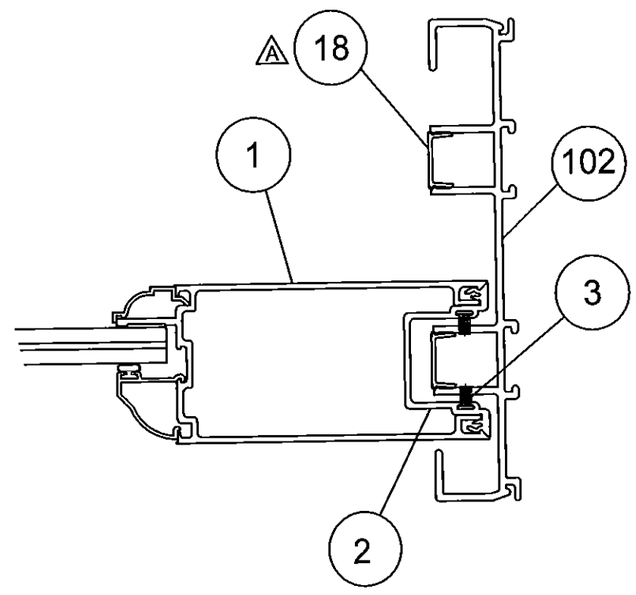

DETAIL 'D'

PRODUCT REVIEWED
as complying with the Florida
Building Code
Acceptance No. 15-0609.12
Expiration Date 8/7/17
By
Miami Dade Product Control

ANTHONY LYNN MILLER
LICENSE
No. 58705
5/29/15
STATE OF FLORIDA
PROFESSIONAL ENGINEER
A. LYNN MILLER, P.E.
P.E.# 58705

Revsd By:	Date:	Revisions:	
J.R.	05/27/15	C	NO CHANGE THIS SHEET
J.J.	10/13/11	B	NO CHANGE THIS SHEET
F.K.	11/8/07	A	CORRECT ITEMS NUMBERS TO MATCH PARTS LIST. REVISE DETAIL C NOTE CONCERNING REINFORCEMENT.
Drawn By: F.K.	Date: 5/1/07	Checked By: J.J.	Date: XX/XX/07

1070 TECHNOLOGY DRIVE
NOKOMIS, FL 34275

P.O. BOX 1529
NOKOMIS, FL 34274

PGT
Visibly Better

Description: HORIZONTAL SECTION DETAILS

Title: ALUM. SLIDING GLASS DOOR, IMPACT

Series/Model:	Scale:	Sheet:	Drawing No.	Rev:
SGD780	1/2x	18 of 23	8100-11	C

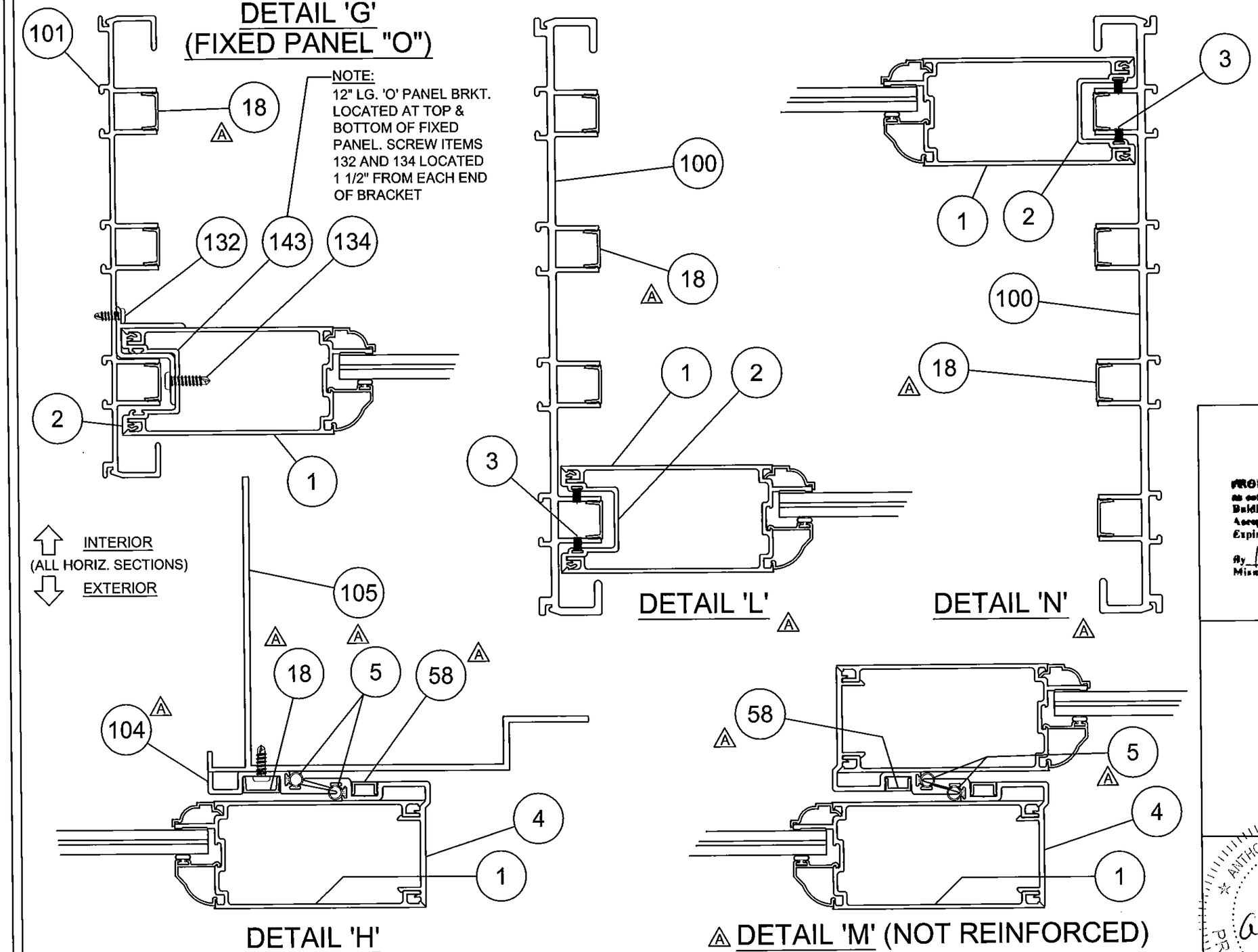

PRODUCT REVIEWED
as complying with the Florida Building Code
Acceptance No. 15-0609.12
Expiration Date 8/24/17
By
Miami Dade Product Control

ANTHONY LYNN MILLER
LICENSE
No. 58705
5/29/15
STATE OF FLORIDA
PROFESSIONAL ENGINEER

A. LYNN MILLER, P.E.
P.E.# 58705

Revsd By:	Date:	Revisions:	
J.R.	05/27/15	C	NO CHANGE THIS SHEET
J.J.	10/13/11	B	NO CHANGE THIS SHEET
F.K.	11/8/07	A	CORRECT ITEMS NUMBERS TO MATCH PARTS LIST. ADD DETAILS L & N, 4-TRACK DETAILS & UNREINFORCED DETAIL M (INTERL.)
Drawn By: F.K.	Date: 5/1/07	Checked By: J.J.	Date: XX/XX/07

1070 TECHNOLOGY DRIVE
NOKOMIS, FL 34275

P.O. BOX 1529
NOKOMIS, FL 34274

PGT
Visibly Better

Description: HORIZONTAL SECTION DETAILS

Title: ALUM. SLIDING GLASS DOOR, IMPACT

Series/Model:	Scale:	Sheet:	Drawing No.	Rev:
SGD780	1/2x	19 of 23	8100-11	C

SGD780 PANEL PARTS

ITEM	DWG #	PGT #	DESCRIPTION
1	8012	68012 B/W	PANEL STILE
2	8104	68104 B/W	STILE ADAPTER (FIXED AND LOCKING)
3	1644	61644G	WEATHERSTRIP, .270 X .187 WSTP 4PLY GREY
4	8102	68102C B/W	INTERLOCK ADAPTER (LEFT AND RIGHT)
5	7070	67070K	NEOPRENE BULB WEATHERSTRIP
11	8014A	68014A B/W	TOP RAIL / SMALL BOTTOM RAIL
12	8013B	68013A B/W	TALL BOTTOM RAIL
13	8103B	68103B B/W	SNAP RAIL ADAPTER
15	8105	68105 B/W	BACKER PLATE
18	8136	68136 B/W	SCREW COVER
19		7516X2LBOLTX	5/16" X 2" LAGBOLT, (STAINLESS)
19A	8197	48197N	LAGBOLT WASHER, NYLON
20		78X34PPTX410	#8X 3/4" PHIL PAN TEK SCREW 410 SS
21	1695	71695K	1 1/2"W X 1"L X 3/4"H FIN SEAL DUST PLUGS
22		710X115PPX	SCREW #10X 1 1/2" PHIL PAN SMS
24	8153N	78153N	TANDEM NYLON ROLLER ASSEMBLY
25	8153X	78153X	TANDEM STAINLESS STEEL ROLLER ASSEMBLY
26	8022	68022 (B/W)	INTERIOR BEAD
28	8145	68145 (B/W)	7/16 OR 9/16 LAMINATED BEAD (OGEE STYLE)
32	8146	68146 (B/W)	1 1/16 LAMINATED BEAD (OGEE STYLE)
40	8148	68148 (B/W)	9/16" SQUARE BEAD
42	8149	68149 (B/W)	1 1/16" IG SQUARE BEAD
44	8150	68150 (B/W)	7/16" SQUARE BEAD
46	1224	6TP247 (K)	VINYL GLAZING BULB
47	1643	61643K	FOAM FILLED NEOPRENE GLAZING BULB
48	1052	71052K	SETTING BLOCKS 1" X 3/4" X 1/16", LAMI
50	8047	78047K	SETTING BLOCKS 1" X 4" X 1/8", IG
51	8185	78185X	GEMINI LOCK W/ LONG TRIM PLATE
52	8184	78184X	GEMINI LOCK W/ POCKET TRIM PLATE
53		71032X1FPFX	10-32 X 1" LG FLATHEAD SS SCREW W/TYPE "F" TIP
54		7103239	10-32 STEEL ZINC U-NUT
55			DOW 899, 995 OR INSTANTGLAZE GLAZING SILICONE
58	8156	68156 B/W	INTERLOCK TRIM COVER
59	8175	48175 W/B	CORNER ASTRAGAL SEALS
60	8111	68111 B/W	CORNER RECEIVER ASTRAGAL
61	8110	68110 B/W	CORNER LOCK ASTRAGAL
62	8112	68112	CORNER BACKER PLATE
70	GLASS, 7/16 LAMI - OPTIONS 1,2,3,4,5 & 6		
71	GLASS, 9/16 LAMI - OPTIONS 7,8,9,10,11 & 12		
72	GLASS, 1 1/16 LAMI I.G. W/ 3/16 CAP & 7/16 LAMI - OPTIONS 13-18		
73	GLASS, 1 1/16 LAMI I.G. W/ 3/16 CAP & 9/16 LAMI - OPTIONS 19-24		
74	GLASS, 1 1/16 LAMI I.G. W/ 1/4 CAP & 7/16 LAMI - OPTIONS 25-30		
75	GLASS, 1 1/16 LAMI I.G. W/ 1/4 CAP & 9/16 LAMI - OPTIONS 31-36		

SGD780 DOOR FRAME PARTS

ITEM	DWG #	PGT #	DESCRIPTION
100	8132	68132W,B	4 TRACK JAMB
101	8133	68133W,B	3 TRACK JAMB
102	8134	68134W,B	2 TRACK JAMB
103	8135	68135W,B	2 TRACK JAMB W/ SCREEN TRACK
104	8108	68108 B/W	P-HOOK
105	8109	68109 B/W	P-HOOK MOUNT
106	8120	68120A	4T SILL ASSEMBLY
107	8116	68116A	3T SILL

SGD780 DOOR FRAME PARTS CONTINUED

ITEM	DWG #	PGT #	DESCRIPTION
108	8118	68118A	2T SILL
109	8115	68115A	MID SILL COVER
110	8117	68117A	INT-EXT SILL COVER
111	8121A	68121A W/B	4T SINGLE HEAD
112	8124A	68124A W/B	3T SINGLE HEAD
113	8127A	68127A W/B	2T SINGLE HEAD
114	8128A	68128A W/B	2T W/ SCRN SINGLE HEAD
115	8140	68140A	SILL RISER, 1 5/8"
116	8139	68139A	SILL RISER, 2 3/4"
117	8138	68138A	SILL RISER, 3 1/2"
118	8137	68137A	SILL RISER, 4 1/2
119	8182	68182A	SILL RISER, 5 1/4
120	8183	68183	SILL MOUNTING STRIP
121	8119	68119A	EXT SILL COVER WSCRN

SGD780 MISC. & KIT PARTS

ITEM	DWG #	PGT #	DESCRIPTION
125		781PQA	FRAME SCREW #8 X 1 TYPE A TWINFAST THREAD
126	1270	7PAD118	PAD, OPEN-CELL FOAM ADHESIVE (1/2 X 1 1/8)
127	1179	710X34PPSDAX	#10X 3/4" TEK TIP PHIL PAN SCREW
128	653	7SDKEEP	SCREEN LOCK KEEPER
129	727	41818K	SCREEN KEEPER SPACER SET
130	947	41722W,K,S	ROLLER ADJUSTMENT HOLE PLUG
131		72087K	BLACK BUMPER (FRAME JAMB)
132		76X38PPAX	#6 X 3/8" PHILLIPS PAN HEAD 18-8 SS
133		44432 W,B	COME A LONG
134	1155	781PQX	8 X 1" LONG COMBO SQ/PHIL SCREW 18-8 STST
135	1696	71696G	1 5/8" W X 3/4" L X 7/8" H FIN SEAL DUST PLUGS
141	4385	71164W,K,S	4 HOLE BUMPER STOP
142		78X38PPTX	#8 X 3/8" PAN PHILLIPS TEK SCREW
143	8188	68188	"O" PANEL BRACKET —12" LONG
148	8192	68192 M	INTERLOCK REINFORCEMENT
150	8157	78157K	HANDLE KIT IN-ACTIVE BLACK
151	8158	78158W	HANDLE KIT IN-ACTIVE SATIN WHITE
152	8159	78159SN	HANDLE KIT IN-ACTIVE SATIN NICKEL PVD
153	8177	78177B	HANDLE KIT IN-ACTIVE BRASS PVD
154	8160	78160K	HANDLE KIT ACTIVE NON-KEYED BLACK
155	8161	78161W	HANDLE KIT ACTIVE NON-KEYED SATIN WHITE
156	8162	78162SN	HANDLE KIT ACTIVE NON-KEYED SATIN NICKEL PVD
157	8178	78178B	HANDLE KIT ACTIVE NON-KEYED BRASS PVD
158	8163	78163K	HANDLE KIT ACTIVE KEYED BLACK
159	8164	78164W	HANDLE KIT ACTIVE KEYED SATIN WHITE
160	8165	78165SN	HANDLE KIT ACTIVE KEYED SATIN NICKEL PVD
161	8179	78179B	HANDLE KIT ACTIVE KEYED BRASS PVD
162	8166	78166WR	SECONDARY ACTUATOR KIT R.H. BLACK
163	8167	78167WR	SECONDARY ACTUATOR KIT R.H. SATIN WHITE
164	8168	78168SNR	SECONDARY ACTUATOR KIT R.H. SATIN NICKEL PVD
165	8180	78180B	SECONDARY ACTUATOR KIT R.H. BRASS PVD
166	8169	78169KL	SECONDARY ACTUATOR KIT L.H. BLACK
167	8170	78170WL	SECONDARY ACTUATOR KIT L.H. SATIN WHITE
168	8171	78171SNL	SECONDARY ACTUATOR KIT L.H. SATIN NICKEL PVD
169	8181	78181B	SECONDARY ACTUATOR KIT L.H. BRASS PVD
170	8186	78186X	1" KEEPER
171	8187	78187X	3/4" KEEPER

PRODUCT REVIEWED
as complying with the Florida
Building Code
Acceptance No. 15-0602.12
Expiration Date 8/2/17
By
Miami Dade Product Control

Revsd By:	Date:	Revisions:	
J.R.	05/27/15	C	NO CHANGE THIS SHEET
J.J.	10/13/11	B	NO CHANGE THIS SHEET
F.K.	11/8/07	A	ADD 4-TRACK FRAME, CORNER, SCREEN LOCK, SECONDARY ACTUATOR PARTS, GLASS TYPES & 2 3/4" SILL RISER. CORRECT P-HOOK ITEM NO.S
Drawn By: F.K.	Date: 5/1/07	Checked By: J.J.	Date: XX/XX/07

1070 TECHNOLOGY DRIVE
NOKOMIS, FL 34275

P.O. BOX 1529
NOKOMIS, FL 34274

PGT
Visibly Better

Description: PARTS LIST

Title: ALUM. SLIDING GLASS DOOR, IMPACT

Series/Model:	Scale:	Sheet:	Drawing No.	Rev:
SGD780	NTS	21 of 23	8100-11	C

ANTHONY LYNN MILLER
LICENSE
No. 58705
5/29/15
STATE OF FLORIDA
PROFESSIONAL ENGINEER

A. LYNN MILLER, P.E.
P.E.# 58705

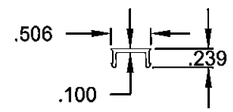

INTERLOCK TRIM COVER
(58) MAT'L: 6063-T6
DWG NO. 8156

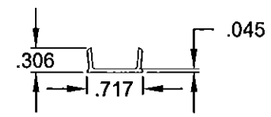

FRAME SCREW COVER
(18) MAT'L: 6063-T6
DWG NO. 8136

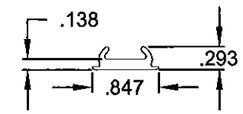

SILL MOUNTING STRIP
(120) MAT'L: 6063-T6
DWG NO. 8183

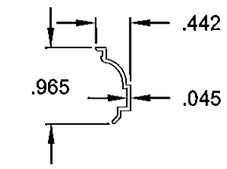

INTERIOR BEAD
(26) MAT'L: 6063-T5
DWG NO. 8022

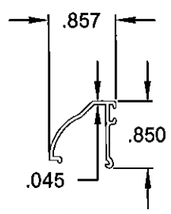

7/16" OG BEAD
(28) MAT'L: 6063-T5
DWG NO. 8023A

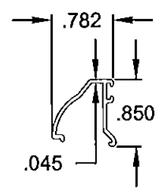

9/16" OG BEAD
(30) MAT'L: 6063-T5
DWG NO. 8145

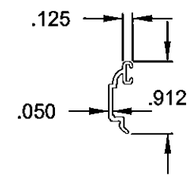

1 1/16" IG OG BEAD
(32) MAT'L: 6063-T5
DWG NO. 8146

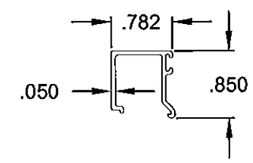

9/16" SQ BEAD
(40) MAT'L: 6063-T5
DWG NO. 8148

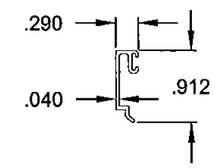

1 1/16" IG SQ BEAD
(42) MAT'L: 6063-T5
DWG NO. 8149

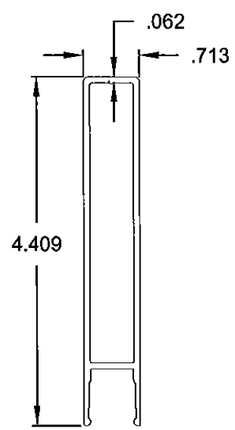

SILL RISER - 5 1/4"
(119) MAT'L: 6063-T6
DWG NO. 8182

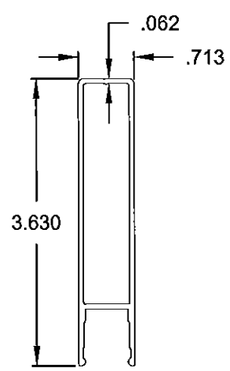

SILL RISER - 4 1/2"
(118) MAT'L: 6063-T6
DWG NO. 8137

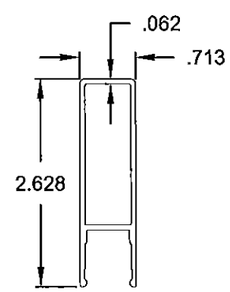

SILL RISER - 3 1/2"
(117) MAT'L: 6063-T6
DWG NO. 8138

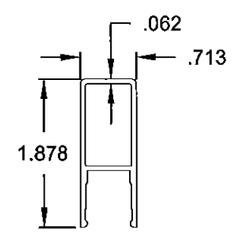

SILL RISER - 2 3/4"
(116) MAT'L: 6063-T6
DWG NO. 8138

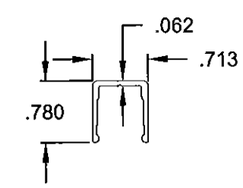

SILL RISER - 1 5/8"
(115) MAT'L: 6063-T6
DWG NO. 8140

PRODUCT REVISED
as complying with the Florida
Building Code
Acceptance No 15-0609.12
Expiration Date 8/2/17
By Ishag I. Chan
Miami Dade Product Control

Revsd By:	Date:	Revisions:	
J.R.	05/27/15	C	NO CHANGE THIS SHEET
J.J.	10/13/11	B	NO CHANGE THIS SHEET
F.K.	11/8/07	A	ADD ITEMS 30, 32, 40 & 116. CORRECT ITEM NUMBERS TO MATCH BOM
Drawn By: F.K.	Date: 5/1/07	Checked By: J.J.	Date: XX/XX/07

1070 TECHNOLOGY DRIVE
NOKOMIS, FL 34275

P.O. BOX 1529
NOKOMIS, FL 34274

PGT
Visibly Better

Description: EXTRUSIONS

Title: ALUM. SLIDING GLASS DOOR, IMPACT

Series/Model:	Scale:	Sheet:	Drawing No.	Rev:
SGD780	1/2x	22 of 23	8100-11	C

ANTHONY LYNN MILLER
LICENSE
No. 58705
STATE OF FLORIDA
PROFESSIONAL ENGINEER
5/29/15

A. LYNN MILLER, P.E.
P.E.# 58705

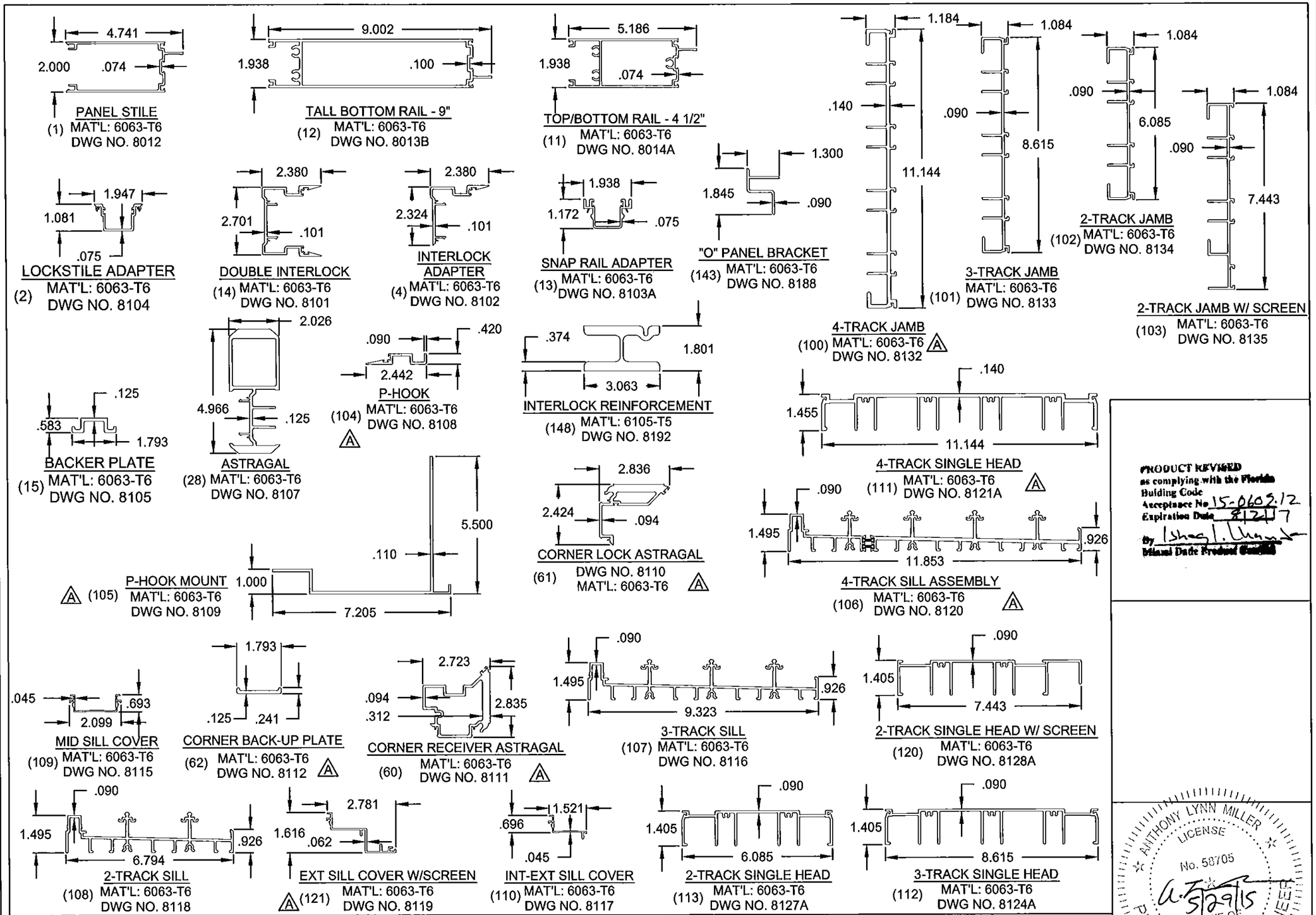

PRODUCT REVISED
as complying with the Florida
Building Code
Acceptance No. 15-0603.12
Expiration Date 8/2/17
By [signature]
Miami Dade Product Control

ANTHONY LYNN MILLER
LICENSE
No. 58705
STATE OF FLORIDA
PROFESSIONAL ENGINEER
5/29/15

A. LYNN MILLER, P.E.
P.E.# 58705

Revsd By:	Date:	Revisions:	
J.R.	05/27/15	C	NO CHANGE THIS SHEET
J.J.	10/13/11	B	NO CHANGE THIS SHEET
F.K.	11/8/07	A	ADD DETAILS 60-62, 100, 104, 105, 106 & 111, 4-T FRAME & CORNER PARTS
Drawn By: F.K.	Date: 5/1/07	Checked By: J.J.	Date: XX/XX/07

1070 TECHNOLOGY DRIVE
NOKOMIS, FL 34275

P.O. BOX 1529
NOKOMIS, FL 34274

PGT
Visibly Better

Description: EXTRUSIONS

Title: ALUM. SLIDING GLASS DOOR, IMPACT

Series/Model:	Scale:	Sheet:	Drawing No.	Rev:
SGD780	1/4x	23 of 23	8100-11	C