MIAMI-DADE COUNTY
PRODUCT CONTROL SECTION
11805 SW 26 Street, Room 208
Miami, Florida 33175-2474
T (786) 315-2590 F (786) 315-2599
www.miamidade.gov/economy

DEPARTMENT OF REGULATORY AND ECONOMIC RESOURCES (RER)
BOARD AND CODE ADMINISTRATION DIVISION

NOTICE OF ACCEPTANCE (NOA)

Loren Cook Company
2015 E. Dale Street
Springfield, MO 65803

SCOPE: This NOA is being issued under the applicable rules and regulations governing the use of construction materials. The documentation submitted has been reviewed and accepted by Miami-Dade County RER-Product Control Section to be used in Miami Dade County and other areas where allowed by the Authority Having Jurisdiction (AHJ).

This NOA shall not be valid after the expiration date stated below. The Miami-Dade County Product Control Section (In Miami Dade County) and/or the AHJ (in areas other than Miami Dade County) reserve the right to have this product or material tested for quality assurance purposes. If this product or material fails to perform in the accepted manner, the manufacturer will incur the expense of such testing and the AHJ may immediately revoke, modify, or suspend the use of such product or material within their jurisdiction. RER reserves the right to revoke this acceptance, if it is determined by Miami-Dade County Product Control Section that this product or material fails to meet the requirements of the applicable building code.

This product is approved as described herein, and has been designed to comply with the Florida Building Code, including the High Velocity Hurricane Zone.

DESCRIPTION: Model GI and GR Steel and Aluminum Rooftop Gravity Vents

APPROVAL DOCUMENT: Drawing No. **SD130708-02**, titled "GI/GR Gravity Ventilator Hurricane Rated Steel and Aluminum", sheets 1 through 10 of 10, dated 05/22/2014, prepared by Loren Cook Company, signed and sealed by Bradley F. Skidmore, P.E., bearing the Miami-Dade County Product Control revision stamp with the Notice of Acceptance number and expiration date by the Miami-Dade County Product Control Section.

MISSILE IMPACT RATING: None

LABELING: Each unit shall bear a permanent label with the manufacturer's name or logo, city, state, model/series, and following statement: "Miami-Dade County Product Control Approved", unless otherwise noted herein.

RENEWAL of this NOA shall be considered after a renewal application has been filed and there has been no change in the applicable building code negatively affecting the performance of this product.

TERMINATION of this NOA will occur after the expiration date or if there has been a revision or change in the materials, use, and/or manufacture of the product or process. Misuse of this NOA as an endorsement of any product, for sales, advertising or any other purposes shall automatically terminate this NOA. Failure to comply with any section of this NOA shall be cause for termination and removal of NOA.

ADVERTISEMENT: The NOA number preceded by the words Miami-Dade County, Florida, and followed by the expiration date may be displayed in advertising literature. If any portion of the NOA is displayed, then it shall be done in its entirety.

INSPECTION: A copy of this entire NOA shall be provided to the user by the manufacturer or its distributors and shall be available for inspection at the job site at the request of the Building Official.

This NOA **revises NOA # 13-1105.01** and consists of this page 1 and evidence page E-1, as well as approval document mentioned above.

The submitted documentation was reviewed by **Carlos M. Utrera, P.E.**

MIAMI-DADE COUNTY APPROVED

01/15/2016

NOTICE OF ACCEPTANCE: EVIDENCE SUBMITTED

A. DRAWINGS ***"Submitted under NOA # 13-1105.01"***

1. Drawing No. **SD130708-02**, titled "GI/GR Gravity Ventilator Hurricane Rated Steel and Aluminum", sheets 1 through 10 of 10, dated 05/22/2014, prepared by Loren Cook Company, signed and sealed by Bradley F. Skidmore, P.E.

B. TESTS ***"Submitted under NOA # 13-1105.01"***

1. Test reports on Uniform Static Air Pressure Test, Loading per FBC TAS 202-94 along with marked-up drawings and installation diagram of Series/Model GI Steel and Aluminum Gravity Ventilator, prepared by Architectural Testing, Inc., Test Report No. **C1438.01-801-18**, dated 07/05/2013, with revision 2 dated 05/15/2014, signed and sealed by Shawn G. Collins, P.E.

C. CALCULATIONS ***"Submitted under NOA # 13-1105.01"***

1. Wind load and anchor verification calculations, prepared by Loren Cook Company, dated 09/03/2013 and 02/03/2014, signed and sealed by Bradley F. Skidmore, P.E.

D. QUALITY ASSURANCE

1. Miami-Dade Department of Regulatory and Economic Resources (RER)

E. MATERIAL CERTIFICATIONS

1. None.

F. STATEMENTS

1. Statement letter of code conformance to 5th edition (2014) FBC issued by Loren Cook Company, dated 11/16/2015, signed and sealed by Bradley F. Skidmore, P.E.

"Submitted under NOA # 13-1105.01"

2. Statement letter of code conformance to 2010 FBC issued by Loren Cook Company, dated 10/29/2013, signed and sealed by Bradley F. Skidmore, P.E.
3. Statement letter of no financial interest issued by Loren Cook Company, dated 10/29/2013, signed and sealed by Bradley F. Skidmore, P.E.

Carlos M. Utrera, P.E.
Product Control Examiner
NOA No. 15-1013.02
Expiration Date: August 21, 2019
Approval Date: January 28, 2016

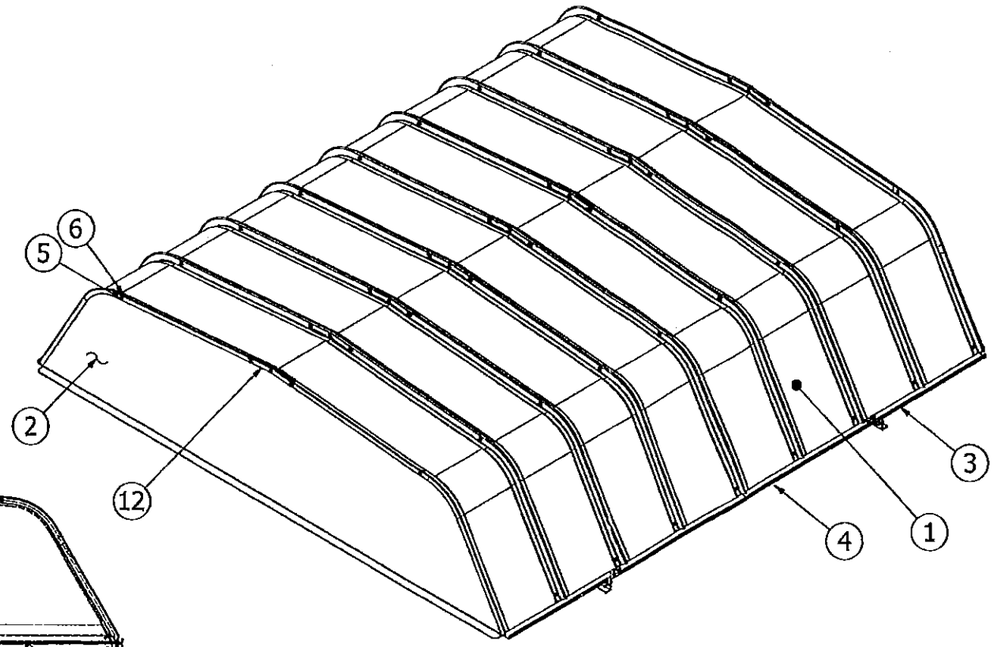

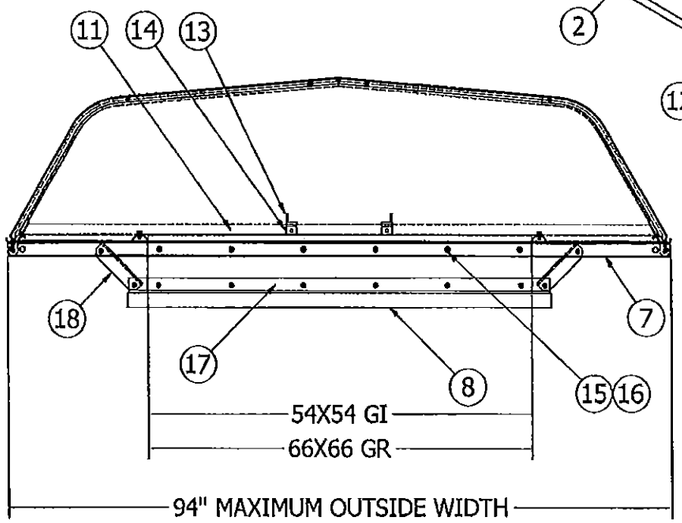

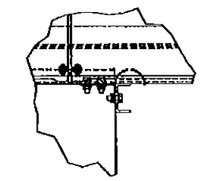

DETAIL A
SCALE 0.14 : 1

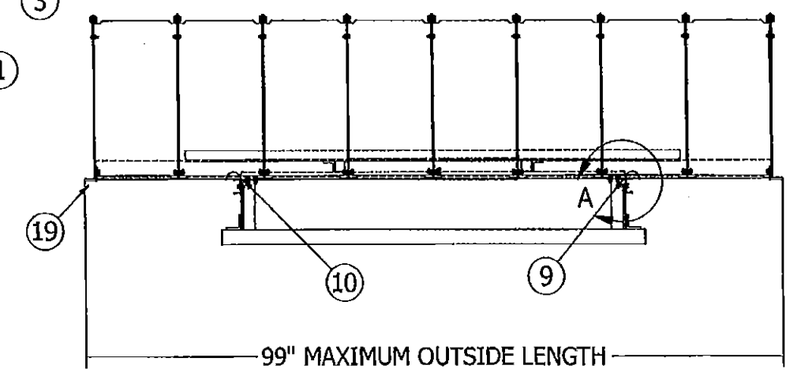

ITEM	QTY	SHEET NUMBER	DESCRIPTION
19	2	SHEET 6	END SUPPORT ANGLE
18	4	SHEET 10	HOOD SUPPORT ANGLE
17	2	SHEET 10	BASE SUPPORT ANGLE
16	22	---	5/16-18 WIZZNUT
15	22	---	5/16-18 x 3/4 WIZZLOCK BOLT
14	4	SHEET 7	BASE OPENING MOUNTING ANGLE (ALUM CONSTRUCTION ONLY)
13	2	SHEET 7	BASE OPENING ANGLE (ALUMINNUM CONSTRUCTION ONLY)
12	18	SHEET 7	STIFFENING BRACKET
11	2	SHEET 7	SUPPORT ANGLE WELDMENT
10	2	SHEET 9	RIGHT MOUNTING BRACKET
9	2	SHEET 9	LEFT MOUNTING BRACKET
8	2	SHEET 8	BASE WELDMENT
7	2	SHEET 7	MOUNTING CHANNEL
6	77	---	1/4-20 WIZZ NUT
5	77	---	1/4-20 X .75 WIZZ BOLT
4	2	SHEET 6	SECTION RAIL SPLICE
3	4	SHEET 6	SECTION RAIL
2	2	SHEET 6	GI/GR END PANEL
1	8	SHEET 5	GI/GR HOOD PANEL

PRODUCT REVISED
as complying with the Florida Building Code
Acceptance No 15-1013.02
Expiration Date 08/21/2019
By
Miami Dade Product Control

Approved as complying with the Florida Building Code
Date 02/21/2014
NOA# 13-1105.01
Miami Dade Product Control
By

NOTES:
DESIGN PRESSURE: +/- 90 PSF GALVANIZED STEEL CONSTRUCTION
+/- 90 PSF ALUMINUM CONSTRUCTION
ALL DIMENSIONS IN INCHES
DESIGN, TESTING AND ATTACHMENT CONFORMS TO FLORIDA BUILDING CODE
UNIT SIZED DETERMINED BY INSIDE THROAT DIMENSION
MAXIMUM SIZE: GI-54X54 (INTAKE) GR-66X66 (RELIEF)
MAXIMUM OUTSIDE HOOD DIMENSIONS 94X99
MAXIMUM UNIT WEIGHT: 630LBS (GALVANIZED STEEL) / 420LBS (ALUMINUM)

BRADLEY F. SKIDMORE
LICENSE
No. 74411
6/6/14
STATE OF FLORIDA
PROFESSIONAL ENGINEER
BRADLEY F SKIDMORE
FL PE LIC NO. 74411

MAT'L	–	
DRAWN	BFS	05/22/14
DESIGNER	BFS	SHEET 1 OF 10

DO NOT SCALE DRAWING
TOLERANCES UNLESS OTHERWISE NOTED

DECIMAL	FRACTIONAL
.XX=±.063"	≤12"=±1/16"
.XXX=±.010"	>12" THRU 96"=±1/8"
.XXXX=±.001"	>96" THRU 144"=±1/4"
ANGULAR ±2'	>144"=±3/8"
	(NC)=NO INSPECTION REQ'D

LOREN COOK CO.
MANUFACTURERS OF AIR MOVING EQUIPMENT
SPRINGFIELD, MISSOURI

GI/GR GRAVITY VENTILATOR
HURRICANE RATED
STEEL AND ALUMINUM

SIZE	DRAWING NO.	REV.
B	SD130708-02	C

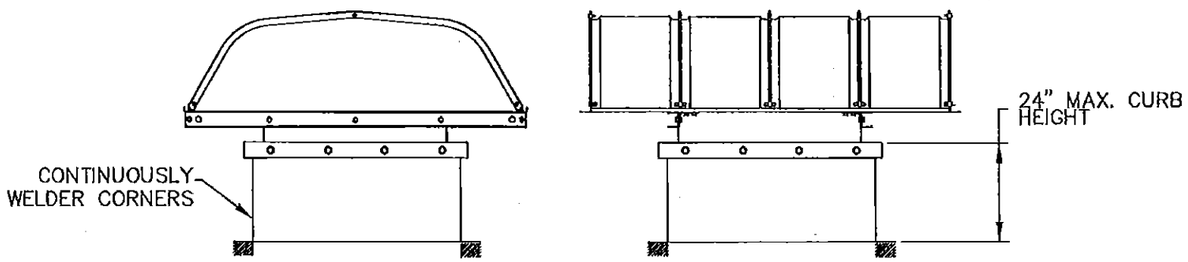

ATTACHMENT OF CURB TO ROOF STRUCTURE

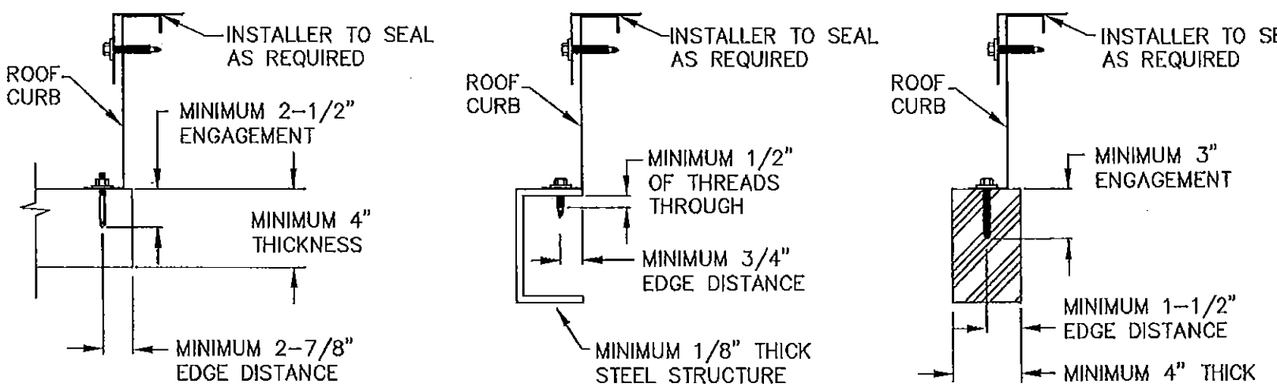

CONCRETE ROOF DECK	STEEL ROOF STRUCTURE	WOOD ROOF STRUCTURE
MINIMUM 2000PSI CONCRETE	A36 STEEL STRUCTURE MINIMUM Fy=36KSI	MIN. 4" NOMINAL THICK WOOD MIN SG = .42

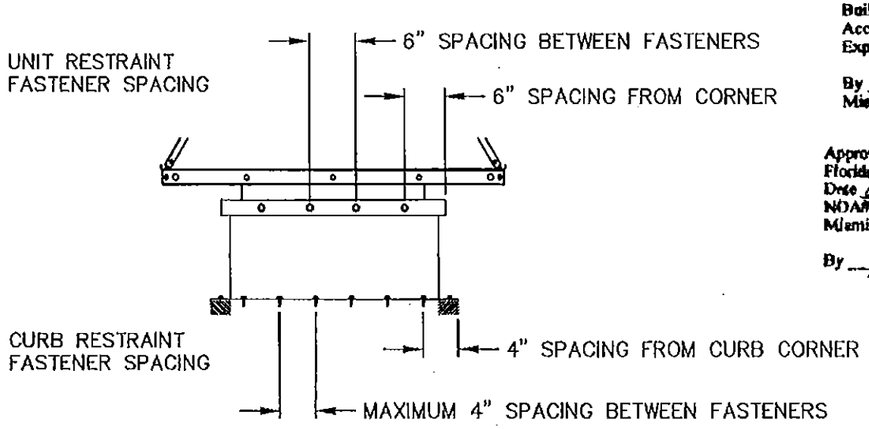

PRODUCT REVISED
as complying with the Florida Building Code
Acceptance No 15-1013.02
Expiration Date 08/21/2019
By
Miami Dade Product Control

Approved as complying with the Florida Building Code
Date 08/21/2014
NOA# 15-1013.01
Miami Dade Product Control
By

NOTES:

1) THE GI/GR GRAVITY VENTILATOR REFERRED TO HEREIN REFERS TO THE LOREN COOK MODEL GI WHICH IS NORMALLY USED FOR INTAKE VENTILATION AND THE MODEL GR WHICH IS NORMALLY USED FOR RELIEF VENTILATION. THE GI AND GR SIZES ARE DESIGNATED BY THE INSIDE THROAT DIMENSIONS WHICH SHALL NOT EXCEED 54"X54" FOR THE GI AND 66"X66" FOR THE GR AND MAY BE CONSTRUCTED FROM ALUMINUM OR GALVANIZED STEEL. THE OUTSIDE HOOD DIMENSIONS SHALL NOT EXCEED 94"X99".
2) THIS APPROVAL IS FOR THE STRUCTURAL CAPACITY OF THE EXTERIOR HOUSING ONLY, IT DOES NOT INCLUDE ANY INTERIOR MECHANISM OR ELECTRICAL PART.
3) THIS PRODUCT HAS NOT BEEN TESTED FOR IMPACT RESISTANCE.
4) THIS PRODUCT HAS NOT BEEN TESTED FOR WATER PENETRATION ACCORDING TO FLORIDA BUILDING CODE, TAS 100(A), WIND DRIVEN RAIN TEST. IT CANNOT BE INSTALLED WITHIN THE RIDGE AREA (FBC 1523.6.5.2.13)
5) UNIT IS TO INCLUDE A CURB CAP BASE TO FACILITATE MOUNTING OF THE UNIT TO A CURB. THE CURB WILL BE ADEQUATELY ATTACHED TO THE BUILDING STRUCTURE TO SUSTAIN ALL FORCES WHICH MAY BE PRODUCED BY THE PRESCRIBED ENVIROMENTAL FORCES EXERTED ON THE FAN AND CURB. THE CURB MUST BE ATTACHED TO A STRUCTURAL MEMBER OF THE BUILDING.

   CONCRETE DECK: CURB IS TO BE ATTACHED WITH WEDGE TYPE CONCRETE ANCHOR – MINIMUM 3/8" DIAMETER CARBON STEEL – HILTI KWIK BOLT 3 OR EQUAL. MINIMUM 2-1/2" OF ENGAGEMENT IN 2000 PSI MINIMUM CONCRETE. MINIMUM DECK THICKNESS IS 4".

   STEEL ROOF STRUCTURE: CURB IS TO BE ATTACHED WITH SELF-DRILLING STEEL SCREWS OF MINIMUM NOMINAL SIZE OF 1/4" DIAMETER AND SCREWS SHALL PASS THROUGH STEEL AT LEAST 1/2".

   WOOD ROOF STRUCTURE: CURB IS TO BE ATTACHED WITH STEEL LAG BOLTS NOMINAL SIZE OF 3/8" DIAMETER. WOOD IS TO BE 4" NOMINAL SIZE OR GREATER. THE BOLTS SHALL HAVE A MINIMUM OF 3" OF THREAD ENGAGEMENT.

6) THE ROOF CURB SHALL HAVE CONTINUOUSLY WELDED CORNERS AND SHALL BE CONSTRUCTED OF G-90 GALVANIZED STEEL OR 5052H-34 ALUMINUM OR STAINLESS STEEL. THE CURB MATERIAL THICKNESS SHALL BE 18 GA (.0470") OR GREATER AND HAVE MINIMUM 30 KSI YIELD STRENGTH. THE HEIGHT SHALL NOT EXCEED 24".
7) THE GR GRAVITY VENTILATOR SHALL BE ATTACHED TO THE CURB WITH ONE OF THE FOLLOWING METHODS INSTALLED ON ALL FOUR SIDES OF THE CURB CAP. THE FASTENERS SHALL BE 6" FROM EACH CORNER OF THE FAN BASE AND SPACED NO GREATER THAN 6" THEREAFTER.
   A) #12 X 2" HEX WASHER HEAD SELF-DRILLING SCREW
   B) ALTERNATE FASTENER – .25"DIA. HEX HEAD BOLT AND WASHER WITH COMPANION NUT INSTALLED ON THE INTERIOR OF THE CURB.
8) ALL FASTENERS ARE TO BE HIGH QUALITY CORROSION RESISTANT STEEL OR STAINLESS STEEL. ALL ALUMINUM SHALL BE PROTECTED FROM CONTACT WITH DISSIMILAR METALS PER FBC 2003.8.4. BY APPLYING BITUMUINOUS COATING OR RUBBERIZED GASKETS BETWEEN SURFACES WHEN INSTALLING VENTS.
9) ANY GAP BETWEEN THE CURB AND CURB CAP SHALL BE FILLED BY THE INSTALLING CONTRACTOR WITH A SUITABLE CORROSION RESISTANT MATERIAL THAT ALLOWS THE FASTENERS TO BE INSTALLED WITHOUT CAUSING EXCESSIVE DISTORTION OF THE UNIT FLANGES.
10) THE INSTALLER IS RESPONSIBLE FOR CHECKING THAT ALL FASTENERS ARE PROPERLY INSTALLED AND ALL ACCESS PANELS ARE IN PLACE BEFORE PUTTING THE UNIT INTO SERVICE.
11) ALL FASTENERS AND ACCESS PANELS MUST BE PROPERLY INSTALLED AFTER MAINTENANCE OPERATIONS FOR UNIT TO MAINTAIN CODE COMPLIANCE.

BRADLEY F. SKIDMORE
LICENSE
74411
STATE OF FLORIDA
PROFESSIONAL ENGINEER

BRADLEY F SKIDMORE
FL PE LIC NO. 74411

MAT'L	--	
DRAWN	BFS	05/22/14
DESIGNER	BFS	SHEET 2 OF 10

DO NOT SCALE DRAWING
TOLERANCES UNLESS OTHERWISE NOTED

DECIMAL	FRACTIONAL
.XX=±.063" .XXX=±.010" .XXXX=±.001"	≤12"=±1/16" >12" THRU 96"=±1/8" >96" THRU 144"=±1/4" >144"=±3/8"
ANGULAR ±2°	(NC)=NO INSPECTION REQ'D

LOREN COOK CO.®
MANUFACTURERS OF AIR MOVING EQUIPMENT
SPRINGFIELD, MISSOURI

GI/GR GRAVITY VENTILATOR
HURRICANE RATED
ALUMINUM AND STEEL

SIZE	DRAWING NO.	REV.
B	SD130708-02	C

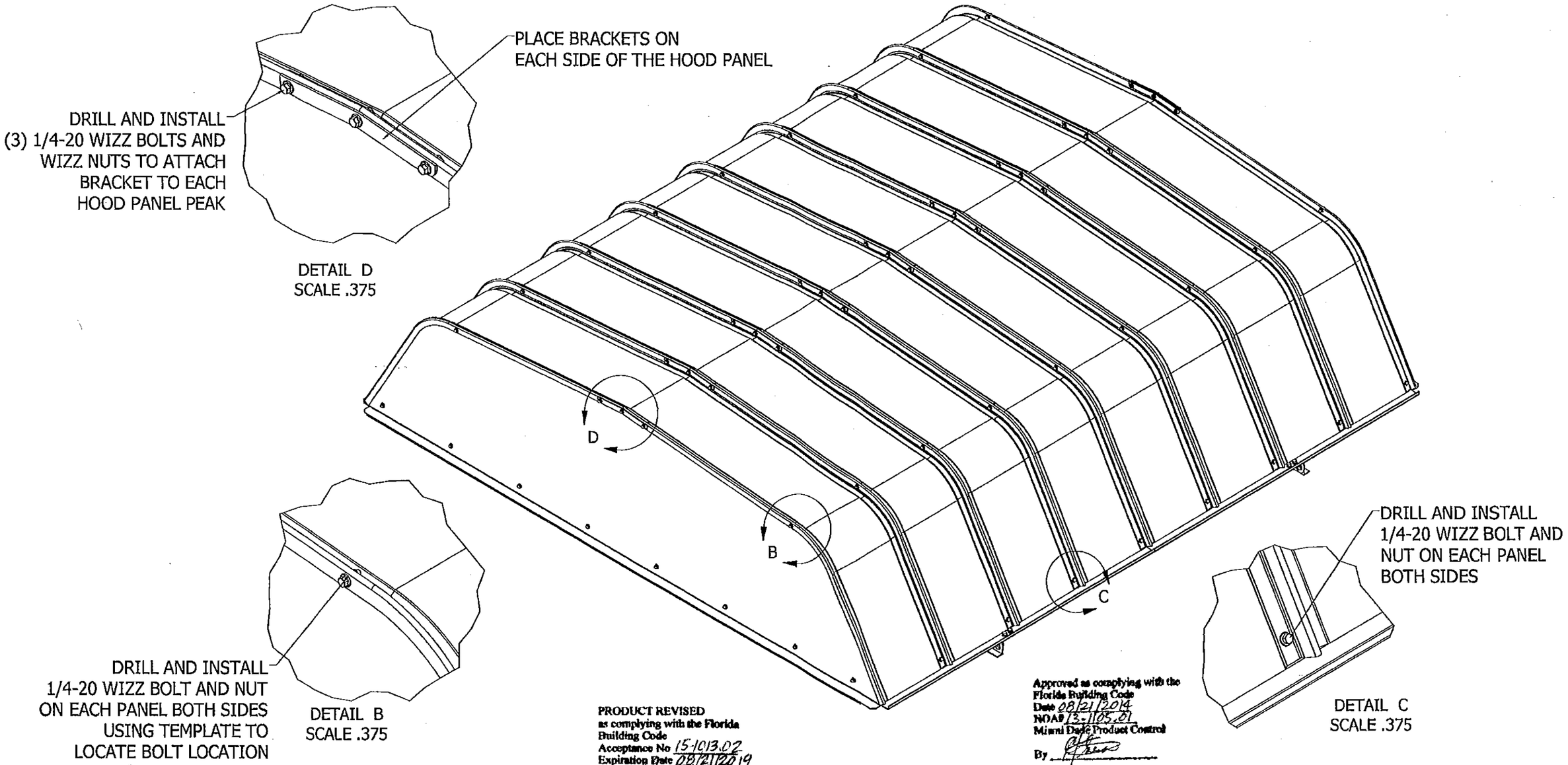

PRODUCT REVISED
as complying with the Florida
Building Code
Acceptance No 15-1013.02
Expiration Date 08/21/2019
By
Miami Dade Product Control

Approved as complying with the
Florida Building Code
Date 08/21/2014
NOA# 13-1105.01
Miami Dade Product Control
By

NOTES:

1. ATTACH BIRDSCREEN TO UNDERSIDE OF SECTION RAIL AND END PANEL

BRADLEY F. SKIDMORE
LICENSE
No. 74411
STATE OF FLORIDA
PROFESSIONAL ENGINEER

BRADLEY F SKIDMORE
FL PE LIC NO. 74411

MAT'L	–	
DRAWN	BFS	05/22/14
DESIGNER	BFS	SHEET 3 OF 10

DO NOT SCALE DRAWING
TOLERANCES UNLESS OTHERWISE NOTED

DECIMAL	FRACTIONAL
.XX=±.063"	≤12"=±1/16"
.XXX=±.010"	>12" THRU 96"=±1/8"
.XXXX=±.001"	>96" THRU 144"=±1/4"
	>144"=±3/8"
ANGULAR ±2'	(NC)=NO INSPECTION REQ'D

LOREN COOK CO.
MANUFACTURERS OF AIR MOVING EQUIPMENT
SPRINGFIELD, MISSOURI

GI/GR GRAVITY VENTILATOR
HURRICANE RATED
STEEL AND ALUMINUM

SIZE	DRAWING NO.	REV.
B	SD130708-02	C

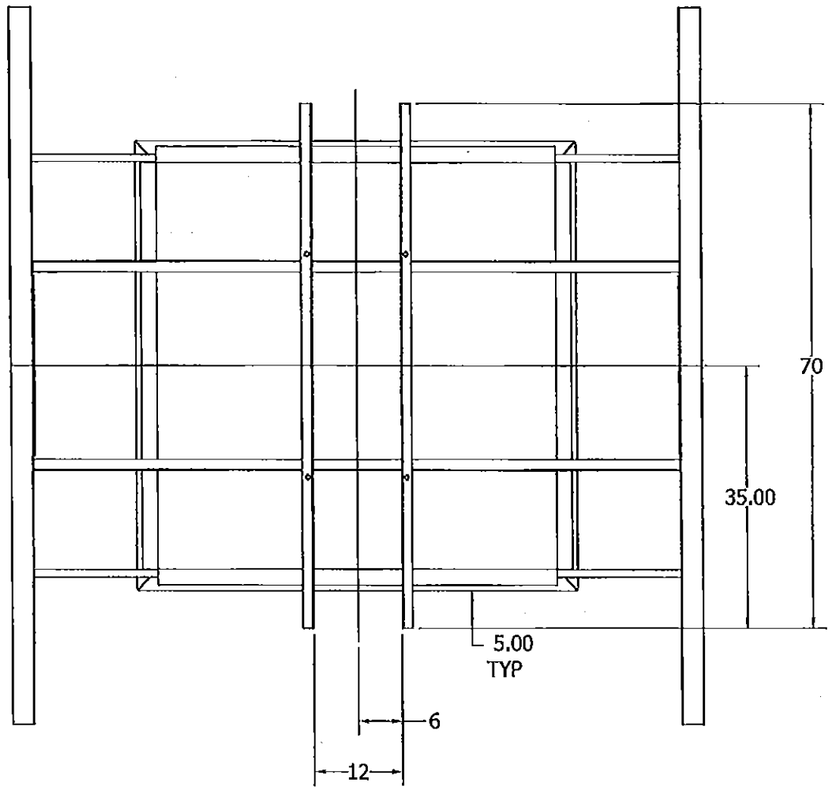

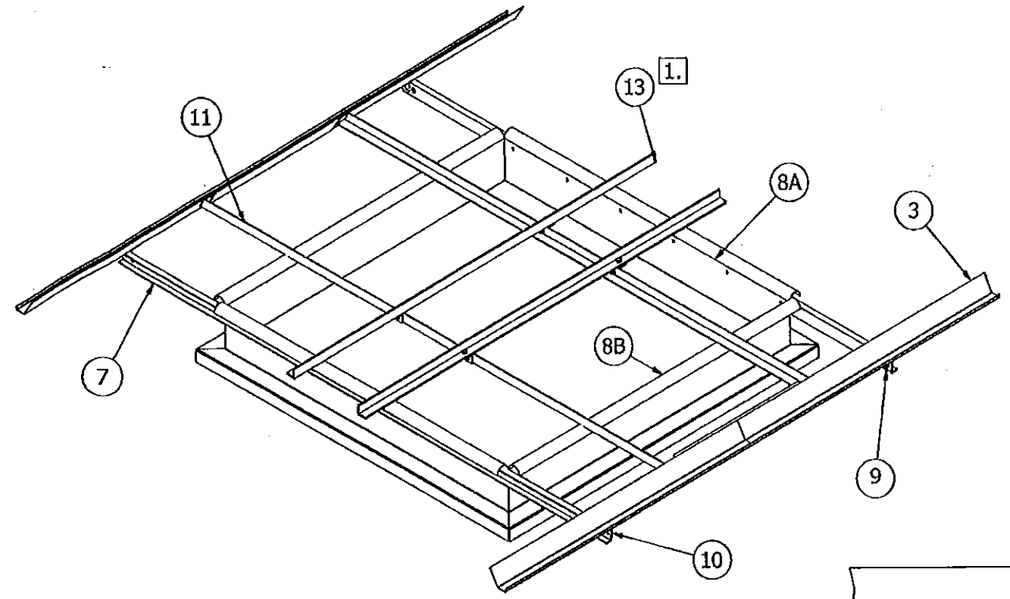

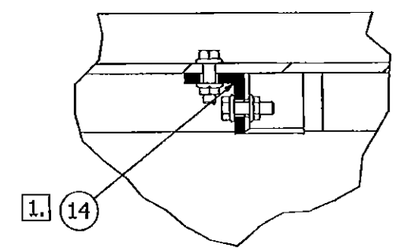

DETAIL E
SCALE 0.375 : 1

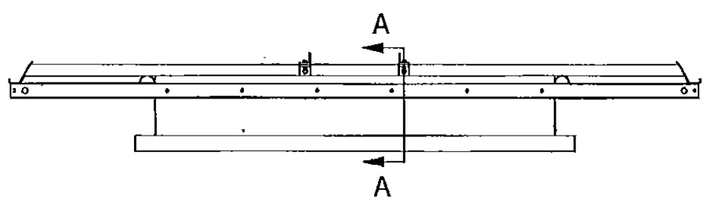

SECTION A-A
SCALE 0.07 : 1

NOTES:
1. ITEMS 13 AND 14 FOR ALUMINUM HURRICANE CONSTRUCTION ONLY NOT REQUIRED FOR GALVANIZED HURRICANE CONSTRUCTION

ITEM	QTY	SHEET NO.	DESCRIPTION
14	4	SHEET 7	BASE OPENING MOUNTING ANGLE (REQUIRED ON ALUMINUM UNITS ONLY)
13	2	SHEET 7	BASE OPENING ANGLE (REQUIRED ON ALUMINUM UNITS ONLY)
11	2	SHEET 7	SUPPORT ANGLE WELDMENT
10	2	SHEET 9	RIGHT MOUNTING BRACKET
9	2	SHEET 9	LEFT MOUNTING BRACKET
8	1	SHEET 8	BASE WELDMENT
7	2	SHEET 7	MOUNTING CHANNEL
3	4	SHEET 6	SECTION RAIL

PRODUCT REVISED
as complying with the Florida Building Code
Acceptance No 15-10.3.02
Expiration Date 08/27/2019
By
Miami Dade Product Control

Approved as complying with the Florida Building Code
Date 08/21/2014
NOA# 13-1105.01
Miami Dade Product Control
By

BRADLEY F. SKIDMORE
LICENSE
No. 74411
STATE OF FLORIDA
PROFESSIONAL ENGINEER

BRADLEY F SKIDMORE
FL PE LIC NO. 74411

MAT'L	--	
DRAWN	BFS	05/22/14
DESIGNER	BFS	SHEET 4 OF 10

DO NOT SCALE DRAWING
TOLERANCES UNLESS OTHERWISE NOTED

DECIMAL	FRACTIONAL
.XX=±.063"	≤12"=±1/16"
.XXX=±.010"	>12" THRU 96"=±1/8"
.XXXX=±.001"	>96" THRU 144"=±1/4"
ANGULAR ±2°	>144"=±3/8"
	(NC)=NO INSPECTION REQ'D

LOREN COOK CO.
MANUFACTURERS OF AIR MOVING EQUIPMENT
SPRINGFIELD, MISSOURI

GI/GR GRAVITY VENTILATOR
HURRICANE RATED
STEEL AND ALUMINUM

SIZE	DRAWING NO.	REV.
B	SD130708-02	C

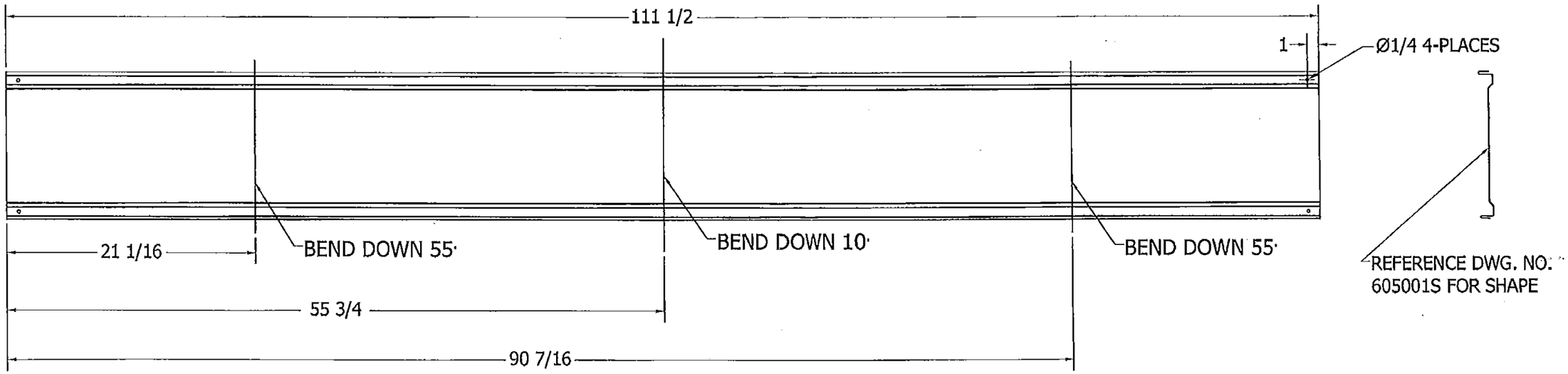

HOOD PANEL

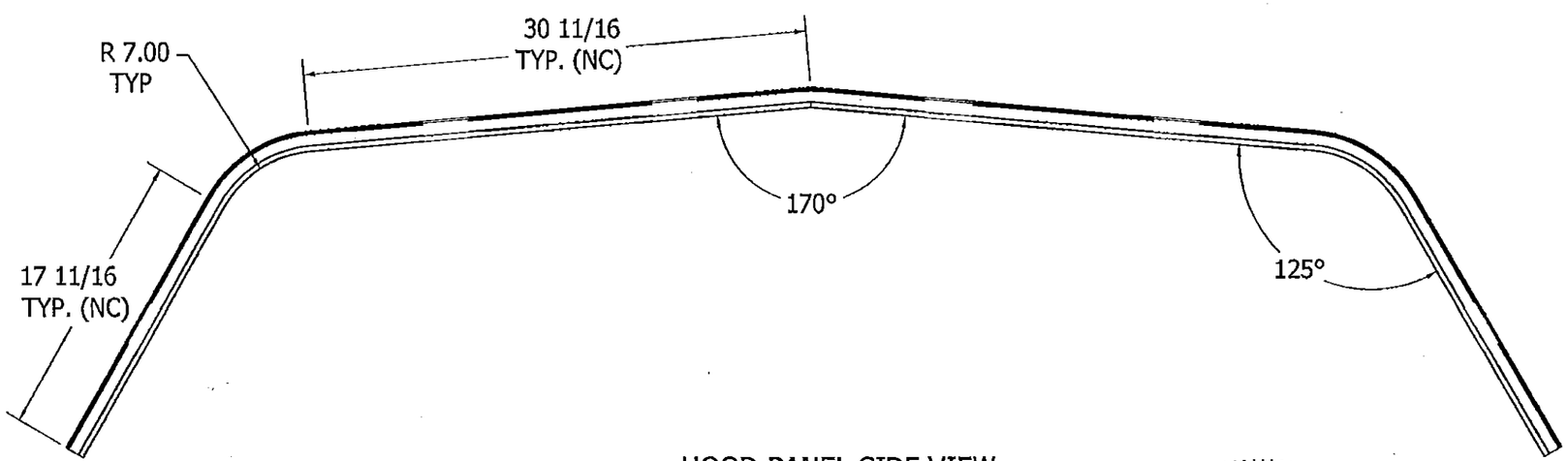

HOOD PANEL SIDE VIEW

PRODUCT REVISED
as complying with the Florida Building Code
Acceptance No 15-1013.02
Expiration Date 08/21/2019
By
Miami Dade Product Control

Approved as complying with the Florida Building Code
Date 08/21/2014
NOA# 13-1105.01
Miami Dade Product Control
By

NOTES:
8 HOOD PANELS REQUIRED PER UNIT
MATERIAL: 20 GA G-90 GALVANIZED STEEL: Sy=30 KSI MINIMUM
ALTERNATE CONSTRUCTION: .040 3003 H-14 ALUMINUM: Sy=17 KSI MINIMUM

BRADLEY F. SKIDMORE
LICENSED
No. 74411
6/16/14
STATE OF FLORIDA
PROFESSIONAL ENGINEER
BRADLEY F. SKIDMORE
FL PE LIC NO. 74411

MAT'L	–	
DRAWN	BFS	05/22/14
DESIGNER	BFS	SHEET 5 OF 10

DO NOT SCALE DRAWING
TOLERANCES UNLESS OTHERWISE NOTED

DECIMAL	FRACTIONAL
.XX=±.063"	≤12"=±1/16"
.XXX=±.010"	>12" THRU 96"=±1/8"
.XXXX=±.001"	>96" THRU 144"=±1/4"
ANGULAR ±2'	>144"=±3/8"
	(NC)=NO INSPECTION REQ'D

LOREN COOK CO.
MANUFACTURERS OF AIR MOVING EQUIPMENT
SPRINGFIELD, MISSOURI

GI/GR GRAVITY VENTILATOR
HURRICANE RATED
STEEL AND ALUMINUM

SIZE	DRAWING NO.	REV.
B	SD130708-02	C

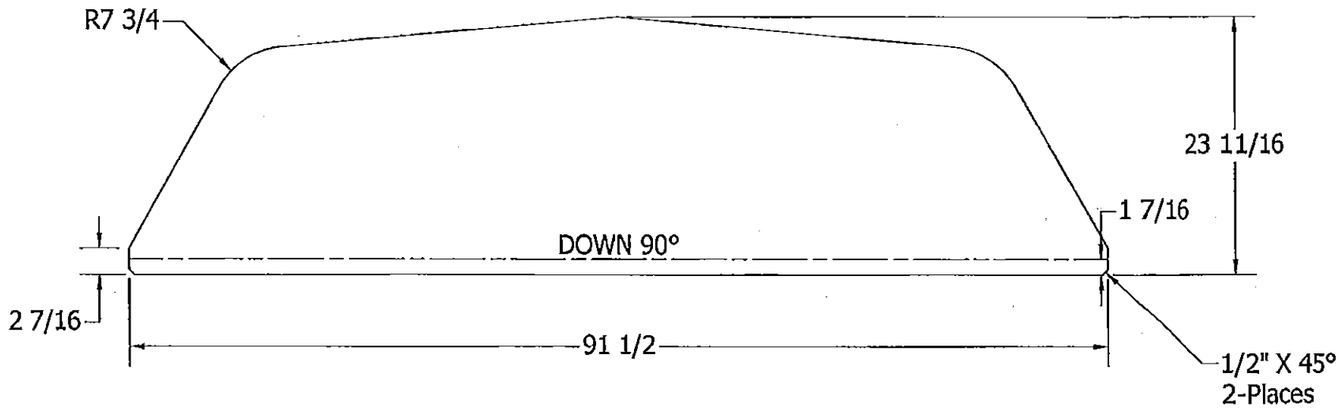

HOOD END PANEL

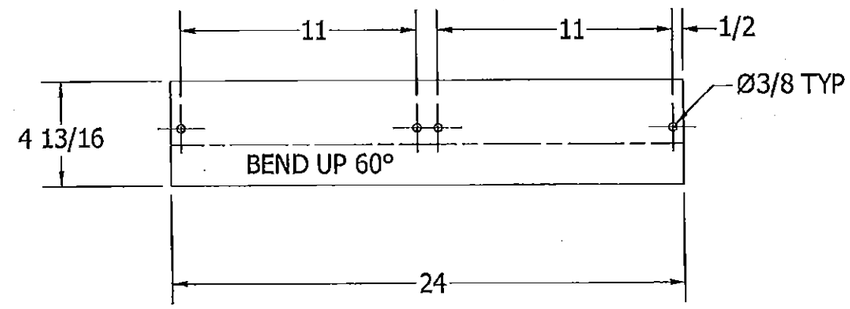

SECTION RAIL SPLICE

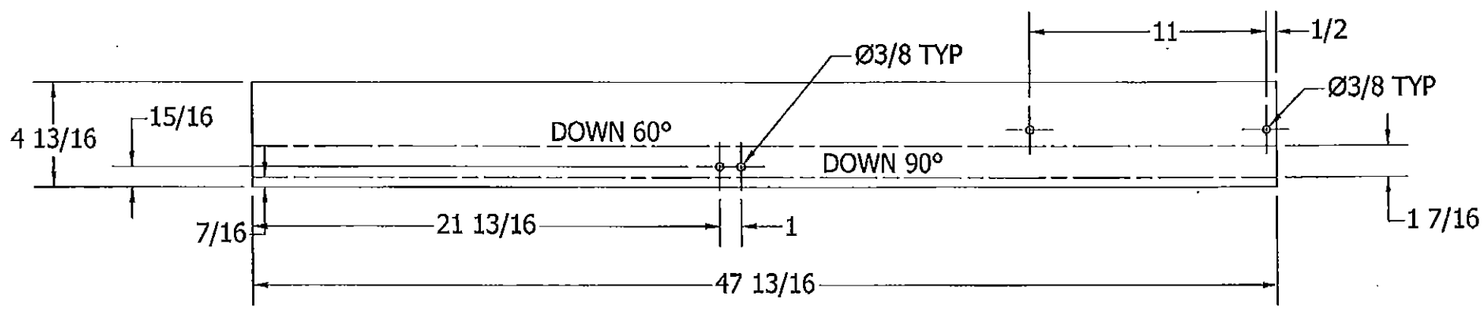

SECTION RAIL

BEND 2 AS SHOWN, BEND 2 OPPOSITE

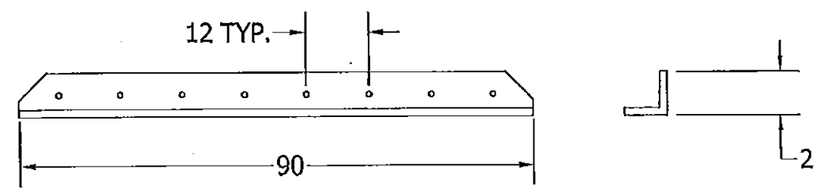

END SUPPORT ANGLE

PRODUCT REVISED
as complying with the Florida Building Code
Acceptance No 15-1013.02
Expiration Date 08/21/2019
By
Miami Dade Product Control

Approved as complying with the Florida Building Code
Date 08/21/2014
NOA# 13-1105.01
Miami Dade Product Control
By

NOTES:

1) G90 GALVANIZED STEEL: Sy=30 KSI MINIMUM
2) A36 STEEL: Sy=36 KSI MINIMUM
3) 6005-T5 ALUMINUM: Sy=35 KSI MINIMUM
4) 3003H-14 ALUMINUM SHEET: Sy=17 KSI MINIMUM

ITEM	DESCRIPTION	QTY	MATERIAL
19	END SUPPORT ANGLE (2x2x1/4)	2	A36 STEEL-PAINTED / 6005-T5 ALUMINUM
4	SECTION RAIL SPLICE	2	16 GA G90 GALV STEEL /.100 ALUMINUM(NOTE4)
3	SECTION RAIL	4	16 GA G90 GALV STEEL /.100 ALUMINUM(NOTE4)
2	HOOD END PANEL	2	18 GA G90 GALV STEEL / .063 ALUMINUM(NOTE4)

BRADLEY F. SKIDMORE
LICENSE
No. 74411
6/6/14
STATE OF FLORIDA
PROFESSIONAL ENGINEER

BRADLEY F SKIDMORE
FL PE LIC NO. 74411

MAT'L	SEE TABLE	
DRAWN	BFS	05/22/14
DESIGNER	BFS	SHEET 6 OF 10

DO NOT SCALE DRAWING
TOLERANCES UNLESS OTHERWISE NOTED

DECIMAL	FRACTIONAL
.XX=±.063"	≤12"=±1/16"
.XXX=±.010"	>12" THRU 96"=±1/8"
.XXXX=±.001"	>96" THRU 144"=±1/4"
ANGULAR ±2'	>144"=±3/8"
	(NC)=NO INSPECTION REQ'D

LOREN COOK CO.
MANUFACTURERS OF AIR MOVING EQUIPMENT
SPRINGFIELD, MISSOURI

GI/GR GRAVITY VENTILATOR
HURRICANE RATED
STEEL AND ALUMINUM

SIZE	DRAWING NO.	REV.
B	SD130708-02	C

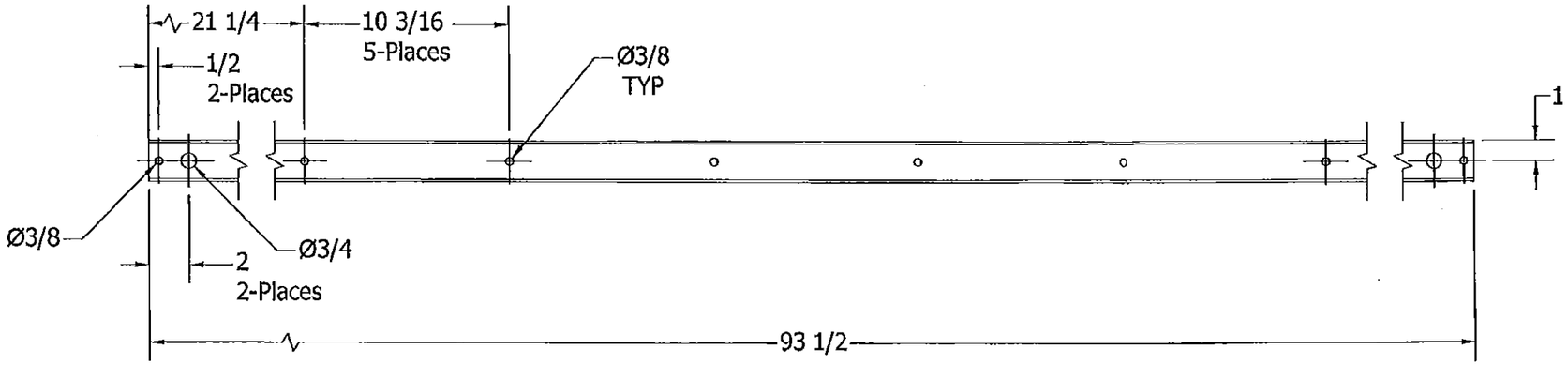

MOUNTING CHANNEL

STIFFENING BRACKET

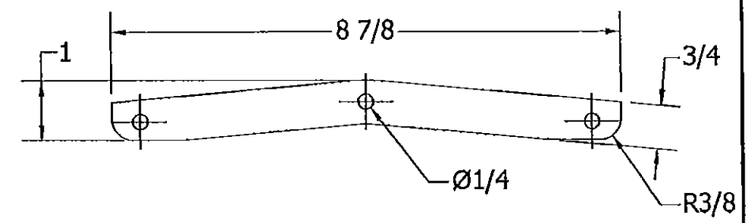

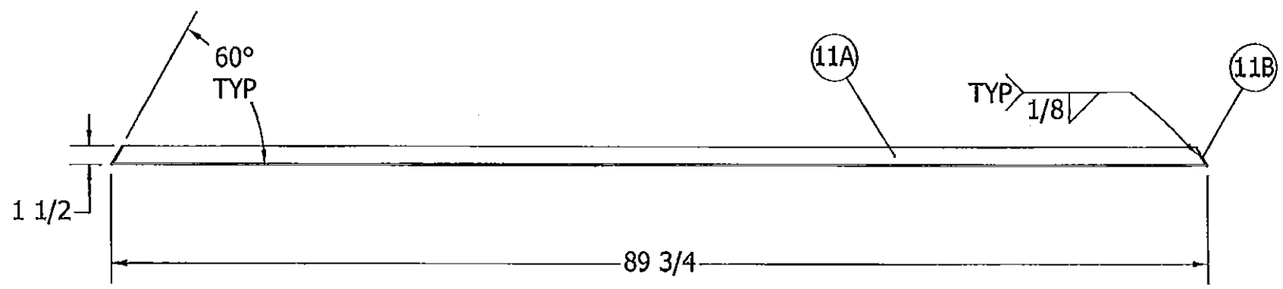

SUPPORT ANGLE WELDMENT

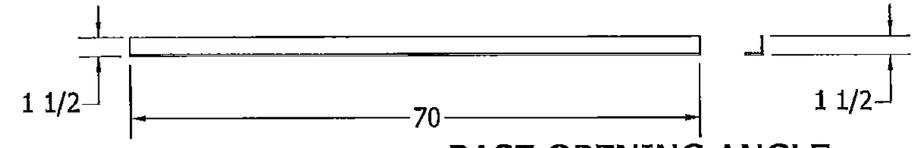

BASE OPENING ANGLE

NOTES:
1) G90 GALVANIZED STEEL: Sy=30KSI MINIMUM
2) A36 STEEL: Sy=36KSI MINIMUM
3) 6005-T5 ALUMINUM: Sy=35KSI MINIMUM
4) 3003H-14 ALUMINUM SHEET: Sy=17KSI MINIMUM

PRODUCT REVISED
as complying with the Florida Building Code
Acceptance No 15-1013.02
Expiration Date 05/21/2019
By
Miami Dade Product Control

Approved as complying with the Florida Building Code
Date 08/21/2014
NOA# 13-1105.01
Miami Dade Product Control
By

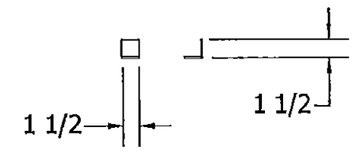

BASE OPENING MOUNTING ANGLE

ITEM	DESCRIPTION	QTY	MATERIAL
14	BASE OPENING MOUNTING ANGLE	4	1-1/2 X 1-1/2 X 1/8 ALUM ANGLE (NOTE3)
13	BASE OPENING ANGLE	2	1-1/2 X 1-1/2 X 1/8 ALUM ANGLE (NOTE3)
12	STIFFENING BRACKET	18	12 GA G-90 GALV. STEEL(NOTE1)
11B	END CAP	4	1 1/2 X 1 3/4 X 12 GA (NOTE1) OR 1 1/2 X 1 3/4 X 1/8" ALUMINUM(NOTE4)
11A	SUPPORT ANGLE	2	1 1/2 X 1 1/2 X 12 GA (NOTE1) OR 1 1/2X1 1/2 X 1/8" ALUMINUM(NOTE3)
11	SUPPORT ANGLE WELDMENT	(2)	(SEE PARTS ABOVE)
7	MOUNTING CHANNEL	2	2 X 1 X 12GA (NOTE1) / 2 X 1 X .130 ALUMINUM (NOTE3)

BRADLEY F. SKIDMORE
LICENSE
No. 74411
6/6/14
STATE OF FLORIDA
PROFESSIONAL ENGINEER

BRADLEY F SKIDMORE
FL PE LIC NO. 74411

MAT'L	SEE NOTES	
DRAWN	BFS	05/22/14
DESIGNER	BFS	SHEET 7 OF 10

DO NOT SCALE DRAWING
TOLERANCES UNLESS OTHERWISE NOTED

DECIMAL	FRACTIONAL
.XX=±.063"	≤12"=±1/16"
.XXX=±.010"	>12" THRU 96"=±1/8"
.XXXX=±.001"	>96" THRU 144"=±1/4"
ANGULAR ±2°	>144"=±3/8"
	(NC)=NO INSPECTION REQ'D

LOREN COOK CO.
MANUFACTURERS OF AIR MOVING EQUIPMENT
SPRINGFIELD, MISSOURI

GI/GR GRAVITY VENTILATOR
HURRICANE RATED
STEEL AND ALUMINUM

SIZE	DRAWING NO.	REV.
B	SD130708-02	C

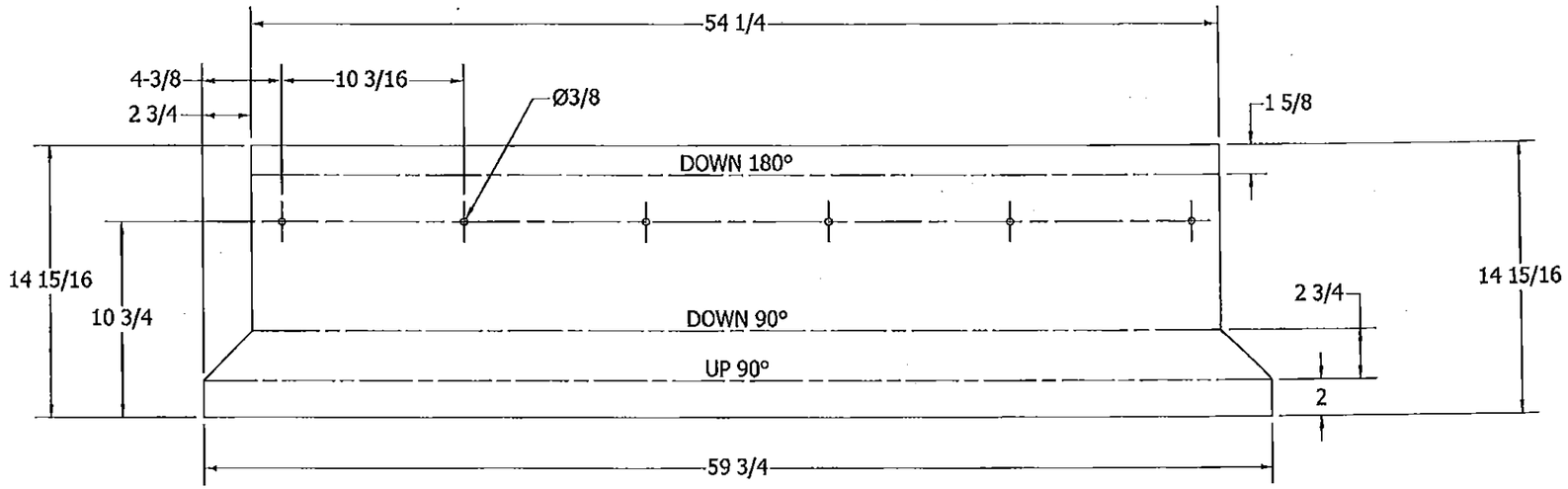

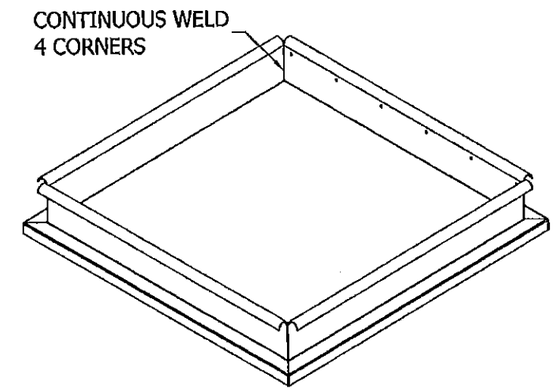

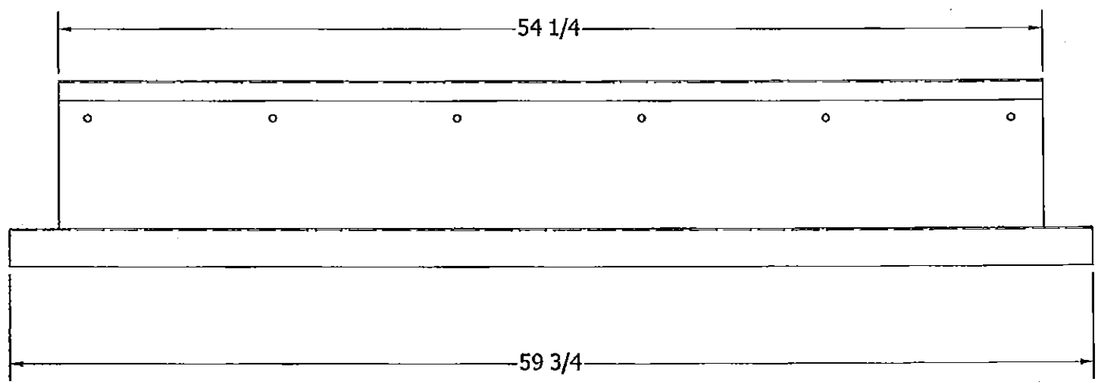

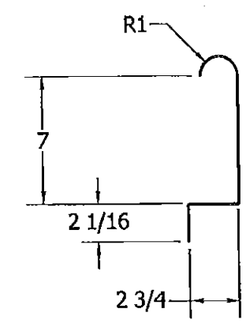

BASE PANEL
*PUNCH HOLES IN TWO PARTS ONLY

PRODUCT REVISED
as complying with the Florida
Building Code
Acceptance No 15-1013.02
Expiration Date 08/21/2019
By
Miami Dade Product Control

Approved as complying with the
Florida Building Code
Date 08/21/2014
NOA# 13-1105.01
Miami Dade Product Control
By

NOTES:
MATERIAL: 16 GA. G-90 GALANIZED STEEL Sy=30KSI MINIMUM
ALTERNATE MATERIAL: .080 3003 H-14 ALUMINUM Sy=17KSI MINIMUM

8A	2	BASE PANEL WITH HOLES	SEE NOTES
8B	2	BASE PANEL WITHOUT HOLES	SEE NOTES
ITEM	QTY	DESCRIPTION	MATERIAL

BRADLEY F. SKIDMORE
LICENSE
No. 74411
STATE OF FLORIDA
PROFESSIONAL ENGINEER

BRADLEY F SKIDMORE
FL PE LIC NO. 74411

MAT'L	SEE NOTES	
DRAWN	BFS	05/22/14
DESIGNER	BFS	SHEET 8 OF 10

DO NOT SCALE DRAWING
TOLERANCES UNLESS OTHERWISE NOTED

DECIMAL	FRACTIONAL
.XX=±.063"	≤12"=±1/16"
.XXX=±.010"	>12" THRU 96"=±1/8"
.XXXX=±.001"	>96" THRU 144"=±1/4"
ANGULAR ±2°	>144"=±3/8"
	(NC)=NO INSPECTION REQ'D

LOREN COOK CO.
MANUFACTURERS OF AIR MOVING EQUIPMENT
SPRINGFIELD, MISSOURI

GI/GR GRAVITY VENTILATOR
HURRICANE RATED
STEEL AND ALUMINUM

SIZE	DRAWING NO.	REV.
B	SD130708-02	C

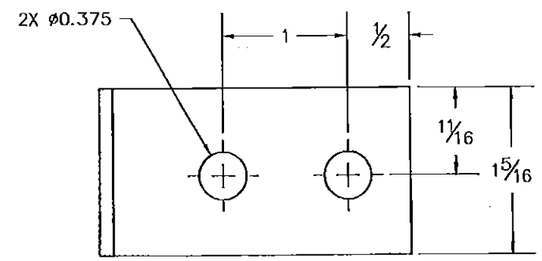

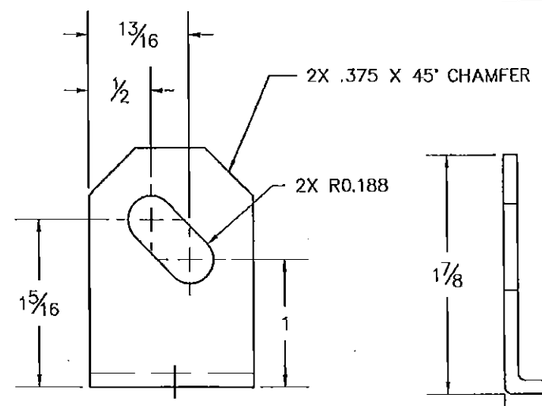

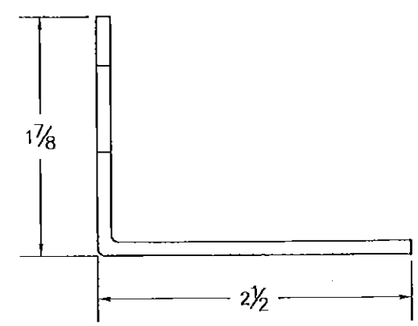

PRODUCT REVISED
as complying with the Florida
Building Code
Acceptance No 15-1013.02
Expiration Date 08/21/2019
By
Miami Dade Product Control

Approved as complying with the
Florida Building Code
Date 08/21/2014
NOA# 13-1105.01
Miami Dade Product Control
By

NOTES:
1) G90 GALVALIZED STEEL: Sy=30KSI MINIMUM

ITEM	QTY	DESCRIPTION	MATERIAL
10	2	RIGHT MOUNTING BRACKET (FORM OPPOSITE)	12GA. G90 GALV. STEEL
9	2	LEFT MOUNTING BRACKET (AS SHOWN)	12GA. G90 GALV. STEEL

BRADLEY F. SKIDMORE
LICENSE
No. 74411
6/6/14
STATE OF FLORIDA
PROFESSIONAL ENGINEER

BRADLEY F SKIDMORE
FL. PE LIC NO. 74411

MAT'L	SEE TABLE	
DRAWN	BFS	05/22/14
DESIGNER	BFS	SHEET 9 OF 10

DO NOT SCALE DRAWING
TOLERANCES UNLESS OTHERWISE NOTED

DECIMAL	FRACTIONAL
.XX=±.063"	≤12"=±1/16"
.XXX=±.010"	>12" THRU 96"=±1/8"
.XXXX=±.001"	>96" THRU 144"=±1/4"
ANGULAR ±2°	>144"=±3/8"
	(NC)=NO INSPECTION REQ'D

LOREN COOK CO.
MANUFACTURERS OF AIR MOVING EQUIPMENT
SPRINGFIELD, MISSOURI

GI/GR GRAVITY VENTILATOR
HURRICANE RATED
STEEL AND ALUMINUM

SIZE	DRAWING NO.	REV.
B	SD130708-02	C

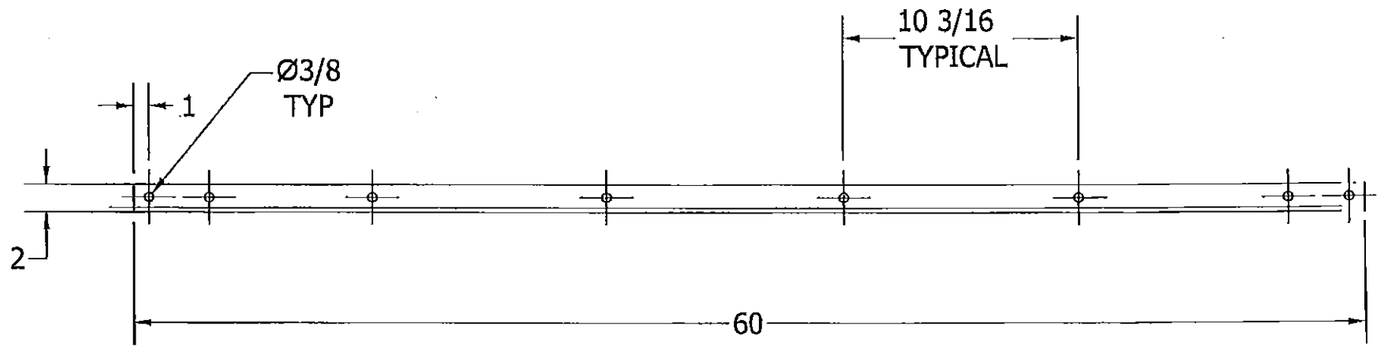

BASE SUPPORT ANGLE

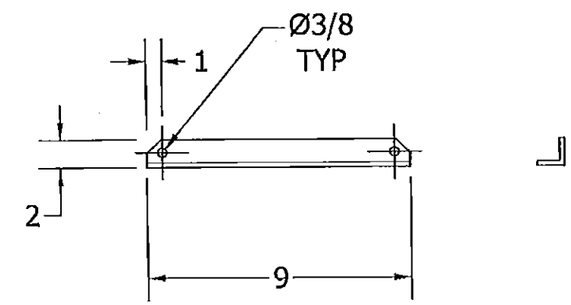

HOOD SUPPORT ANGLE

NOTES:
1) A36 STEEL: Sy=36KSI MINIMUM
2) 6005-T5 ALUMINUM: Sy=35KSI MINIMUM

ITEM	DESCRIPTION	QTY	MATERIAL
18	HOOD SUPPORT ANGLE	4	2 X 2 X 1/4 A36 (NOTE1) OR 2 X 2 X 1/4 ALUMINUM (NOTE2)
17	BASE SUPPORT ANGLE	2	2 X 2 X 1/4 A36 (NOTE1) OR 2 X 2 X 1/4 ALUMINUM (NOTE2)

BRADLEY F. SKIDMORE
LICENSE
No. 74411
STATE OF FLORIDA
PROFESSIONAL ENGINEER

BRADLEY F SKIDMORE
FL PE LIC NO. 74411

PRODUCT REVISED
as complying with the Florida
Building Code
Acceptance No 15-1013.02
Expiration Date 08/21/2019
By
Miami Dade Product Control

Approved as complying with the
Florida Building Code
Date 08/21/2014
NOA# 12-1105.01
Miami Dade Product Control
By

MAT'L	SEE NOTES	
DRAWN	BFS	05/22/14
DESIGNER	BFS	SHEET 10 OF 10

DO NOT SCALE DRAWING
TOLERANCES UNLESS OTHERWISE NOTED

DECIMAL	FRACTIONAL
.XX=±.063" .XXX=±.010" .XXXX=±.001"	≤12"=±1/16" >12" THRU 96"=±1/8" >96" THRU 144"=±1/4" >144"=±3/8"
ANGULAR ±2°	(NC)=NO INSPECTION REQ'D

LOREN COOK CO.
MANUFACTURERS OF AIR MOVING EQUIPMENT
SPRINGFIELD, MISSOURI

GI/GR GRAVITY VENTILATOR
HURRICANE RATED
STEEL AND ALUMINUM

SIZE	DRAWING NO.	REV.
B	SD130708-02	C