MIAMI-DADE COUNTY

DEPARTMENT OF REGULATORY AND ECONOMIC RESOURCES (RER)
BOARD AND CODE ADMINISTRATION DIVISION

MIAMI–DADE COUNTY, FLORIDA
PRODUCT CONTROL SECTION
11805 SW 26 Street, Room 208
T (786) 315–2590 F (786) 315–2599
www.miamidade.gov/economy

NOTICE OF ACCEPTANCE (NOA)

Miami Tech, Inc.
3611 NW 74 Street
Miami, FL 33147

SCOPE:

This NOA is being issued under the applicable rules and regulations governing the use of construction materials. The documentation submitted has been reviewed and accepted by Miami–Dade County RER–Product Control Section to be used in Miami–Dade County and other areas where allowed by the Authority Having Jurisdiction (AHJ).

This NOA shall not be valid after the expiration date stated below. The Miami–Dade County Product Control Section (In Miami–Dade County) and/or the AHJ (in areas other than Miami–Dade County) reserve the right to have this product or material tested for quality assurance purposes. If this product or material fails to perform in the accepted manner, the manufacturer will incur the expense of such testing and the AHJ may immediately revoke, modify, or suspend the use of such product or material within their jurisdiction. RER reserves the right to revoke this acceptance, if it is determined by Miami–Dade County Product Control Section that this product or material fails to meet the requirements of the applicable building code.

This product is approved as described herein, and has been designed to comply with the Florida Building Code, including the High Velocity Hurricane Zone.

DESCRIPTION: Aluminum A/C Stand

APPROVAL DOCUMENT: Drawing No. **15-2476**, titled "Aluminum A/C Stand HVHZ Compliant", sheets 1 through 10 of 10, dated 01/10/2007, and last revised on 05/07/2016, prepared by Engineering Express, signed and sealed by Frank L. Bennardo, P.E., bearing the Miami-Dade County Product Control revision stamp with the Notice of Acceptance number & expiration date by Miami-Dade County Product Control Section.

MISSILE IMPACT RATING: None.

LABELING: Each unit shall bear a permanent label with the manufacturer's name or logo, city, state, model/series, and following statement: "Miami–Dade County Product Control Approved", unless otherwise noted herein.

RENEWAL of this NOA shall be considered after a renewal application has been filed and there has been no change in the applicable building code negatively affecting the performance of this product.

TERMINATION of this NOA will occur after the expiration date or if there has been a revision or change in the materials, use, and/or manufacture of the product or process. Misuse of this NOA as an endorsement of any product, for sales, advertising or any other purposes shall automatically terminate this NOA. Failure to comply with any section of this NOA shall be cause for termination and removal of NOA.

ADVERTISEMENT: The NOA number preceded by the words Miami–Dade County, Florida, and followed by the expiration date may be displayed in advertising literature. If any portion of the NOA is displayed, then it shall be done in its entirety.

INSPECTION: A copy of this entire NOA shall be provided to the user by the manufacturer or its distributors and shall be available for inspection at the job site at the request of the Building Official.

This NOA **revises NOA# 15-0902.05** and consists of this page 1 and evidence pages E-1, as well as approval document mentioned above.

The submitted documentation was reviewed by **Jorge M. Plasencia, P.E.**

MIAMI-DADE COUNTY APPROVED 07/07/2016

NOTICE OF ACCEPTANCE: EVIDENCE SUBMITTED

A. DRAWINGS

1. Drawing No. **15-2476**, titled "Aluminum A/C Stand HVHZ Compliant", sheets 1 through 10 of 10, dated 01/10/2007, and last revised on 05/07/2016, prepared by Engineering Express, signed and sealed by Frank L. Bennardo, P.E.

B. TESTS

1. Load Testing of Aluminum A/C Stand Post to Welded Baseplate, prepared by QC Metallurgical, Inc., QCM Job No. 15KM-958, dated 11/13/15, signed by Jerry Iaciofano
   (Voluntary Testing)
   (Submitted under NOA No. 15-0902.05)

C. CALCULATIONS

1. Engineering design calculations, prepared by Engineering Express, dated 05/25/16 and last revised on 06/23/16, signed and sealed by Frank L. Bernardo, P.E.
2. Engineering design calculations, prepared by Engineering Express, dated 08/21/15 and, signed and sealed by Frank L. Bernardo, P.E.
   (Submitted under NOA No. 15-0902.05)

D. QUALITY ASSURANCE

1. Miami Dade Department of Regulatory and Economic Resources (RER).

E. MATERIAL CERTIFICATIONS

1. None.

F. STATEMENTS

1. Statement letters dated 08/24/2015 indicating compliance to FBC 2014 (5th Edition) prepared by Engineering Express signed & sealed by Frank L. Bernardo, P.E.
   (Submitted under NOA No. 15-0902.05)

G. OTHER

1. Notice of Acceptance No. **15-0902.05**, issued to Miami Tech, Inc., for their **Aluminum A/C Stand**, approved on 03/10/2016 and expiring on 01/15/2019.

Jorge M. Plasencia, P.E.
Product Control Unit Supervisor
NOA No. 16-0601.01
Expiration Date: January 15, 2019
Approval Date: July 14, 2016

ALUMINUM STANDS FOR MECHANICAL UNITS

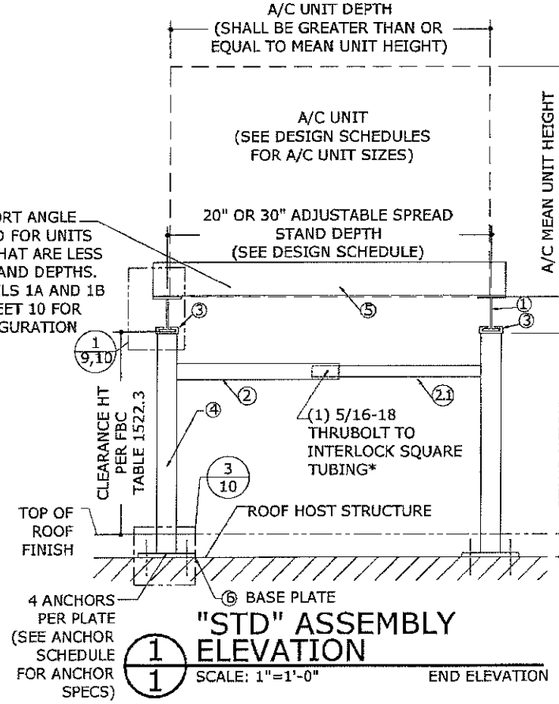

* PROVIDE 2" MIN EMBEDMENT OF 2.1 SQUARE TUBING INTO 2 SQUARE TUBING

† CENTER 10" LONG 2.1 SQUARE TUBING ABOUT ADJACENT 2 SQUARE TUBING ENDS

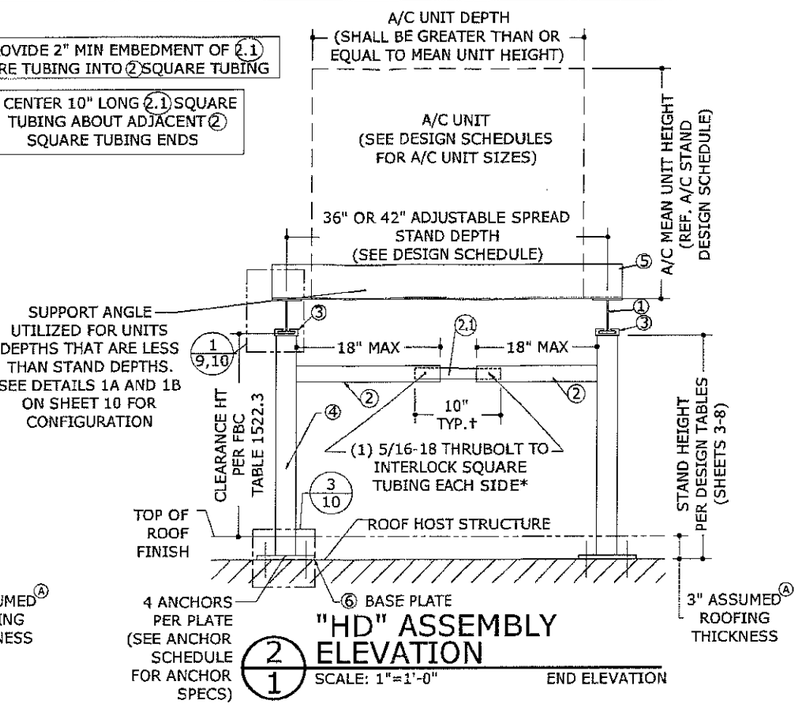

[A]UTILIZE NEXT-HIGHEST STAND HEIGHT FOR LARGER ROOF THICKNESS. FOR ROOFING WITHOUT INSULATION OMIT 3" THICKNESS AND UTILIZE CLEAR HEIGHT FROM FINISHED FLOOR.

UTILIZE NEXT-SMALLEST STAND DEPTH FOR VALUES IN BETWEEN EXISTING TABLES

75# MIN./450 # MAX UNIT WEIGHT AS VERIFIED BY OTHERS, TYP.

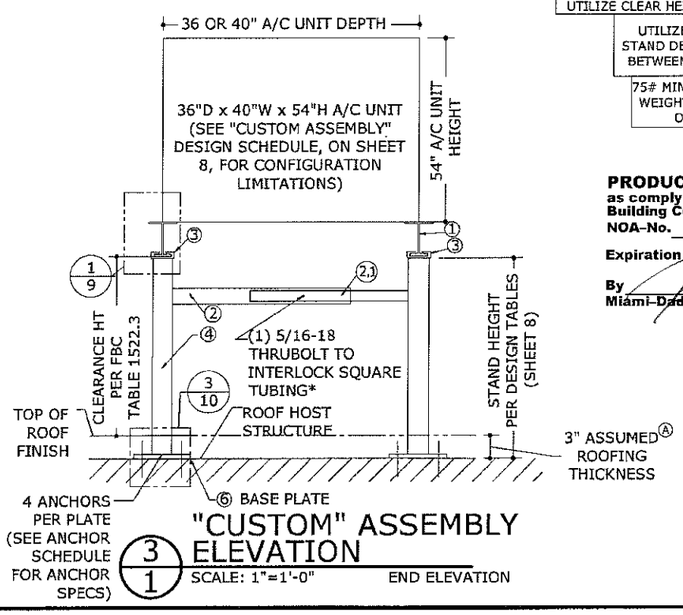

PRODUCT REVISED
as complying with the Florida Building Code
NOA-No. 16-0601.01
Expiration Date 01/15/2019
By
Miami-Dade Product Control

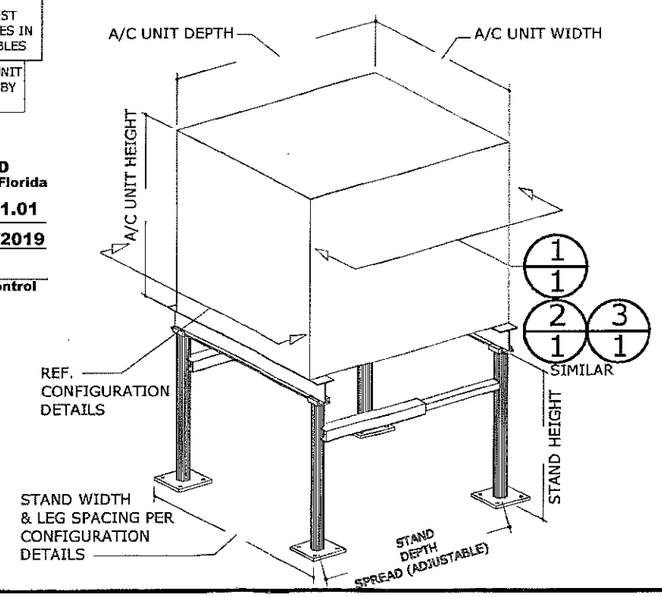

MAXIMUM ALLOWABLE DESIGN PRESSURES:

AS NOTED IN DESIGN SCHEDULES

DESIGN NOTES:

DESIGN PRESSURES CALCULATED FOR USE WITH THIS SYSTEM SHALL BE DETERMINED SEPARATELY ON A JOB-SPECIFIC BASIS IN ACCORDANCE WITH THE STRUCTURAL PROVISIONS OF THE FLORIDA BUILDING CODE FIFTH EDITION (2014). MAXIMUM DIMENSIONS AND WEIGHT OF A/C UNIT SHALL CONFORM TO SPECIFICATIONS STATED HEREIN, MINIMUM 75LB OR MAXIMUM AS LISTED HEREIN. THE ARCHITECT/ENGINEER OF RECORD FOR THE PROJECT SUPERSTRUCTURE WITH WHICH THIS DESIGN IS USED SHALL BE RESPONSIBLE FOR THE INTEGRITY OF ALL SUPPORTING SURFACES TO THIS DESIGN WHICH SHALL BE COORDINATED BY THE PERMITTING CONTRACTOR. REACTION FORCES LISTED FOR USE WITH HOST STRUCTURE VERIFICATION ARE CALCULATED USING ASD METHODOLOGY. DESIGN PROFESSIONAL OF RECORD TO VERIFY APPLICABILITY AND/OR ADDITIONAL FACTORS FOR USE WITH HOST STRUCTURE VERIFICATION. ALL FASTENERS TO BE #10 OR GREATER SAE GRADE 5, UNLESS NOTED OTHERWISE, CADMIUM PLATED OR OTHERWISE CORROSION RESISTANT MATERIAL AND SHALL COMPLY WITH J.3.4, SPECIFICATIONS FOR ALUM. STRUCTURES -SECTION 1, THE ALUMINUM ASSOCIATION,INC., & APPLICABLE FEDERAL,STATE, AND LOCAL CODES. PROVIDE (5) PITCHES MIN PAST THREAD PLANE. ALL EXTRUDED MEMBERS SHALL BE ALUMINUM ALLOY TYPE 6061-T6 OR 6005-T5. ALL 22GA DEFORMED STEEL STRAPS USED FOR UNIT TIE-DOWNS SHALL BE ASTM A36 MIN. STEEL. FABRICATION OF STEEL STRAPS SHALL BE BY STRAP MANUFACTURER ONLY. ALL EXISTING CONCRETE SUBSTRATE SHALL HAVE MINIMUM f'c COMPRESSIVE STRENGTH OF 3000 PSI AS VERIFIED BY OTHERS. ALUMINUM WELDING SHALL BE PERFORMED IN ACCORDANCE WITH FBC SECTION 2003.8.1.4 WITH WELD FILLER ALLOYS MEETING ANSI/AWS A5.10 STANDARDS TO ACHIEVE ULTIMATE DESIGN STRENGTH IN ACCORDANCE WITH THE ALUMINUM DESIGN MANUAL, TABLE J.2.1. SUGGESTED WELD FILLER: 5356 ELECTRODES. ALL ALUMINUM CONSTRUCTION SHALL BE IN CONFORMANCE WITH THE TOLERANCES, QUALITY AND METHODS OF CONSTRUCTION AS SET FORTH IN FBC SECTION 2003.2 AND THE AMERICAN WELDING SOCIETY'S STRUCTURAL WELDING CODE-ALUMINUM (D1.2). MINIMUM WELD IS ⅛" THROAT FULL PERIMETER FILLET WELD UNLESS OTHERWISE NOTED. THE CONTRACTOR IS RESPONSIBLE TO INSULATE MEMBERS FROM DISSIMILAR MATERIALS TO PREVENT ELECTROLYSIS. ELECTRICAL GROUND, WHEN REQUIRED, TO BE DESIGNED & INSTALLED BY OTHERS. ALL MECHANICAL SPECIFICATIONS (CLEAR SPACE, TONNAGE, ETC.) SHALL BE AS PER MANUFACTURER RECOMMENDATIONS AND ARE THE EXPRESS RESPONSIBILITY OF THE CONTRACTOR. ENGINEER SEAL AFFIXED HERETO VALIDATES STRUCTURAL DESIGN AS SHOWN ONLY. USE OF THIS SPECIFICATION BY CONTRACTOR, et. al. INDEMNIFIES & SAVES HARMLESS THIS ENGINEER FOR ALL COST & DAMAGES INCLUDING LEGAL FEES & APPELLATE FEES RESULTING FROM MATERIAL FABRICATION, SYSTEM ERECTION, CONSTRUCTION PRACTICES BEYOND THAT WHICH IS CALLED FOR BY LOCAL, STATE, & FEDERAL CODES & FROM DEVIATIONS OF THIS PLAN. THE SYSTEM DETAILED HEREIN IS GENERIC AND DOES NOT PROVIDE INFORMATION FOR A SPECIFIC SITE. FOR SITE CONDITIONS DIFFERENT FROM THE CONDITIONS DETAILED HEREIN, A LICENSED ENGINEER OR REGISTERED ARCHITECT SHALL PREPARE SITE SPECIFIC DOCUMENTS FOR USE IN CONJUNCTION WITH THIS DOCUMENT. EXCEPT AS EXPRESSLY PROVIDED HEREIN, NO ADDITIONAL CERTIFICATIONS OR AFFIRMATIONS ARE INTENDED. AC STANDS SHALL LABELED PER MIAMI-DADE REQUIREMENTS FOR NON-MANDATORY PRODUCT APPROVALS IN ACCORDANCE WITH THE FLORIDA BUILDING CODE.

GENERAL NOTES

1. THIS SYSTEM HAS BEEN DESIGNED AND SHALL BE FABRICATED IN ACCORDANCE WITH THE STRUCTURAL PROVISIONS OF THE FLORIDA BUILDING CODE FIFTH EDITION (2014).
2. MAXIMUM DIMENSIONS AND WEIGHT OF A/C UNIT SHALL CONFORM TO SPECIFICATIONS STATED HEREIN, MINIMUM 75LB OR MAXIMUM AS LISTED HEREIN.
3. THE ARCHITECT/ENGINEER OF RECORD FOR THE PROJECT SUPERSTRUCTURE WITH WHICH THIS DESIGN IS USED SHALL BE RESPONSIBLE FOR THE INTEGRITY OF ALL SUPPORTING SURFACES TO THIS DESIGN WHICH SHALL BE COORDINATED BY THE PERMITTING CONTRACTOR.
4. REACTION FORCES LISTED FOR USE WITH HOST STRUCTURE VERIFICATION ARE CALCULATED USING ASD METHODOLOGY. DESIGN PROFESSIONAL OF RECORD TO VERIFY APPLICABILITY AND/OR ADDITIONAL FACTORS FOR USE WITH HOST STRUCTURE VERIFICATION.
5. ALL FASTENERS TO BE #10 OR GREATER SAE GRADE 5, UNLESS NOTED OTHERWISE, CADMIUM PLATED OR OTHERWISE CORROSION RESISTANT MATERIAL AND SHALL COMPLY WITH J.3.4, SPECIFICATIONS FOR ALUM. STRUCTURES -SECTION 1, THE ALUMINUM ASSOCIATION,INC., & APPLICABLE FEDERAL,STATE, AND LOCAL CODES. PROVIDE (5) PITCHES MIN PAST THREAD PLANE.
6. ALL EXTRUDED MEMBERS SHALL BE ALUMINUM ALLOY TYPE 6061-T6 OR 6005-T5.
7. ALL 22GA DEFORMED STEEL STRAPS USED FOR UNIT TIE-DOWNS SHALL BE ASTM A36 MIN. STEEL. FABRICATION OF STEEL STRAPS SHALL BE BY STRAP MANUFACTURER ONLY.
8. ALL EXISTING CONCRETE SUBSTRATE SHALL HAVE MINIMUM f'c COMPRESSIVE STRENGTH OF 3000 PSI AS VERIFIED BY OTHERS.
9. ALUMINUM WELDING SHALL BE PERFORMED IN ACCORDANCE WITH FBC SECTION 2003.8.1.4 WITH WELD FILLER ALLOYS MEETING ANSI/AWS A5.10 STANDARDS TO ACHIEVE ULTIMATE DESIGN STRENGTH IN ACCORDANCE WITH THE ALUMINUM DESIGN MANUAL, TABLE J.2.1. SUGGESTED WELD FILLER: 5356 ELECTRODES. ALL ALUMINUM CONSTRUCTION SHALL BE IN CONFORMANCE WITH THE TOLERANCES, QUALITY AND METHODS OF CONSTRUCTION AS SET FORTH IN FBC SECTION 2003.2 AND THE AMERICAN WELDING SOCIETY'S STRUCTURAL WELDING CODE-ALUMINUM (D1.2). MINIMUM WELD IS ⅛" THROAT FULL PERIMETER FILLET WELD UNLESS OTHERWISE NOTED.
10. THE CONTRACTOR IS RESPONSIBLE TO INSULATE MEMBERS FROM DISSIMILAR MATERIALS TO PREVENT ELECTROLYSIS.
11. ELECTRICAL GROUND, WHEN REQUIRED, TO BE DESIGNED & INSTALLED BY OTHERS. ALL MECHANICAL SPECIFICATIONS (CLEAR SPACE, TONNAGE, ETC.) SHALL BE AS PER MANUFACTURER RECOMMENDATIONS AND ARE THE EXPRESS RESPONSIBILITY OF THE CONTRACTOR.
12. ENGINEER SEAL AFFIXED HERETO VALIDATES STRUCTURAL DESIGN AS SHOWN ONLY. USE OF THIS SPECIFICATION BY CONTRACTOR, et. al. INDEMNIFIES & SAVES HARMLESS THIS ENGINEER FOR ALL COST & DAMAGES INCLUDING LEGAL FEES & APPELLATE FEES RESULTING FROM MATERIAL FABRICATION, SYSTEM ERECTION, CONSTRUCTION PRACTICES BEYOND THAT WHICH IS CALLED FOR BY LOCAL, STATE, & FEDERAL CODES & FROM DEVIATIONS OF THIS PLAN.
13. THE SYSTEM DETAILED HEREIN IS GENERIC AND DOES NOT PROVIDE INFORMATION FOR A SPECIFIC SITE. FOR SITE CONDITIONS DIFFERENT FROM THE CONDITIONS DETAILED HEREIN, A LICENSED ENGINEER OR REGISTERED ARCHITECT SHALL PREPARE SITE SPECIFIC DOCUMENTS FOR USE IN CONJUNCTION WITH THIS DOCUMENT.
14. EXCEPT AS EXPRESSLY PROVIDED HEREIN, NO ADDITIONAL CERTIFICATIONS OR AFFIRMATIONS ARE INTENDED.
15. AC STANDS SHALL LABELED PER MIAMI-DADE REQUIREMENTS FOR NON-MANDATORY PRODUCT APPROVALS IN ACCORDANCE WITH THE FLORIDA BUILDING CODE.

FRANK L. BENNARDO, P.E.
#PE0046549
06/23/2016
VALID FOR (1) JOB ONLY
ONLY WHEN ORIGINAL ENGINEER SEAL

ENGINEERING EXPRESS
CORPORATE OFFICE:
160 SW 12th AVE, SUITE
DEERFIELD BEACH, FL 3344
P: (954) 354-0660 F: (954) 354-0443
E: HELLO@ENGINEERINGEXPRESS.COM
ENGINEERINGEXPRESS.COM
CERT OF AUTH #9985

MIAMI TECH, INC
3611 NW 74TH STREET
MIAMI, FL 33147
PHONE:(305) 693-7054 FAX:(305) 693-6125

ALUMINUM A/C STAND
HVHZ COMPLAINT

REMARKS	DRWN	CHKD	DATE
INIT ISSUE	KL	CL	01/10/07
REV. TELESCOPIC BOLTS	KL	CL	05/03/07
UPDATE PER '07 FBC	TSB	CL	09/30/08
UPDATE PER '10 FBC	CSL	TSB	05/10/12
REV. PER COMMENTS	CSL	TSB	08/16/12
FBC UPDATE	RWN	CSL	07/07/15
REV PER MD COMMENTS	RWN	FLB	05/07/16

COPYRIGHT ENGINEERING EXPRESS
THIS DOCUMENT IS THE PROPERTY OF ENGINEERING EXPRESS, INC. IT SHALL NOT BE REPRODUCED IN WHOLE OR PART, WITHOUT WRITTEN PERMISSION OF ENGINEERING EXPRESS, INC. ENGINEER, ALTERATIONS, ADDITIONS, REDRAWING, OR OTHER MARKINGS TO THIS DOCUMENT ARE NOT PERMITTED AND INVALIDATE CERTIFICATION.

15-2476

SCALE: NTS

PAGE DESCRIPTION:
COVER SHEET

1 OF 10

STAND COMPONENTS

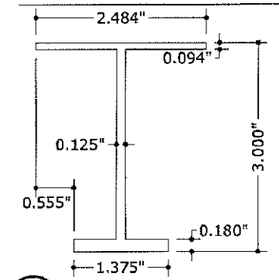

1 RAIL (I-BEAM)
6"=1'-0"

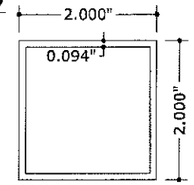

2 CROSSMEMBER OUTER TUBING
6"=1'-0"

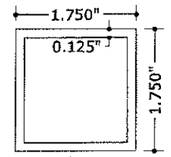

2.1 CROSSMEMBER INNER TUBING
6"=1'-0"

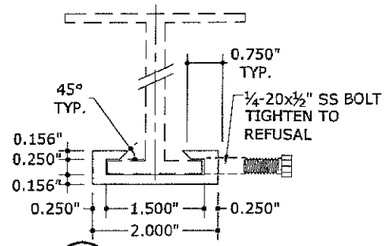

3 C-CHANNEL
6"=1'-0"

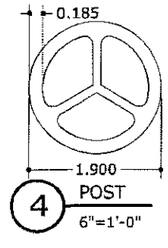

4 POST
6"=1'-0"

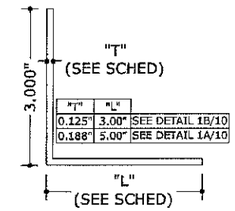

"T"	"L"	
0.125"	3.00"	SEE DETAIL 1B/10
0.188"	5.00"	SEE DETAIL 1A/10

5 SUPPORT ANGLE
6"=1'-0"

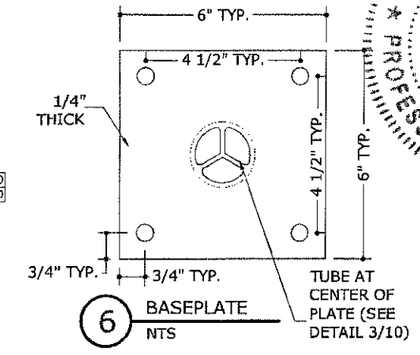

6 BASEPLATE
NTS

MEAN UNIT HEIGHT & MAX FACE AREA CALCULATION DIRECTIVE:

THIS DIRECTIVE SHALL BE USED TO CALCULATE THE MEAN UNIT HEIGHT & MAXIMUM FACE AREA OF ANY MULTIPLE UNIT CONFIGURATION.

EXAMPLE CONFIGURATIONS:

2 UNITS:2 FRAME CONFIGURATION

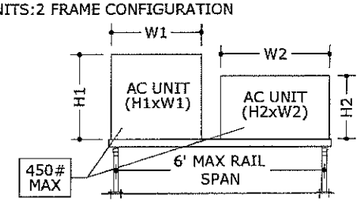

3 UNITS:3 FRAME CONFIGURATION

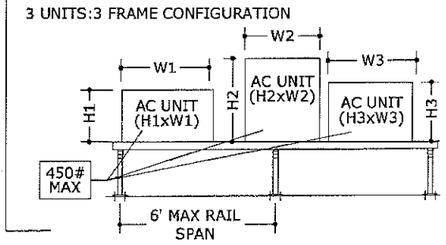

4 UNITS:4 FRAME CONFIGURATION

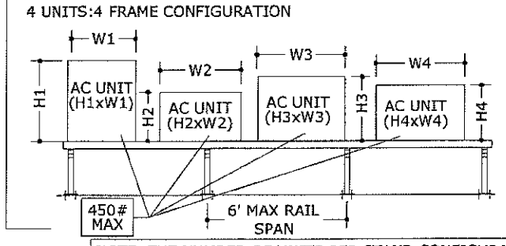

NOTE: THE NUMBER OF UNITS PER STAND CONFIGURATION MAY BE UNLIMITED PROVIDED THAT MULTIPLE UNITS CONFORM TO THE MEAN UNIT HEIGHT & MAXIMUM UNIT FACE AREA RESTRICTIONS UTILIZED IN THE DESIGN SCHEDULES.

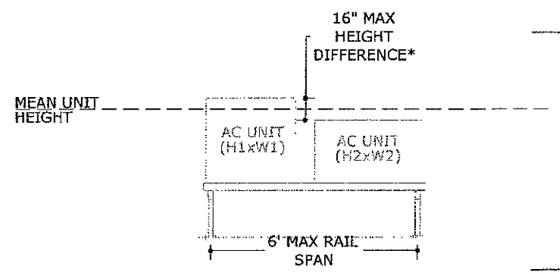

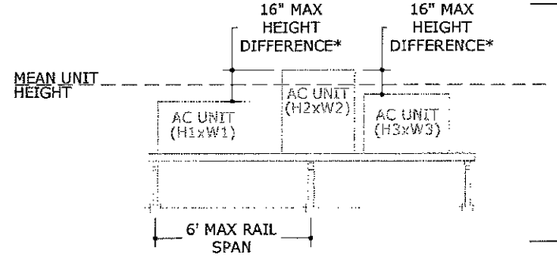

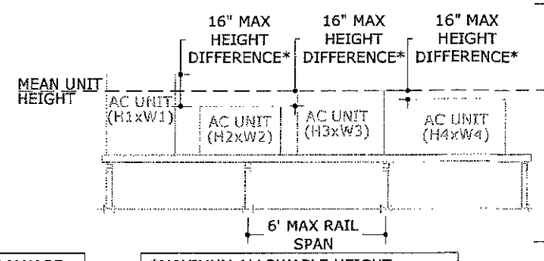

*MAXIMUM ALLOWABLE HEIGHT DIFFERENCE BETWEEN ANY UNITS IN A MULTIPLE UNIT CONFIGURATION IS RESTRICTED TO 16" MAX.

FORMULAS USED FOR DETERMINING MEAN UNIT HEIGHT & MAXIMUM UNIT FACE AREA:

1. CALCULATE THE MEAN UNIT HEIGHT BY THE FOLLOWING EQUATION:
   - TWO UNITS: $\frac{H1+H2}{2}$
   - THREE UNITS: $\frac{H1+H2+H3}{3}$
   - FOUR UNITS: $\frac{H1+H2+H3+H4}{4}$
   - "n" UNITS: $\frac{H1+H2+H3+...Hn}{n}$
2. CALCULATE THE MAXIMUM UNIT FACE AREA BY THE FOLLOWING EQUATION:
   - TWO UNITS: (H1xW1)+(H2xW2)
   - THREE UNITS: (H1xW1)+(H2xW2)+(H3xW3)
   - FOUR UNITS: (H1xW1)+(H2xW2)+(H3xW3)+(H4xW4)
   - "n" UNITS: (H1xW1)+...(HnxWn)

PRODUCT REVISED
as complying with the Florida Building Code
NOA-No. 16-0601.01
Expiration Date 01/15/2019
By
Miami-Dade Product Control

EXAMPLE SCENARIO:

1. CONSIDER A FOUR UNIT CONFIGURATION WITH THE DIMENSIONS AS SHOWN BELOW.
2. CALCULATE THE MEAN UNIT HEIGHT.
   - FOUR UNITS: $\frac{H1+H2+H3+H4}{4} = \frac{20"+29"+22"+25"}{4} =$ 24" MEAN UNIT HEIGHT
3. CALCULATE THE MAXIMUM FACE AREA.
   - FOUR UNITS: (H1xW1)+(H2xW2)+(H3xW3)+(H4xW4) = (20"x21")+(29"x25")+(22"x22")+(25"x27")

   = 2304 in²

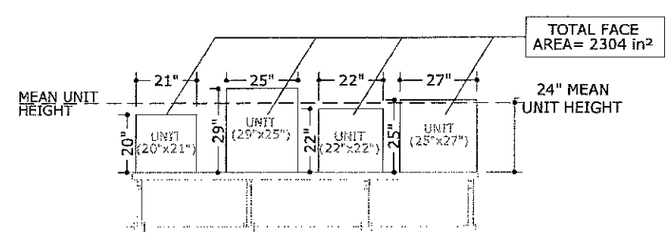

FRANK L. BENVARDO, P.E.
#FE0046541
06/23/2016
VALID FOR (1) JOB(S) ONLY
ONLY W/ ORIGINAL ENGINEER SEAL
ENGINEERING EXPRESS®
CORPORATE OFFICE:
160 SW 12th AVE, SUITE 106
DEERFIELD BEACH, FL 33442
P: (954) 354-0560 F: (954) 354-0443
E: HELLO@ENGINEERINGEXPRESS.COM
ENGINEERINGEXPRESS.COM
CERT OF AUTH #9885

MIAMI TECH, INC
3611 NW 74TH STREET
MIAMI, FL 33147
PHONE:(305) 693-7054 FAX:(305) 693-6125

ALUMINUM A/C STAND
HVHZ COMPLAINT

REMARKS	DRWN	CHKD	DATE
INIT ISSUE	KL	CL	01/10/07
REV. TELESCOPIC BOLTS	KL	CL	06/03/07
UPDATE PER '07 FBC	TSB	CL	09/30/08
UPDATE PER '10 FBC	CSL	TSB	05/10/12
REV. PER COMMENTS	CSL	TSB	08/16/12
FBC UPDATE	RWN	CSL	07/07/15
REV PER MD COMMENTS	RWN	FLB	05/07/16

COPYRIGHT ENGINEERING EXPRESS
THIS DOCUMENT IS THE PROPERTY OF ENGINEERING EXPRESS AND SHALL NOT BE REPRODUCED IN WHOLE OR PART WITHOUT WRITTEN CONSENT OF THE CERTIFYING ENGINEER. ALTERATIONS, ADDITIONS, VISUAL AIDING, OR OTHER MARKINGS TO THIS DOCUMENT ARE NOT PERMITTED UNDER FINANCIAL SANCTION OF LAW.

15-2476

SCALE: NTS

PAGE DESCRIPTION:
COVER SHEET

2 OF 10

06/23/2016 - 2:08pm gordond V:\Projects\15-2478 NOA Existing - Update 13-1017.09 for 2014 Florida Bldg Code-Project\PMD Revision (6-23-16) - 16-0601.01\15-2478m NOA Existing - Update 13-1017.09 for 2014 Florida Bldg Code.dwg

"STD" STAND DESIGN SCHEDULES & STAND DIRECTIVE EXAMPLE

20" MINIMUM STAND DEPTH: MAX FACE AREA (2880in² - 8820in²), FRAME QUANTITY (5-8 FRAMES)

STAND CLEAR HEIGHT	MAX MEAN UNIT HEIGHT	MAX FACE AREA	UNIT TO FRAME RATIO: MAX FACE AREA : 8 FRAMES				MAX FACE AREA : 7 FRAMES				MAX FACE AREA : 6 FRAMES				MAX FACE AREA : 5 FRAMES				LOAD TRANSFER INFORMATION FOR USE WITH HOST STRUCTURE VERIFICATION ONLY			
			ANCHOR TYPE: 1 OR 4		ANCHORS TYPE: 2 OR 3		ANCHOR TYPE: 1 OR 4		ANCHORS TYPE: 2 OR 3		ANCHOR TYPE: 1 OR 4		ANCHORS TYPE: 2 OR 3		ANCHOR TYPE: 1 OR 4		ANCHORS TYPE: 2 OR 3		MAX. BASE MOMENT (M)	MAX. BASE SHEAR (V)	MAX. BASE UPLIFT (T)	MAX. BASE GRAVITY (C)
			MAX ALLOWABLE LATERAL LOAD	MAX ALLOWABLE UPLIFT	MAX ALLOWABLE LATERAL LOAD	MAX ALLOWABLE UPLIFT	MAX ALLOWABLE LATERAL LOAD	MAX ALLOWABLE UPLIFT	MAX ALLOWABLE LATERAL LOAD	MAX ALLOWABLE UPLIFT	MAX ALLOWABLE LATERAL LOAD	MAX ALLOWABLE UPLIFT	MAX ALLOWABLE LATERAL LOAD	MAX ALLOWABLE UPLIFT	MAX ALLOWABLE LATERAL LOAD	MAX ALLOWABLE UPLIFT	MAX ALLOWABLE LATERAL LOAD	MAX ALLOWABLE UPLIFT				
18 "			200.0 PSF	100.0 PSF	200.0 PSF	100.0 PSF	200.0 PSF	100.0 PSF	200.0 PSF	100.0 PSF	200.0 PSF	100.0 PSF	200.0 PSF	100.0 PSF	193.8 PSF	96.9 PSF	191.1 PSF	95.5 PSF	364.90 LB-FT	387.6 LB	1450.6 LB	1298.0 LB
24 "	24 "	2880 in²	200.0 PSF	100.0 PSF	200.0 PSF	100.0 PSF	190.5 PSF	95.2 PSF	190.5 PSF	95.2 PSF	163.3 PSF	81.6 PSF	163.3 PSF	81.6 PSF	136.1 PSF	68.0 PSF	136.1 PSF	68.0 PSF	327.80 LB-FT	272.2 LB	1181.6 LB	1114.9 LB
30 "			167.0 PSF	83.5 PSF	167.0 PSF	83.5 PSF	146.1 PSF	73.0 PSF	146.1 PSF	73.0 PSF	125.3 PSF	62.6 PSF	125.3 PSF	62.6 PSF	104.4 PSF	52.2 PSF	104.4 PSF	52.2 PSF	305.60 LB-FT	208.8 LB	1030.2 LB	1012.1 LB
18 "			149.7 PSF	74.8 PSF	149.7 PSF	74.8 PSF	149.7 PSF	74.8 PSF	149.7 PSF	74.8 PSF	148.8 PSF	74.4 PSF	143.2 PSF	71.6 PSF	124.0 PSF	62.0 PSF	119.4 PSF	59.7 PSF	364.90 LB-FT	387.6 LB	1570.7 LB	1414.3 LB
24 "	30 "	4500 in²	139.3 PSF	69.6 PSF	139.3 PSF	69.6 PSF	121.9 PSF	60.9 PSF	121.9 PSF	60.9 PSF	104.5 PSF	52.2 PSF	104.5 PSF	52.2 PSF	87.1 PSF	43.5 PSF	87.1 PSF	43.5 PSF	327.80 LB-FT	272.2 LB	1265.3 LB	1196.6 LB
30 "			106.9 PSF	53.4 PSF	106.9 PSF	53.4 PSF	93.5 PSF	46.7 PSF	93.5 PSF	46.7 PSF	80.2 PSF	40.1 PSF	80.2 PSF	40.1 PSF	66.8 PSF	33.4 PSF	66.8 PSF	33.4 PSF	305.60 LB-FT	208.8 LB	1092.8 LB	1074.8 LB
18 "			94.1 (114.8) PSF	57.4 PSF	94.1 (114.8) PSF	57.4 PSF	94.1 (114.8) PSF	57.4 PSF	94.1 (113.2) PSF	56.6 PSF	94.1 (103.3) PSF	51.6 PSF	94.1 (97.1) PSF	48.5 PSF	86.1 PSF	43.0 PSF	81.0 PSF	40.5 PSF	364.90 LB-FT	387.6 LB	1687.0 LB	1530.6 LB
24 "	36 "	6480 in²	94.1 (96.7) PSF	48.3 PSF	94.1 (96.7) PSF	48.3 PSF	84.6 PSF	42.3 PSF	84.6 PSF	42.3 PSF	72.5 PSF	36.2 PSF	72.5 PSF	36.2 PSF	60.4 PSF	30.2 PSF	60.4 PSF	30.2 PSF	327.80 LB-FT	272.2 LB	1346.9 LB	1278.2 LB
30 "			74.2 PSF	37.1 PSF	74.2 PSF	37.1 PSF	64.9 PSF	32.4 PSF	64.9 PSF	32.4 PSF	55.6 PSF	27.8 PSF	55.6 PSF	27.8 PSF	46.4 PSF	23.2 PSF	46.4 PSF	23.2 PSF	305.60 LB-FT	208.8 LB	1155.5 LB	1137.5 LB
18 "			63.1 (82.3) PSF	41.1 PSF	63.1 (82.3) PSF	41.1 PSF	63.1 (82.3) PSF	41.1 PSF	63.1 (81.3) PSF	40.6 PSF	63.1 (75.9) PSF	37.9 PSF	63.1 (69.7) PSF	34.8 PSF	63.1 (63.2) PSF	31.6 PSF	58.1 PSF	29.0 PSF	364.90 LB-FT	387.6 LB	1803.3 LB	1646.9 LB
24 "	42 "	8820 in²	63.1 (71.1) PSF	35.5 PSF	63.1 (71.1) PSF	35.5 PSF	62.2 PSF	31.1 PSF	62.2 PSF	31.1 PSF	53.3 PSF	26.6 PSF	53.3 PSF	26.6 PSF	44.4 PSF	22.2 PSF	44.4 PSF	22.2 PSF	327.80 LB-FT	272.2 LB	1428.6 LB	1359.9 LB
30 "			54.5 PSF	27.2 PSF	54.5 PSF	27.2 PSF	47.7 PSF	23.8 PSF	47.7 PSF	23.8 PSF	40.9 PSF	20.4 PSF	40.9 PSF	20.4 PSF	34.0 PSF	17.0 PSF	34.0 PSF	17.0 PSF	305.60 LB-FT	208.8 LB	1218.1 LB	1200.1 LB

20" MINIMUM STAND DEPTH: MAX FACE AREA (2304in² - 7056in²), FRAME QUANTITY (4-7 FRAMES)

STAND CLEAR HEIGHT	MAX MEAN UNIT HEIGHT	MAX FACE AREA	UNIT TO FRAME RATIO: MAX FACE AREA : 7 FRAMES				MAX FACE AREA : 6 FRAMES				MAX FACE AREA : 5 FRAMES				MAX FACE AREA : 4 FRAMES				LOAD TRANSFER INFORMATION FOR USE WITH HOST STRUCTURE VERIFICATION ONLY			
			ANCHOR TYPE: 1 OR 4		ANCHORS TYPE: 2 OR 3		ANCHOR TYPE: 1 OR 4		ANCHORS TYPE: 2 OR 3		ANCHOR TYPE: 1 OR 4		ANCHORS TYPE: 2 OR 3		ANCHOR TYPE: 1 OR 4		ANCHORS TYPE: 2 OR 3		MAX. BASE MOMENT (M)	MAX. BASE SHEAR (V)	MAX. BASE UPLIFT (T)	MAX. BASE GRAVITY (C)
			MAX ALLOWABLE LATERAL LOAD	MAX ALLOWABLE UPLIFT	MAX ALLOWABLE LATERAL LOAD	MAX ALLOWABLE UPLIFT	MAX ALLOWABLE LATERAL LOAD	MAX ALLOWABLE UPLIFT	MAX ALLOWABLE LATERAL LOAD	MAX ALLOWABLE UPLIFT	MAX ALLOWABLE LATERAL LOAD	MAX ALLOWABLE UPLIFT	MAX ALLOWABLE LATERAL LOAD	MAX ALLOWABLE UPLIFT	MAX ALLOWABLE LATERAL LOAD	MAX ALLOWABLE UPLIFT	MAX ALLOWABLE LATERAL LOAD	MAX ALLOWABLE UPLIFT				
18 "			200.0 PSF	100.0 PSF	200.0 PSF	100.0 PSF	200.0 PSF	100.0 PSF	200.0 PSF	100.0 PSF	200.0 PSF	100.0 PSF	200.0 PSF	100.0 PSF	193.8 PSF	96.9 PSF	191.1 PSF	95.5 PSF	364.90 LB-FT	387.6 LB	1450.6 LB	1298.0 LB
24 "	24 "	2304 in²	200.0 PSF	100.0 PSF	200.0 PSF	100.0 PSF	200.0 PSF	100.0 PSF	200.0 PSF	100.0 PSF	170.1 PSF	85.0 PSF	170.1 PSF	85.0 PSF	136.1 PSF	68.0 PSF	136.1 PSF	68.0 PSF	327.80 LB-FT	272.2 LB	1179.7 LB	1114.9 LB
30 "			182.7 PSF	91.3 PSF	182.7 PSF	91.3 PSF	156.6 PSF	78.3 PSF	156.6 PSF	78.3 PSF	130.5 PSF	65.2 PSF	130.5 PSF	65.2 PSF	104.4 PSF	52.2 PSF	104.4 PSF	52.2 PSF	305.60 LB-FT	208.8 LB	1031.4 LB	1012.1 LB
18 "			149.7 PSF	74.8 PSF	149.7 PSF	74.8 PSF	149.7 PSF	74.8 PSF	149.7 PSF	74.8 PSF	149.7 PSF	74.8 PSF	149.1 PSF	74.5 PSF	124.0 PSF	62.0 PSF	119.4 PSF	59.7 PSF	364.90 LB-FT	387.6 LB	1567.0 LB	1414.3 LB
24 "	30 "	3600 in²	149.7 PSF	74.8 PSF	149.7 PSF	74.8 PSF	130.6 PSF	65.3 PSF	130.6 PSF	65.3 PSF	108.8 PSF	54.4 PSF	108.8 PSF	54.4 PSF	87.1 PSF	43.5 PSF	87.1 PSF	43.5 PSF	327.80 LB-FT	272.2 LB	1264.3 LB	1196.6 LB
30 "			116.9 PSF	58.4 PSF	116.9 PSF	58.4 PSF	100.2 PSF	50.1 PSF	100.2 PSF	50.1 PSF	83.5 PSF	41.7 PSF	83.5 PSF	41.7 PSF	66.8 PSF	33.4 PSF	66.8 PSF	33.4 PSF	305.60 LB-FT	208.8 LB	1094.0 LB	1074.8 LB
18 "			94.1 (114.8) PSF	57.4 PSF	94.1 (114.8) PSF	57.4 PSF	94.1 (114.8) PSF	57.4 PSF	94.1 (114.8) PSF	57.4 PSF	94.1 (107.6) PSF	53.8 PSF	94.1 (101.1) PSF	50.5 PSF	86.1 PSF	43.0 PSF	81.0 PSF	40.5 PSF	364.90 LB-FT	387.6 LB	1687.8 LB	1530.6 LB
24 "	36 "	5184 in²	94.1 (105.8) PSF	52.9 PSF	94.1 (105.8) PSF	52.9 PSF	90.7 PSF	45.3 PSF	90.7 PSF	45.3 PSF	75.6 PSF	37.8 PSF	75.6 PSF	37.8 PSF	60.4 PSF	30.2 PSF	60.4 PSF	30.2 PSF	327.80 LB-FT	272.2 LB	1348.1 LB	1278.2 LB
30 "			81.2 PSF	40.6 PSF	81.2 PSF	40.6 PSF	69.6 PSF	34.8 PSF	69.6 PSF	34.8 PSF	58.0 PSF	29.0 PSF	58.0 PSF	29.0 PSF	46.4 PSF	23.2 PSF	46.4 PSF	23.2 PSF	305.60 LB-FT	208.8 LB	1156.7 LB	1137.5 LB
18 "			63.1 (82.3) PSF	41.1 PSF	63.1 (82.3) PSF	41.1 PSF	63.1 (82.3) PSF	41.1 PSF	63.1 (82.3) PSF	41.1 PSF	63.1 (79.1) PSF	39.5 PSF	63.1 (72.6) PSF	36.3 PSF	63.1 (63.2) PSF	31.6 PSF	58.1 PSF	29.0 PSF	364.90 LB-FT	387.6 LB	1804.1 LB	1646.9LB
24 "	42 "	7056 in²	63.1 (77.7) PSF	38.8 PSF	63.1 (77.7) PSF	38.8 PSF	63.1 (66.6) PSF	33.3 PSF	63.1 (66.6) PSF	33.3 PSF	55.5 PSF	27.7 PSF	55.5 PSF	27.7 PSF	44.4 PSF	22.2 PSF	44.4 PSF	22.2 PSF	327.80 LB-FT	272.2 LB	1429.8 LB	1359.9 LB
30 "			59.6 PSF	29.8 PSF	59.6 PSF	29.8 PSF	51.1 PSF	25.5 PSF	51.1 PSF	25.5 PSF	42.6 PSF	21.3 PSF	42.6 PSF	21.3 PSF	34.0 PSF	17.0 PSF	34.0 PSF	17.0 PSF	305.60 LB-FT	208.8 LB	1219.3 LB	1200.1 LB

STAND EXAMPLE

(THE FOLLOWING EXAMPLE ILLUSTRATES THE PROCEDURE USED TO DETERMINE THE MAXIMUM ALLOWABLE WIND PRESSURE & UPLIFT FOR ANY GIVEN MECHANICAL UNIT CONFIGURATION THAT CONFORMS TO THE DIMENSION RESTRICTIONS LISTED HEREIN. SEE SHEET 2 FOR MEAN UNIT HEIGHT & MAXIMUM FACE AREA CALCULATION DIRECTIVE. SEE SHEET 2 FOR COMPONENT SCHEDULE. SEE SHEET 9 FOR ANCHOR SCHEDULES.)

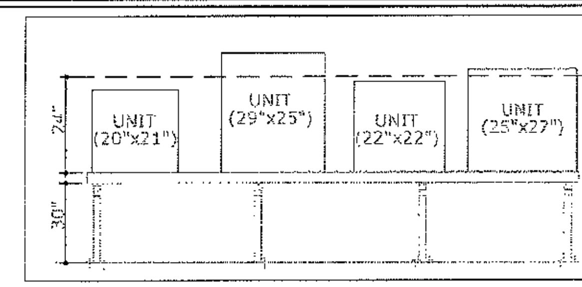

MECHANICAL UNIT/STAND CRITERIA:

CONSIDER THE INSTALLATION OF (4) MECHANICAL UNITS, (1)-20" TALL x 24" DEEP x 21" WIDE, (1)-29" TALL x 24" DEEP x 25" WIDE,(1)-22" TALL x 24" DEEP x 22" WIDE, (1)-25" TALL x 27" DEEP x 27" WIDE,[350 LB MAX WEIGHT] INSTALLED WITH THE FOLLOWING CRITERIA:

- NUMBER OF LEG FRAMES= (4) FRAMES
- STAND HEIGHT= 30" HEIGHT
- STAND DEPTH= 20" STAND DEPTH SPREAD
- HOST STRUCTURE TYPE= 3,000 PSI CONCRETE (AS VERIFIED BY OTHERS).

	PROCEDURE:	*RESULT:*
1	DETERMINE THE MEAN UNIT HEIGHT FOR THE GIVEN CONFIGURATION	SEE SHEET 2, CALCULATION DIRECTIVE STEP #1 FOR METHOD OF CALCULATING THE MEAN UNIT HEIGHT. FOR CLARIFICATION, THIS CONFIGURATION HAS BEEN WORKED OUT IN THE EXAMPLE SCENARIO. **(MEAN UNIT HEIGHT = 24 in)**
2	DETERMINE THE MAXIMUM FACE AREA FOR THE GIVEN CONFIGURATION	SEE SHEET 2, CALCULATION DIRECTIVE STEP #2 FOR METHOD OF CALCULATING THE MAXIMUM TOTAL UNIT FACE AREA. FOR CLARIFICATION, THIS CONFIGURATION HAS BEEN WORKED OUT IN THE EXAMPLE SCENARIO. **(MAXIMUM UNIT FACE AREA = 2304 in²)**
3	LOCATE DESIGN SCHEDULE THAT APPLIES TO THE GIVEN CONFIGURATION	SEE SHEET 3 FOR THE 20" STAND DEPTH WITH A MAXIMUM FACE AREA OF 2304 in².
4	DETERMINE THE MAXIMUM ALLOWABLE LATERAL & UPLIFT WIND LOADS	FOR A 2304 in² MAX TOTAL UNIT FACE AREA ON A 30" STAND HEIGHT WITH (4) SUPPORTING FRAMES, THE ALLOWABLE WIND LOADS ARE AS FOLLOWS: • ALLOWABLE LATERAL WIND LOAD: **104.0 PSF** • ALLOWABLE UPLIFT WIND LOAD: **52.2 PSF** (FROM TABLE ABOVE)
5	INSTALL STAND PER PERMISSIBLE ANCHOR TYPES AND VERIFY HOST STRUCTURE TYPE	UTILIZE ANCHOR TYPES FROM DESIGN SCHEDULE ASSOCIATED WITH THE ALLOWABLE WIND VALUES DETERMINED IN STEP 4. FOR THE TABLE LISTING, **ANCHOR TYPES 2 & 3 MAY BE APPLIED**. FOR THIS EXAMPLE UTILIZE ANCHOR TYPE 2 FOR CONCRETE HOST STRUCTURE TYPE. INSTALL STANDS PER ANCHOR SCHEDULE AND DETAILS AS ILLUSTRATED ON SHEET 9.

CONCLUSION:

6	MAXIMUM ALLOWABLE LATERAL DESIGN PRESSURE= MAXIMUM ALLOWABLE UPLIFT DESIGN PRESSURE=	= 104.0 PSF = 52.2 PSF (FROM TABLE ABOVE)
7	COMPARE TO SITE SPECIFIC DESIGN CONDITIONS	*COMPARE VALUES FROM STEP #6 TO THE SEPARATE SITE SPECIFIC REQUIRED DESIGN WIND PRESSURE PROVIDED BY A LICENSED ENGINEER OR REGISTERED ARCHITECT; NOT INCLUDED IN THIS CERTIFICATION. SITE-SPECIFIC PRESSURE REQUIREMENTS SHALL BE LESS THAN OR EQUAL TO THE LATERAL AND UPLIFT DESIGN PRESSURE ALLOWABLE CAPACITY VALUES LISTED.*

DESIGN SCHEDULE NOTES:

1. MAXIMUM CALCULATED FACE AREA SHALL BE EQUAL TO OR LESS THAN THE MAXIMUM ALLOWABLE FACE AREA FOR EACH CONFIGURATION.
2. REFERENCE ANCHOR SCHEDULE FOR ANCHOR TYPES LISTED HEREIN.
3. DESIGN VALUES IN PARENTHESIS REPRESENT CAPACITIES WHEN TIE-DOWN STRAPS ARE USED. SEE DETAIL 5 ON SHEET 9 FOR STRAP DETAILS.

TABLE LEGEND:
(oval) -DENOTES EXAMPLE VALUE FOR USE WITH COVER PAGE DIRECTIVE

PRODUCT REVISED
as complying with the Florida Building Code
NOA-No. 16-0601.01
Expiration Date 01/15/2019
By [signature]
Miami-Dade Product Control

FRANK L. BENNARDO, P.E. #PE0046549
FRANK L. BENNARDO LICENSE No. 46549 06/23/2016 STATE OF FLORIDA PROFESSIONAL ENGINEER
VALID FOR (1) JOB(s) ONLY ONLY W/ORIGINAL ENGINEER SEAL

ENGINEERING EXPRESS®
CORPORATE OFFICE:
160 SW 12th AVE, SUITE 106
DEERFIELD BEACH, FL 33442
P: (954) 354-0660 F: (954) 354-0443
E: HELLO@ENGINEERINGEXPRESS.COM
ENGINEERINGEXPRESS.COM
CERT OF AUTH #9885

MIAMI TECH, INC
3611 NW 74TH STREET
MIAMI, FL 33147
PHONE:(305) 693-7054 FAX:(305) 693-6125

ALUMINUM A/C STAND
HVHZ COMPLAINT

REMARKS	DRWN	CHKD	DATE
INIT ISSUE	KL	CL	01/10/07
REV. TELESCOPIC BOLTS	KL	CL	05/03/07
UPDATE PER '07 FBC	TSB	CL	09/30/08
UPDATE PER '10 FBC	CSL	TSB	05/10/12
REV. PER COMMENTS	CSL	TSB	08/16/12
FBC UPDATE	RWN	CSL	07/07/15
REV PER MD COMMENTS	RWN	FLB	05/07/16

THIS DOCUMENT IS THE PROPERTY OF ENGINEERING EXPRESS AND SHALL NOT BE REPRODUCED IN WHOLE OR PART WITHOUT WRITTEN CONSENT OF THE CERTIFYING ENGINEER. ALTERATIONS, ADDITIONS, HIGHLIGHTING, OR OTHER MARKINGS TO THIS DOCUMENT ARE NOT PERMITTED AND INVALIDATE OUR CERTIFICATION.
COPYRIGHT ENGINEERING EXPRESS

15-2476
SCALE: NTS
PAGE DESCRIPTION:
COVER SHEET

V:\Projects\15-2476 NOA Existing - Update 13-1017.09 for 2014 Florida Bldg Code-Project\WPMD Revision (6-23-16) - 16-0601.01\15-2476m NOA Existing - Update 13-1017.09 for 2014 Florida Bldg Code.dwg
06/23/2016 - 2:08pm gordonl

"STD" STAND DESIGN SCHEDULE CONTINUED

20" MINIMUM STAND DEPTH: MAX FACE AREA (1728in² - 5292in²), FRAME QUANTITY (3-6 FRAMES)

STAND CLEAR HEIGHT	MAX MEAN UNIT HEIGHT	MAX FACE AREA	UNIT TO FRAME RATIO: MAX FACE AREA : 6 FRAMES — ANCHOR TYPE: 1 OR 4 — MAX ALLOWABLE LATERAL LOAD	MAX ALLOWABLE UPLIFT	ANCHORS TYPE: 2 OR 3 — MAX ALLOWABLE LATERAL LOAD	MAX ALLOWABLE UPLIFT	MAX FACE AREA : 5 FRAMES — ANCHOR TYPE: 1 OR 4 — MAX ALLOWABLE LATERAL LOAD	MAX ALLOWABLE UPLIFT	ANCHORS TYPE: 2 OR 3 — MAX ALLOWABLE LATERAL LOAD	MAX ALLOWABLE UPLIFT	MAX FACE AREA : 4 FRAMES — ANCHOR TYPE: 1 OR 4 — MAX ALLOWABLE LATERAL LOAD	MAX ALLOWABLE UPLIFT	ANCHORS TYPE: 2 OR 3 — MAX ALLOWABLE LATERAL LOAD	MAX ALLOWABLE UPLIFT	MAX FACE AREA : 3 FRAMES — ANCHOR TYPE: 1 OR 4 — MAX ALLOWABLE LATERAL LOAD	MAX ALLOWABLE UPLIFT	ANCHORS TYPE: 2 OR 3 — MAX ALLOWABLE LATERAL LOAD	MAX ALLOWABLE UPLIFT	LOAD TRANSFER INFORMATION FOR USE WITH HOST STRUCTURE VERIFICATION ONLY — MAX. BASE MOMENT (M)	MAX. BASE SHEAR (V)	MAX. BASE UPLIFT (T)	MAX. BASE GRAVITY (C)
18 "	24 "	1728 in²	200.0 PSF	100.0 PSF	200.0 PSF	100.0 PSF	200.0 PSF	100.0 PSF	200.0 PSF	100.0 PSF	200.0 PSF	100.0 PSF	200.0 PSF	100.0 PSF	193.8 PSF	96.9 PSF	191.1 PSF	95.5 PSF	364.90 LB-FT	387.6 LB	1450.6 LB	1298.0 LB
24 "			200.0 PSF	100.0 PSF	200.0 PSF	100.0 PSF	200.0 PSF	100.0 PSF	200.0 PSF	100.0 PSF	181.4 PSF	90.7 PSF	181.4 PSF	90.7 PSF	136.1 PSF	68.0 PSF	136.1 PSF	68.0 PSF	327.80 LB-FT	272.2 LB	1180.8 LB	1114.9 LB
30 "			200.0 PSF	100.0 PSF	200.0 PSF	100.0 PSF	174.0 PSF	87.0 PSF	174.0 PSF	87.0 PSF	139.2 PSF	69.6 PSF	139.2 PSF	69.6 PSF	104.4 PSF	52.2 PSF	104.4 PSF	52.2 PSF	305.60 LB-FT	208.8 LB	1030.7 LB	1012.1 LB
18 "	30 "	2700 in²	149.7 PSF	74.8 PSF	149.7 PSF	74.8 PSF	149.7 PSF	74.8 PSF	149.7 PSF	74.8 PSF	149.7 PSF	74.8 PSF	149.7 PSF	74.8 PSF	124.0 PSF	62.0 PSF	119.4 PSF	59.7 PSF	364.90 LB-FT	387.6 LB	1567.0 LB	1414.3 LB
24 "			149.7 PSF	74.8 PSF	149.7 PSF	74.8 PSF	145.1 PSF	72.5 PSF	145.1 PSF	72.5 PSF	116.1 PSF	58.0 PSF	116.1 PSF	58.0 PSF	87.1 PSF	43.5 PSF	87.1 PSF	43.5 PSF	327.80 LB-FT	272.2 LB	1265.8 LB	1196.6 LB
30 "			133.6 PSF	66.8 PSF	133.6 PSF	66.8 PSF	111.3 PSF	55.6 PSF	111.3 PSF	55.6 PSF	89.1 PSF	44.5 PSF	89.1 PSF	44.5 PSF	66.8 PSF	33.4 PSF	66.8 PSF	33.4 PSF	305.60 LB-FT	208.8 LB	1095.6 LB	1074.8 LB
18 "	36 "	3888 in²	94.1 (114.8) PSF	57.4 PSF	94.1 (114.8) PSF	57.4 PSF	94.1 (114.8) PSF	57.4 PSF	94.1 (114.8) PSF	57.4 PSF	94.1 (114.8) PSF	57.4 PSF	94.1 (107.9) PSF	53.9 PSF	86.1 PSF	43.0 PSF	81.0 PSF	40.5 PSF	364.90 LB-FT	387.6 LB	1688.9 LB	1530.6 LB
24 "			94.1 (114.8) PSF	57.4 PSF	94.1 (114.8) PSF	57.4 PSF	94.1 (100.8) PSF	50.4 PSF	94.1 (100.8) PSF	50.4 PSF	80.6 PSF	40.3 PSF	80.6 PSF	40.3 PSF	60.4 PSF	30.2 PSF	60.4 PSF	30.2 PSF	327.80 LB-FT	272.2 LB	1347.5 LB	1278.2 LB
30 "			92.8 PSF	46.4 PSF	92.8 PSF	46.4 PSF	77.3 PSF	38.6 PSF	77.3 PSF	38.6 PSF	61.8 PSF	30.9 PSF	61.8 PSF	30.9 PSF	46.4 PSF	23.2 PSF	46.4 PSF	23.2 PSF	305.60 LB-FT	208.8 LB	1158.3 LB	1137.5 LB
18 "	42 "	5292 in²	63.1 (82.3) PSF	41.1 PSF	63.1 (82.3) PSF	41.1 PSF	63.1 (82.3) PSF	41.1 PSF	63.1 (82.3) PSF	41.1 PSF	63.1 (82.3) PSF	41.1 PSF	63.1 (77.4) PSF	38.7 PSF	63.1 (63.2) PSF	31.6 PSF	58.1 PSF	29.0 PSF	364.90 LB-FT	387.6 LB	1799.6 LB	1646.9 LB
24 "			63.1 (82.3) PSF	41.1 PSF	63.1 (82.3) PSF	41.1 PSF	63.1 (74) PSF	37.0 PSF	63.1 (74) PSF	37.0 PSF	59.2 PSF	29.6 PSF	59.2 PSF	29.6 PSF	44.4 PSF	22.2 PSF	44.4 PSF	22.2 PSF	327.80 LB-FT	272.2 LB	1429.1 LB	1359.9 LB
30 "			63.1 (68.1) PSF	34.0 PSF	63.1 (68.1) PSF	34.0 PSF	56.8 PSF	28.4 PSF	56.8 PSF	28.4 PSF	45.4 PSF	22.7 PSF	45.4 PSF	22.7 PSF	34.0 PSF	17.0 PSF	34.0 PSF	17.0 PSF	305.60 LB-FT	208.8 LB	1221.0 LB	1200.1 LB

20" MINIMUM STAND DEPTH: MAX FACE AREA (1152in² - 3528in²), FRAME QUANTITY (2-5 FRAMES)

STAND CLEAR HEIGHT	MAX MEAN UNIT HEIGHT	MAX FACE AREA	UNIT TO FRAME RATIO: MAX FACE AREA : 5 FRAMES — ANCHOR TYPE: 1 OR 4 — MAX ALLOWABLE LATERAL LOAD	MAX ALLOWABLE UPLIFT	ANCHORS TYPE: 2 OR 3 — MAX ALLOWABLE LATERAL LOAD	MAX ALLOWABLE UPLIFT	MAX FACE AREA : 4 FRAMES — ANCHOR TYPE: 1 OR 4 — MAX ALLOWABLE LATERAL LOAD	MAX ALLOWABLE UPLIFT	ANCHORS TYPE: 2 OR 3 — MAX ALLOWABLE LATERAL LOAD	MAX ALLOWABLE UPLIFT	MAX FACE AREA : 3 FRAMES — ANCHOR TYPE: 1 OR 4 — MAX ALLOWABLE LATERAL LOAD	MAX ALLOWABLE UPLIFT	ANCHORS TYPE: 2 OR 3 — MAX ALLOWABLE LATERAL LOAD	MAX ALLOWABLE UPLIFT	MAX FACE AREA : 2 FRAMES — ANCHOR TYPE: 1 OR 4 — MAX ALLOWABLE LATERAL LOAD	MAX ALLOWABLE UPLIFT	ANCHORS TYPE: 2 OR 3 — MAX ALLOWABLE LATERAL LOAD	MAX ALLOWABLE UPLIFT	LOAD TRANSFER INFORMATION FOR USE WITH HOST STRUCTURE VERIFICATION ONLY — MAX. BASE MOMENT (M)	MAX. BASE SHEAR (V)	MAX. BASE UPLIFT (T)	MAX. BASE GRAVITY (C)
18 "	24 "	1152 in²	200.0 PSF	100.0 PSF	200.0 PSF	100.0 PSF	200.0 PSF	100.0 PSF	200.0 PSF	100.0 PSF	200.0 PSF	100.0 PSF	200.0 PSF	100.0 PSF	193.8 PSF	96.9 PSF	191.1 PSF	95.5 PSF	364.90 LB-FT	387.6 LB	1450.6 LB	1298.0 LB
24 "			200.0 PSF	100.0 PSF	200.0 PSF	100.0 PSF	200.0 PSF	100.0 PSF	200.0 PSF	100.0 PSF	200.0 PSF	100.0 PSF	200.0 PSF	100.0 PSF	136.1 PSF	68.0 PSF	136.1 PSF	68.0 PSF	327.80 LB-FT	272.2 LB	1175.2 LB	1114.9 LB
30 "			200.0 PSF	100.0 PSF	200.0 PSF	100.0 PSF	200.0 PSF	100.0 PSF	200.0 PSF	100.0 PSF	156.6 PSF	78.3 PSF	156.6 PSF	78.3 PSF	104.4 PSF	52.2 PSF	104.4 PSF	52.2 PSF	305.60 LB-FT	208.8 LB	1029.2 LB	1012.1 LB
18 "	30 "	1800 in²	149.7 PSF	74.8 PSF	149.7 PSF	74.8 PSF	149.7 PSF	74.8 PSF	149.7 PSF	74.8 PSF	149.7 PSF	74.8 PSF	149.7 PSF	74.8 PSF	124.0 PSF	62.0 PSF	119.4 PSF	59.7 PSF	364.90 LB-FT	387.6 LB	1567.0 LB	1414.3 LB
24 "			149.7 PSF	74.8 PSF	149.7 PSF	74.8 PSF	149.7 PSF	74.8 PSF	149.7 PSF	74.8 PSF	130.6 PSF	65.3 PSF	130.6 PSF	65.3 PSF	87.1 PSF	43.5 PSF	87.1 PSF	43.5 PSF	327.80 LB-FT	272.2 LB	1264.3 LB	1196.6 LB
30 "			149.7 PSF	74.8 PSF	149.7 PSF	74.8 PSF	133.6 PSF	66.8 PSF	133.6 PSF	66.8 PSF	100.2 PSF	50.1 PSF	100.2 PSF	50.1 PSF	66.8 PSF	33.4 PSF	66.8 PSF	33.4 PSF	305.60 LB-FT	208.8 LB	1095.6 LB	1074.8 LB
18 "	36 "	2592 in²	94.1 (114.8) PSF	57.4 PSF	94.1 (114.8) PSF	57.4 PSF	94.1 (114.8) PSF	57.4 PSF	94.1 (114.8) PSF	57.4 PSF	94.1 (114.8) PSF	57.4 PSF	94.1 (114.8) PSF	57.4 PSF	86.1 PSF	43.0 PSF	81.0 PSF	40.5 PSF	364.90 LB-FT	387.6 LB	1683.3 LB	1530.6 LB
24 "			94.1 (114.8) PSF	57.4 PSF	94.1 (114.8) PSF	57.4 PSF	94.1 (114.8) PSF	57.4 PSF	94.1 (114.8) PSF	57.4 PSF	90.7 PSF	45.3 PSF	90.7 PSF	45.3 PSF	60.4 PSF	30.2 PSF	60.4 PSF	30.2 PSF	327.80 LB-FT	272.2 LB	1346.0 LB	1278.2 LB
30 "			94.1 (114.8) PSF	57.4 PSF	94.1 (114.8) PSF	57.4 PSF	92.8 PSF	46.4 PSF	92.8 PSF	46.4 PSF	69.6 PSF	34.8 PSF	69.6 PSF	34.8 PSF	46.4 PSF	23.2 PSF	46.4 PSF	23.2 PSF	305.60 LB-FT	208.8 LB	1158.3 LB	1137.5 LB
18 "	42 "	3528 in²	63.1 (82.3) PSF	41.1 PSF	63.1 (82.3) PSF	41.1 PSF	63.1 (82.3) PSF	41.1 PSF	63.1 (82.3) PSF	41.1 PSF	63.1 (82.3) PSF	41.1 PSF	63.1 (82.3) PSF	41.1 PSF	63.1 (63.2) PSF	31.6 PSF	58.1 PSF	29.0 PSF	364.90 LB-FT	387.6 LB	1799.6 LB	1646.9 LB
24 "			63.1 (82.3) PSF	41.1 PSF	63.1 (82.3) PSF	41.1 PSF	63.1 (82.3) PSF	41.1 PSF	63.1 (82.3) PSF	41.1 PSF	63.1 (66.6) PSF	33.3 PSF	63.1 (66.6) PSF	33.3 PSF	44.4 PSF	22.2 PSF	44.4 PSF	22.2 PSF	327.80 LB-FT	272.2 LB	1427.6 LB	1359.9 LB
30 "			63.1 (82.3) PSF	41.1 PSF	63.1 (82.3) PSF	41.1 PSF	63.1 (68.1) PSF	34.0 PSF	63.1 (68.1) PSF	34.0 PSF	51.1 PSF	25.5 PSF	51.1 PSF	25.5 PSF	34.0 PSF	17.0 PSF	34.0 PSF	17.0 PSF	305.60 LB-FT	208.8 LB	1221.0 LB	1200.1 LB

20" MINIMUM STAND DEPTH: MAX FACE AREA (576in² - 1764in²), FRAME QUANTITY (2-3 FRAMES)

STAND CLEAR HEIGHT	MAX MEAN UNIT HEIGHT	MAX FACE AREA	UNIT TO FRAME RATIO: MAX FACE AREA : 3 FRAMES — ANCHOR TYPE: 1 OR 4 — MAX ALLOWABLE LATERAL LOAD	MAX ALLOWABLE UPLIFT	ANCHOR TYPE: 2 OR 3 — MAX ALLOWABLE LATERAL LOAD	MAX ALLOWABLE UPLIFT	MAX FACE AREA : 2 FRAMES — ANCHOR TYPE: 1 OR 4 — MAX ALLOWABLE LATERAL LOAD	MAX ALLOWABLE UPLIFT	ANCHOR TYPE: 2 OR 3 — MAX ALLOWABLE LATERAL LOAD	MAX ALLOWABLE UPLIFT	LOAD TRANSFER INFORMATION FOR USE WITH HOST STRUCTURE VERIFICATION ONLY — MAX. BASE MOMENT (M)	MAX. BASE SHEAR (V)	MAX. BASE UPLIFT (T)	MAX. BASE GRAVITY (C)
18 "	24 "	576 in²	200.0 PSF	100.0 PSF	200.0 PSF	100.0 PSF	200.0 PSF	100.0 PSF	200.0 PSF	100.0 PSF	188.20 LB-FT	200.0 LB	748.7 LB	667.5 LB
24 "			200.0 PSF	100.0 PSF	200.0 PSF	100.0 PSF	200.0 PSF	100.0 PSF	200.0 PSF	100.0 PSF	240.90 LB-FT	200.0 LB	868.7 LB	787.5 LB
30 "			200.0 PSF	100.0 PSF	200.0 PSF	100.0 PSF	200.0 PSF	100.0 PSF	200.0 PSF	100.0 PSF	292.60 LB-FT	200.0 LB	988.7 LB	907.5 LB
18 "	30 "	900 in²	149.7 PSF	74.8 PSF	149.7 PSF	74.8 PSF	149.7 PSF	74.8 PSF	149.7 PSF	74.8 PSF	220.30 LB-FT	234.0 LB	948.3 LB	839.8 LB
24 "			149.7 PSF	74.8 PSF	149.7 PSF	74.8 PSF	149.7 PSF	74.8 PSF	149.7 PSF	74.8 PSF	281.90 LB-FT	234.0 LB	1088.7 LB	980.2 LB
30 "			149.7 PSF	74.8 PSF	149.7 PSF	74.8 PSF	133.6 PSF	66.8 PSF	133.6 PSF	66.8 PSF	305.60 LB-FT	208.8 LB	1095.6 LB	1007.3 LB
18 "	36 "	1296 in²	94.1 (114.8) PSF	57.4 PSF	94.1 (114.8) PSF	57.4 PSF	94.1 (114.8) PSF	57.4 PSF	94.1 (114.8) PSF	57.4 PSF	243.30 LB-FT	258.4 LB	1126.0 LB	998.0 LB
24 "			94.1 (114.8) PSF	57.4 PSF	94.1 (114.8) PSF	57.4 PSF	94.1 (114.8) PSF	57.4 PSF	94.1 (114.8) PSF	57.4 PSF	311.30 LB-FT	258.4 LB	1281.1 LB	1153.1 LB
30 "			94.1 (114.8) PSF	57.4 PSF	94.1 (114.8) PSF	57.4 PSF	92.8 PSF	46.4 PSF	92.8 PSF	46.4 PSF	305.60 LB-FT	208.8 LB	1158.3 LB	1070.0 LB
18 "	42 "	1764 in²	63.1 (82.3) PSF	41.1 PSF	63.1 (82.3) PSF	41.1 PSF	63.1 (82.3) PSF	41.1 PSF	63.1 (82.3) PSF	41.1 PSF	237.20 LB-FT	252.0 LB	1173.3 LB	1050.5 LB
24 "			63.1 (82.3) PSF	41.1 PSF	63.1 (82.3) PSF	41.1 PSF	63.1 (82.3) PSF	41.1 PSF	63.1 (82.3) PSF	41.1 PSF	303.60 LB-FT	252.0 LB	1324.6 LB	1201.7 LB
30 "			63.1 (82.3) PSF	41.1 PSF	63.1 (82.3) PSF	41.1 PSF	63.1 (68.1) PSF	34.0 PSF	63.1 (68.1) PSF	34.0 PSF	305.60 LB-FT	208.8 LB	1221.0 LB	1132.6 LB

PRODUCT REVISED
as complying with the Florida Building Code
NOA-No. 16-0601.01
Expiration Date 01/15/2019
By
Miami-Dade Product Control

DESIGN SCHEDULE NOTES:

1. MAXIMUM CALCULATED FACE AREA SHALL BE EQUAL TO OR LESS THAN THE MAXIMUM ALLOWABLE FACE AREA FOR EACH CONFIGURATION.
2. REFERENCE ANCHOR SCHEDULE FOR ANCHOR TYPES LISTED HEREIN.

30" MINIMUM STAND DEPTH: MAX FACE AREA (2880in² - 8820in²), FRAME QUANTITY (5-8 FRAMES)

STAND CLEAR HEIGHT	MAX MEAN UNIT HEIGHT	MAX FACE AREA	UNIT TO FRAME RATIO: MAX FACE AREA : 8 FRAMES — ANCHOR TYPE: 1 OR 4 — MAX ALLOWABLE LATERAL LOAD	MAX ALLOWABLE UPLIFT	ANCHORS TYPE: 2 OR 3 — MAX ALLOWABLE LATERAL LOAD	MAX ALLOWABLE UPLIFT	MAX FACE AREA : 7 FRAMES — ANCHOR TYPE: 1 OR 4 — MAX ALLOWABLE LATERAL LOAD	MAX ALLOWABLE UPLIFT	ANCHORS TYPE: 2 OR 3 — MAX ALLOWABLE LATERAL LOAD	MAX ALLOWABLE UPLIFT	MAX FACE AREA : 6 FRAMES — ANCHOR TYPE: 1 OR 4 — MAX ALLOWABLE LATERAL LOAD	MAX ALLOWABLE UPLIFT	ANCHORS TYPE: 2 OR 3 — MAX ALLOWABLE LATERAL LOAD	MAX ALLOWABLE UPLIFT	MAX FACE AREA : 5 FRAMES — ANCHOR TYPE: 1 OR 4 — MAX ALLOWABLE LATERAL LOAD	MAX ALLOWABLE UPLIFT	ANCHORS TYPE: 2 OR 3 — MAX ALLOWABLE LATERAL LOAD	MAX ALLOWABLE UPLIFT	LOAD TRANSFER INFORMATION FOR USE WITH HOST STRUCTURE VERIFICATION ONLY — MAX. BASE MOMENT (M)	MAX. BASE SHEAR (V)	MAX. BASE UPLIFT (T)	MAX. BASE GRAVITY (C)
18 "	24 "	2880 in²	200.0 PSF	100.0 PSF	200.0 PSF	100.0 PSF	200.0 PSF	100.0 PSF	200.0 PSF	100.0 PSF	200.0 PSF	100.0 PSF	200.0 PSF	100.0 PSF	200.0 PSF	100.0 PSF	200.0 PSF	100.0 PSF	401.80 LB-FT	400.0 LB	1057.5 LB	895.0 LB
24 "			200.0 PSF	100.0 PSF	200.0 PSF	100.0 PSF	200.0 PSF	100.0 PSF	200.0 PSF	100.0 PSF	180.0 PSF	90.0 PSF	180.0 PSF	90.0 PSF	150.0 PSF	75.0 PSF	150.0 PSF	75.0 PSF	383.50 LB-FT	300.0 LB	911.3 LB	825.0 LB
30 "			181.3 PSF	90.6 PSF	181.3 PSF	90.6 PSF	158.6 PSF	79.3 PSF	158.6 PSF	79.3 PSF	136.0 PSF	68.0 PSF	136.0 PSF	68.0 PSF	113.3 PSF	56.6 PSF	113.3 PSF	56.6 PSF	350.10 LB-FT	226.6 LB	779.2 LB	747.0 LB
18 "	30 "	4500 in²	181.5 PSF	90.7 PSF	181.5 PSF	90.7 PSF	181.5 PSF	90.7 PSF	179.1 PSF	89.5 PSF	167.8 PSF	83.9 PSF	153.6 PSF	76.8 PSF	139.8 PSF	69.9 PSF	128.1 PSF	64.0 PSF	439.20 LB-FT	437.1 LB	1249.0 LB	1053.0 LB
24 "			153.6 PSF	76.8 PSF	153.6 PSF	76.8 PSF	134.4 PSF	67.2 PSF	134.4 PSF	67.2 PSF	115.2 PSF	57.6 PSF	115.2 PSF	57.6 PSF	96.0 PSF	48.0 PSF	96.0 PSF	48.0 PSF	383.50 LB-FT	300.0 LB	976.0 LB	885.1 LB
30 "			116.0 PSF	58.0 PSF	116.0 PSF	58.0 PSF	101.5 PSF	50.7 PSF	101.5 PSF	50.7 PSF	87.0 PSF	43.5 PSF	87.0 PSF	43.5 PSF	72.5 PSF	36.2 PSF	72.5 PSF	36.2 PSF	350.10 LB-FT	226.6 LB	824.6 LB	792.3 LB
18 "	36 "	6480 in²	116.2 (155.4) PSF	77.7 PSF	116.2 (139.7) PSF	69.8 PSF	116.2 (136) PSF	68.0 PSF	116.2 (122.3) PSF	61.1 PSF	116.2 (116.5) PSF	58.2 PSF	104.9 PSF	52.4 PSF	97.1 PSF	48.5 PSF	87.5 PSF	43.7 PSF	439.20 LB-FT	437.1 LB	1341.1 LB	1140.4 LB
24 "			106.6 PSF	53.3 PSF	106.6 PSF	53.3 PSF	93.3 PSF	46.6 PSF	93.3 PSF	46.6 PSF	80.0 PSF	40.0 PSF	80.0 PSF	40.0 PSF	66.6 PSF	33.3 PSF	66.6 PSF	33.3 PSF	383.50 LB-FT	300.0 LB	1036.0 LB	945.1 LB
30 "			80.5 PSF	40.2 PSF	80.5 PSF	40.2 PSF	70.5 PSF	35.2 PSF	70.5 PSF	35.2 PSF	60.4 PSF	30.2 PSF	60.4 PSF	30.2 PSF	50.3 PSF	25.1 PSF	50.3 PSF	25.1 PSF	350.10 LB-FT	226.6 LB	869.9 LB	837.6 LB
18 "	42 "	8820 in²	79.1 (114.1) PSF	57.0 PSF	79.1 (101) PSF	50.5 PSF	79.1 (99.9) PSF	49.9 PSF	79.1 (88.4) PSF	44.2 PSF	79.1 (85.6) PSF	42.8 PSF	75.8 PSF	37.9 PSF	71.3 PSF	35.6 PSF	63.2 PSF	31.6 PSF	439.20 LB-FT	437.1 LB	1428.5 LB	1227.9 LB
24 "			78.3 PSF	39.1 PSF	78.3 PSF	39.1 PSF	68.5 PSF	34.2 PSF	68.5 PSF	34.2 PSF	58.7 PSF	29.3 PSF	58.7 PSF	29.3 PSF	48.9 PSF	24.4 PSF	48.9 PSF	24.4 PSF	383.50 LB-FT	300.0 LB	1096.0 LB	1005.1 LB
30 "			59.2 PSF	29.6 PSF	59.2 PSF	29.6 PSF	51.8 PSF	25.9 PSF	51.8 PSF	25.9 PSF	44.4 PSF	22.2 PSF	44.4 PSF	22.2 PSF	37.0 PSF	18.5 PSF	37.0 PSF	18.5 PSF	350.10 LB-FT	226.6 LB	915.2 LB	883.0 LB

FRANK L. BENNARDO, P.E.
PE0046549
STATE OF FLORIDA
06/23/2016
VALID FOR (1) JOB(S) ONLY
ONLY W/ ORIGINAL ENGINEER SEAL
ENGINEERING EXPRESS®
CORPORATE OFFICE:
160 SW 12th AVE, SUITE 214
DEERFIELD BEACH, FL 33442
P: (954) 354-0660 F: (954) 354-0443
E: HELLO@ENGINEERINGEXPRESS.COM
ENGINEERINGEXPRESS.COM
CERT OF AUTH #9885

MIAMI TECH, INC
3611 NW 74TH STREET
MIAMI, FL 33147
PHONE:(305) 693-7054 FAX:(305) 693-6125

ALUMINUM A/C STAND
HVHZ COMPLAINT

REMARKS	DRWN	CHKD	DATE
INIT ISSUE	KL	CL	01/10/07
REV. TELESCOPIC BOLTS	KL	CL	06/03/07
UPDATE PER '07 FBC	TSB	CL	09/30/08
UPDATE PER '10 FBC	CSL	TSB	05/10/12
REV. PER COMMENTS	CSL	TSB	08/16/12
FBC UPDATE	RWN	CSL	07/07/15
REV PER MD COMMENTS	RWN	FLB	05/07/16

THIS DOCUMENT IS THE PROPERTY OF ENGINEERING EXPRESS AND SHALL NOT BE REPRODUCED IN WHOLE OR IN PART WITHOUT THE WRITTEN PERMISSION OF THE ENGINEER. ALTERATIONS, ADDITIONS, HIGHLIGHTING, OR OTHER MARKINGS TO THIS DOCUMENT ARE NOT PERMITTED AND INVALIDATE EUOR CERTIFICATION.
COPYRIGHT ENGINEERING EXPRESS

15-2476

SCALE: NTS

PAGE DESCRIPTION:
COVER SHEET

06/23/2016 - 2:08pm gordond V:\Projects\15-2476 NOA Existing - Update 13-1017.09 for 2014 Florida Bldg Code-Project\WP\MD Revision (6-23-16) - 16-0601.01\15-2476m NOA Existing - Update 13-1017.09 for 2014 Florida Bldg Code.dwg

"STD" STAND DESIGN SCHEDULE CONTINUED

30" MINIMUM STAND DEPTH: MAX FACE AREA (2304in² - 7056in²), FRAME QUANTITY (4-7 FRAMES)

STAND CLEAR HEIGHT	MAX MEAN UNIT HEIGHT	MAX FACE AREA	UNIT TO FRAME RATIO: MAX FACE AREA : 7 FRAMES				MAX FACE AREA : 6 FRAMES				MAX FACE AREA : 5 FRAMES				MAX FACE AREA : 4 FRAMES				LOAD TRANSFER INFORMATION FOR USE WITH HOST STRUCTURE VERIFICATION ONLY			
			ANCHOR TYPE: 1 OR 4		ANCHORS TYPE: 2 OR 3		ANCHOR TYPE: 1 OR 4		ANCHORS TYPE: 2 OR 3		ANCHOR TYPE: 1 OR 4		ANCHORS TYPE: 2 OR 3		ANCHOR TYPE: 1 OR 4		ANCHORS TYPE: 2 OR 3		MAX. BASE MOMENT (M)	MAX. BASE SHEAR (V)	MAX. BASE UPLIFT (T)	MAX. BASE GRAVITY (C)
			MAX ALLOWABLE LATERAL LOAD	MAX ALLOWABLE UPLIFT	MAX ALLOWABLE LATERAL LOAD	MAX ALLOWABLE UPLIFT	MAX ALLOWABLE LATERAL LOAD	MAX ALLOWABLE UPLIFT	MAX ALLOWABLE LATERAL LOAD	MAX ALLOWABLE UPLIFT	MAX ALLOWABLE LATERAL LOAD	MAX ALLOWABLE UPLIFT	MAX ALLOWABLE LATERAL LOAD	MAX ALLOWABLE UPLIFT	MAX ALLOWABLE LATERAL LOAD	MAX ALLOWABLE UPLIFT	MAX ALLOWABLE LATERAL LOAD	MAX ALLOWABLE UPLIFT				
18 "	24 "	2304 in²	200.0 PSF	100.0 PSF	200.0 PSF	100.0 PSF	200.0 PSF	100.0 PSF	200.0 PSF	100.0 PSF	200.0 PSF	100.0 PSF	200.0 PSF	100.0 PSF	200.0 PSF	100.0 PSF	200.0 PSF	100.0 PSF	401.80 LB-FT	400.0 LB	1057.5 LB	895.0 LB
24 "			200.0 PSF	100.0 PSF	200.0 PSF	100.0 PSF	200.0 PSF	100.0 PSF	200.0 PSF	100.0 PSF	187.5 PSF	93.7 PSF	187.5 PSF	93.7 PSF	150.0 PSF	75.0 PSF	150.0 PSF	75.0 PSF	383.50 LB-FT	300.0 LB	912.1 LB	825.0 LB
30 "			198.3 PSF	99.1 PSF	198.3 PSF	99.1 PSF	170.0 PSF	85.0 PSF	170.0 PSF	85.0 PSF	141.6 PSF	70.8 PSF	141.6 PSF	70.8 PSF	113.3 PSF	56.6 PSF	113.3 PSF	56.6 PSF	350.10 LB-FT	226.6 LB	780.4 LB	747.0 LB
18 "	30 "	3600 in²	181.5 PSF	90.7 PSF	181.5 PSF	90.7 PSF	181.5 PSF	90.7 PSF	181.5 PSF	90.7 PSF	174.8 PSF	87.4 PSF	160.0 PSF	80.0 PSF	139.8 PSF	69.9 PSF	128.1 PSF	64.0 PSF	439.20 LB-FT	437.1 LB	1249.7 LB	1053.0 LB
24 "			168.0 PSF	84.0 PSF	168.0 PSF	84.0 PSF	144.0 PSF	72.0 PSF	144.0 PSF	72.0 PSF	120.0 PSF	60.0 PSF	120.0 PSF	60.0 PSF	96.0 PSF	48.0 PSF	96.0 PSF	48.0 PSF	383.50 LB-FT	300.0 LB	977.2 LB	885.1 LB
30 "			126.9 PSF	63.4 PSF	126.9 PSF	63.4 PSF	108.8 PSF	54.4 PSF	108.8 PSF	54.4 PSF	90.6 PSF	45.3 PSF	90.6 PSF	45.3 PSF	72.5 PSF	36.2 PSF	72.5 PSF	36.2 PSF	350.10 LB-FT	226.6 LB	825.8 LB	792.3 LB
18 "	36 "	5184 in²	116.2 (170) PSF	85.0 PSF	116.2 (152.8) PSF	76.4 PSF	116.2 (145.7) PSF	72.8 PSF	116.2 (131) PSF	65.5 PSF	116.2 (121.4) PSF	60.7 PSF	109.3 PSF	54.6 PSF	97.1 PSF	48.5 PSF	87.5 PSF	43.7 PSF	439.20 LB-FT	437.1 LB	1342.3 LB	1140.4 LB
24 "			116.2 (116.6) PSF	58.3 PSF	116.2 (116.6) PSF	58.3 PSF	100.0 PSF	50.0 PSF	100.0 PSF	50.0 PSF	83.3 PSF	41.6 PSF	83.3 PSF	41.6 PSF	66.6 PSF	33.3 PSF	66.6 PSF	33.3 PSF	383.50 LB-FT	300.0 LB	1037.2 LB	945.1 LB
30 "			88.1 PSF	44.0 PSF	88.1 PSF	44.0 PSF	75.5 PSF	37.7 PSF	75.5 PSF	37.7 PSF	62.9 PSF	31.4 PSF	62.9 PSF	31.4 PSF	50.3 PSF	25.1 PSF	50.3 PSF	25.1 PSF	350.10 LB-FT	226.6 LB	871.1 LB	837.6 LB
18 "	42 "	7056 in²	79.1 (124.9) PSF	62.4 PSF	79.1 (110.4) PSF	55.2 PSF	79.1 (107) PSF	53.5 PSF	79.1 (94.7) PSF	47.3 PSF	79.1 (89.2) PSF	44.6 PSF	78.9 PSF	39.4 PSF	71.3 PSF	35.6 PSF	63.2 PSF	31.6 PSF	439.20 LB-FT	437.1 LB	1429.8 LB	1227.9 LB
24 "			79.1 (85.7) PSF	42.8 PSF	79.1 (85.7) PSF	42.8 PSF	73.4 PSF	36.7 PSF	73.4 PSF	36.7 PSF	61.2 PSF	30.6 PSF	61.2 PSF	30.6 PSF	48.9 PSF	24.4 PSF	48.9 PSF	24.4 PSF	383.50 LB-FT	300.0 LB	1097.2 LB	1005.1 LB
30 "			64.7 PSF	32.3 PSF	64.7 PSF	32.3 PSF	55.5 PSF	27.7 PSF	55.5 PSF	27.7 PSF	46.2 PSF	23.1 PSF	46.2 PSF	23.1 PSF	37.0 PSF	18.5 PSF	37.0 PSF	18.5 PSF	350.10 LB-FT	226.6 LB	916.4 LB	883.0 LB

30" MINIMUM STAND DEPTH: MAX FACE AREA (1728in² - 5292in²), FRAME QUANTITY (3-6 FRAMES)

STAND CLEAR HEIGHT	MAX MEAN UNIT HEIGHT	MAX FACE AREA	UNIT TO FRAME RATIO: MAX FACE AREA : 6 FRAMES				MAX FACE AREA : 5 FRAMES				MAX FACE AREA : 4 FRAMES				MAX FACE AREA : 3 FRAMES				LOAD TRANSFER INFORMATION FOR USE WITH HOST STRUCTURE VERIFICATION ONLY			
			ANCHOR TYPE: 1 OR 4		ANCHORS TYPE: 2 OR 3		ANCHOR TYPE: 1 OR 4		ANCHORS TYPE: 2 OR 3		ANCHOR TYPE: 1 OR 4		ANCHORS TYPE: 2 OR 3		ANCHOR TYPE: 1 OR 4		ANCHORS TYPE: 2 OR 3		MAX. BASE MOMENT (M)	MAX. BASE SHEAR (V)	MAX. BASE UPLIFT (T)	MAX. BASE GRAVITY (C)
			MAX ALLOWABLE LATERAL LOAD	MAX ALLOWABLE UPLIFT	MAX ALLOWABLE LATERAL LOAD	MAX ALLOWABLE UPLIFT	MAX ALLOWABLE LATERAL LOAD	MAX ALLOWABLE UPLIFT	MAX ALLOWABLE LATERAL LOAD	MAX ALLOWABLE UPLIFT	MAX ALLOWABLE LATERAL LOAD	MAX ALLOWABLE UPLIFT	MAX ALLOWABLE LATERAL LOAD	MAX ALLOWABLE UPLIFT	MAX ALLOWABLE LATERAL LOAD	MAX ALLOWABLE UPLIFT	MAX ALLOWABLE LATERAL LOAD	MAX ALLOWABLE UPLIFT				
18 "	24 "	1728 in²	200.0 PSF	100.0 PSF	200.0 PSF	100.0 PSF	200.0 PSF	100.0 PSF	200.0 PSF	100.0 PSF	200.0 PSF	100.0 PSF	200.0 PSF	100.0 PSF	200.0 PSF	100.0 PSF	200.0 PSF	100.0 PSF	401.80 LB-FT	400.0 LB	1057.5 LB	895.0 LB
24 "			200.0 PSF	100.0 PSF	200.0 PSF	100.0 PSF	200.0 PSF	100.0 PSF	200.0 PSF	100.0 PSF	200.0 PSF	100.0 PSF	200.0 PSF	100.0 PSF	150.0 PSF	75.0 PSF	150.0 PSF	75.0 PSF	383.50 LB-FT	300.0 LB	913.1 LB	825.0 LB
30 "			200.0 PSF	100.0 PSF	200.0 PSF	100.0 PSF	188.8 PSF	94.4 PSF	188.8 PSF	94.4 PSF	151.1 PSF	75.5 PSF	151.1 PSF	75.5 PSF	113.3 PSF	56.6 PSF	113.3 PSF	56.6 PSF	350.10 LB-FT	226.6 LB	779.8 LB	747.0 LB
18 "	30 "	2700 in²	181.5 PSF	90.7 PSF	181.5 PSF	90.7 PSF	181.5 PSF	90.7 PSF	181.5 PSF	90.7 PSF	181.5 PSF	90.7 PSF	170.6 PSF	85.3 PSF	139.8 PSF	69.9 PSF	128.1 PSF	64.0 PSF	439.20 LB-FT	437.1 LB	1245.2 LB	1053.0 LB
24 "			181.5 PSF	90.7 PSF	181.5 PSF	90.7 PSF	160.0 PSF	80.0 PSF	160.0 PSF	80.0 PSF	128.0 PSF	64.0 PSF	128.0 PSF	64.0 PSF	96.0 PSF	48.0 PSF	96.0 PSF	48.0 PSF	383.50 LB-FT	300.0 LB	976.6 LB	885.1 LB
30 "			145.0 PSF	72.5 PSF	145.0 PSF	72.5 PSF	120.8 PSF	60.4 PSF	120.8 PSF	60.4 PSF	96.7 PSF	48.3 PSF	96.7 PSF	48.3 PSF	72.5 PSF	36.2 PSF	72.5 PSF	36.2 PSF	350.10 LB-FT	226.6 LB	827.4 LB	792.3 LB
18 "	36 "	3888 in²	116.2 (194.2) PSF	97.1 PSF	116.2 (174.6) PSF	87.3 PSF	116.2 (161.9) PSF	80.9 PSF	116.2 (145.5) PSF	72.7 PSF	116.2 (129.5) PSF	64.7 PSF	116.2 (116.5) PSF	58.2 PSF	97.1 PSF	48.5 PSF	87.5 PSF	43.7 PSF	439.20 LB-FT	437.1 LB	1343.9 LB	1140.4 LB
24 "			116.2 (133.3) PSF	66.6 PSF	116.2 (133.3) PSF	66.6 PSF	111.1 PSF	55.5 PSF	111.1 PSF	55.5 PSF	88.9 PSF	44.4 PSF	88.9 PSF	44.4 PSF	66.6 PSF	33.3 PSF	66.6 PSF	33.3 PSF	383.50 LB-FT	300.0 LB	1038.8 LB	945.1 LB
30 "			100.7 PSF	50.3 PSF	100.7 PSF	50.3 PSF	83.9 PSF	41.9 PSF	83.9 PSF	41.9 PSF	67.1 PSF	33.5 PSF	67.1 PSF	33.5 PSF	50.3 PSF	25.1 PSF	50.3 PSF	25.1 PSF	350.10 LB-FT	226.6 LB	872.7 LB	837.6 LB
18 "	42 "	5292 in²	79.1 (142.7) PSF	71.3 PSF	79.1 (126.2) PSF	63.1 PSF	79.1 (118.9) PSF	59.4 PSF	79.1 (105.2) PSF	52.6 PSF	79.1 (95.1) PSF	47.5 PSF	79.1 (84.2) PSF	42.1 PSF	71.3 PSF	35.6 PSF	63.2 PSF	31.6 PSF	439.20 LB-FT	437.1 LB	1431.4 LB	1227.9 LB
24 "			79.1 (97.9) PSF	48.9 PSF	79.1 (97.9) PSF	48.9 PSF	79.1 (81.6) PSF	40.8 PSF	79.1 (81.6) PSF	40.8 PSF	65.3 PSF	32.6 PSF	65.3 PSF	32.6 PSF	48.9 PSF	24.4 PSF	48.9 PSF	24.4 PSF	383.50 LB-FT	300.0 LB	1098.9 LB	1005.1 LB
30 "			74.0 PSF	37.0 PSF	74.0 PSF	37.0 PSF	61.6 PSF	30.8 PSF	61.6 PSF	30.8 PSF	49.3 PSF	24.6 PSF	49.3 PSF	24.6 PSF	37.0 PSF	18.5 PSF	37.0 PSF	18.5 PSF	350.10 LB-FT	226.6 LB	918.1 LB	883.0 LB

30" MINIMUM STAND DEPTH: MAX FACE AREA (1152in² - 3528in²), FRAME QUANTITY (2-5 FRAMES)

STAND CLEAR HEIGHT	MAX MEAN UNIT HEIGHT	MAX FACE AREA	UNIT TO FRAME RATIO: MAX FACE AREA : 5 FRAMES				MAX FACE AREA : 4 FRAMES				MAX FACE AREA : 3 FRAMES				MAX FACE AREA : 2 FRAMES				LOAD TRANSFER INFORMATION FOR USE WITH HOST STRUCTURE VERIFICATION ONLY			
			ANCHOR TYPE: 1 OR 4		ANCHORS TYPE: 2 OR 3		ANCHOR TYPE: 1 OR 4		ANCHORS TYPE: 2 OR 3		ANCHOR TYPE: 1 OR 4		ANCHORS TYPE: 2 OR 3		ANCHOR TYPE: 1 OR 4		ANCHORS TYPE: 2 OR 3		MAX. BASE MOMENT (M)	MAX. BASE SHEAR (V)	MAX. BASE UPLIFT (T)	MAX. BASE GRAVITY (C)
			MAX ALLOWABLE LATERAL LOAD	MAX ALLOWABLE UPLIFT	MAX ALLOWABLE LATERAL LOAD	MAX ALLOWABLE UPLIFT	MAX ALLOWABLE LATERAL LOAD	MAX ALLOWABLE UPLIFT	MAX ALLOWABLE LATERAL LOAD	MAX ALLOWABLE UPLIFT	MAX ALLOWABLE LATERAL LOAD	MAX ALLOWABLE UPLIFT	MAX ALLOWABLE LATERAL LOAD	MAX ALLOWABLE UPLIFT	MAX ALLOWABLE LATERAL LOAD	MAX ALLOWABLE UPLIFT	MAX ALLOWABLE LATERAL LOAD	MAX ALLOWABLE UPLIFT				
18 "	24 "	1152 in²	200.0 PSF	100.0 PSF	200.0 PSF	100.0 PSF	200.0 PSF	100.0 PSF	200.0 PSF	100.0 PSF	200.0 PSF	100.0 PSF	200.0 PSF	100.0 PSF	200.0 PSF	100.0 PSF	200.0 PSF	100.0 PSF	401.80 LB-FT	400.0 LB	1057.5 LB	895.0 LB
24 "			200.0 PSF	100.0 PSF	200.0 PSF	100.0 PSF	200.0 PSF	100.0 PSF	200.0 PSF	100.0 PSF	200.0 PSF	100.0 PSF	200.0 PSF	100.0 PSF	150.0 PSF	75.0 PSF	150.0 PSF	75.0 PSF	383.50 LB-FT	300.0 LB	907.6 LB	825.0 LB
30 "			200.0 PSF	100.0 PSF	200.0 PSF	100.0 PSF	200.0 PSF	100.0 PSF	200.0 PSF	100.0 PSF	170.0 PSF	85.0 PSF	170.0 PSF	85.0 PSF	113.3 PSF	56.6 PSF	113.3 PSF	56.6 PSF	350.10 LB-FT	226.6 LB	778.3 LB	747.0 LB
18 "	30 "	1800 in²	181.5 PSF	90.7 PSF	181.5 PSF	90.7 PSF	181.5 PSF	90.7 PSF	181.5 PSF	90.7 PSF	181.5 PSF	90.7 PSF	181.5 PSF	90.7 PSF	139.8 PSF	69.9 PSF	128.1 PSF	64.0 PSF	439.20 LB-FT	437.1 LB	1245.2 LB	1053.0 LB
24 "			181.5 PSF	90.7 PSF	181.5 PSF	90.7 PSF	181.5 PSF	90.7 PSF	181.5 PSF	90.7 PSF	144.0 PSF	72.0 PSF	144.0 PSF	72.0 PSF	96.0 PSF	48.0 PSF	96.0 PSF	48.0 PSF	383.50 LB-FT	300.0 LB	975.1 LB	885.1 LB
30 "			181.3 PSF	90.6 PSF	181.3 PSF	90.6 PSF	145.0 PSF	72.5 PSF	145.0 PSF	72.5 PSF	108.8 PSF	54.4 PSF	108.8 PSF	54.4 PSF	72.5 PSF	36.2 PSF	72.5 PSF	36.2 PSF	350.10 LB-FT	226.6 LB	829.6 LB	792.3 LB
18 "	36 "	2592 in²	116.2 (198.1) PSF	100.0 PSF	116.2 (198.1) PSF	100.0 PSF	116.2 (194.2) PSF	97.1 PSF	116.2 (174.6) PSF	87.3 PSF	116.2 (145.7) PSF	72.8 PSF	116.2 (131) PSF	65.5 PSF	97.1 PSF	48.5 PSF	87.5 PSF	43.7 PSF	439.20 LB-FT	437.1 LB	1343.9 LB	1140.4 LB
24 "			116.2 (166.6) PSF	83.3 PSF	116.2 (166.6) PSF	83.3 PSF	116.2 (133.3) PSF	66.6 PSF	116.2 (133.3) PSF	66.6 PSF	100.0 PSF	50.0 PSF	100.0 PSF	50.0 PSF	66.6 PSF	33.3 PSF	66.6 PSF	33.3 PSF	383.50 LB-FT	300.0 LB	1041.1 LB	945.1 LB
30 "			116.2 (125.9) PSF	62.9 PSF	116.2 (125.9) PSF	62.9 PSF	100.7 PSF	50.3 PSF	100.7 PSF	50.3 PSF	75.5 PSF	37.7 PSF	75.5 PSF	37.7 PSF	50.3 PSF	25.1 PSF	50.3 PSF	25.1 PSF	350.10 LB-FT	226.6 LB	875.0 LB	837.6 LB
18 "	42 "	3528 in²	79.1 (146.3) PSF	73.1 PSF	79.1 (146.3) PSF	73.1 PSF	79.1 (142.7) PSF	71.3 PSF	79.1 (126.2) PSF	63.1 PSF	79.1 (107) PSF	53.5 PSF	79.1 (94.7) PSF	47.3 PSF	71.3 PSF	35.6 PSF	63.2 PSF	31.6 PSF	439.20 LB-FT	437.1 LB	1431.4 LB	1227.9 LB
24 "			79.1 (122.4) PSF	61.2 PSF	79.1 (122.4) PSF	61.2 PSF	79.1 (97.9) PSF	48.9 PSF	79.1 (97.9) PSF	48.9 PSF	73.4 PSF	36.7 PSF	73.4 PSF	36.7 PSF	48.9 PSF	24.4 PSF	48.9 PSF	24.4 PSF	383.50 LB-FT	300.0 LB	1101.1 LB	1005.1 LB
30 "			79.1 (92.5) PSF	46.2 PSF	79.1 (92.5) PSF	46.2 PSF	74.0 PSF	37.0 PSF	74.0 PSF	37.0 PSF	55.5 PSF	27.7 PSF	55.5 PSF	27.7 PSF	37.0 PSF	18.5 PSF	37.0 PSF	18.5 PSF	350.10 LB-FT	226.6 LB	920.3 LB	883.0 LB

30" MINIMUM STAND DEPTH: MAX FACE AREA (576in² - 1764in²), FRAME QUANTITY (2-3 FRAMES)

STAND CLEAR HEIGHT	MAX MEAN UNIT HEIGHT	MAX FACE AREA	UNIT TO FRAME RATIO: MAX FACE AREA : 3 FRAMES				MAX FACE AREA : 2 FRAMES				LOAD TRANSFER INFORMATION FOR USE WITH HOST STRUCTURE VERIFICATION ONLY			
			ANCHOR TYPE: 1 OR 4		ANCHOR TYPE: 2 OR 3		ANCHOR TYPE: 1 OR 4		ANCHOR TYPE: 2 OR 3		MAX. BASE MOMENT (M)	MAX. BASE SHEAR (V)	MAX. BASE UPLIFT (T)	MAX. BASE GRAVITY (C)
			MAX ALLOWABLE LATERAL LOAD	MAX ALLOWABLE UPLIFT	MAX ALLOWABLE LATERAL LOAD	MAX ALLOWABLE UPLIFT	MAX ALLOWABLE LATERAL LOAD	MAX ALLOWABLE UPLIFT	MAX ALLOWABLE LATERAL LOAD	MAX ALLOWABLE UPLIFT				
18 "	24 "	576 in²	200.0 PSF	100.0 PSF	200.0 PSF	100.0 PSF	200.0 PSF	100.0 PSF	200.0 PSF	100.0 PSF	200.90 LB-FT	200.0 LB	528.7 LB	447.5 LB
24 "			200.0 PSF	100.0 PSF	200.0 PSF	100.0 PSF	200.0 PSF	100.0 PSF	200.0 PSF	100.0 PSF	255.60 LB-FT	200.0 LB	608.7 LB	527.5 LB
30 "			200.0 PSF	100.0 PSF	200.0 PSF	100.0 PSF	200.0 PSF	100.0 PSF	200.0 PSF	100.0 PSF	308.90 LB-FT	200.0 LB	688.7 LB	607.5 LB
18 "	30 "	900 in²	181.5 PSF	90.7 PSF	181.5 PSF	90.7 PSF	181.5 PSF	90.7 PSF	181.5 PSF	90.7 PSF	284.90 LB-FT	283.6 LB	811.3 LB	663.1 LB
24 "			181.5 PSF	90.7 PSF	181.5 PSF	90.7 PSF	181.5 PSF	90.7 PSF	181.5 PSF	90.7 PSF	362.50 LB-FT	283.6 LB	924.7 LB	776.6LB
30 "			181.5 PSF	90.7 PSF	181.5 PSF	90.7 PSF	145.0 PSF	72.5 PSF	145.0 PSF	72.5 PSF	350.10 LB-FT	226.6 LB	827.4 LB	724.8 LB
18 "	36 "	1296 in²	116.2 (198.1) PSF	100.0 PSF	116.2 (198.1) PSF	100.0 PSF	116.2 (194.2) PSF	97.1 PSF	116.2 (174.6) PSF	87.3 PSF	439.20 LB-FT	437.1 LB	1343.9 LB	1072.9 LB
24 "			116.2 (198.1) PSF	100.0 PSF	116.2 (198.1) PSF	100.0 PSF	116.2 (133.3) PSF	66.6 PSF	116.2 (133.3) PSF	66.6 PSF	383.50 LB-FT	300.0 LB	1042.5 LB	877.6 LB
30 "			116.2 (151.1) PSF	75.5 PSF	116.2 (151.1) PSF	75.5 PSF	100.7 PSF	50.3 PSF	100.7 PSF	50.3 PSF	350.10 LB-FT	226.6 LB	876.5 LB	770.1LB
18 "	42 "	1764 in²	79.1 (146.3) PSF	73.1 PSF	79.1 (146.3) PSF	73.1 PSF	79.1 (142.7) PSF	71.3 PSF	79.1 (126.2) PSF	63.1 PSF	439.20 LB-FT	437.1 LB	1431.4 LB	1160.4 LB
24 "			79.1 (146.3) PSF	73.1 PSF	79.1 (146.3) PSF	73.1 PSF	79.1 (97.9) PSF	48.9 PSF	79.1 (97.9) PSF	48.9 PSF	383.50 LB-FT	300.0 LB	1098.9 LB	937.6 LB
30 "			79.1 (111) PSF	55.5 PSF	79.1 (111) PSF	55.5 PSF	74.0 PSF	37.0 PSF	74.0 PSF	37.0 PSF	350.10 LB-FT	226.6 LB	921.8 LB	815.5 LB

PRODUCT REVISED
as complying with the Florida Building Code
NOA-No. 16-0601.01
Expiration Date 01/15/2019
By
Miami-Dade Product Control

DESIGN SCHEDULE NOTES:

1. MAXIMUM CALCULATED FACE AREA SHALL BE EQUAL TO OR LESS THAN THE MAXIMUM ALLOWABLE FACE AREA FOR EACH CONFIGURATION.
2. REFERENCE ANCHOR SCHEDULE FOR ANCHOR TYPES LISTED HEREIN.

FRANK L. BENNARDO, P.E.
PE0046549
06/23/2016
VALID FOR (1) USE ONLY W/ ORIGINAL ENGINEER SEAL

ENGINEERING EXPRESS®
CORPORATE OFFICE:
160 SW 12th AVE, SUITE 106
DEERFIELD BEACH, FL 33442
P: (954) 354-0660 F: (954) 354-0443
E: HELLO@ENGINEERINGEXPRESS.COM
ENGINEERINGEXPRESS.COM
CERT OF AUTH #9885

MIAMI TECH, INC
3611 NW 74TH STREET
MIAMI, FL 33147
PHONE:(305) 693-7054 FAX:(305) 693-6125

ALUMINUM A/C STAND
HVHZ COMPLAINT

REMARKS	DRWN	CHKD	DATE
INIT ISSUE	KL	CL	01/10/07
REV, TELESCOPIC BOLTS	KL	CL	05/03/07
UPDATE PER '07 FBC	TSB	CL	09/30/08
UPDATE PER '10 FBC	CSL	TSB	05/10/12
REV. PER COMMENTS	CSL	TSB	08/16/12
FBC UPDATE	RWN	CSL	07/07/15
REV PER MD COMMENTS	RWN	FLB	05/07/16

THIS DOCUMENT IS THE PROPERTY OF ENGINEERING EXPRESS AND SHALL NOT BE REPRODUCED IN WHOLE OR PART WITHOUT WRITTEN CONSENT OF THE CERTIFYING ENGINEER. ALTERATIONS, ADDITIONS, HIGHLIGHTING, OR OTHER MARKINGS TO THIS DOCUMENT ARE NOT PERMITTED AND INVALIDATE OUR CERTIFICATION.
COPYRIGHT ENGINEERING EXPRESS

15-2476

SCALE: NTS -

PAGE DESCRIPTION:
COVER SHEET

V:\Project\15-2476 NOA Existing - Update 13-1017.09 for 2014 Florida Bldg Code-Project\WPMD Revision (6-23-16) - 16-0601.01\15-2476m NOA Existing - Update 13-1017.09 for 2014 Florida Bldg Code.dwg
06/23/2016 - 2:08pm gordond

"HD" STAND DESIGN SCHEDULE

36" MINIMUM STAND DEPTH: MAX FACE AREA (2880in² - 8820in²), FRAME QUANTITY (5-8 FRAMES)

STAND CLEAR HEIGHT	MAX MEAN UNIT HEIGHT	MAX FACE AREA	UNIT TO FRAME RATIO: MAX FACE AREA : 8 FRAMES				MAX FACE AREA : 7 FRAMES				MAX FACE AREA : 6 FRAMES				MAX FACE AREA : 5 FRAMES				LOAD TRANSFER INFORMATION FOR USE WITH HOST STRUCTURE VERIFICATION ONLY			
			ANCHOR TYPE: 1 OR 4		ANCHORS TYPE: 2 OR 3		ANCHOR TYPE: 1 OR 4		ANCHORS TYPE: 2 OR 3		ANCHOR TYPE: 1 OR 4		ANCHORS TYPE: 2 OR 3		ANCHOR TYPE: 1 OR 4		ANCHORS TYPE: 2 OR 3					
			MAX ALLOWABLE LATERAL LOAD	MAX ALLOWABLE UPLIFT	MAX ALLOWABLE LATERAL LOAD	MAX ALLOWABLE UPLIFT	MAX ALLOWABLE LATERAL LOAD	MAX ALLOWABLE UPLIFT	MAX ALLOWABLE LATERAL LOAD	MAX ALLOWABLE UPLIFT	MAX ALLOWABLE LATERAL LOAD	MAX ALLOWABLE UPLIFT	MAX ALLOWABLE LATERAL LOAD	MAX ALLOWABLE UPLIFT	MAX ALLOWABLE LATERAL LOAD	MAX ALLOWABLE UPLIFT	MAX ALLOWABLE LATERAL LOAD	MAX ALLOWABLE UPLIFT	MAX. BASE MOMENT (M)	MAX. BASE SHEAR (V)	MAX. BASE UPLIFT (T)	MAX. BASE GRAVITY (C)
18 "	24 "	2880 in²	200.0 PSF	100.0 PSF	200.0 PSF	100.0 PSF	200.0 PSF	100.0 PSF	200.0 PSF	100.0 PSF	200.0 PSF	100.0 PSF	200.0 PSF	100.0 PSF	200.0 PSF	100.0 PSF	200.0 PSF	100.0 PSF	395.60 LB-FT	400.0 LB	910.8 LB	748.3 LB
24 "			200.0 PSF	100.0 PSF	200.0 PSF	100.0 PSF	200.0 PSF	100.0 PSF	200.0 PSF	100.0 PSF	200.0 PSF	100.0 PSF	200.0 PSF	100.0 PSF	172.2 PSF	86.1 PSF	172.2 PSF	86.1 PSF	433.90 LB-FT	344.4 LB	895.9 LB	777.9 LB
30 "			200.0 PSF	100.0 PSF	200.0 PSF	100.0 PSF	182.8 PSF	91.4 PSF	182.8 PSF	91.4 PSF	156.7 PSF	78.3 PSF	156.7 PSF	78.3 PSF	130.6 PSF	65.3 PSF	130.6 PSF	65.3 PSF	398.10 LB-FT	261.2 LB	767.5 LB	709.6 LB
18 "	30 "	4500 in²	181.5 PSF	90.7 PSF	181.5 PSF	90.7 PSF	181.5 PSF	90.7 PSF	181.5 PSF	90.7 PSF	178.1 PSF	89.0 PSF	160.2 PSF	80.1 PSF	148.4 PSF	74.2 PSF	133.6 PSF	66.8 PSF	458.80 LB-FT	463.8 LB	1140.9 LB	923.6 LB
24 "			176.3 PSF	88.1 PSF	176.3 PSF	88.1 PSF	154.3 PSF	77.1 PSF	154.3 PSF	77.1 PSF	132.2 PSF	66.1 PSF	132.2 PSF	66.1 PSF	110.2 PSF	55.1 PSF	110.2 PSF	55.1 PSF	433.90 LB-FT	344.4 LB	961.8 LB	835.3 LB
30 "			133.7 PSF	66.8 PSF	133.7 PSF	66.8 PSF	117.0 PSF	58.5 PSF	117.0 PSF	58.5 PSF	100.3 PSF	50.1 PSF	100.3 PSF	50.1 PSF	83.5 PSF	41.7 PSF	83.5 PSF	41.7 PSF	398.10 LB-FT	261.2 LB	813.1 LB	753.2 LB
18 "	36 "	6480 in²	126 (164.9) PSF	82.4 PSF	126 (146) PSF	73.0 PSF	126 (144.3) PSF	72.1 PSF	126 (127.8) PSF	63.9 PSF	123.7 PSF	61.8 PSF	109.6 PSF	54.8 PSF	103.0 PSF	51.5 PSF	91.4 PSF	45.7 PSF	458.80 LB-FT	463.8 LB	1222.9 LB	1000.9 LB
24 "			122.4 PSF	61.2 PSF	122.4 PSF	61.2 PSF	107.1 PSF	53.5 PSF	107.1 PSF	53.5 PSF	91.8 PSF	45.9 PSF	91.8 PSF	45.9 PSF	76.5 PSF	38.2 PSF	76.5 PSF	38.2 PSF	433.90 LB-FT	344.4 LB	1019.2 LB	892.7 LB
30 "			92.8 PSF	46.4 PSF	92.8 PSF	46.4 PSF	81.2 PSF	40.6 PSF	81.2 PSF	40.6 PSF	69.6 PSF	34.8 PSF	69.6 PSF	34.8 PSF	58.0 PSF	29.0 PSF	58.0 PSF	29.0 PSF	398.10 LB-FT	261.2 LB	856.6 LB	796.7LB
18 "	42 "	8820 in²	86.5 (121.1) PSF	60.5 PSF	86.5 (105.7) PSF	52.8 PSF	86.5 (106) PSF	53.0 PSF	86.5 (92.5) PSF	46.2 PSF	86.5 (90.8) PSF	45.4 PSF	79.4 PSF	39.7 PSF	75.7 PSF	37.8 PSF	66.2 PSF	33.1 PSF	458.80 LB-FT	463.8 LB	1300.2 LB	1078.2 LB
24 "			86.5 (89.9) PSF	44.9 PSF	86.5 (89.9) PSF	44.9 PSF	78.7 PSF	39.3 PSF	78.7 PSF	39.3 PSF	67.4 PSF	33.7 PSF	67.4 PSF	33.7 PSF	56.2 PSF	28.1 PSF	56.2 PSF	28.1 PSF	433.90 LB-FT	344.4 LB	1076.6 LB	950.1 LB
30 "			68.2 PSF	34.1 PSF	68.2 PSF	34.1 PSF	59.7 PSF	29.8 PSF	59.7 PSF	29.8 PSF	51.1 PSF	25.5 PSF	51.1 PSF	25.5 PSF	42.6 PSF	21.3 PSF	42.6 PSF	21.3 PSF	398.10 LB-FT	261.2 LB	900.2 LB	840.2 LB

36" MINIMUM STAND DEPTH: MAX FACE AREA (2304in² - 7056in²), FRAME QUANTITY (4-7 FRAMES)

STAND CLEAR HEIGHT	MAX MEAN UNIT HEIGHT	MAX FACE AREA	UNIT TO FRAME RATIO: MAX FACE AREA : 7 FRAMES				MAX FACE AREA : 6 FRAMES				MAX FACE AREA : 5 FRAMES				MAX FACE AREA : 4 FRAMES				LOAD TRANSFER INFORMATION FOR USE WITH HOST STRUCTURE VERIFICATION ONLY			
			ANCHOR TYPE: 1 OR 4		ANCHORS TYPE: 2 OR 3		ANCHOR TYPE: 1 OR 4		ANCHORS TYPE: 2 OR 3		ANCHOR TYPE: 1 OR 4		ANCHORS TYPE: 2 OR 3		ANCHOR TYPE: 1 OR 4		ANCHORS TYPE: 2 OR 3					
			MAX ALLOWABLE LATERAL LOAD	MAX ALLOWABLE UPLIFT	MAX ALLOWABLE LATERAL LOAD	MAX ALLOWABLE UPLIFT	MAX ALLOWABLE LATERAL LOAD	MAX ALLOWABLE UPLIFT	MAX ALLOWABLE LATERAL LOAD	MAX ALLOWABLE UPLIFT	MAX ALLOWABLE LATERAL LOAD	MAX ALLOWABLE UPLIFT	MAX ALLOWABLE LATERAL LOAD	MAX ALLOWABLE UPLIFT	MAX ALLOWABLE LATERAL LOAD	MAX ALLOWABLE UPLIFT	MAX ALLOWABLE LATERAL LOAD	MAX ALLOWABLE UPLIFT	MAX. BASE MOMENT (M)	MAX. BASE SHEAR (V)	MAX. BASE UPLIFT (T)	MAX. BASE GRAVITY (C)
18 "	24 "	2304 in²	200.0 PSF	100.0 PSF	200.0 PSF	100.0 PSF	200.0 PSF	100.0 PSF	200.0 PSF	100.0 PSF	200.0 PSF	100.0 PSF	200.0 PSF	100.0 PSF	200.0 PSF	100.0 PSF	200.0 PSF	100.0 PSF	395.60 LB-FT	400.0 LB	910.8 LB	748.3 LB
24 "			200.0 PSF	100.0 PSF	200.0 PSF	100.0 PSF	200.0 PSF	100.0 PSF	200.0 PSF	100.0 PSF	200.0 PSF	100.0 PSF	200.0 PSF	100.0 PSF	172.2 PSF	86.1 PSF	172.2 PSF	86.1 PSF	433.90 LB-FT	344.4 LB	895.9 LB	777.9 LB
30 "			200.0 PSF	100.0 PSF	200.0 PSF	100.0 PSF	195.9 PSF	97.9 PSF	195.9 PSF	97.9 PSF	163.2 PSF	81.6 PSF	163.2 PSF	81.6 PSF	130.6 PSF	65.3 PSF	130.6 PSF	65.3 PSF	398.10 LB-FT	261.2 LB	768.6 LB	709.6 LB
18 "	30 "	3600 in²	181.5 PSF	90.7 PSF	181.5 PSF	90.7 PSF	181.5 PSF	90.7 PSF	181.5 PSF	90.7 PSF	181.5 PSF	90.7 PSF	166.8 PSF	83.4 PSF	148.4 PSF	74.2 PSF	133.6 PSF	66.8 PSF	458.80 LB-FT	463.8 LB	1137.2 LB	923.6 LB
24 "			181.5 PSF	90.7 PSF	181.5 PSF	90.7 PSF	165.3 PSF	82.6 PSF	165.3 PSF	82.6 PSF	137.7 PSF	68.8 PSF	137.7 PSF	68.8 PSF	110.2 PSF	55.1 PSF	110.2 PSF	55.1 PSF	433.90 LB-FT	344.4 LB	960.8 LB	835.3 LB
30 "			146.2 PSF	73.1 PSF	146.2 PSF	73.1 PSF	125.3 PSF	62.6 PSF	125.3 PSF	62.6 PSF	104.4 PSF	52.2 PSF	104.4 PSF	52.2 PSF	83.5 PSF	41.7 PSF	83.5 PSF	41.7 PSF	398.10 LB-FT	261.2 LB	814.3 LB	753.2 LB
18 "	36 "	5184 in²	126 (180.3) PSF	90.1 PSF	126 (159.7) PSF	79.8 PSF	126 (154.6) PSF	77.3 PSF	126 (136.9) PSF	68.4 PSF	126 (128.8) PSF	64.4 PSF	114.2 PSF	57.1 PSF	103.0 PSF	51.5 PSF	91.4 PSF	45.7 PSF	458.80 LB-FT	463.8 LB	1224.1 LB	1000.9 LB
24 "			126 (133.9) PSF	66.9 PSF	126 (133.9) PSF	66.9 PSF	114.8 PSF	57.4 PSF	114.8 PSF	57.4 PSF	95.6 PSF	47.8 PSF	95.6 PSF	47.8 PSF	76.5 PSF	38.2 PSF	76.5 PSF	38.2 PSF	433.90 LB-FT	344.4 LB	1020.4 LB	892.7 LB
30 "			101.5 PSF	50.7 PSF	101.5 PSF	50.7 PSF	87.0 PSF	43.5 PSF	87.0 PSF	43.5 PSF	72.5 PSF	36.2 PSF	72.5 PSF	36.2 PSF	58.0 PSF	29.0 PSF	58.0 PSF	29.0 PSF	398.10 LB-FT	261.2 LB	857.8 LB	796.7LB
18 "	42 "	7056 in²	86.5 (132.5) PSF	66.2 PSF	86.5 (115.6) PSF	57.8 PSF	86.5 (113.6) PSF	56.8 PSF	86.5 (99.1) PSF	49.5 PSF	86.5 (94.6) PSF	47.3 PSF	82.7 PSF	41.3 PSF	75.7 PSF	37.8 PSF	66.2 PSF	33.1 PSF	458.80 LB-FT	463.8 LB	1301.4 LB	1078.2 LB
24 "			86.5 (98.4) PSF	49.2 PSF	86.5 (98.4) PSF	49.2 PSF	84.3 PSF	42.1 PSF	84.3 PSF	42.1 PSF	70.2 PSF	35.1 PSF	70.2 PSF	35.1 PSF	56.2 PSF	28.1 PSF	56.2 PSF	28.1 PSF	433.90 LB-FT	344.4 LB	1077.8 LB	950.1 LB
30 "			74.6 PSF	37.3 PSF	74.6 PSF	37.3 PSF	63.9 PSF	31.9 PSF	63.9 PSF	31.9 PSF	53.3 PSF	26.6 PSF	53.3 PSF	26.6 PSF	42.6 PSF	21.3 PSF	42.6 PSF	21.3 PSF	398.10 LB-FT	261.2 LB	901.4 LB	840.2 LB

36" MINIMUM STAND DEPTH: MAX FACE AREA (1728in² - 5292in²), FRAME QUANTITY (3-6 FRAMES)

STAND CLEAR HEIGHT	MAX MEAN UNIT HEIGHT	MAX FACE AREA	UNIT TO FRAME RATIO: MAX FACE AREA : 6 FRAMES				MAX FACE AREA : 5 FRAMES				MAX FACE AREA : 4 FRAMES				MAX FACE AREA : 3 FRAMES				LOAD TRANSFER INFORMATION FOR USE WITH HOST STRUCTURE VERIFICATION ONLY			
			ANCHOR TYPE: 1 OR 4		ANCHORS TYPE: 2 OR 3		ANCHOR TYPE: 1 OR 4		ANCHORS TYPE: 2 OR 3		ANCHOR TYPE: 1 OR 4		ANCHORS TYPE: 2 OR 3		ANCHOR TYPE: 1 OR 4		ANCHORS TYPE: 2 OR 3					
			MAX ALLOWABLE LATERAL LOAD	MAX ALLOWABLE UPLIFT	MAX ALLOWABLE LATERAL LOAD	MAX ALLOWABLE UPLIFT	MAX ALLOWABLE LATERAL LOAD	MAX ALLOWABLE UPLIFT	MAX ALLOWABLE LATERAL LOAD	MAX ALLOWABLE UPLIFT	MAX ALLOWABLE LATERAL LOAD	MAX ALLOWABLE UPLIFT	MAX ALLOWABLE LATERAL LOAD	MAX ALLOWABLE UPLIFT	MAX ALLOWABLE LATERAL LOAD	MAX ALLOWABLE UPLIFT	MAX ALLOWABLE LATERAL LOAD	MAX ALLOWABLE UPLIFT	MAX. BASE MOMENT (M)	MAX. BASE SHEAR (V)	MAX. BASE UPLIFT (T)	MAX. BASE GRAVITY (C)
18 "	24 "	1728 in²	200.0 PSF	100.0 PSF	200.0 PSF	100.0 PSF	200.0 PSF	100.0 PSF	200.0 PSF	100.0 PSF	200.0 PSF	100.0 PSF	200.0 PSF	100.0 PSF	200.0 PSF	100.0 PSF	200.0 PSF	100.0 PSF	395.60 LB-FT	400.0 LB	910.8 LB	748.3 LB
24 "			200.0 PSF	100.0 PSF	200.0 PSF	100.0 PSF	200.0 PSF	100.0 PSF	200.0 PSF	100.0 PSF	200.0 PSF	100.0 PSF	200.0 PSF	100.0 PSF	172.2 PSF	86.1 PSF	172.2 PSF	86.1 PSF	433.90 LB-FT	344.4 LB	895.9 LB	777.9 LB
30 "			200.0 PSF	100.0 PSF	200.0 PSF	100.0 PSF	200.0 PSF	100.0 PSF	200.0 PSF	100.0 PSF	174.1 PSF	87.0 PSF	174.1 PSF	87.0 PSF	130.6 PSF	65.3 PSF	130.6 PSF	65.3 PSF	398.10 LB-FT	261.2 LB	766.7 LB	709.6 LB
18 "	30 "	2700 in²	181.5 PSF	90.7 PSF	181.5 PSF	90.7 PSF	181.5 PSF	90.7 PSF	181.5 PSF	90.7 PSF	181.5 PSF	90.7 PSF	177.9 PSF	88.9 PSF	148.4 PSF	74.2 PSF	133.6 PSF	66.8 PSF	458.80 LB-FT	463.8 LB	1137.2 LB	923.6 LB
24 "			181.5 PSF	90.7 PSF	181.5 PSF	90.7 PSF	181.5 PSF	90.7 PSF	181.5 PSF	90.7 PSF	146.9 PSF	73.4 PSF	146.9 PSF	73.4 PSF	110.2 PSF	55.1 PSF	110.2 PSF	55.1 PSF	433.90 LB-FT	344.4 LB	958.9 LB	835.3 LB
30 "			167.1 PSF	83.5 PSF	167.1 PSF	83.5 PSF	139.3 PSF	69.6 PSF	139.3 PSF	69.6 PSF	111.4 PSF	55.7 PSF	111.4 PSF	55.7 PSF	83.5 PSF	41.7 PSF	83.5 PSF	41.7 PSF	398.10 LB-FT	261.2 LB	815.9 LB	753.2 LB
18 "	36 "	3888 in²	126 (200) PSF	100.0 PSF	126 (182.4) PSF	91.2 PSF	126 (171.8) PSF	85.9 PSF	126 (152.1) PSF	76.0 PSF	126 (137.4) PSF	68.7 PSF	121.7 PSF	60.8 PSF	103.0 PSF	51.5 PSF	91.4 PSF	45.7 PSF	458.80 LB-FT	463.8 LB	1223.5 LB	1000.9 LB
24 "			126 (153) PSF	76.5 PSF	126 (153) PSF	76.5 PSF	126 (127.5) PSF	63.7 PSF	126 (127.5) PSF	63.7 PSF	102.0 PSF	51.0 PSF	102.0 PSF	51.0 PSF	76.5 PSF	38.2 PSF	76.5 PSF	38.2 PSF	433.90 LB-FT	344.4 LB	1022.0 LB	892.7 LB
30 "			116.0 PSF	58.0 PSF	116.0 PSF	58.0 PSF	96.7 PSF	48.3 PSF	96.7 PSF	48.3 PSF	77.3 PSF	38.6 PSF	77.3 PSF	38.6 PSF	58.0 PSF	29.0 PSF	58.0 PSF	29.0 PSF	398.10 LB-FT	261.2 LB	859.4 LB	796.7LB
18 "	42 "	5292 in²	86.5 (151.4) PSF	75.7 PSF	86.5 (132.1) PSF	66.0 PSF	86.5 (126.2) PSF	63.1 PSF	86.5 (110.1) PSF	55.0 PSF	86.5 (100.9) PSF	50.4 PSF	86.5 (88.2) PSF	44.1 PSF	75.7 PSF	37.8 PSF	66.2 PSF	33.1 PSF	458.80 LB-FT	463.8 LB	1303.0 LB	1078.2 LB
24 "			86.5 (112.4) PSF	56.2 PSF	86.5 (112.4) PSF	56.2 PSF	86.5 (93.7) PSF	46.8 PSF	86.5 (93.7) PSF	46.8 PSF	74.9 PSF	37.4 PSF	74.9 PSF	37.4 PSF	56.2 PSF	28.1 PSF	56.2 PSF	28.1 PSF	433.90 LB-FT	344.4 LB	1079.4 LB	950.1 LB
30 "			85.2 PSF	42.6 PSF	85.2 PSF	42.6 PSF	71.0 PSF	35.5 PSF	71.0 PSF	35.5 PSF	56.8 PSF	28.4 PSF	56.8 PSF	28.4 PSF	42.6 PSF	21.3 PSF	42.6 PSF	21.3 PSF	398.10 LB-FT	261.2 LB	903.0 LB	840.2 LB

36" MINIMUM STAND DEPTH: MAX FACE AREA (1152in² - 3528in²), FRAME QUANTITY (2-5 FRAMES)

STAND CLEAR HEIGHT	MAX MEAN UNIT HEIGHT	MAX FACE AREA	UNIT TO FRAME RATIO: MAX FACE AREA : 5 FRAMES				MAX FACE AREA : 4 FRAMES				MAX FACE AREA : 3 FRAMES				MAX FACE AREA : 2 FRAMES				LOAD TRANSFER INFORMATION FOR USE WITH HOST STRUCTURE VERIFICATION ONLY			
			ANCHOR TYPE: 1 OR 4		ANCHORS TYPE: 2 OR 3		ANCHOR TYPE: 1 OR 4		ANCHORS TYPE: 2 OR 3		ANCHOR TYPE: 1 OR 4		ANCHORS TYPE: 2 OR 3		ANCHOR TYPE: 1 OR 4		ANCHORS TYPE: 2 OR 3					
			MAX ALLOWABLE LATERAL LOAD	MAX ALLOWABLE UPLIFT	MAX ALLOWABLE LATERAL LOAD	MAX ALLOWABLE UPLIFT	MAX ALLOWABLE LATERAL LOAD	MAX ALLOWABLE UPLIFT	MAX ALLOWABLE LATERAL LOAD	MAX ALLOWABLE UPLIFT	MAX ALLOWABLE LATERAL LOAD	MAX ALLOWABLE UPLIFT	MAX ALLOWABLE LATERAL LOAD	MAX ALLOWABLE UPLIFT	MAX ALLOWABLE LATERAL LOAD	MAX ALLOWABLE UPLIFT	MAX ALLOWABLE LATERAL LOAD	MAX ALLOWABLE UPLIFT	MAX. BASE MOMENT (M)	MAX. BASE SHEAR (V)	MAX. BASE UPLIFT (T)	MAX. BASE GRAVITY (C)
18 "	24 "	1152 in²	200.0 PSF	100.0 PSF	200.0 PSF	100.0 PSF	200.0 PSF	100.0 PSF	200.0 PSF	100.0 PSF	200.0 PSF	100.0 PSF	200.0 PSF	100.0 PSF	200.0 PSF	100.0 PSF	200.0 PSF	100.0 PSF	395.60 LB-FT	400.0 LB	910.8 LB	748.3 LB
24 "			200.0 PSF	100.0 PSF	200.0 PSF	100.0 PSF	200.0 PSF	100.0 PSF	200.0 PSF	100.0 PSF	200.0 PSF	100.0 PSF	200.0 PSF	100.0 PSF	172.2 PSF	86.1 PSF	172.2 PSF	86.1 PSF	433.90 LB-FT	344.4 LB	895.9 LB	777.9 LB
30 "			200.0 PSF	100.0 PSF	200.0 PSF	100.0 PSF	200.0 PSF	100.0 PSF	200.0 PSF	100.0 PSF	195.9 PSF	97.9 PSF	195.9 PSF	97.9 PSF	130.6 PSF	65.3 PSF	130.6 PSF	65.3 PSF	398.10 LB-FT	261.2 LB	768.6 LB	709.6 LB
18 "	30 "	1800 in²	181.5 PSF	90.7 PSF	181.5 PSF	90.7 PSF	181.5 PSF	90.7 PSF	181.5 PSF	90.7 PSF	181.5 PSF	90.7 PSF	181.5 PSF	90.7 PSF	148.4 PSF	74.2 PSF	133.6 PSF	66.8 PSF	458.80 LB-FT	463.8 LB	1137.2 LB	923.6 LB
24 "			181.5 PSF	90.7 PSF	181.5 PSF	90.7 PSF	181.5 PSF	90.7 PSF	181.5 PSF	90.7 PSF	165.3 PSF	82.6 PSF	165.3 PSF	82.6 PSF	110.2 PSF	55.1 PSF	110.2 PSF	55.1 PSF	433.90 LB-FT	344.4 LB	960.8 LB	835.3 LB
30 "			181.5 PSF	90.7 PSF	181.5 PSF	90.7 PSF	167.1 PSF	83.5 PSF	167.1 PSF	83.5 PSF	125.3 PSF	62.6 PSF	125.3 PSF	62.6 PSF	83.5 PSF	41.7 PSF	83.5 PSF	41.7 PSF	398.10 LB-FT	261.2 LB	815.9 LB	753.2 LB
18 "	36 "	2592 in²	126 (200) PSF	100.0 PSF	126 (200) PSF	100.0 PSF	126 (200) PSF	100.0 PSF	126 (182.4) PSF	91.2 PSF	126 (154.6) PSF	77.3 PSF	126 (136.9) PSF	68.4 PSF	103.0 PSF	51.5 PSF	91.4 PSF	45.7 PSF	458.80 LB-FT	463.8 LB	1222.0 LB	1000.9 LB
24 "			126 (191.3) PSF	95.6 PSF	126 (191.3) PSF	95.6 PSF	126 (153) PSF	76.5 PSF	126 (153) PSF	76.5 PSF	114.8 PSF	57.4 PSF	114.8 PSF	57.4 PSF	76.5 PSF	38.2 PSF	76.5 PSF	38.2 PSF	433.90 LB-FT	344.4 LB	1024.2 LB	892.7 LB
30 "			126 (145.1) PSF	72.5 PSF	126 (145.1) PSF	72.5 PSF	116.0 PSF	58.0 PSF	116.0 PSF	58.0 PSF	87.0 PSF	43.5 PSF	87.0 PSF	43.5 PSF	58.0 PSF	29.0 PSF	58.0 PSF	29.0 PSF	398.10 LB-FT	261.2 LB	861.7 LB	796.7LB
18 "	42 "	3528 in²	86.5 (168.4) PSF	94.6 PSF	86.5 (165.1) PSF	82.5 PSF	86.5 (151.4) PSF	75.7 PSF	86.5 (132.1) PSF	66.0 PSF	86.5 (113.6) PSF	56.8 PSF	86.5 (99.1) PSF	49.5 PSF	75.7 PSF	37.8 PSF	66.2 PSF	33.1 PSF	458.80 LB-FT	463.8 LB	1305.3 LB	1078.2 LB
24 "			86.5 (140.5) PSF	70.2 PSF	86.5 (140.5) PSF	70.2 PSF	86.5 (112.4) PSF	56.2 PSF	86.5 (112.4) PSF	56.2 PSF	84.3 PSF	42.1 PSF	84.3 PSF	42.1 PSF	56.2 PSF	28.1 PSF	56.2 PSF	28.1 PSF	433.90 LB-FT	344.4 LB	1081.6 LB	950.1 LB
30 "			86.5 (106.6) PSF	53.3 PSF	86.5 (106.6) PSF	53.3 PSF	85.2 PSF	42.6 PSF	85.2 PSF	42.6 PSF	63.9 PSF	31.9 PSF	63.9 PSF	31.9 PSF	42.6 PSF	21.3 PSF	42.6 PSF	21.3 PSF	398.10 LB-FT	261.2 LB	905.2 LB	840.2 LB

FRANK L. BENNARDO, P.E. #PE0046549
06/23/2016
VALID FOR (1) JOBS ONLY W/ ORIGINAL ENGINEER SEAL

ENGINEERING EXPRESS®
CORPORATE OFFICE:
160 SW 12th AVE, SUITE 106
DEERFIELD BEACH, FL 33442
P: (954) 354-0660 F: (954) 354-0443
E: HELLO@ENGINEERINGEXPRESS.COM
WWW.ENGINEERINGEXPRESS.COM
CERT OF AUTH #9885

PRODUCT REVISED as complying with the Florida Building Code
NOA-No. 16-0601.01
Expiration Date 01/15/2019
By
Miami-Dade Product Control

MIAMI TECH, INC
3611 NW 74TH STREET
MIAMI, FL 33147
PHONE:(305) 693-7054 FAX:(305) 693

ALUMINUM A/C STAND
HVHZ COMPLAINT

REMARKS	DRWN	CHKD	DATE
INIT ISSUE	KL	CL	01/10/07
REV. TELESCOPIC BOLTS	KL	CL	05/03/07
UPDATE PER '07 FBC	TSB	CL	09/30/08
UPDATE PER '10 FBC	TSB	TSB	05/10/12
REV PER COMMENTS	CSL	TSB	08/16/12
FBC UPDATE	CSL	CSL	07/07/15
REV PER MD COMMENTS	RWN	FLB	05/07/16

COPYRIGHT ENGINEERING EXPRESS

15-2476
SCALE: NTS
PAGE DESCRIPTION:
COVER SHEET

V:\Projects\15-2476 NOA Existing - Update 13-1017.09 for 2014 Florida Bldg Code-Project\WPMD Revision (6-23-16) - 16-0601.01\15-2476m NOA Existing - Update 13-1017.09 for 2014 Florida Bldg Code.dwg
gordond
06/23/2016 - 2:08pm

V:\Projects\15-2476 NOA Existing - Update 13-1017.09 for 2014 Florida Bldg Code-Project\WPIMD Revision (6-23-16) - 16-0601.01\15-2476m NOA Existing - Update 13-1017.09 for 2014 Florida Bldg Code.dwg 06/23/2016 - 2:08pm gordond

"HD" STAND DESIGN SCHEDULE CONTINUED

PRODUCT REVISED
as complying with the Florida Building Code
NOA-No. 16-0601.01
Expiration Date 01/15/2019
By
Miami-Dade Product Control

36" MINIMUM STAND DEPTH: MAX FACE AREA (576in² - 1764in²), FRAME QUANTITY (2-3 FRAMES)

UNIT TO FRAME RATIO — LOAD TRANSFER INFORMATION FOR USE WITH HOST STRUCTURE VERIFICATION ONLY

STAND CLEAR HEIGHT	MAX MEAN UNIT HEIGHT	MAX FACE AREA	MAX FACE AREA : 3 FRAMES — ANCHOR TYPE: 1 OR 4 — MAX ALLOWABLE LATERAL LOAD	3 FRAMES — ANCHOR TYPE: 1 OR 4 — MAX ALLOWABLE UPLIFT	3 FRAMES — ANCHOR TYPE: 2 OR 3 — MAX ALLOWABLE LATERAL LOAD	3 FRAMES — ANCHOR TYPE: 2 OR 3 — MAX ALLOWABLE UPLIFT	MAX FACE AREA : 2 FRAMES — ANCHOR TYPE: 1 OR 4 — MAX ALLOWABLE LATERAL LOAD	2 FRAMES — ANCHOR TYPE: 1 OR 4 — MAX ALLOWABLE UPLIFT	2 FRAMES — ANCHOR TYPE: 2 OR 3 — MAX ALLOWABLE LATERAL LOAD	2 FRAMES — ANCHOR TYPE: 2 OR 3 — MAX ALLOWABLE UPLIFT	MAX. BASE MOMENT (M)	MAX. BASE SHEAR (V)	MAX. BASE UPLIFT (T)	MAX. BASE GRAVITY (C)
18 "	24 "	576 in²	200.0 PSF	100.0 PSF	200.0 PSF	100.0 PSF	200.0 PSF	100.0 PSF	200.0 PSF	100.0 PSF	197.80 LB-FT	200.0 LB	455.4 LB	374.1 LB
24 "			200.0 PSF	100.0 PSF	200.0 PSF	100.0 PSF	200.0 PSF	100.0 PSF	200.0 PSF	100.0 PSF	251.90 LB-FT	200.0 LB	522.0 LB	440.8 LB
30 "			200.0 PSF	100.0 PSF	200.0 PSF	100.0 PSF	200.0 PSF	100.0 PSF	200.0 PSF	100.0 PSF	304.80 LB-FT	200.0 LB	588.7 LB	507.5 LB
18 "	30 "	900 in²	181.5 PSF	90.7 PSF	181.5 PSF	90.7 PSF	181.5 PSF	90.7 PSF	181.5 PSF	90.7 PSF	280.50 LB-FT	283.6 LB	697.8 LB	549.7 LB
24 "			181.5 PSF	90.7 PSF	181.5 PSF	90.7 PSF	181.5 PSF	90.7 PSF	181.5 PSF	90.7 PSF	357.30 LB-FT	283.6 LB	792.4 LB	644.2 LB
30 "			181.5 PSF	90.7 PSF	181.5 PSF	90.7 PSF	167.1 PSF	83.5 PSF	167.1 PSF	83.5 PSF	398.10 LB-FT	261.2 LB	815.9 LB	685.7 LB
18 "	36 "	1296 in²	126 (200) PSF	100.0 PSF	126 (200) PSF	100.0 PSF	126 (200) PSF	100.0 PSF	126 (182.4) PSF	91.2 PSF	445.10 LB-FT	450.0 LB	1188.7 LB	907.5 LB
24 "			126 (200) PSF	100.0 PSF	126 (200) PSF	100.0 PSF	126 (153) PSF	76.5 PSF	126 (153) PSF	76.5 PSF	433.90 LB-FT	344.4 LB	1022.0 LB	825.2 LB
30 "			126 (174.1) PSF	87.0 PSF	126 (174.1) PSF	87.0 PSF	116.0 PSF	58.0 PSF	116.0 PSF	58.0 PSF	398.10 LB-FT	261.2 LB	863.2 LB	729.2 LB
18 "	42 "	1764 in²	86.5 (168.4) PSF	98.7 PSF	86.5 (168.4) PSF	98.7 PSF	86.5 (151.4) PSF	75.7 PSF	86.5 (132.1) PSF	66.0 PSF	458.80 LB-FT	463.8 LB	1303.0 LB	1010.7 LB
24 "			86.5 (168.4) PSF	84.3 PSF	86.5 (168.4) PSF	84.3 PSF	86.5 (112.4) PSF	56.2 PSF	86.5 (112.4) PSF	56.2 PSF	433.90 LB-FT	344.4 LB	1083.1 LB	882.6 LB
30 "			86.5 (127.9) PSF	63.9 PSF	86.5 (127.9) PSF	63.9 PSF	85.2 PSF	42.6 PSF	85.2 PSF	42.6 PSF	398.10 LB-FT	261.2 LB	906.7 LB	772.7 LB

DESIGN SCHEDULE NOTES:

1. MAXIMUM CALCULATED FACE AREA SHALL BE EQUAL TO OR LESS THAN THE MAXIMUM ALLOWABLE FACE AREA FOR EACH CONFIGURATION.
2. REFERENCE ANCHOR SCHEDULE FOR ANCHOR TYPES LISTED HEREIN.

42" MINIMUM STAND DEPTH: MAX FACE AREA (2880in² - 8820in²), FRAME QUANTITY (5-8 FRAMES)

UNIT TO FRAME RATIO — LOAD TRANSFER INFORMATION FOR USE WITH HOST STRUCTURE VERIFICATION ONLY

STAND CLEAR HEIGHT	MAX MEAN UNIT HEIGHT	MAX FACE AREA	MAX FACE AREA : 8 FRAMES — ANCHOR TYPE: 1 OR 4 — MAX ALLOWABLE LATERAL LOAD	8 FRAMES — ANCHOR TYPE: 1 OR 4 — MAX ALLOWABLE UPLIFT	8 FRAMES — ANCHORS TYPE: 2 OR 3 — MAX ALLOWABLE LATERAL LOAD	8 FRAMES — ANCHORS TYPE: 2 OR 3 — MAX ALLOWABLE UPLIFT	MAX FACE AREA : 7 FRAMES — ANCHOR TYPE: 1 OR 4 — MAX ALLOWABLE LATERAL LOAD	7 FRAMES — ANCHOR TYPE: 1 OR 4 — MAX ALLOWABLE UPLIFT	7 FRAMES — ANCHORS TYPE: 2 OR 3 — MAX ALLOWABLE LATERAL LOAD	7 FRAMES — ANCHORS TYPE: 2 OR 3 — MAX ALLOWABLE UPLIFT	MAX FACE AREA : 6 FRAMES — ANCHOR TYPE: 1 OR 4 — MAX ALLOWABLE LATERAL LOAD	6 FRAMES — ANCHOR TYPE: 1 OR 4 — MAX ALLOWABLE UPLIFT	6 FRAMES — ANCHORS TYPE: 2 OR 3 — MAX ALLOWABLE LATERAL LOAD	6 FRAMES — ANCHORS TYPE: 2 OR 3 — MAX ALLOWABLE UPLIFT	MAX FACE AREA : 5 FRAMES — ANCHOR TYPE: 1 OR 4 — MAX ALLOWABLE LATERAL LOAD	5 FRAMES — ANCHOR TYPE: 1 OR 4 — MAX ALLOWABLE UPLIFT	5 FRAMES — ANCHORS TYPE: 2 OR 3 — MAX ALLOWABLE LATERAL LOAD	5 FRAMES — ANCHORS TYPE: 2 OR 3 — MAX ALLOWABLE UPLIFT	MAX. BASE MOMENT (M)	MAX. BASE SHEAR (V)	MAX. BASE UPLIFT (T)	MAX. BASE GRAVITY (C)
18 "	24 "	2880 in²	200.0 PSF	100.0 PSF	200.0 PSF	100.0 PSF	200.0 PSF	100.0 PSF	200.0 PSF	100.0 PSF	200.0 PSF	100.0 PSF	200.0 PSF	100.0 PSF	200.0 PSF	100.0 PSF	200.0 PSF	100.0 PSF	405.90 LB-FT	400.0 LB	806.0 LB	643.5 LB
24 "			200.0 PSF	100.0 PSF	200.0 PSF	100.0 PSF	200.0 PSF	100.0 PSF	200.0 PSF	100.0 PSF	200.0 PSF	100.0 PSF	200.0 PSF	100.0 PSF	177.7 PSF	88.8 PSF	177.7 PSF	88.8 PSF	458.80 LB-FT	355.5 LB	815.5 LB	688.6 LB
30 "			200.0 PSF	100.0 PSF	200.0 PSF	100.0 PSF	189.5 PSF	94.7 PSF	189.5 PSF	94.7 PSF	162.4 PSF	81.2 PSF	162.4 PSF	81.2 PSF	135.3 PSF	67.6 PSF	135.3 PSF	67.6 PSF	421.90 LB-FT	270.7 LB	699.5 LB	633.9 LB
18 "	30 "	4500 in²	181.5 PSF	90.7 PSF	181.5 PSF	90.7 PSF	181.5 PSF	90.7 PSF	181.5 PSF	90.7 PSF	173.6 PSF	86.8 PSF	162.3 PSF	81.1 PSF	144.6 PSF	72.3 PSF	135.4 PSF	67.7 PSF	458.80 LB-FT	452.1 LB	982.3 LB	774.4 LB
24 "			181.5 PSF	90.7 PSF	181.5 PSF	90.7 PSF	159.2 PSF	79.6 PSF	159.2 PSF	79.6 PSF	136.5 PSF	68.2 PSF	136.5 PSF	68.2 PSF	113.7 PSF	56.8 PSF	113.7 PSF	56.8 PSF	458.80 LB-FT	355.5 LB	872.7 LB	739.4 LB
30 "			138.6 PSF	69.3 PSF	138.6 PSF	69.3 PSF	121.3 PSF	60.6 PSF	121.3 PSF	60.6 PSF	103.9 PSF	51.9 PSF	103.9 PSF	51.9 PSF	86.6 PSF	43.3 PSF	86.6 PSF	43.3 PSF	421.90 LB-FT	270.7 LB	740.2 LB	672.6 LB
18 "	36 "	6480 in²	126 (160.7) PSF	80.3 PSF	126 (148.2) PSF	74.1 PSF	126 (140.6) PSF	70.3 PSF	126 (129.8) PSF	64.9 PSF	120.5 PSF	60.2 PSF	111.3 PSF	55.6 PSF	100.4 PSF	50.2 PSF	92.8 PSF	46.4 PSF	458.80 LB-FT	452.1 LB	1051.6 LB	838.9 LB
24 "			126 (126.4) PSF	63.2 PSF	126 (126.4) PSF	63.2 PSF	110.6 PSF	55.3 PSF	110.6 PSF	55.3 PSF	94.8 PSF	47.4 PSF	94.8 PSF	47.4 PSF	79.0 PSF	39.5 PSF	79.0 PSF	39.5 PSF	458.80 LB-FT	355.5 LB	925.5 LB	790.2 LB
30 "			96.2 PSF	48.1 PSF	96.2 PSF	48.1 PSF	84.2 PSF	42.1 PSF	84.2 PSF	42.1 PSF	72.2 PSF	36.1 PSF	72.2 PSF	36.1 PSF	60.1 PSF	30.0 PSF	60.1 PSF	30.0 PSF	421.90 LB-FT	270.7 LB	778.8 LB	711.3 LB
18 "	42 "	8820 in²	92.6 (118.1) PSF	59.0 PSF	92.6 (107.5) PSF	53.7 PSF	92.6 (103.3) PSF	51.6 PSF	92.6 (94.1) PSF	47.0 PSF	88.5 PSF	44.2 PSF	80.7 PSF	40.3 PSF	73.8 PSF	36.9 PSF	67.3 PSF	33.6 PSF	458.80 LB-FT	452.1 LB	1116.1 LB	903.5 LB
24 "			92.6 (92.8) PSF	46.4 PSF	92.6 (92.8) PSF	46.4 PSF	81.2 PSF	40.6 PSF	81.2 PSF	40.6 PSF	69.6 PSF	34.8 PSF	69.6 PSF	34.8 PSF	58.0 PSF	29.0 PSF	58.0 PSF	29.0 PSF	458.80 LB-FT	355.5 LB	976.3 LB	840.9 LB
30 "			70.7 PSF	35.3 PSF	70.7 PSF	35.3 PSF	61.8 PSF	30.9 PSF	61.8 PSF	30.9 PSF	53.0 PSF	26.5 PSF	53.0 PSF	26.5 PSF	44.2 PSF	22.1 PSF	44.2 PSF	22.1 PSF	421.90 LB-FT	270.7 LB	817.5 LB	750.0 LB

42" MINIMUM STAND DEPTH: MAX FACE AREA (2304in² - 7056in²), FRAME QUANTITY (4-7 FRAMES)

UNIT TO FRAME RATIO — LOAD TRANSFER INFORMATION FOR USE WITH HOST STRUCTURE VERIFICATION ONLY

STAND CLEAR HEIGHT	MAX MEAN UNIT HEIGHT	MAX FACE AREA	MAX FACE AREA : 7 FRAMES — ANCHOR TYPE: 1 OR 4 — MAX ALLOWABLE LATERAL LOAD	7 FRAMES — ANCHOR TYPE: 1 OR 4 — MAX ALLOWABLE UPLIFT	7 FRAMES — ANCHORS TYPE: 2 OR 3 — MAX ALLOWABLE LATERAL LOAD	7 FRAMES — ANCHORS TYPE: 2 OR 3 — MAX ALLOWABLE UPLIFT	MAX FACE AREA : 6 FRAMES — ANCHOR TYPE: 1 OR 4 — MAX ALLOWABLE LATERAL LOAD	6 FRAMES — ANCHOR TYPE: 1 OR 4 — MAX ALLOWABLE UPLIFT	6 FRAMES — ANCHORS TYPE: 2 OR 3 — MAX ALLOWABLE LATERAL LOAD	6 FRAMES — ANCHORS TYPE: 2 OR 3 — MAX ALLOWABLE UPLIFT	MAX FACE AREA : 5 FRAMES — ANCHOR TYPE: 1 OR 4 — MAX ALLOWABLE LATERAL LOAD	5 FRAMES — ANCHOR TYPE: 1 OR 4 — MAX ALLOWABLE UPLIFT	5 FRAMES — ANCHORS TYPE: 2 OR 3 — MAX ALLOWABLE LATERAL LOAD	5 FRAMES — ANCHORS TYPE: 2 OR 3 — MAX ALLOWABLE UPLIFT	MAX FACE AREA : 4 FRAMES — ANCHOR TYPE: 1 OR 4 — MAX ALLOWABLE LATERAL LOAD	4 FRAMES — ANCHOR TYPE: 1 OR 4 — MAX ALLOWABLE UPLIFT	4 FRAMES — ANCHORS TYPE: 2 OR 3 — MAX ALLOWABLE LATERAL LOAD	4 FRAMES — ANCHORS TYPE: 2 OR 3 — MAX ALLOWABLE UPLIFT	MAX. BASE MOMENT (M)	MAX. BASE SHEAR (V)	MAX. BASE UPLIFT (T)	MAX. BASE GRAVITY (C)
18 "	24 "	2304 in²	200.0 PSF	100.0 PSF	200.0 PSF	100.0 PSF	200.0 PSF	100.0 PSF	200.0 PSF	100.0 PSF	200.0 PSF	100.0 PSF	200.0 PSF	100.0 PSF	200.0 PSF	100.0 PSF	200.0 PSF	100.0 PSF	405.90 LB-FT	400.0 LB	806.0 LB	643.5 LB
24 "			200.0 PSF	100.0 PSF	200.0 PSF	100.0 PSF	200.0 PSF	100.0 PSF	200.0 PSF	100.0 PSF	200.0 PSF	100.0 PSF	200.0 PSF	100.0 PSF	177.7 PSF	88.8 PSF	177.7 PSF	88.8 PSF	458.80 LB-FT	355.5 LB	815.5 LB	688.6 LB
30 "			200.0 PSF	100.0 PSF	200.0 PSF	100.0 PSF	200.0 PSF	100.0 PSF	200.0 PSF	100.0 PSF	169.2 PSF	84.6 PSF	169.2 PSF	84.6 PSF	135.3 PSF	67.6 PSF	135.3 PSF	67.6 PSF	421.90 LB-FT	270.7 LB	697.5 LB	633.9 LB
18 "	30 "	3600 in²	181.5 PSF	90.7 PSF	181.5 PSF	90.7 PSF	181.5 PSF	90.7 PSF	181.5 PSF	90.7 PSF	180.8 PSF	90.4 PSF	169.0 PSF	84.5 PSF	144.6 PSF	72.3 PSF	135.4 PSF	67.7 PSF	458.80 LB-FT	452.1 LB	983.0 LB	774.4 LB
24 "			181.5 PSF	90.7 PSF	181.5 PSF	90.7 PSF	170.6 PSF	85.3 PSF	170.6 PSF	85.3 PSF	142.2 PSF	71.1 PSF	142.2 PSF	71.1 PSF	113.7 PSF	56.8 PSF	113.7 PSF	56.8 PSF	458.80 LB-FT	355.5 LB	873.8 LB	739.4 LB
30 "			151.6 PSF	75.8 PSF	151.6 PSF	75.8 PSF	129.9 PSF	64.9 PSF	129.9 PSF	64.9 PSF	108.3 PSF	54.1 PSF	108.3 PSF	54.1 PSF	86.6 PSF	43.3 PSF	86.6 PSF	43.3 PSF	421.90 LB-FT	270.7 LB	741.4 LB	672.6 LB
18 "	36 "	5184 in²	126 (175.8) PSF	87.9 PSF	126 (162.1) PSF	81.0 PSF	126 (150.7) PSF	75.3 PSF	126 (139) PSF	69.5 PSF	125.5 PSF	62.7 PSF	115.9 PSF	57.9 PSF	100.4 PSF	50.2 PSF	92.8 PSF	46.4 PSF	458.80 LB-FT	452.1 LB	1052.8 LB	838.9 LB
24 "			126 (138.2) PSF	69.1 PSF	126 (138.2) PSF	69.1 PSF	118.5 PSF	59.2 PSF	118.5 PSF	59.2 PSF	98.7 PSF	49.3 PSF	98.7 PSF	49.3 PSF	79.0 PSF	39.5 PSF	79.0 PSF	39.5 PSF	458.80 LB-FT	355.5 LB	926.7 LB	790.2 LB
30 "			105.2 PSF	52.6 PSF	105.2 PSF	52.6 PSF	90.2 PSF	45.1 PSF	90.2 PSF	45.1 PSF	75.2 PSF	37.6 PSF	75.2 PSF	37.6 PSF	60.1 PSF	30.0 PSF	60.1 PSF	30.0 PSF	421.90 LB-FT	270.7 LB	780.1 LB	711.3 LB
18 "	42 "	7056 in²	92.6 (129.1) PSF	64.5 PSF	92.6 (117.6) PSF	58.8 PSF	92.6 (110.7) PSF	55.3 PSF	92.6 (100.8) PSF	50.4 PSF	92.2 PSF	46.1 PSF	84.1 PSF	42.0 PSF	73.8 PSF	36.9 PSF	67.3 PSF	33.6 PSF	458.80 LB-FT	452.1 LB	1117.4 LB	903.5 LB
24 "			92.6 (101.5) PSF	50.7 PSF	92.6 (101.5) PSF	50.7 PSF	87.0 PSF	43.5 PSF	87.0 PSF	43.5 PSF	72.5 PSF	36.2 PSF	72.5 PSF	36.2 PSF	58.0 PSF	29.0 PSF	58.0 PSF	29.0 PSF	458.80 LB-FT	355.5 LB	977.5 LB	840.9 LB
30 "			77.3 PSF	38.6 PSF	77.3 PSF	38.6 PSF	66.3 PSF	33.1 PSF	66.3 PSF	33.1 PSF	55.2 PSF	27.6 PSF	55.2 PSF	27.6 PSF	44.2 PSF	22.1 PSF	44.2 PSF	22.1 PSF	421.90 LB-FT	270.7 LB	818.7 LB	750.0 LB

42" MINIMUM STAND DEPTH: MAX FACE AREA (1728in² - 5292in²), FRAME QUANTITY (3-6 FRAMES)

UNIT TO FRAME RATIO — LOAD TRANSFER INFORMATION FOR USE WITH HOST STRUCTURE VERIFICATION ONLY

STAND CLEAR HEIGHT	MAX MEAN UNIT HEIGHT	MAX FACE AREA	MAX FACE AREA : 6 FRAMES — ANCHOR TYPE: 1 OR 4 — MAX ALLOWABLE LATERAL LOAD	6 FRAMES — ANCHOR TYPE: 1 OR 4 — MAX ALLOWABLE UPLIFT	6 FRAMES — ANCHORS TYPE: 2 OR 3 — MAX ALLOWABLE LATERAL LOAD	6 FRAMES — ANCHORS TYPE: 2 OR 3 — MAX ALLOWABLE UPLIFT	MAX FACE AREA : 5 FRAMES — ANCHOR TYPE: 1 OR 4 — MAX ALLOWABLE LATERAL LOAD	5 FRAMES — ANCHOR TYPE: 1 OR 4 — MAX ALLOWABLE UPLIFT	5 FRAMES — ANCHORS TYPE: 2 OR 3 — MAX ALLOWABLE LATERAL LOAD	5 FRAMES — ANCHORS TYPE: 2 OR 3 — MAX ALLOWABLE UPLIFT	MAX FACE AREA : 4 FRAMES — ANCHOR TYPE: 1 OR 4 — MAX ALLOWABLE LATERAL LOAD	4 FRAMES — ANCHOR TYPE: 1 OR 4 — MAX ALLOWABLE UPLIFT	4 FRAMES — ANCHORS TYPE: 2 OR 3 — MAX ALLOWABLE LATERAL LOAD	4 FRAMES — ANCHORS TYPE: 2 OR 3 — MAX ALLOWABLE UPLIFT	MAX FACE AREA : 3 FRAMES — ANCHOR TYPE: 1 OR 4 — MAX ALLOWABLE LATERAL LOAD	3 FRAMES — ANCHOR TYPE: 1 OR 4 — MAX ALLOWABLE UPLIFT	3 FRAMES — ANCHORS TYPE: 2 OR 3 — MAX ALLOWABLE LATERAL LOAD	3 FRAMES — ANCHORS TYPE: 2 OR 3 — MAX ALLOWABLE UPLIFT	MAX. BASE MOMENT (M)	MAX. BASE SHEAR (V)	MAX. BASE UPLIFT (T)	MAX. BASE GRAVITY (C)
18 "	24 "	1728 in²	200.0 PSF	100.0 PSF	200.0 PSF	100.0 PSF	200.0 PSF	100.0 PSF	200.0 PSF	100.0 PSF	200.0 PSF	100.0 PSF	200.0 PSF	100.0 PSF	200.0 PSF	100.0 PSF	200.0 PSF	100.0 PSF	405.90 LB-FT	400.0 LB	806.0 LB	643.5 LB
24 "			200.0 PSF	100.0 PSF	200.0 PSF	100.0 PSF	200.0 PSF	100.0 PSF	200.0 PSF	100.0 PSF	200.0 PSF	100.0 PSF	200.0 PSF	100.0 PSF	177.7 PSF	88.8 PSF	177.7 PSF	88.8 PSF	458.80 LB-FT	355.5 LB	815.5 LB	688.6 LB
30 "			200.0 PSF	100.0 PSF	200.0 PSF	100.0 PSF	200.0 PSF	100.0 PSF	200.0 PSF	100.0 PSF	180.5 PSF	90.2 PSF	180.5 PSF	90.2 PSF	135.3 PSF	67.6 PSF	135.3 PSF	67.6 PSF	421.90 LB-FT	270.7 LB	698.7 LB	633.9 LB
18 "	30 "	2700 in²	181.5 PSF	90.7 PSF	181.5 PSF	90.7 PSF	181.5 PSF	90.7 PSF	181.5 PSF	90.7 PSF	181.5 PSF	90.7 PSF	180.3 PSF	90.1 PSF	144.6 PSF	72.3 PSF	135.4 PSF	67.7 PSF	458.80 LB-FT	452.1 LB	978.5 LB	774.4 LB
24 "			181.5 PSF	90.7 PSF	181.5 PSF	90.7 PSF	181.5 PSF	90.7 PSF	181.5 PSF	90.7 PSF	151.6 PSF	75.8 PSF	151.6 PSF	75.8 PSF	113.7 PSF	56.8 PSF	113.7 PSF	56.8 PSF	458.80 LB-FT	355.5 LB	871.9 LB	739.4 LB
30 "			173.2 PSF	86.6 PSF	173.2 PSF	86.6 PSF	144.4 PSF	72.2 PSF	144.4 PSF	72.2 PSF	115.5 PSF	57.7 PSF	115.5 PSF	57.7 PSF	86.6 PSF	43.3 PSF	86.6 PSF	43.3 PSF	421.90 LB-FT	270.7 LB	743.0 LB	672.6 LB
18 "	36 "	3888 in²	126 (200) PSF	100.0 PSF	126 (185.2) PSF	92.6 PSF	126 (167.4) PSF	83.7 PSF	126 (154.4) PSF	77.2 PSF	126 (133.9) PSF	66.9 PSF	123.6 PSF	61.8 PSF	100.4 PSF	50.2 PSF	92.8 PSF	46.4 PSF	458.80 LB-FT	452.1 LB	1052.1 LB	838.9 LB
24 "			126 (158) PSF	79.0 PSF	126 (158) PSF	79.0 PSF	126 (131.6) PSF	65.8 PSF	126 (131.6) PSF	65.8 PSF	105.3 PSF	52.6 PSF	105.3 PSF	52.6 PSF	79.0 PSF	39.5 PSF	79.0 PSF	39.5 PSF	458.80 LB-FT	355.5 LB	928.3 LB	790.2 LB
30 "			120.3 PSF	60.1 PSF	120.3 PSF	60.1 PSF	100.2 PSF	50.1 PSF	100.2 PSF	50.1 PSF	80.2 PSF	40.1 PSF	80.2 PSF	40.1 PSF	60.1 PSF	30.0 PSF	60.1 PSF	30.0 PSF	421.90 LB-FT	270.7 LB	781.7 LB	711.3 LB
18 "	42 "	5292 in²	92.6 (147.6) PSF	73.8 PSF	92.6 (134.4) PSF	67.2 PSF	92.6 (123) PSF	61.5 PSF	92.6 (112) PSF	56.0 PSF	92.6 (98.4) PSF	49.2 PSF	89.7 PSF	44.8 PSF	73.8 PSF	36.9 PSF	67.3 PSF	33.6 PSF	458.80 LB-FT	452.1 LB	1119.0 LB	903.5 LB
24 "			92.6 (116) PSF	58.0 PSF	92.6 (116) PSF	58.0 PSF	92.6 (96.7) PSF	48.3 PSF	92.6 (96.7) PSF	48.3 PSF	77.3 PSF	38.6 PSF	77.3 PSF	38.6 PSF	58.0 PSF	29.0 PSF	58.0 PSF	29.0 PSF	458.80 LB-FT	355.5 LB	979.1 LB	840.9 LB
30 "			88.4 PSF	44.2 PSF	88.4 PSF	44.2 PSF	73.6 PSF	36.8 PSF	73.6 PSF	36.8 PSF	58.9 PSF	29.4 PSF	58.9 PSF	29.4 PSF	44.2 PSF	22.1 PSF	44.2 PSF	22.1 PSF	421.90 LB-FT	270.7 LB	820.3 LB	750.0 LB

FRANK L. BENNARDO, P.E.
PE0046549
No. 46549
06/23/2016
STATE OF FLORIDA PROFESSIONAL ENGINEER
VALID FOR (1) JOB ONLY
ONLY W/ ORIGINAL ENGINEER SEAL

ENGINEERING EXPRESS
CORPORATE OFFICE:
160 SW 12th AVE, SUITE 106
DEERFIELD BEACH, FL 33442
P: (954) 354-0660 F: (954) 354-0443
E: HELLO@ENGINEERINGEXPRESS.COM
ENGINEERINGEXPRESS.COM
CERT OF AUTH #9885

MIAMI TECH, INC
3611 NW 74TH STREET
MIAMI, FL 33147
PHONE:(305) 693-7054 FAX:(305) 693-6125

ALUMINUM A/C STAND
HVHZ COMPLAINT

REMARKS	DRWN	CHKD	DATE
INIT ISSUE	KL	CL	01/10/07
REV. TELESCOPIC BOLTS	KL	CL	05/03/07
UPDATE PER '07 FBC	TSB	CL	09/30/08
UPDATE PER '10 FBC	CSL	TSB	05/10/12
REV. PER COMMENTS	CSL	TSB	08/16/12
FBC UPDATE	RWN	CSL	07/07/15
REV PER MD COMMENTS	RWN	FLB	05/07/16

THIS DOCUMENT IS THE PROPERTY OF ENGINEERING EXPRESS AND SHALL NOT BE REPRODUCED IN WHOLE OR PART WITHOUT WRITTEN CONSENT OF THE CERTIFYING ENGINEER. ALTERATIONS, ADDITIONS, HIGHLIGHTING, OR OTHER MARKINGS TO THIS DOCUMENT ARE NOT PERMITTED AND INVALIDATE OUR CERTIFICATION.
COPYRIGHT ENGINEERING EXPRESS

15-2476

SCALE: NTS -

PAGE DESCRIPTION:
COVER SHEET
-

"HD" STAND DESIGN SCHEDULE CONTINUED

42" MINIMUM STAND DEPTH: MAX FACE AREA (1152in² - 3528in²), FRAME QUANTITY (2-5 FRAMES)

STAND CLEAR HEIGHT	MAX MEAN UNIT HEIGHT	MAX FACE AREA	UNIT TO FRAME RATIO: MAX FACE AREA : 5 FRAMES — ANCHOR TYPE: 1 OR 4 — MAX ALLOWABLE LATERAL LOAD	MAX ALLOWABLE UPLIFT	ANCHORS TYPE: 2 OR 3 — MAX ALLOWABLE LATERAL LOAD	MAX ALLOWABLE UPLIFT	MAX FACE AREA : 4 FRAMES — ANCHOR TYPE: 1 OR 4 — MAX ALLOWABLE LATERAL LOAD	MAX ALLOWABLE UPLIFT	ANCHORS TYPE: 2 OR 3 — MAX ALLOWABLE LATERAL LOAD	MAX ALLOWABLE UPLIFT	MAX FACE AREA : 3 FRAMES — ANCHOR TYPE: 1 OR 4 — MAX ALLOWABLE LATERAL LOAD	MAX ALLOWABLE UPLIFT	ANCHORS TYPE: 2 OR 3 — MAX ALLOWABLE LATERAL LOAD	MAX ALLOWABLE UPLIFT	MAX FACE AREA : 2 FRAMES — ANCHOR TYPE: 1 OR 4 — MAX ALLOWABLE LATERAL LOAD	MAX ALLOWABLE UPLIFT	ANCHORS TYPE: 2 OR 3 — MAX ALLOWABLE LATERAL LOAD	MAX ALLOWABLE UPLIFT	LOAD TRANSFER INFORMATION FOR USE WITH HOST STRUCTURE VERIFICATION ONLY — MAX. BASE MOMENT (M)	MAX. BASE SHEAR (V)	MAX. BASE UPLIFT (T)	MAX. BASE GRAVITY (C)
18 "	24 "	1152 in²	200.0 PSF	100.0 PSF	200.0 PSF	100.0 PSF	200.0 PSF	100.0 PSF	200.0 PSF	100.0 PSF	200.0 PSF	100.0 PSF	200.0 PSF	100.0 PSF	200.0 PSF	100.0 PSF	200.0 PSF	100.0 PSF	405.90 LB-FT	400.0 LB	806.0 LB	643.5 LB
24 "			200.0 PSF	100.0 PSF	200.0 PSF	100.0 PSF	200.0 PSF	100.0 PSF	200.0 PSF	100.0 PSF	200.0 PSF	100.0 PSF	200.0 PSF	100.0 PSF	177.7 PSF	88.8 PSF	177.7 PSF	88.8 PSF	458.80 LB-FT	355.5 LB	815.5 LB	688.6 LB
30 "			200.0 PSF	100.0 PSF	200.0 PSF	100.0 PSF	200.0 PSF	100.0 PSF	200.0 PSF	100.0 PSF	200.0 PSF	100.0 PSF	200.0 PSF	100.0 PSF	135.3 PSF	67.6 PSF	135.3 PSF	67.6 PSF	421.90 LB-FT	270.7 LB	693.0 LB	633.9 LB
18 "	30 "	1800 in²	181.5 PSF	90.7 PSF	181.5 PSF	90.7 PSF	181.5 PSF	90.7 PSF	181.5 PSF	90.7 PSF	181.5 PSF	90.7 PSF	181.5 PSF	90.7 PSF	144.6 PSF	72.3 PSF	135.4 PSF	67.7 PSF	458.80 LB-FT	452.1 LB	978.5 LB	774.4 LB
24 "			181.5 PSF	90.7 PSF	181.5 PSF	90.7 PSF	181.5 PSF	90.7 PSF	181.5 PSF	90.7 PSF	170.6 PSF	85.3 PSF	170.6 PSF	85.3 PSF	113.7 PSF	56.8 PSF	113.7 PSF	56.8 PSF	458.80 LB-FT	355.5 LB	873.8 LB	739.4 LB
30 "			181.5 PSF	90.7 PSF	181.5 PSF	90.7 PSF	173.2 PSF	86.6 PSF	173.2 PSF	86.6 PSF	129.9 PSF	64.9 PSF	129.9 PSF	64.9 PSF	86.6 PSF	43.3 PSF	86.6 PSF	43.3 PSF	421.90 LB-FT	270.7 LB	743.0 LB	672.6 LB
18 "	36 "	2592 in²	126 (200) PSF	100.0 PSF	126 (200) PSF	100.0 PSF	126 (200) PSF	100.0 PSF	126 (185.2) PSF	92.6 PSF	126 (150.7) PSF	75.3 PSF	126 (139) PSF	69.5 PSF	100.4 PSF	50.2 PSF	92.8 PSF	46.4 PSF	458.80 LB-FT	452.1 LB	1050.6 LB	838.9 LB
24 "			126 (197.5) PSF	98.7 PSF	126 (197.5) PSF	98.7 PSF	126 (158) PSF	79.0 PSF	126 (158) PSF	79.0 PSF	118.5 PSF	59.2 PSF	118.5 PSF	59.2 PSF	79.0 PSF	39.5 PSF	79.0 PSF	39.5 PSF	458.80 LB-FT	355.5 LB	930.6 LB	790.2 LB
30 "			126 (150.4) PSF	75.2 PSF	126 (150.4) PSF	75.2 PSF	120.3 PSF	60.1 PSF	120.3 PSF	60.1 PSF	90.2 PSF	45.1 PSF	90.2 PSF	45.1 PSF	60.1 PSF	30.0 PSF	60.1 PSF	30.0 PSF	421.90 LB-FT	270.7 LB	783.9 LB	711.3 LB
18 "	42 "	3528 in²	92.6 (174.5) PSF	92.2 PSF	92.6 (167.9) PSF	83.9 PSF	92.6 (147.6) PSF	73.8 PSF	92.6 (134.4) PSF	67.2 PSF	92.6 (110.7) PSF	55.3 PSF	92.6 (100.8) PSF	50.4 PSF	73.8 PSF	36.9 PSF	67.3 PSF	33.6 PSF	458.80 LB-FT	452.1 LB	1121.2 LB	903.5 LB
24 "			92.6 (145.1) PSF	72.5 PSF	92.6 (145.1) PSF	72.5 PSF	92.6 (116) PSF	58.0 PSF	92.6 (116) PSF	58.0 PSF	87.0 PSF	43.5 PSF	87.0 PSF	43.5 PSF	58.0 PSF	29.0 PSF	58.0 PSF	29.0 PSF	458.80 LB-FT	355.5 LB	981.4 LB	840.9 LB
30 "			92.6 (110.5) PSF	55.2 PSF	92.6 (110.5) PSF	55.2 PSF	88.4 PSF	44.2 PSF	88.4 PSF	44.2 PSF	66.3 PSF	33.1 PSF	66.3 PSF	33.1 PSF	44.2 PSF	22.1 PSF	44.2 PSF	22.1 PSF	421.90 LB-FT	270.7 LB	822.6 LB	750.0 LB

42" MINIMUM STAND DEPTH: MAX FACE AREA (576in² - 1764in²), FRAME QUANTITY (2-3 FRAMES)

STAND CLEAR HEIGHT	MAX MEAN UNIT HEIGHT	MAX FACE AREA	UNIT TO FRAME RATIO: MAX FACE AREA : 3 FRAMES — ANCHOR TYPE: 1 OR 4 — MAX ALLOWABLE LATERAL LOAD	MAX ALLOWABLE UPLIFT	ANCHOR TYPE: 2 OR 3 — MAX ALLOWABLE LATERAL LOAD	MAX ALLOWABLE UPLIFT	MAX FACE AREA : 2 FRAMES — ANCHOR TYPE: 1 OR 4 — MAX ALLOWABLE LATERAL LOAD	MAX ALLOWABLE UPLIFT	ANCHOR TYPE: 2 OR 3 — MAX ALLOWABLE LATERAL LOAD	MAX ALLOWABLE UPLIFT	LOAD TRANSFER INFORMATION FOR USE WITH HOST STRUCTURE VERIFICATION ONLY — MAX. BASE MOMENT (M)	MAX. BASE SHEAR (V)	MAX. BASE UPLIFT (T)	MAX. BASE GRAVITY (C)
18 "	24 "	576 in²	200.0 PSF	100.0 PSF	200.0 PSF	100.0 PSF	200.0 PSF	100.0 PSF	200.0 PSF	100.0 PSF	202.90 LB-FT	200.0 LB	403.0 LB	321.7 LB
24 "			200.0 PSF	100.0 PSF	200.0 PSF	100.0 PSF	200.0 PSF	100.0 PSF	200.0 PSF	100.0 PSF	258.10 LB-FT	200.0 LB	460.1 LB	378.9 LB
30 "			200.0 PSF	100.0 PSF	200.0 PSF	100.0 PSF	200.0 PSF	100.0 PSF	200.0 PSF	100.0 PSF	311.70 LB-FT	200.0 LB	517.3 LB	436.0 LB
18 "	30 "	900 in²	181.5 PSF	90.7 PSF	181.5 PSF	90.7 PSF	181.5 PSF	90.7 PSF	181.5 PSF	90.7 PSF	287.80 LB-FT	283.6 LB	616.8 LB	468.6 LB
24 "			181.5 PSF	90.7 PSF	181.5 PSF	90.7 PSF	181.5 PSF	90.7 PSF	181.5 PSF	90.7 PSF	366.00 LB-FT	283.6 LB	697.8 LB	549.7 LB
30 "			181.5 PSF	90.7 PSF	181.5 PSF	90.7 PSF	173.2 PSF	86.6 PSF	173.2 PSF	86.6 PSF	421.90 LB-FT	270.7 LB	743.0 LB	605.1 LB
18 "	36 "	1296 in²	126 (200) PSF	100.0 PSF	126 (200) PSF	100.0 PSF	126 (200) PSF	100.0 PSF	126 (185.2) PSF	92.6 PSF	456.70 LB-FT	450.0 LB	1049.4 LB	768.2 LB
24 "			126 (200) PSF	100.0 PSF	126 (200) PSF	100.0 PSF	126 (158) PSF	79.0 PSF	126 (158) PSF	79.0 PSF	458.80 LB-FT	355.5 LB	928.3 LB	722.7 LB
30 "			126 (180.5) PSF	90.2 PSF	126 (180.5) PSF	90.2 PSF	120.3 PSF	60.1 PSF	120.3 PSF	60.1 PSF	421.90 LB-FT	270.7 LB	785.4 LB	643.8 LB
18 "	42 "	1764 in²	92.6 (174.5) PSF	100.0 PSF	92.6 (174.5) PSF	100.0 PSF	92.6 (147.6) PSF	73.8 PSF	92.6 (134.4) PSF	67.2 PSF	458.80 LB-FT	452.1 LB	1119.0 LB	836.0 LB
24 "			92.6 (174.1) PSF	87.0 PSF	92.6 (174.1) PSF	87.0 PSF	92.6 (116) PSF	58.0 PSF	92.6 (116) PSF	58.0 PSF	458.80 LB-FT	355.5 LB	982.9 LB	773.4 LB
30 "			92.6 (132.6) PSF	66.3 PSF	92.6 (132.6) PSF	66.3 PSF	88.4 PSF	44.2 PSF	88.4 PSF	44.2 PSF	421.90 LB-FT	270.7 LB	824.1 LB	682.5 LB

PRODUCT REVISED
as complying with the Florida Building Code
NOA-No. 16-0601.01
Expiration Date 01/15/2019
By
Miami-Dade Product Control

DESIGN SCHEDULE NOTES:

1. MAXIMUM CALCULATED FACE AREA SHALL BE EQUAL TO OR LESS THAN THE MAXIMUM ALLOWABLE FACE AREA FOR EACH CONFIGURATION.
2. REFERENCE ANCHOR SCHEDULE FOR ANCHOR TYPES LISTED HEREIN.

"CUSTOM ASSEMBLY" DESIGN SCHEDULE

CUSTOM ASSEMBLY ALLOWABLE CONFIGURATIONS:

1 UNITS:2 FRAME CONFIGURATION

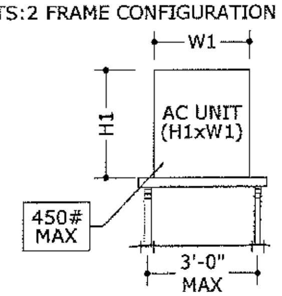

2 UNITS:3 FRAME CONFIGURATION

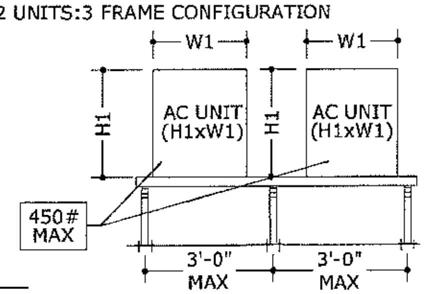

NOTE: FOR THE "CUSTOM ASSEMBLY" STANDS, THE NUMBER OF UNITS PER STAND IS RESTRICTED TO THE CONFIGURATIONS ILLUSTRATED ABOVE. SEE DESIGN SCHEDULE FOR MORE INFORMATION.

UNIT WIDTH	UNIT DEPTH	UNIT HEIGHT	STAND CLEAR HEIGHT	(1) UNITS TO (2) FRAMES — ANCHOR TYPE: 1 OR 4 — MAX ALLOWABLE LATERAL LOAD	MAX ALLOWABLE UPLIFT	ANCHOR TYPE: 2 OR 3 — MAX ALLOWABLE LATERAL LOAD	MAX ALLOWABLE UPLIFT	(2) UNITS TO (3) FRAMES — ANCHOR TYPE: 1 OR 4 — MAX ALLOWABLE LATERAL LOAD	MAX ALLOWABLE UPLIFT	ANCHOR TYPE: 2 OR 3 — MAX ALLOWABLE LATERAL LOAD	MAX ALLOWABLE UPLIFT
36 "	36 "	54 "	18 "	82.3 PSF	41.2 PSF	82.3 PSF	41.2 PSF	82.3 PSF	41.2 PSF	82.3 PSF	41.2 PSF
			24 "	82.3 PSF	41.2 PSF	82.3 PSF	41.2 PSF	62.5 PSF	31.3 PSF	62.5 PSF	31.3 PSF
			30 "	71.0 PSF	35.5 PSF	71.0 PSF	35.5 PSF	54.5 PSF	27.3 PSF	54.5 PSF	27.3 PSF
40 "	40 "	54 "	18 "	75.5 PSF	37.8 PSF	75.5 PSF	37.8 PSF	73.0 PSF	36.5 PSF	73.0 PSF	36.5 PSF
			24 "	75.5 PSF	37.8 PSF	75.5 PSF	37.8 PSF	57.5 PSF	28.8 PSF	57.5 PSF	28.8 PSF
			30 "	63.1 PSF	31.6 PSF	63.1 PSF	31.6 PSF	47.6 PSF	23.8 PSF	47.6 PSF	23.8 PSF

DESIGN SCHEDULE NOTES:

1. MAXIMUM UNIT DIMENSIONS SHALL CONFORM TO THE DIMENSIONS ILLUSTRATED ABOVE FOR EACH CONFIGURATION.
2. REFERENCE ANCHOR SCHEDULE FOR ANCHOR TYPES LISTED HEREIN.

FRANK L. BENNARDO, P.E. # PE0046549
06/23/2016
ENGINEERING EXPRESS®
CORPORATE OFFICE: 160 SW 12th AVE, SUITE 106, DEERFIELD BEACH, FL 33442
P: (954) 354-0660 F: (954) 354-0443
E: HELLO@ENGINEERINGEXPRESS.COM ENGINEERINGEXPRESS.COM
CERT OF AUTH #9885
MIAMI TECH, INC
3611 NW 74TH STREET
MIAMI, FL 33147
PHONE:(305) 693-7054 FAX:(305) 693-6125

ALUMINUM A/C STAND HVHZ COMPLAINT

COPYRIGHT ENGINEERING EXPRESS

15-2476
SCALE: NTS
PAGE DESCRIPTION: COVER SHEET

FRAME ASSEMBLY & UNIT TIE-DOWN DETAILS:

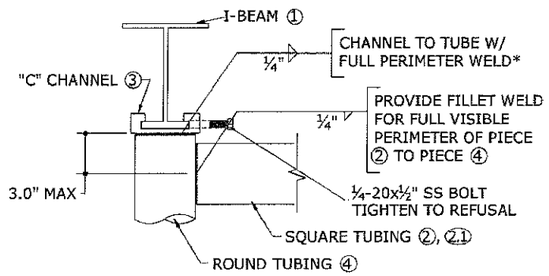

1/9 FRAME ASSEMBLY DETAIL

3" = 1'-0" DETAIL

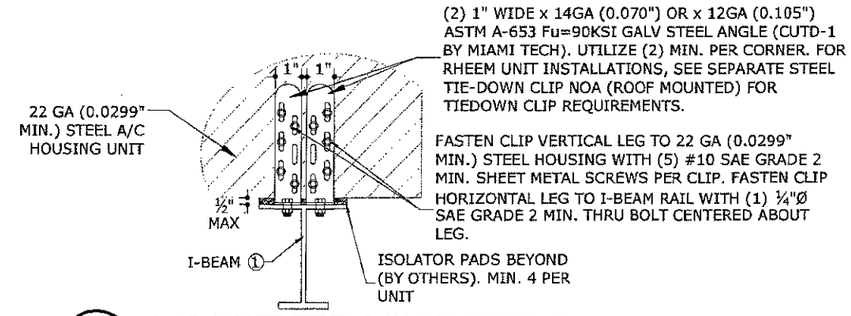

2/9 A/C UNIT TIE-DOWN DETAIL

SCALE: 3"=1'-0"

*C-CHANNEL TO POST WELD NOTE:
IN AREAS WHERE ¼" WELD DIAMETER CANNOT BE ACHIEVED, CONTINUE WELD AROUND FULL PERIMETER OF POST TO PREVENT WATER INFILTRATION. WELD DIAMETER WILL DECREASE TO 0.05" ALONG C-CHANNEL EDGE. SEE DETAIL BELOW.

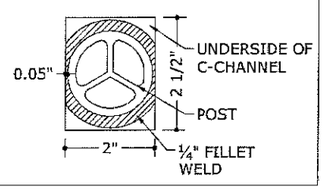

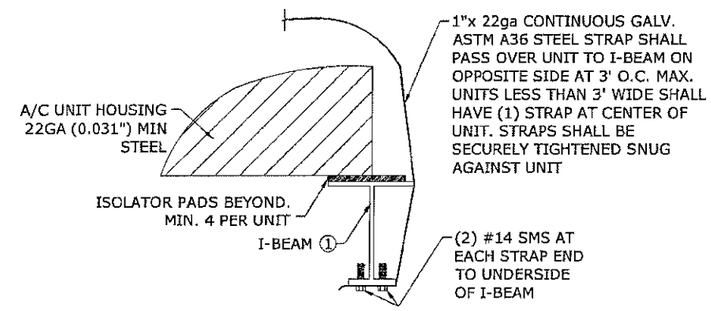

5/9 ALT. A/C UNIT TIE-DOWN DETAIL

SCALE: 3"=1'-0"

NOTE: UNIT TIEDOWN DETAILS MAY ALSO BE USED TO ANCHOR THE UNIT TO THE SUPPORT ANGLE SHOWN ON SHEET 10. (I.E. I-BEAM CAN BE SUBSTITUTED WITH ANGLE SUPPORT AS BASE MATERIAL)

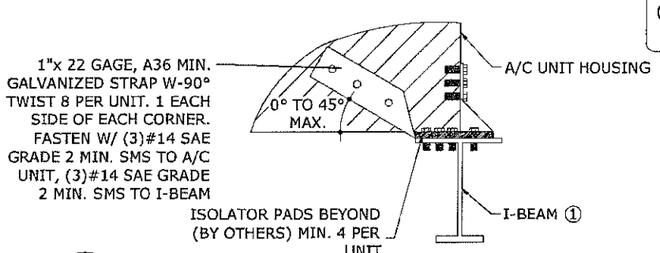

3/9 ALT. A/C UNIT TIE-DOWN DETAIL

SCALE: 3"=1'-0"

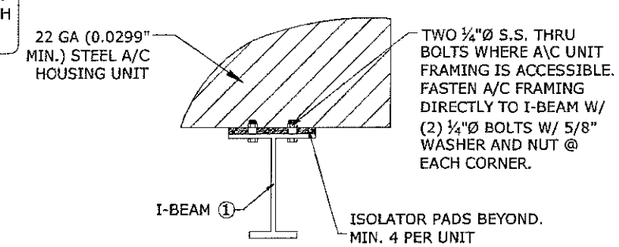

4/9 ALT. A/C UNIT TIE-DOWN DETAIL

SCALE: 3"=1'-0"

PRODUCT REVISED
as complying with the Florida Building Code
NOA-No. 16-0601.01
Expiration Date 01/15/2019
By
Miami-Dade Product Control

FRANK L. BENNARDO, P.E. #PE0046549
FRANK L. BENNARDO LICENSE No. 46549 STATE OF FLORIDA PROFESSIONAL ENGINEER
06/23/2016
VALID FOR (1) JOB(s) ONLY ONLY W/ ORIGINAL ENGINEER SEAL

ENGINEERING EXPRESS®
CORPORATE OFFICE:
160 SW 12th AVE, SUITE 106
DEERFIELD BEACH, FL 33442
P: (954) 354-0660 F: (954) 354-0443
E: HELLO@ENGINEERINGEXPRESS.COM
ENGINEERINGEXPRESS.COM
CERT OF AUTH #9885

MIAMI TECH, INC
3611 NW 74TH STREET
MIAMI, FL 33147
PHONE:(305) 693-7054 FAX:(305) 693-6125

ALUMINUM A/C STAND
HVHZ COMPLAINT

REMARKS	DRWN	CHKD	DATE
INIT ISSUE	KL	CL	01/10/07
REV. TELESCOPIC BOLTS	KL	CL	05/03/07
UPDATE PER '07 FBC	TSB	CL	09/30/08
UPDATE PER '10 FBC	CSL	TSB	05/10/12
REV. PER COMMENTS	CSL	TSB	08/16/12
FBC UPDATE	RWN	CSL	07/07/15
REV PER M/D COMMENTS	RWN	FLB	05/07/16

THIS DOCUMENT IS THE PROPERTY OF ENGINEERING EXPRESS AND SHALL NOT BE REPRODUCED IN WHOLE OR IN PART WITHOUT WRITTEN CONSENT OF THE CERTIFYING ENGINEER. ITEMS INDICATED ON THIS DOCUMENT ARE TO BE USED ONLY WITH THE SPECIFIED PROJECT. ANY OTHER USE OR REUSE IS PROHIBITED AND INVALIDATES OUR CERTIFICATION.
COPYRIGHT ENGINEERING EXPRESS

15-2476

SCALE: NTS

PAGE DESCRIPTION:
COVER SHEET

9 OF 10

V:\Projects\15-2476 NOA Existing - Update 13-1017.09 for 2014 Florida Bldg Code-Project\WPMD Revision (8-23-16) - 16-0601.01\15-2476m NOA Existing - Update 13-1017.09 for 2014 Florida Bldg Code.dwg
gordond
06/23/2016 - 2:08pm

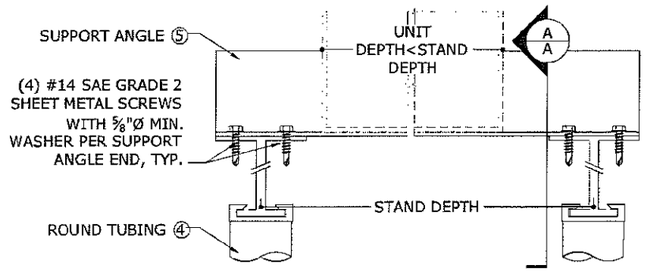

SUPPORT ANGLE ATTACHMENT DETAIL

1A / 10 — 3" = 1'-0"

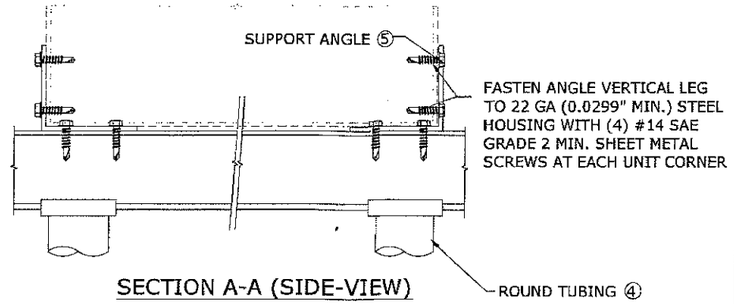

SECTION A-A (SIDE-VIEW)

ANCHOR SCHEDULE

ANCHOR TYPE	HOST STRUCTURE	ANCHOR DESCRIPTION
1	STEEL	3/8"Ø SAE GRADE 5 SHEET METAL SCREWS WITH 1"Ø MIN. WASHER, TO STRUCTURAL A36 STEEL MEMBERS (3/16" MIN HOST THICKNESS)
2	CONCRETE	3/8"Ø POWERS CARBON STEEL WEDGE-BOLT CONCRETE ANCHOR WITH 1"Ø MIN. WASHER, 2-1/2" EMBEDMENT & 6" MIN EDGE DISTANCE, SEE BASE PLATE COMPONENT #6 (ON SHEET 2) FOR TYPICAL ANCHOR SPACING.
3	WOOD*	***SEE DETAIL 4/10 OR SITE SPECIFIC ENGINEERING IS REQUIRED**
4	STEEL	3/8"Ø SAE GRADE 5 THRUBOLT WITH 1"Ø MIN. WASHER & NUT, TO STRUCTURAL A36 STEEL MEMBERS (3/16" MIN HOST THICKNESS)

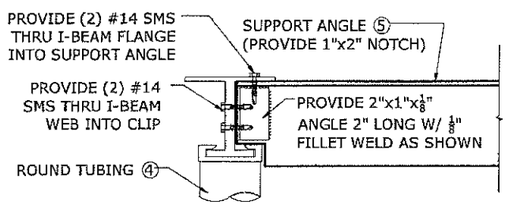

SUPPORT ANGLE ATTACHMENT DETAIL

1B / 10 — 3" = 1'-0"

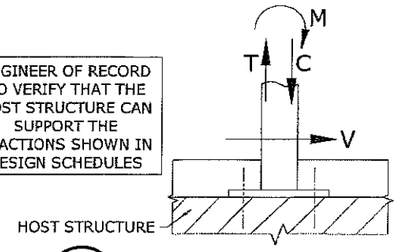

BASE PLATE REACTIONS

2 / 10 — 3" = 1'-0"

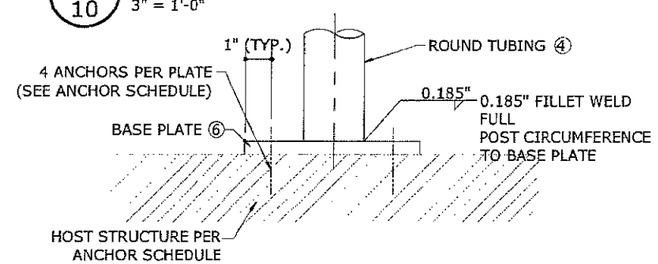

STANDARD BASE PLATE ATTACHMENT DETAIL

3 / 10 — SCALE: 3"=1'-0"

ANCHOR NOTES:

1. ANCHORS SHALL BE INSTALLED IN ACCORDANCE WITH MANUFACTURERS' RECOMMENDATIONS.
2. ENSURE MINIMUM EDGE DISTANCE AS NOTED IN ANCHOR SCHEDULE FOR EACH ANCHOR.
3. WOOD HOST STRUCTURE SHALL BE "SOUTHERN PINE" G=0.55 OR GREATER DENSITY. ALL CONCRETE SUBSTRATE SHALL BE UN-CRACKED CONCRETE AND SHALL HAVE MINIMUM COMPRESSIVE STRENGTH OF 3000 PSI. CONCRETE SUBSTRATE THICKNESS SHALL BE GREATER THAN OR EQUAL TO 1.5xANCHOR EMBEDMENT. INSTALL CONCRETE ANCHORS TO UN-CRACKED CONCRETE ONLY.
4. MINIMUM EMBEDMENT SHALL BE AS NOTED IN ANCHOR SCHEDULE. MINIMUM EMBEDMENT AND EDGE DISTANCE EXCLUDES ROOFING FINISHES.
5. WHERE EXISTING STRUCTURE IS WOOD TRUSSES, EXISTING CONDITIONS MAY VARY. FIELD VERIFY THAT FASTENERS ARE INTO ADEQUATE WOOD TRUSS MEMBERS, NOT INTO PLYWOOD.

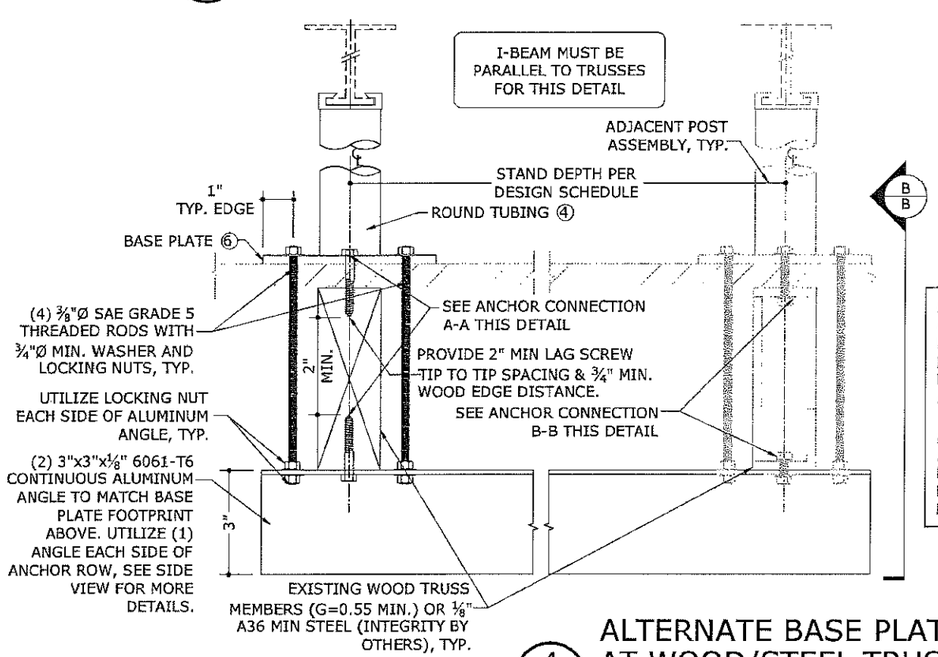

ANCHOR A-A (WOOD MEMBER)
ADD (4) 1/4"Ø LAG SCREW, 5/8"Ø MIN. WASHER, 3 1/2" MIN. EMBED, 3/4" MIN. EDGE DISTANCE. UTILIZE (2) TOP AND (2) BOTTOM, TYP.

ANCHOR B-B (STEEL MEMBER)
ADD (4) 3/8"Ø THRUBOLT, 3/4"Ø MIN. WASHER AND LOCKING NUT. UTILIZE (2) TOP AND (2) BOTTOM, TYP.

PRODUCT REVISED
as complying with the Florida Building Code
NOA-No. 16-0601.01
Expiration Date 01/15/2019
By
Miami-Dade Product Control

ALTERNATE BASE PLATE ATTACHMENT AT WOOD/STEEL TRUSS MEMBERS

4 / 10 — SCALE: 3"=1'-0"

DETAIL

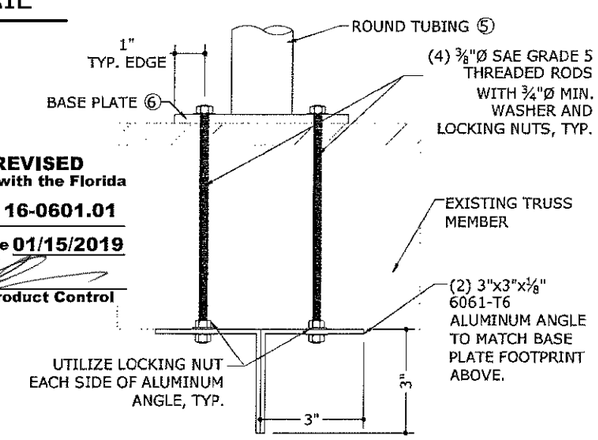

SECTION B-B (SIDE-VIEW)

FRANK J. BENNARDO, P.E.
PE 36540
06/23/2016
VALID FOR (1 YEAR) ONLY
ONLY W/ ORIGINAL ENGINEER SEAL
STATE OF FLORIDA
PROFESSIONAL ENGINEER

ENGINEERING EXPRESS
CORPORATE OFFICE
160 SW 12th AVE, SUITE 106
DEERFIELD BEACH, FL 33442
P: (954) 354-0660 F: (954) 354-0663
E: HELLO@ENGINEERINGEXPRESS.COM
ENGINEERINGEXPRESS.COM
CERT OF AUTH #9836

MIAMI TECH, INC
3611 NW 74TH STREET
MIAMI, FL 33147
PHONE:(305) 693-7054 FAX:(305) 693-6125

ALUMINUM A/C STAND
HVHZ COMPLAINT

REMARKS	DRWN	CHKD	DATE
INIT ISSUE	KL	CL	01/10/07
REV. TELESCOPIC BOLTS	KL	CL	05/03/07
UPDATE PER '07 FBC	TSB	CL	09/30/08
UPDATE PER '10 FBC	CSL	TSB	05/10/12
REV. PER COMMENTS	CSL	TSB	08/16/12
FBC UPDATE	RWN	CSL	07/07/15
REV PER MD COMMENTS	RWN	FLB	05/07/16

THIS DOCUMENT IS THE PROPERTY OF ENGINEERING EXPRESS AND SHALL NOT BE REPRODUCED IN WHOLE OR PART WITHOUT WRITTEN CONSENT OF THE CERTIFYING ENGINEER. ALTERATIONS, ADDITIONS, REPLACEMENTS, OR OTHER MODIFICATIONS TO THIS DOCUMENT SHALL NOT PERMITTED UNLESS SEALED, SIGNED AND DATED.
COPYRIGHT ENGINEERING EXPRESS

15-2476

SCALE: NTS

PAGE DESCRIPTION:
COVER SHEET

10 OF 10

06/23/2016 - 2:08pm gordond V:\Projects\15-2476 NOA Existing - Update 13-1017.09 for 2014 Florida Bldg Code-Project\WPMD Revision (6-23-16) - 16-0601.01\15-2476m NOA Existing - Update 13-1017.09 for 2014 Florida Bldg Code.dwg