MIAMI-DADE COUNTY
DEPARTMENT OF REGULATORY AND ECONOMIC RESOURCES (RER)
BOARD AND CODE ADMINISTRATION DIVISION

MIAMI-DADE COUNTY
PRODUCT CONTROL SECTION
11805 SW 26 Street, Room 208
T (786) 315-2590 F (786) 315-2599
www.miamidade.gov/economy

NOTICE OF ACCEPTANCE (NOA)

SIW Impact Windows, LLC
975 S. Congress Avenue, # 102
Delray Beach, FL 33445

SCOPE:

This NOA is being issued under the applicable rules and regulations governing the use of construction materials. The documentation submitted has been reviewed and accepted by Miami-Dade County RER – Product Control Section to be used in Miami-Dade County and other areas where allowed by the Authority Having Jurisdiction (AHJ).

This NOA shall not be valid after the expiration date stated below. The Miami-Dade County Product Control Section (In Miami–Dade County) and/ or the AHJ (in areas other than Miami-Dade County) reserve the right to have this product or material tested for quality assurance purposes. If this product or material fails to perform in the accepted manner, the manufacturer will incur the expense of such testing and the AHJ may immediately revoke, modify, or suspend the use of such product or material within their jurisdiction. RER reserves the right to revoke this acceptance, if it is determined by Miami–Dade County Product Control Section that this product or material fails to meet the requirements of the applicable building code.

This product is approved as described herein, and has been designed to comply with the Florida Building Code, including the High Velocity Hurricane Zone.

DESCRIPTION: Clipped, Extruded Aluminum Tube Mullion – L.M.I.

APPROVAL DOCUMENT: Drawing No. **M07-04**, titled "Aluminum Tube Mullions", sheets 1 through 18 of 18 and sheet 3.1, dated 10/01/07, with revision **F** dated 05/16/17, prepared by Al-Farooq Corporation, signed and sealed by Javad Ahmad, P.E., bearing the Miami-Dade County Product Control Revision stamp with the Notice of Acceptance number and expiration date by the Miami–Dade County Product Control Section.

MISSILE IMPACT RATING: Large and Small Missile Impact Resistant

LABELING: Each unit shall bear a permanent label with the manufacturer's name or logo, city, state, model/ series, and following statement: "Miami–Dade County Product Control Approved", unless otherwise noted herein.

RENEWAL of this NOA shall be considered after a renewal application has been filed and there has been no change in the applicable building code negatively affecting the performance of this product.

TERMINATION of this NOA will occur after the expiration date or if there has been a revision or change in the materials, use, and/ or manufacture of the product or process. Misuse of this NOA as an endorsement of any product, for sales, advertising or any other purposes shall automatically terminate this NOA. Failure to comply with any section of this NOA shall be cause for termination and removal of NOA.

ADVERTISEMENT: The NOA number preceded by the words Miami-Dade County, Florida, and followed by the expiration date may be displayed in advertising literature. If any portion of the NOA is displayed, then it shall be done in its entirety.

INSPECTION: A copy of this entire NOA shall be provided to the user by the manufacturer or its distributors and shall be available for inspection at the job site at the request of the Building Official.

This NOA **revises and renews NOA No. 15-0715.04** and consists of this page 1 and evidence pages E-1 and E-2, as well as approval document mentioned above.

The submitted documentation was reviewed by **Manuel Perez, P.E.**

MIAMI-DADE COUNTY APPROVED

8/14/17

SIW Impact Windows, LLC

NOTICE OF ACCEPTANCE: EVIDENCE SUBMITTED

A. DRAWINGS

1. Manufacturer's die drawings and sections.
   (Submitted under NOA No. 07-1016.06)
2. Drawing No. **M07-04**, titled "Aluminum Tube Mullions", sheets 1 through 18 of 18 and sheet 3.1, dated 10/01/07, with revision **F** dated 05/16/17, prepared by Al-Farooq Corporation, signed and sealed by Javad Ahmad, P.E.

B. TESTS

1. Test reports on: 1) Large Missile Impact Test per FBC, TAS 201-94
   2) Cyclic Wind Pressure Loading per FBC, TAS 203-94
   along with marked-up drawings and installation diagram of series 100 mulled single hung and fixed windows, prepared by Hurricane Engineering & Testing, Inc., Test Reports No. **HETI-07-4107**, dated 03/26/07 and **HETI-07-4115**, dated 04/09/07, both signed and sealed by Rafael E. Droz-Seda, P.E.
   (Submitted under NOA No. 07-1016.06)
2. Test reports on: 1) Air Infiltration Test, per FBC, TAS 202–94
   2) Uniform Static Air Pressure Test, Loading per FBC, TAS 202–94
   3) Water Resistance Test, per FBC, TAS 202–94
   4) Forced Entry Test, per FBC 2411.3.2.1, and TAS 202–94
   along with marked-up drawings and installation diagram of series 100 mulled single hung windows, prepared by Hurricane Engineering & Testing, Inc., Test Report No. **HETI-07-4108**, dated 03/26/07, signed and sealed by Rafael E. Droz-Seda, P.E.
   (Submitted under NOA No. 07-1016.06)

C. CALCULATIONS

1. Anchor verification calculations and structural analysis, complying with **FBC 5th Edition (2014)**, dated 07/10/15, and updated to the **FBC 6th Edition (2017)** on 06/29/17, prepared by Al-Farooq Corporation, signed and sealed by Javad Ahmad, P.E.

D. QUALITY ASSURANCE

1. Miami-Dade Department of Regulatory and Economic Resources (RER).

E. MATERIAL CERTIFICATIONS

1. None.

Manuel Perez, P.E.
Product Control Examiner
NOA No. 17-0717.02
Expiration Date: November 21, 2022
Approval Date:

NOTICE OF ACCEPTANCE: EVIDENCE SUBMITTED

F. STATEMENTS

1. Statement letter of conformance, complying with **FBC 6th Edition (2017)**, and of no financial interest, dated June 29, 2017, issued by Al-Farooq Corporation, signed and sealed by Javad Ahmad, P.E.
2. Laboratory compliance letter for Test Reports No. **HETI-07-4107**, dated 03/26/07, **HETI-07-4108**, dated 03/26/07 and **HETI-07-4115**, dated 04/09/07, all issued by Hurricane Engineering & Testing, Inc., signed and sealed by Rafael E. Droz–Seda, P.E.
   (Submitted under NOA No. 07-1016.06)

G. OTHERS

1. Notice of Acceptance No. **15-0715.04**, issued to SIW Impact Windows, LLC for their Clipped, Extruded Aluminum Tube Mullion – L.M.I., approved on 02/25/16 and expiring on 11/21/17.

Manuel Perez

Manuel Perez, P.E.
Product Control Examiner
NOA No. 17-0717.02
Expiration Date: November 21, 2022
Approval Date: August 24, 2017

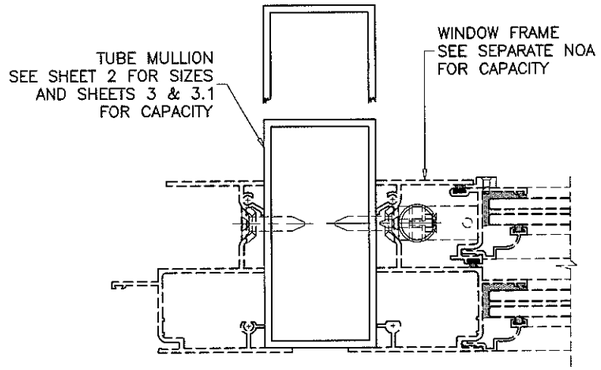

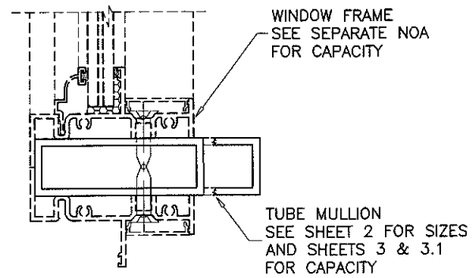

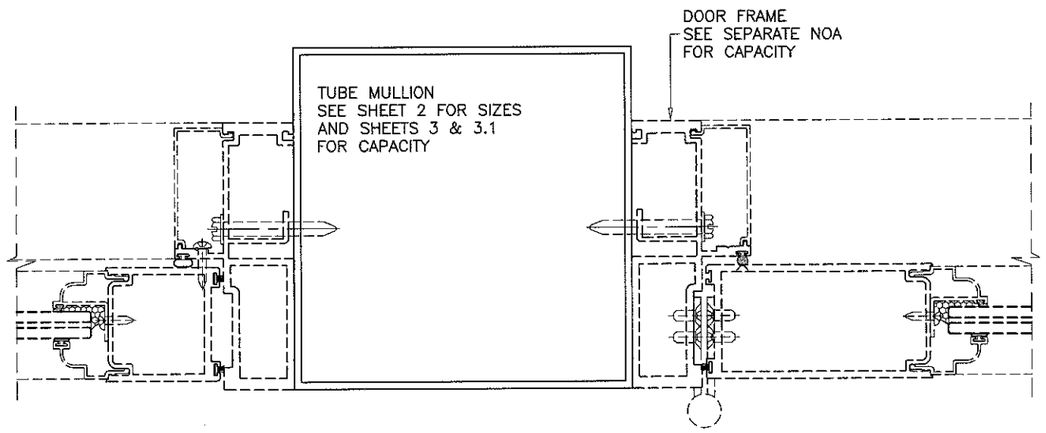

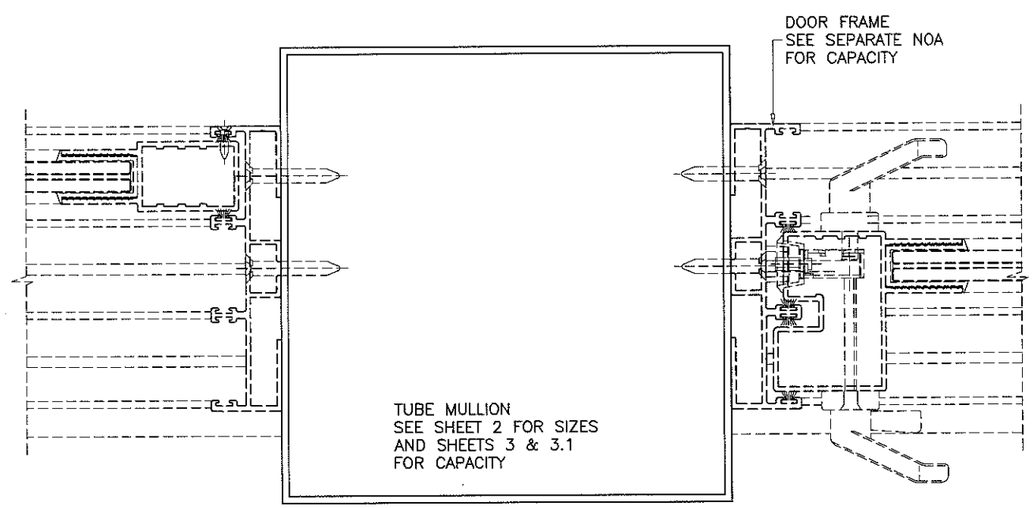

MULLIONS CONTAINING TYPICAL GLAZING PRODUCTS HORIZONTAL OR VERTICAL

SEE WINDOW OR DOOR APPROVAL FOR FASTENERS SIZES AND SPACING

RECTANGULAR ALUMINUM TUBE MULLIONS USING MULLION PROPERTIES ONLY

MULLION SYSTEM IS RATED FOR LARGE MISSILE IMPACT.
SEE SEPARATE NOA'S FOR WINDOWS/DOORS IMPACT AND LOAD RATINGS.
LOWER VALUES FROM MULLION APPROVAL OR WINDOW/DOOR NOA WILL APPLY TO ENTIRE SYSTEM.

THIS PRODUCT HAS BEEN DESIGNED AND TESTED TO COMPLY WITH THE REQUIREMENTS OF THE 2017 (6TH EDITION) FLORIDA BUILDING CODE INCLUDING HIGH VELOCITY HURRICANE ZONE (HVHZ).

ALL GLAZING PRODUCTS USED WITH THESE MULLIONS MUST MEET THE APPLICABLE BUILDING CODE REQUIREMENTS I.E: WIND LOAD, WATER INFILTRATION, FORCED ENTRY RESISTANCE, SAFEGUARDS ETC.

WOOD BUCKS BY OTHERS, MUST BE ANCHORED PROPERLY TO TRANSFER LOADS TO THE STRUCTURE.

ANCHORS SHALL BE AS LISTED, SPACED AS SHOWN ON DETAILS, EMBEDMENT TO BASE MATERIAL SHALL BE BEYOND WALL COVERING (STUCCO, TILE ETC.).

ANCHORING CONDITIONS OTHER THAN THOSE SHOWN IN THESE DETAILS ARE NOT PART OF THIS APPROVAL.

A LOAD DURATION INCREASE IS USED IN DESIGN OF ANCHORS INTO WOOD ONLY.

MATERIALS INCLUDING BUT NOT LIMITED TO STEEL/METAL SCREWS, THAT COME INTO CONTACT WITH OTHER DISSIMILAR MATERIALS SHALL MEET THE REQUIREMENTS OF THE 2017 FLORIDA BLDG. CODE & ADOPTED STANDARDS.

MANUFACTURER'S LABEL SHALL BE LOCATED ON A READILY VISIBLE LOCATION IN ACCORDANCE WITH CURRENT FLORIDA BUILDING CODE.

INSTRUCTIONS:

USE CHARTS AND GRAPHS AS FOLLOWS.

STEP 1 DETERMINE DESIGN LOAD REQUIRED PER ASCE 7 FOR PARTICULAR OPENING.

STEP 2 USE MIAMI-DADE COUNTY APPROVED GLAZING PRODUCTS MEETING ABOVE LOAD REQUIREMENTS.

STEP 3 USE GLAZING PRODUCT CONNECTION TO MULLION AS AS PER PRODUCT APPROVAL.

STEP 4 USING CHARTS ON SHEET 3 & 3.1 SELECT MULLION SIZE WITH DESIGN RATING MORE THAN DESIGN LOAD SPECIFIED IN STEP 1 ABOVE.

STEP 5 USING ANCHOR TYPES AND ANCHOR CAPACITY CHARTS ON SHEETS 4 THRU 18, SELECT ANCHOR TYPE WITH DESIGN RATING MORE THAN THE DESIGN LOADS SPECIFIED IN STEP 1 ABOVE.

THESE MULLIONS CAN ONLY BE USED WITH SIW GLAZING PRODUCTS

JUL 06 2017

PRODUCT REVISED
as complying with the Florida Building Code
Acceptance No 17-0717.02
Expiration Date Nov. 21, 2022
By Manuel Perez
Miami-Dade Product Control

JAVAD AHMAD
LICENSE
No. 70592
STATE OF FLORIDA
PROFESSIONAL ENGINEER

AL-FAROOQ CORPORATION
ENGINEERS & PRODUCT DEVELOPMENT
9360 SUNSET DRIVE, SUITE 220
MIAMI, FLORIDA 33173 (C.A.N. 3538)
TEL. (305) 264-8100 FAX. (305) 262-6978

MULLION\M07-04SIW

ALUMINUM TUBE MULLIONS

SIW IMPACT WINDOWS, LLC.
975 S. CONGRESS AVE. #102
DELRAY BEACH, FL. 33445
TEL. (561) 274-9392 FAX. (561) 274-9262

revisions:

no	date	by	description
C	12.06.11		UPDATED TO 2010 FBC
D	05.30.15		UPDATED TO 2014 FBC
E	02.15.16		REV. PER RER COMMENTS
F	05.16.17		UPDATED TO 2017 FBC

date: 10-01-07
scale: 3/8" = 1"
dr. by: TARIQ
chk. by:

drawing no. M07-04

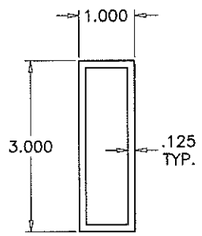

Ix = .9502 IN\4
Sx = .6335 IN\3

1 X 3
STD. MULLION
6063–T6

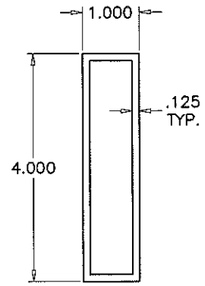

Ix = 2.0374 IN\4
Sx = 1.0187 IN\3

1 X 4
STD. MULLION
6063–T6

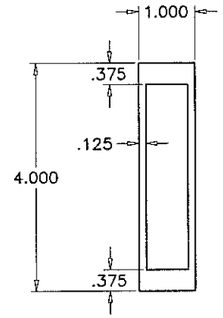

Ix = 3.1878 IN\4
Sx = 1.5939 IN\3

1 X 4
CUSTOM MULLION
6063–T6

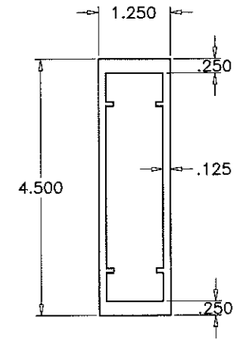

Ix = 4.2421 IN\4
Sx = 1.8854 IN\3

1–1/4 X 4–1/2
CUSTOM MULLION
6063–T6

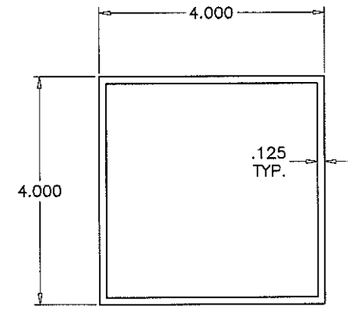

Ix = 4.8538 IN\4
Sx = 2.4269 IN\3

4 X 4
STD. MULLION
6063–T6

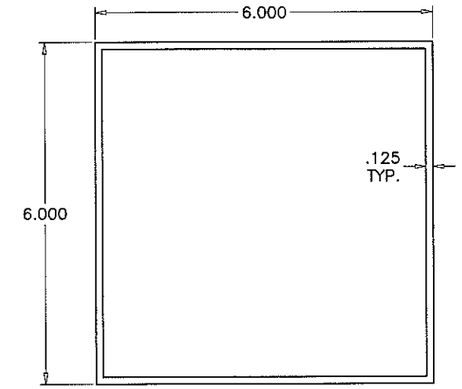

Ix = 16.9059 IN\4
Sx = 5.6353 IN\3

6 X 6
STD. MULLION
6063–T6

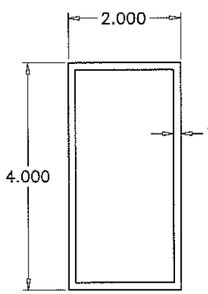

Ix = 2.9762 IN\4
Sx = 1.4881 IN\3

2 X 4
STD. MULLION
6063–T6

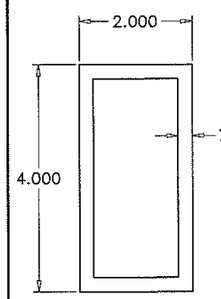

Ix = 5.3073 IN\4
Sx = 2.6536 IN\3

2 X 4
HEAVY MULLION
6063–T6

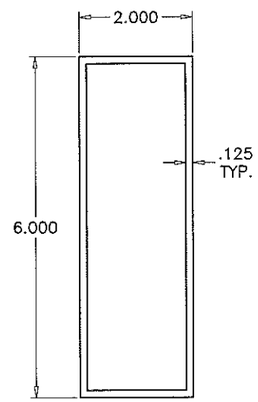

Ix = 8.2757 IN\4
Sx = 2.7586 IN\3

2 X 6
STD. MULLION
6063–T6

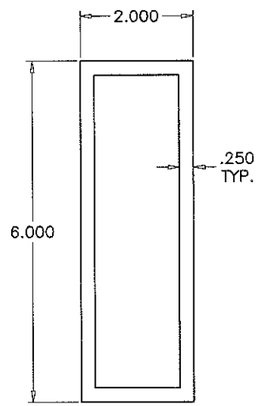

Ix = 15.2031 IN\4
Sx = 5.0677 IN\3

2 X 6
HEAVY MULLION
6063–T6

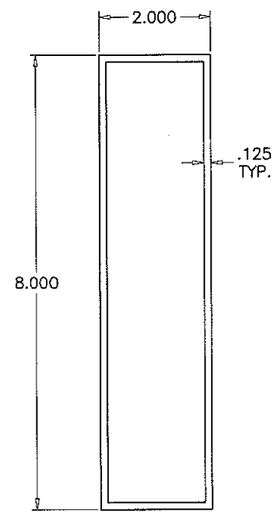

Ix = 17.4502 IN\4
Sx = 4.3625 IN\3

2 X 8
STD. MULLION
6063–T6

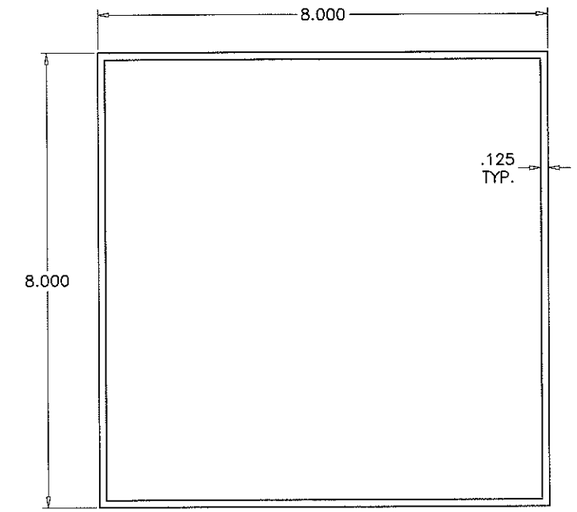

Ix = 40.7080 IN\4
Sx = 10.1770 IN\3

8 X 8
STD. MULLION
6063–T6

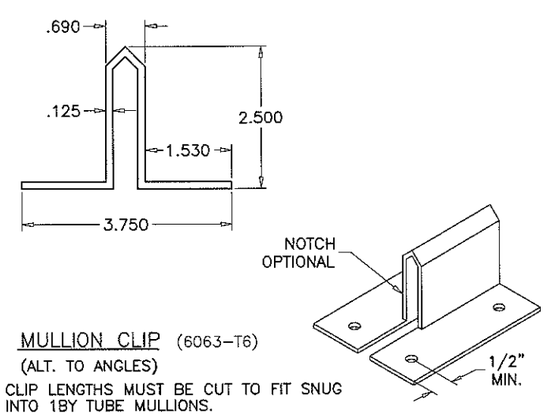

MULLION CLIP (6063–T6)
(ALT. TO ANGLES)
CLIP LENGTHS MUST BE CUT TO FIT SNUG INTO 1BY TUBE MULLIONS.

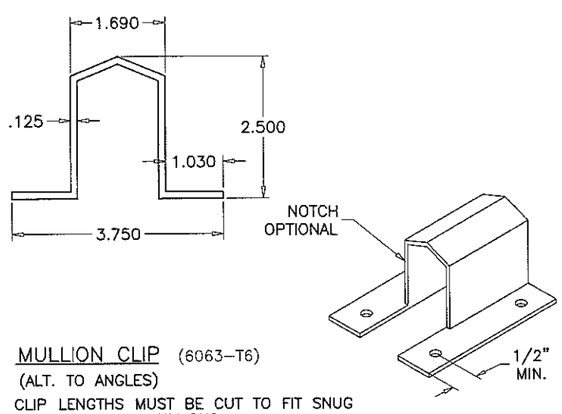

MULLION CLIP (6063–T6)
(ALT. TO ANGLES)
CLIP LENGTHS MUST BE CUT TO FIT SNUG INTO 2BY TUBE MULLIONS.

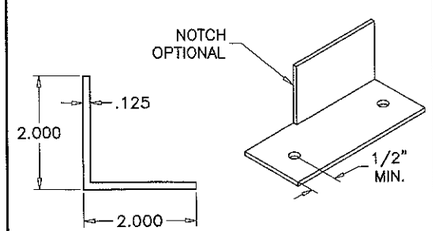

ANGLE CLIP
6063–T6

THESE MULLIONS CAN ONLY BE USED WITH SIW GLAZING PRODUCTS

JUL 06 2017

PRODUCT REVISED
as complying with the Florida
Building Code
Acceptance No 17-0717.02
Expiration Date Nov. 21, 2022
By Manuel Inez
Miami-Dade Product Control

JAVAD AHMAD
LICENSE
No. 70592
STATE OF FLORIDA
PROFESSIONAL ENGINEER

AL-FAROOQ CORPORATION
ENGINEERS & PRODUCT DEVELOPMENT
9360 SUNSET DRIVE, SUITE 220
MIAMI, FLORIDA 33173 (C.A.N. 3538)
TEL. (305) 264-8100 FAX. (305) 262-6978

MULLION\M07-04SIW

ALUMINUM TUBE MULLIONS

SIW IMPACT WINDOWS, LLC.
975 S. CONGRESS AVE. #102
DELRAY BEACH, FL. 33445
TEL. (561) 274-9392 FAX. (561) 274-9262

revisions:

no	date	by	description
C	12.06.11		NO CHANGE THIS SHEET
D	05.30.15		UPDATED TO 2014 FBC
E	02.15.16		NO CHANGE THIS SHEET
F	05.16.17		UPDATED TO 2017 FBC

date: 10-01-07
scale: 3/8" = 1"
dr. by: TARIQ
chk. by:

drawing no.
M07-04

DESIGN LOAD CAPACITY – PSF (TUBE MULLIONS)							
WINDOW DIMS.		1 X 3	1 X 4	1 X 4	1-1/4 X 4-1/2	2 X 4	2 X 4
WIDTH (W)	MULL SPAN	STD.	STD.	CUSTOM	CUSTOM	STD.	HEAVY
19-1/8"	38-3/8"	130.0	130.0	130.0	130.0	130.0	130.0
26-1/2"		130.0	130.0	130.0	130.0	130.0	130.0
30"		130.0	130.0	130.0	130.0	130.0	130.0
37"		130.0	130.0	130.0	130.0	130.0	130.0
42"		130.0	130.0	130.0	130.0	130.0	130.0
48"		130.0	130.0	130.0	130.0	130.0	130.0
54"		127.8	130.0	130.0	130.0	130.0	130.0
60"		115.0	130.0	130.0	130.0	130.0	130.0
66"		104.5	130.0	130.0	130.0	130.0	130.0
72"		95.8	130.0	130.0	130.0	130.0	130.0
19-1/8"	50-5/8"	130.0	130.0	130.0	130.0	130.0	130.0
26-1/2"		130.0	130.0	130.0	130.0	130.0	130.0
30"		130.0	130.0	130.0	130.0	130.0	130.0
37"		105.7	130.0	130.0	130.0	130.0	130.0
42"		93.1	130.0	130.0	130.0	130.0	130.0
48"		81.5	128.6	130.0	130.0	130.0	130.0
54"		72.4	114.3	130.0	130.0	130.0	130.0
60"		65.2	102.9	130.0	130.0	130.0	130.0
66"		59.3	93.5	130.0	130.0	130.0	130.0
72"		54.3	85.7	130.0	130.0	128.2	130.0
19-1/8"	63"	123.3	130.0	130.0	130.0	130.0	130.0
26-1/2"		89.0	130.0	130.0	130.0	130.0	130.0
30"		78.6	130.0	130.0	130.0	130.0	130.0
37"		63.7	106.2	130.0	130.0	130.0	130.0
42"		56.1	93.5	130.0	130.0	130.0	130.0
48"		49.1	81.8	124.0	130.0	122.7	130.0
54"		43.7	72.7	110.2	130.0	109.1	130.0
60"		39.3	65.5	99.2	118.8	98.2	130.0
66"		35.7	59.5	90.2	108.0	89.2	130.0
72"		32.8	54.6	82.7	99.0	81.8	130.0
19-1/8"	74-1/4"	75.3	130.0	130.0	130.0	130.0	130.0
26-1/2"		54.4	105.4	130.0	130.0	130.0	130.0
30"		48.0	93.1	130.0	130.0	130.0	130.0
37"		38.9	75.5	114.1	130.0	113.5	130.0
42"		34.3	66.5	100.5	120.4	100.0	130.0
48"		30.0	58.2	87.9	105.4	87.5	130.0
54"		26.7	51.7	78.1	93.7	77.8	130.0
60"		24.0	46.6	70.3	84.3	70.0	122.2
66"		21.8	42.3	63.9	76.6	63.6	111.1
72"		20.0	38.8	58.6	70.3	58.3	101.9
19-1/8"	78"	65.0	130.0	130.0	130.0	130.0	130.0
26-1/2"		46.9	95.2	130.0	130.0	130.0	130.0
30"		41.4	84.1	126.8	130.0	126.5	130.0
37"		33.6	68.2	102.8	123.3	102.6	130.0
42"		29.6	60.1	90.6	108.6	90.3	130.0
48"		25.9	52.5	79.3	95.1	79.1	130.0
54"		23.0	46.7	70.5	84.5	70.3	122.6
60"		20.7	42.0	63.4	76.1	63.2	110.4
66"		–	38.2	57.7	69.1	57.5	100.3
72"		–	35.0	52.9	63.4	52.7	92.0

ALL LOADS ARE EXT.(+)/INT.(–).

DESIGN LOAD CAPACITY – PSF (TUBE MULLIONS)							
WINDOW DIMS.		1 X 3	1 X 4	1 X 4	1-1/4 X 4-1/2	2 X 4	2 X 4
WIDTH (W)	MULL SPAN	STD.	STD.	CUSTOM	CUSTOM	STD.	HEAVY
19-1/8"	84"	52.0	111.5	130.0	130.0	130.0	130.0
26-1/2"		37.5	80.5	122.9	130.0	117.6	130.0
30"		33.2	71.1	108.5	130.0	103.9	130.0
37"		26.9	57.7	88.0	105.6	84.2	130.0
42"		23.7	50.8	77.5	93.0	74.2	130.0
48"		20.7	44.4	67.8	81.4	64.9	115.8
54"		–	39.5	60.3	72.4	57.7	102.9
60"		–	35.6	54.3	65.1	51.9	92.6
66"		–	32.3	49.3	59.2	47.2	84.2
72"		–	29.6	45.2	54.3	43.3	77.2
19-1/8"	96"	34.8	74.7	116.9	130.0	109.1	130.0
26-1/2"		25.1	53.9	84.4	111.4	78.8	130.0
30"		22.2	47.6	74.5	98.4	69.6	124.1
37"		–	38.6	60.4	79.8	56.4	100.6
42"		–	34.0	53.2	70.3	49.7	88.6
48"		–	29.8	46.6	61.5	43.5	77.6
54"		–	26.5	41.4	54.7	38.7	68.9
60"		–	23.8	37.3	49.2	34.8	62.0
66"		–	21.7	33.9	44.7	31.6	56.4
72"		–	–	31.1	41.0	29.0	51.7
19-1/8"	108"	24.5	52.5	82.1	109.3	76.7	130.0
26-1/2"		–	37.9	59.3	78.9	55.3	98.7
30"		–	33.5	52.3	69.7	48.9	87.1
37"		–	27.1	42.4	56.5	39.6	70.7
42"		–	23.9	37.4	49.8	34.9	62.2
48"		–	20.9	32.7	43.5	30.5	54.5
54"		–	–	29.1	38.7	27.1	48.4
60"		–	–	26.2	34.8	24.4	43.6
66"		–	–	23.8	31.7	22.2	39.6
72"		–	–	21.8	29.0	20.4	36.3
19-1/8"	120"	–	38.3	59.9	79.7	55.9	99.7
26-1/2"		–	27.6	43.2	57.5	40.3	71.9
30"		–	24.4	38.2	50.8	35.6	63.5
37"		–	–	30.9	41.2	28.9	51.5
42"		–	–	27.3	36.3	25.4	45.4
48"		–	–	23.8	31.7	22.3	39.7
54"		–	–	21.2	28.2	–	35.3
60"		–	–	–	25.4	–	31.8
66"		–	–	–	23.1	–	28.9
72"		–	–	–	21.2	–	26.5
19-1/8"	132"	–	28.7	45.0	59.8	42.0	74.9
26-1/2"		–	20.7	32.5	43.2	30.3	54.0
30"		–	–	28.7	38.2	26.8	47.7
37"		–	–	23.2	30.9	21.7	38.7
42"		–	–	20.5	27.3	–	34.1
48"		–	–	–	23.8	–	29.8
54"		–	–	–	21.2	–	26.5
60"		–	–	–	–	–	23.9
66"		–	–	–	–	–	21.7
72"		–	–	–	–	–	–
19-1/8"	144"	–	22.1	34.6	46.1	32.3	57.7
26-1/2"		–	–	25.0	33.3	23.3	41.6
30"		–	–	22.1	29.4	20.6	36.8
37"		–	–	–	23.8	–	29.8
42"		–	–	–	21.0	–	26.3
48"		–	–	–	–	–	23.0
54"		–	–	–	–	–	20.4

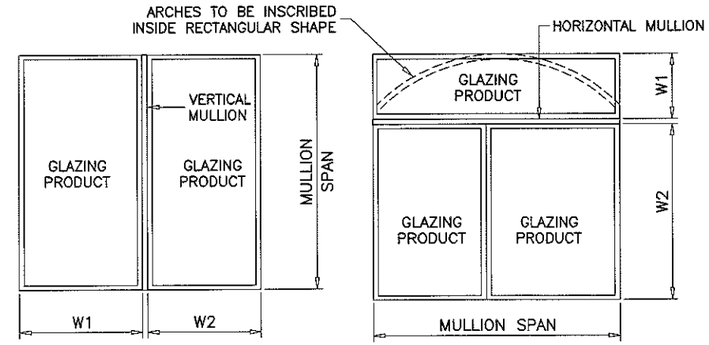

TYPICAL MULLION ARRANGEMENTS

$$\text{WIDTH (W)} = \frac{W1 + W2}{2}$$

NOTE:
MULLIONS RATED IN THESE CHARTS MAY BE ORIENTED VERTICALLY OR HORIZONTALLY.
(INTERPOLATION BETWEEN WIDTHS ALLOWED)

THESE MULLIONS CAN ONLY BE USED WITH SIW GLAZING PRODUCTS

MULLIONS

JUL 06 2022

PRODUCT REVISED
as complying with the Florida Building Code
Acceptance No 17-0717.02
Expiration Date Nov. 21, 2022
By Manuel Perez
Miami Dade Product Control

JAVAD AHMAD
LICENSE
No. 70592
STATE OF FLORIDA
PROFESSIONAL ENGINEER

AL-FAROOQ CORPORATION
ENGINEERS & PRODUCT DEVELOPMENT
9360 SUNSET DRIVE, SUITE 220
MIAMI, FLORIDA 33173 (C.A.N. 3538)
TEL. (305) 264-8100 FAX. (305) 262-6978

MULLION\M07-04SIW

ALUMINUM TUBE MULLIONS

SIW IMPACT WINDOWS, LLC.
975 S. CONGRESS AVE. #102
DELRAY BEACH, FL. 33445
TEL. (561) 274-9392 FAX. (561) 274-9262

revisions:

no	date	by	description
C	12.06.11		NO CHANGE THIS SHEET
D	05.30.15		UPDATED TO 2014 FBC
E	02.15.16		NO CHANGE THIS SHEET
F	05.16.17		UPDATED TO 2017 FBC

date: 10-01-07
scale: 1/2" = 1"
dr. by: TARIQ
chk. by:

drawing no.
M07-04

DESIGN LOAD CAPACITY – PSF (TUBE MULLIONS)							
WINDOW DIMS.		4 X 4	2 X 6	2 X 6	2 X 8	6 X 6	8 X 8
WIDTH (W)	MULL SPAN	STD.	STD.	HEAVY	STD.	STD.	STD.
19-1/8"	38-3/8"	130.0	130.0	130.0	130.0	130.0	130.0
26-1/2"		130.0	130.0	130.0	130.0	130.0	130.0
30"		130.0	130.0	130.0	130.0	130.0	130.0
37"		130.0	130.0	130.0	130.0	130.0	130.0
42"		130.0	130.0	130.0	130.0	130.0	130.0
48"		130.0	130.0	130.0	130.0	130.0	130.0
54"		130.0	130.0	130.0	130.0	130.0	130.0
60"		130.0	130.0	130.0	130.0	130.0	130.0
66"		130.0	130.0	130.0	130.0	130.0	130.0
72"		130.0	130.0	130.0	130.0	130.0	130.0
19-1/8"	50-5/8"	130.0	130.0	130.0	130.0	130.0	130.0
26-1/2"		130.0	130.0	130.0	130.0	130.0	130.0
30"		130.0	130.0	130.0	130.0	130.0	130.0
37"		130.0	130.0	130.0	130.0	130.0	130.0
42"		130.0	130.0	130.0	130.0	130.0	130.0
48"		130.0	130.0	130.0	130.0	130.0	130.0
54"		130.0	130.0	130.0	130.0	130.0	130.0
60"		130.0	130.0	130.0	130.0	130.0	130.0
66"		130.0	130.0	130.0	130.0	130.0	130.0
72"		130.0	130.0	130.0	130.0	130.0	130.0
19-1/8"	63"	130.0	130.0	130.0	130.0	130.0	130.0
26-1/2"		130.0	130.0	130.0	130.0	130.0	130.0
30"		130.0	130.0	130.0	130.0	130.0	130.0
37"		130.0	130.0	130.0	130.0	130.0	130.0
42"		130.0	130.0	130.0	130.0	130.0	130.0
48"		130.0	130.0	130.0	130.0	130.0	130.0
54"		130.0	130.0	130.0	130.0	130.0	130.0
60"		130.0	130.0	130.0	130.0	130.0	130.0
66"		130.0	130.0	130.0	130.0	130.0	130.0
72"		130.0	130.0	130.0	130.0	130.0	130.0
19-1/8"	74-1/4"	130.0	130.0	130.0	130.0	130.0	130.0
26-1/2"		130.0	130.0	130.0	130.0	130.0	130.0
30"		130.0	130.0	130.0	130.0	130.0	130.0
37"		130.0	130.0	130.0	130.0	130.0	130.0
42"		130.0	130.0	130.0	130.0	130.0	130.0
48"		130.0	130.0	130.0	130.0	130.0	130.0
54"		129.0	130.0	130.0	130.0	130.0	130.0
60"		116.1	125.9	130.0	130.0	130.0	130.0
66"		105.6	114.5	130.0	130.0	130.0	130.0
72"		96.8	105.0	130.0	130.0	130.0	130.0
19-1/8"	78"	130.0	130.0	130.0	130.0	130.0	130.0
26-1/2"		130.0	130.0	130.0	130.0	130.0	130.0
30"		130.0	130.0	130.0	130.0	130.0	130.0
37"		130.0	130.0	130.0	130.0	130.0	130.0
42"		130.0	130.0	130.0	130.0	130.0	130.0
48"		130.0	130.0	130.0	130.0	130.0	130.0
54"		116.6	126.3	130.0	130.0	130.0	130.0
60"		105.0	113.7	130.0	130.0	130.0	130.0
66"		95.4	103.4	130.0	130.0	130.0	130.0
72"		87.5	94.7	130.0	130.0	130.0	130.0

ALL LOADS ARE EXT.(+)/INT.(–).

DESIGN LOAD CAPACITY – PSF (TUBE MULLIONS)							
WINDOW DIMS.		4 X 4	2 X 6	2 X 6	2 X 8	6 X 6	8 X 8
WIDTH (W)	MULL SPAN	STD.	STD.	HEAVY	STD.	STD.	STD.
19-1/8"	84"	130.0	130.0	130.0	130.0	130.0	130.0
26-1/2"		130.0	130.0	130.0	130.0	130.0	130.0
30"		130.0	130.0	130.0	130.0	130.0	130.0
37"		130.0	130.0	130.0	130.0	130.0	130.0
42"		121.0	130.0	130.0	130.0	130.0	130.0
48"		105.9	121.8	130.0	130.0	130.0	130.0
54"		94.1	108.3	130.0	130.0	130.0	130.0
60"		84.7	97.4	130.0	130.0	130.0	130.0
66"		77.0	88.6	130.0	130.0	130.0	130.0
72"		70.6	81.2	130.0	124.6	130.0	130.0
19-1/8"	96"	130.0	130.0	130.0	130.0	130.0	130.0
26-1/2"		128.5	130.0	130.0	130.0	130.0	130.0
30"		113.5	130.0	130.0	130.0	130.0	130.0
37"		92.0	119.6	130.0	130.0	130.0	130.0
42"		81.1	105.3	130.0	130.0	130.0	130.0
48"		70.9	92.2	130.0	130.0	130.0	130.0
54"		63.0	81.9	130.0	125.4	130.0	130.0
60"		56.7	73.7	130.0	112.9	130.0	130.0
66"		51.6	67.0	119.0	102.6	130.0	130.0
72"		47.3	61.4	109.1	94.1	130.0	130.0
19-1/8"	108"	125.0	130.0	130.0	130.0	130.0	130.0
26-1/2"		90.2	130.0	130.0	130.0	130.0	130.0
30"		79.7	115.2	130.0	130.0	130.0	130.0
37"		64.6	93.4	130.0	130.0	130.0	130.0
42"		56.9	82.3	130.0	125.7	130.0	130.0
48"		49.8	72.0	127.6	110.0	130.0	130.0
54"		44.3	64.0	113.4	97.8	130.0	130.0
60"		39.9	57.6	102.1	88.0	122.9	130.0
66"		36.2	52.4	92.8	80.0	111.8	130.0
72"		33.2	48.0	85.0	73.3	102.4	130.0
19-1/8"	120"	91.1	130.0	130.0	130.0	130.0	130.0
26-1/2"		65.8	104.6	130.0	130.0	130.0	130.0
30"		58.1	92.4	130.0	130.0	130.0	130.0
37"		47.1	74.9	130.0	114.1	130.0	130.0
42"		41.5	66.0	116.6	100.5	130.0	130.0
48"		36.3	57.7	102.0	88.0	123.5	130.0
54"		32.3	51.3	90.7	78.2	109.8	130.0
60"		29.1	46.2	81.6	70.4	98.8	130.0
66"		26.4	42.0	74.2	64.0	89.8	130.0
72"		24.2	38.5	68.0	58.6	82.3	130.0
19-1/8"	132"	68.5	116.7	130.0	130.0	130.0	130.0
26-1/2"		49.4	84.3	130.0	130.0	130.0	130.0
30"		43.7	74.4	130.0	114.9	130.0	130.0
37"		35.4	60.3	108.0	93.2	123.3	130.0
42"		31.2	53.2	95.1	82.1	108.6	130.0
48"		27.3	46.5	83.3	71.8	95.0	130.0
54"		24.3	41.3	74.0	63.8	84.5	130.0
60"		21.8	37.2	66.6	57.4	76.0	130.0
66"		–	33.8	60.5	52.2	69.1	130.0
72"		–	31.0	55.5	47.9	63.4	120.4
19-1/8"	144"	52.7	89.9	130.0	130.0	130.0	130.0
26-1/2"		38.1	64.9	119.2	108.0	130.0	130.0
30"		33.6	57.3	105.3	95.4	117.1	130.0
37"		27.3	46.5	85.4	77.3	95.0	130.0
42"		24.0	40.9	75.2	68.1	83.7	130.0
48"		21.0	35.8	65.8	59.6	73.2	130.0
54"		–	31.8	58.5	53.0	65.1	130.0

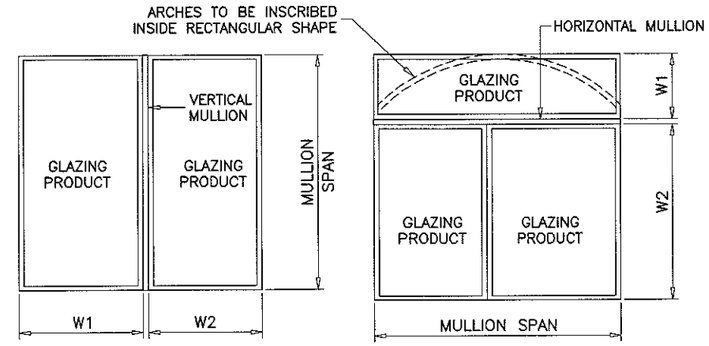

TYPICAL MULLION ARRANGEMENTS

$$\text{WIDTH (W)} = \frac{W1 + W2}{2}$$

NOTE:
MULLIONS RATED IN THESE CHARTS MAY BE ORIENTED VERTICALLY OR HORIZONTALLY.
(INTERPOLATION BETWEEN WIDTHS ALLOWED)

THESE MULLIONS CAN ONLY BE USED WITH SIW GLAZING PRODUCTS

MULLIONS

JUL 06 2017

PRODUCT REVISED
as complying with the Florida
Building Code
Acceptance No 17.0717.02
Expiration Date Nov. 21, 2022
By Manuel Perez
Miami Dade Product Control

JAVAD AHMAD
LICENSE
No. 70592
STATE OF FLORIDA
PROFESSIONAL ENGINEER

AL-FAROOQ CORPORATION
ENGINEERS & PRODUCT DEVELOPMENT
9360 SUNSET DRIVE, SUITE 220
MIAMI, FLORIDA 33173 (C.A.N. 3538)
TEL. (305) 264-8100 FAX. (305) 262-6978

MULLION\M07-04SIW

ALUMINUM TUBE MULLIONS

SIW IMPACT WINDOWS, LLC.
975 S. CONGRESS AVE. #102
DELRAY BEACH, FL. 33445
TEL. (561) 274-9392 FAX. (561) 274-9262

revisions:

no	date	by	description
F	05.16.17		UPDATED TO 2017 FBC

date: 10-01-07
scale: 1/2" = 1"
dr. by: TARIQ
chk. by:

drawing no.
M07-04

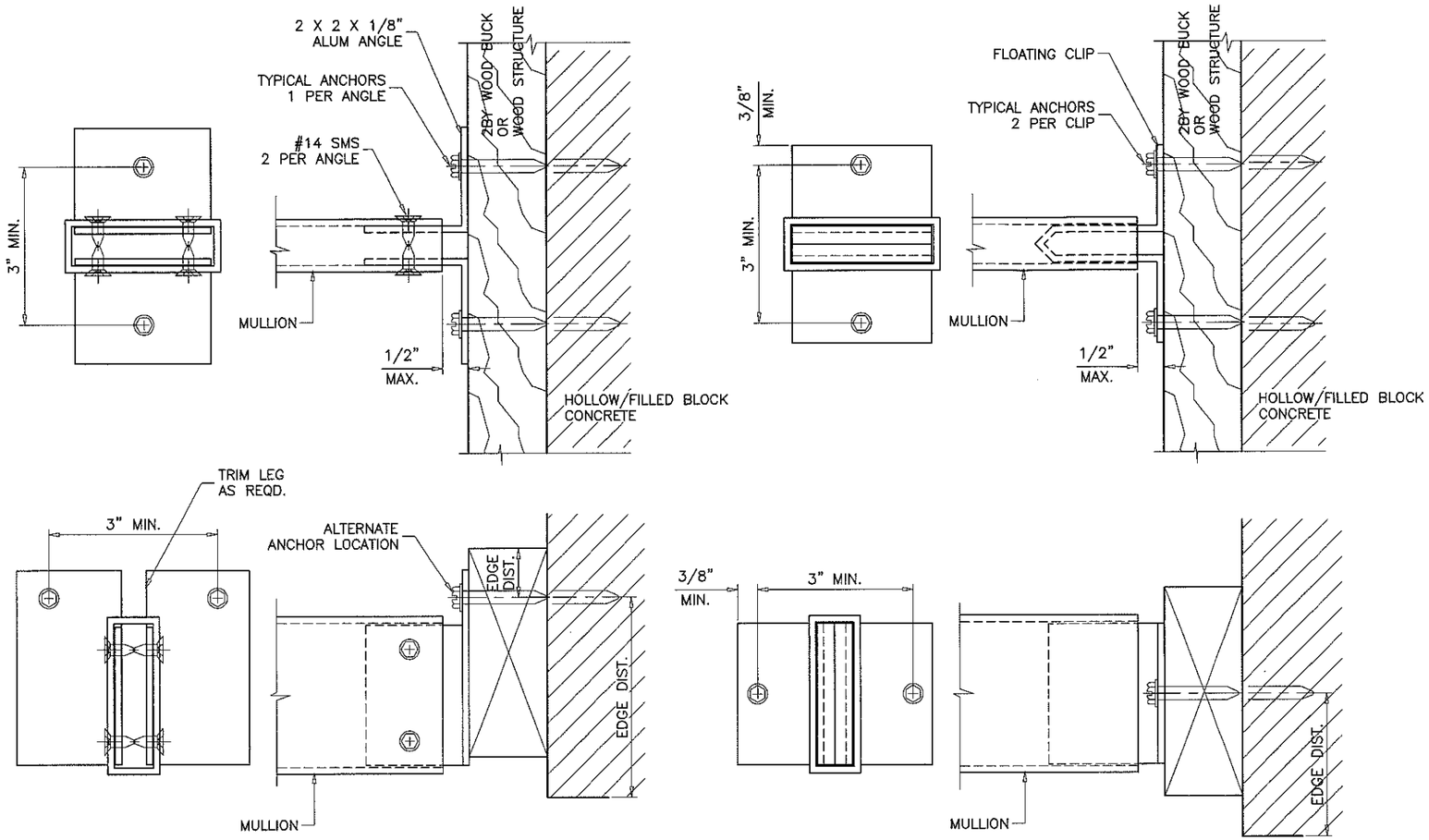

TYPICAL ANCHORS TYPE 'W2'

INTO 2BY WOOD BUCKS OR WOOD STRUCTURES
THRU 1BY BUCKS INTO CONC. OR MASONRY

SEE SHEET 6 FOR ANCHOR CAPACITIES

THESE MULLIONS CAN ONLY BE USED WITH SIW GLAZING PRODUCTS

JUL 05 2017

PRODUCT REVISED
as complying with the Florida
Building Code
Acceptance No 17-0717.07
Expiration Date Nov 21, 2022
By Manuel Perez
Miami Dade Product Control

JAVAD AHMAD
LICENSE
No. 70592
STATE OF FLORIDA
PROFESSIONAL ENGINEER

AL-FAROOQ CORPORATION
ENGINEERS & PRODUCT DEVELOPMENT
9360 SUNSET DRIVE, SUITE 220
MIAMI, FLORIDA 33173 (C.A.N. 3538)
TEL. (305) 264-8100 FAX. (305) 262-6978

MULLION\M07-04SIW

ALUMINUM TUBE MULLIONS

SIW IMPACT WINDOWS, LLC.
975 S. CONGRESS AVE. #102
DELRAY BEACH, FL. 33445
TEL. (561) 274-9392 FAX. (561) 274-9262

revisions:

no	date	by	description
C	12.06.11		NO CHANGE THIS SHEET
D	05.30.15		UPDATED TO 2014 FBC
E	02.15.16		NO CHANGE THIS SHEET
F	05.16.17		UPDATED TO 2017 FBC

date: 10-01-07
scale: 3/8" = 1"
dr. by: TARIQ
chk. by:

drawing no.
M07-04

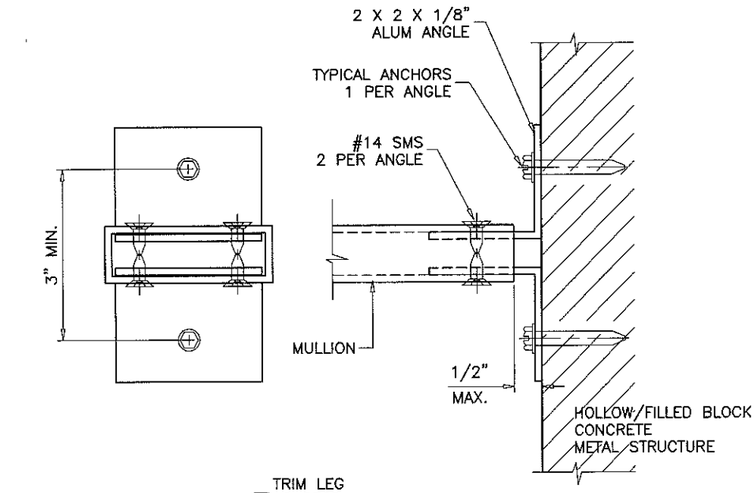

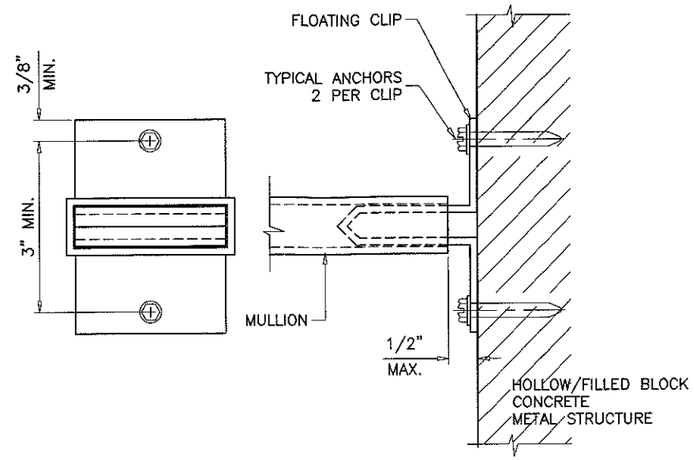

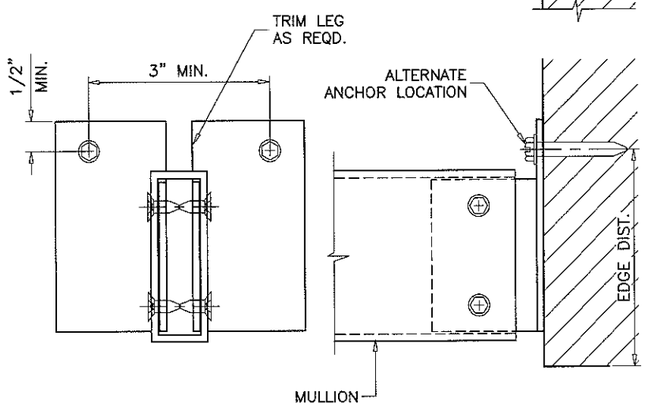

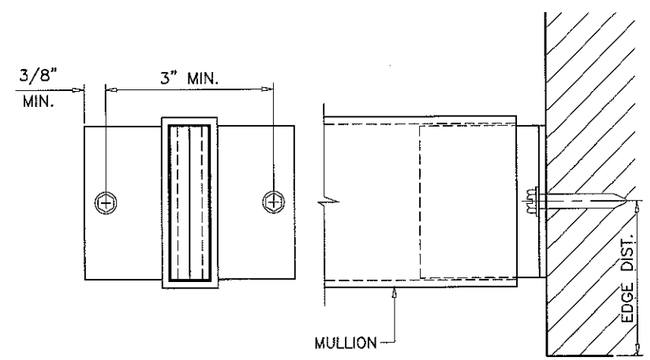

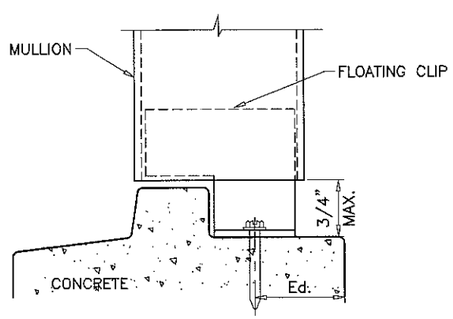

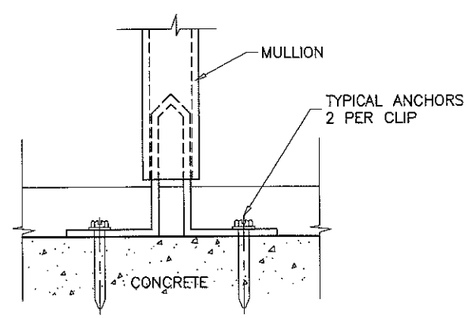

TYPICAL ANCHORS TYPE 'B2', 'C2', 'M2'

DIRECTLY INTO HOLLOW/FILLED BLOCK
DIRECTLY INTO CONCRETE
INTO METAL STRUCTURES

SEE SHEET 6 FOR ANCHOR CAPACITIES

THESE MULLIONS CAN ONLY BE USED WITH SIW GLAZING PRODUCTS

PRODUCT REVISED
as complying with the Florida
Building Code
Acceptance No 17-0717.02
Expiration Date Nov. 21, 2022
By Manuel Perez
Miami Dade Product Control
JUL 06 2017

JAVAD AHMAD
LICENSE
No. 70592
STATE OF FLORIDA
PROFESSIONAL ENGINEER

AL-FAROOQ CORPORATION
ENGINEERS & PRODUCT DEVELOPMENT
9360 SUNSET DRIVE, SUITE 220
MIAMI, FLORIDA 33173 (C.A.N. 3538)
TEL. (305) 264-8100 FAX. (305) 262-6978

MULLION\M07-04SIW

ALUMINUM TUBE MULLIONS

SIW IMPACT WINDOWS, LLC.
975 S. CONGRESS AVE. #102
DELRAY BEACH, FL. 33445
TEL. (561) 274-9392 FAX. (561) 274-9262

revisions:

no	date	by	description
C	12.06.11		NO CHANGE THIS SHEET
D	05.30.15		UPDATED TO 2014 FBC
E	02.15.16		NO CHANGE THIS SHEET
F	05.16.17		UPDATED TO 2017 FBC

date: 10-01-07
scale: 3/8" = 1"
dr. by: TARIQ
chk. by:

drawing no.
M07-04

DESIGN LOAD CAPACITY – PSF					
WINDOW DIMS.		ANCHORS TYPE			
WIDTH (W)	MULL SPAN	W2	B2	C2	M2
19–1/8"	38–3/8"	130.0	117.7	130.0	130.0
26–1/2"		130.0	85.0	130.0	130.0
30"		129.1	75.0	130.0	130.0
37"		104.7	60.9	130.0	130.0
42"		92.2	53.6	119.4	130.0
48"		80.7	46.9	104.4	122.1
54"		71.7	41.7	92.8	108.5
60"		64.5	37.5	83.6	97.7
66"		58.7	34.1	76.0	88.8
72"		53.8	31.3	69.6	81.4
19–1/8"	50–5/8"	130.0	89.2	130.0	130.0
26–1/2"		110.8	64.4	130.0	130.0
30"		97.8	56.9	126.7	130.0
37"		79.3	46.1	102.7	120.1
42"		69.9	40.6	90.5	105.8
48"		61.2	35.6	79.2	92.6
54"		54.4	31.6	70.4	82.3
60"		48.9	28.4	63.3	74.1
66"		44.5	25.9	57.6	67.3
72"		40.8	23.7	52.8	61.7
19–1/8"	63"	123.3	71.7	130.0	130.0
26–1/2"		89.0	51.8	115.2	130.0
30"		78.6	45.7	101.8	119.0
37"		63.8	37.1	82.5	96.5
42"		56.2	32.7	72.7	85.0
48"		49.1	28.6	63.6	74.4
54"		43.7	25.4	56.6	66.1
60"		39.3	22.9	50.9	59.5
66"		35.7	20.8	46.3	54.1
72"		32.8	–	42.4	49.6
19–1/8"	74–1/4"	104.7	60.8	130.0	130.0
26–1/2"		75.5	43.9	97.8	114.3
30"		66.7	38.8	86.4	101.0
37"		54.1	31.4	70.0	81.9
42"		47.7	27.7	61.7	72.1
48"		41.7	24.2	54.0	63.1
54"		37.1	21.5	48.0	56.1
60"		33.4	–	43.2	50.5
66"		30.3	–	39.3	45.9
72"		27.8	–	36.0	42.1

DESIGN LOAD CAPACITY – PSF					
WINDOW DIMS.		ANCHORS TYPE			
WIDTH (W)	MULL SPAN	W2	B2	C2	M2
19–1/8"	78"	99.6	57.9	129.0	130.0
26–1/2"		71.9	41.8	93.1	108.8
30"		63.5	36.9	82.2	96.1
37"		51.5	29.9	66.7	77.9
42"		45.4	26.4	58.7	68.7
48"		39.7	23.1	51.4	60.1
54"		35.3	20.5	45.7	53.4
60"		31.8	–	41.1	48.1
66"		28.9	–	37.4	43.7
72"		26.5	–	34.3	40.1
19–1/8"	84"	92.5	53.8	119.8	130.0
26–1/2"		66.8	38.8	86.4	101.0
30"		59.0	34.3	76.3	89.3
37"		47.8	27.8	61.9	72.4
42"		42.1	24.5	54.5	63.8
48"		36.9	21.4	47.7	55.8
54"		32.8	–	42.4	49.6
60"		29.5	–	38.2	44.6
66"		26.8	–	34.7	40.6
72"		24.6	–	31.8	37.2
19–1/8"	96"	80.9	47.1	104.8	122.5
26–1/2"		58.4	34.0	75.6	88.4
30"		51.6	30.0	66.8	78.1
37"		41.8	24.3	54.2	63.3
42"		36.9	21.4	47.7	55.8
48"		32.3	–	41.8	48.8
54"		28.7	–	37.1	43.4
60"		25.8	–	33.4	39.1
66"		23.5	–	30.4	35.5
72"		21.5	–	27.8	32.5
19–1/8"	108"	71.9	41.8	93.1	108.9
26–1/2"		51.9	30.2	67.2	78.6
30"		45.9	26.7	59.4	69.4
37"		37.2	21.6	48.1	56.3
42"		32.8	–	42.4	49.6
48"		28.7	–	37.1	43.4
54"		25.5	–	33.0	38.6
60"		22.9	–	29.7	34.7
66"		20.8	–	27.0	31.6
72"		–	–	24.7	28.9

DESIGN LOAD CAPACITY – PSF					
WINDOW DIMS.		ANCHORS TYPE			
WIDTH (W)	MULL SPAN	W2	B2	C2	M2
19–1/8"	120"	64.8	37.6	83.8	98.0
26–1/2"		46.7	27.2	60.5	70.7
30"		41.3	24.0	53.4	62.5
37"		33.5	–	43.3	50.7
42"		29.5	–	38.2	44.6
48"		25.8	–	33.4	39.1
54"		22.9	–	29.7	34.7
60"		20.6	–	26.7	31.2
66"		–	–	24.3	28.4
72"		–	–	22.3	26.0
19–1/8"	132"	58.9	34.2	76.2	89.1
26–1/2"		42.5	24.7	55.0	64.3
30"		37.5	21.8	48.6	56.8
37"		30.4	–	39.4	46.1
42"		26.8	–	34.7	40.6
48"		23.5	–	30.4	35.5
54"		20.8	–	27.0	31.6
60"		–	–	24.3	28.4
66"		–	–	22.1	25.8
72"		–	–	20.2	23.7
19–1/8"	144"	54.0	31.4	69.9	81.7
26–1/2"		38.9	22.6	50.4	58.9
30"		34.4	20.0	44.5	52.1
37"		27.9	–	36.1	42.2
42"		24.6	–	31.8	37.2
48"		21.5	–	27.8	32.5
54"		–	–	24.7	28.9
60"		–	–	22.3	26.0
66"		–	–	20.2	23.7

ALL LOADS ARE EXT.(+)/INT.(–).

TYPICAL ANCHORS:

1/4" DIA. ULTRACON BY 'ELCO' (Fu=177 KSI, Fy=155 KSI)

W2: INTO 2BY WOOD BUCKS OR WOOD STRUCTURES
1–1/2" MIN. PENETRATION INTO WOOD

W2: THRU 1BY BUCKS INTO CONC. OR MASONRY
1–1/4" MIN. EMBED INTO CONC. OR MASONRY

B2: DIRECTLY INTO HOLLOW/FILLED BLOCK
1–1/4" MIN. EMBED INTO BLOCK

C2: DIRECTLY INTO CONCRETE
1–1/2" MIN. EMBED INTO CONCRETE

1/4" DIA. TEKS OR SELF DRILLING SCREWS (GRADE 5 CRS)

M2: INTO METAL STRUCTURES
STEEL : 1/8" THK. MIN. (Fy = 36 KSI MIN.)
ALUMINUM : 1/8" THK. MIN. (6063–T5 MIN.)
(STEEL IN CONTACT WITH ALUMINUM TO BE PLATED OR PAINTED)

TYPICAL EDGE DISTANCE

INTO CONCRETE AND MASONRY = 2–1/2" MIN.
INTO WOOD STRUCTURE = 1" MIN.
INTO METAL STRUCTURE = 3/4" MIN.

WOOD AT HEAD, SILL OR JAMBS SG = 0.55 MIN.
CONCRETE AT HEAD, SILL OR JAMBS f'c = 3000 PSI MIN.
C–90 HOLLOW/FILLED NORMAL WEIGHT BLOCK AT JAMBS f'm = 2000 PSI MIN.

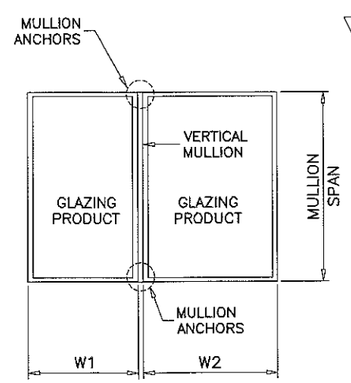

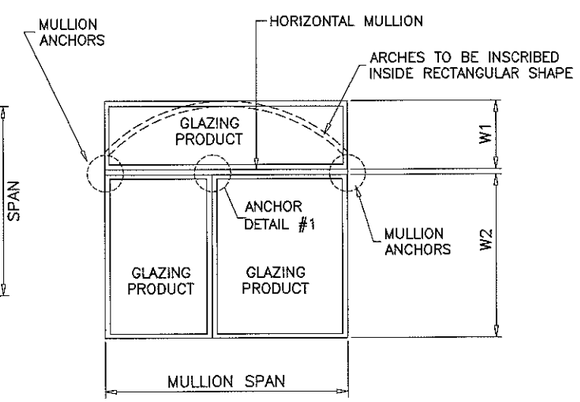

NOTE:
ANY ANCHOR CONDITION SHOWN HEREIN MAY COVER LOCATIONS AT HEAD, SILL OR JAMB ENDS.
SEE SHEETS 4 & 5 FOR ANCHOR DETAILS.

(INTERPOLATION BETWEEN WIDTHS OR SPANS ALLOWED)

TYPICAL MULLION ARRANGEMENTS

$$\text{WIDTH (W)} = \frac{W1 + W2}{2}$$

THESE MULLIONS CAN ONLY BE USED WITH SIW GLAZING PRODUCTS

PRODUCT REVISED
as complying with the Florida Building Code
Acceptance No 17-0717.02
Expiration Date Nov 21, 2022
By Manuel Perez
Miami-Dade Product Control
JUL 06 2022

JAVAD AHMAD
LICENSE
No. 70592
STATE OF FLORIDA
PROFESSIONAL ENGINEER

AL-FAROOQ CORPORATION
ENGINEERS & PRODUCT DEVELOPMENT
9360 SUNSET DRIVE, SUITE 220
MIAMI, FLORIDA 33173 (C.A.N. 3538)
TEL. (305) 264-8100 FAX. (305) 262-6978

MULLION\M07–04SIW

ALUMINUM TUBE MULLIONS

SIW IMPACT WINDOWS, LLC.
975 S. CONGRESS AVE. #102
DELRAY BEACH, FL. 33445
TEL. (561) 274–9392 FAX. (561) 274–9262

revisions:

no	date	by	description
C	12.06.11		NO CHANGE THIS SHEET
D	05.30.15		UPDATED TO 2014 FBC
E	02.15.16		REV. PER RER COMMENTS
F	05.16.17		UPDATED TO 2017 FBC

date: 10–01–07
scale: 3/8" = 1"
dr. by: TARIQ
chk. by:

drawing no.
M07–04

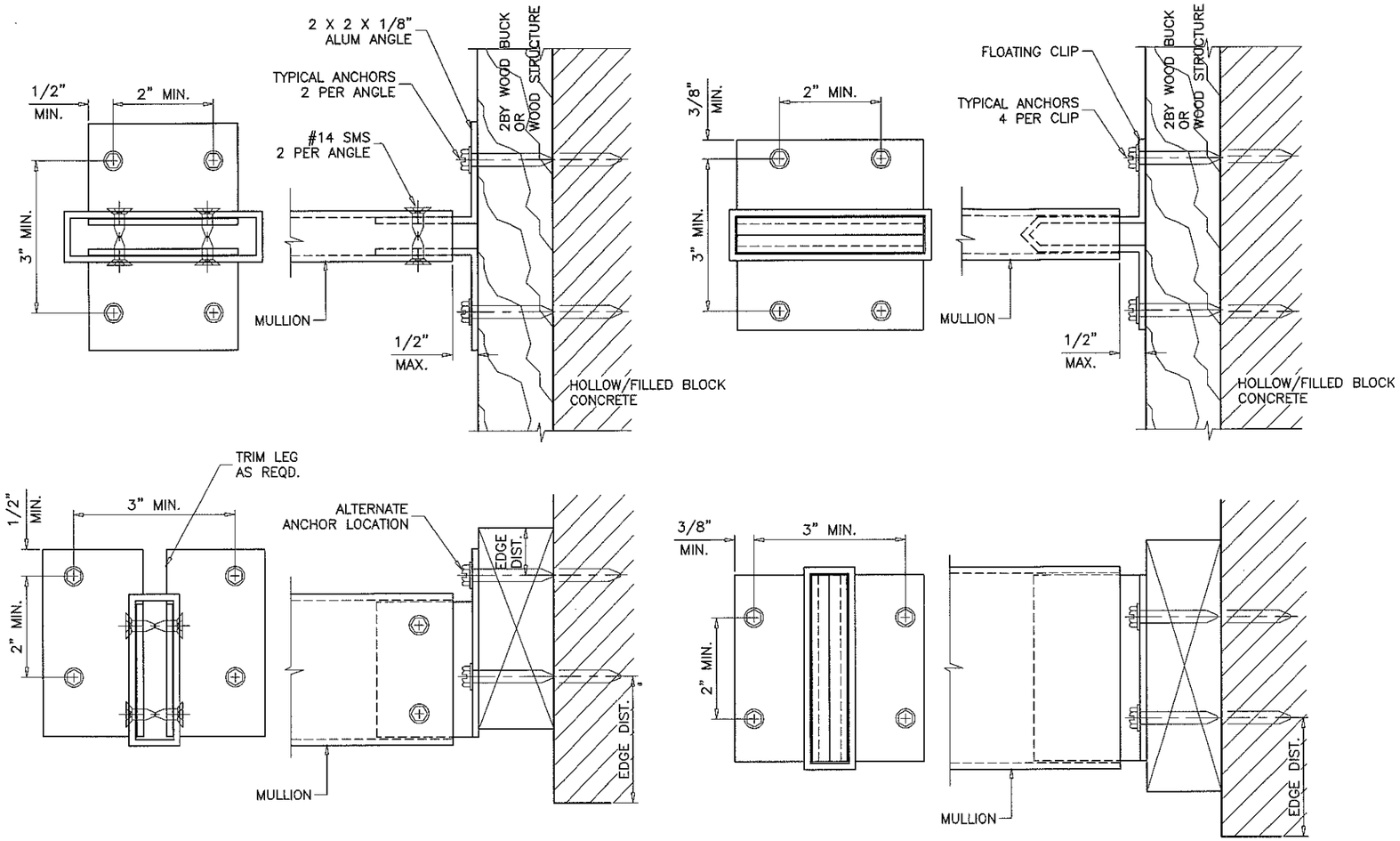

TYPICAL ANCHORS TYPE 'W4-2'

INTO 2BY WOOD BUCKS OR WOOD STRUCTURES
THRU 1BY BUCKS INTO CONC. OR MASONRY

SEE SHEET 10 FOR ANCHOR CAPACITIES

THESE MULLIONS CAN ONLY BE USED WITH SIW GLAZING PRODUCTS

JUL 03 2017

PRODUCT REVISED
as complying with the Florida
Building Code
Acceptance No 17-0717.02
Expiration Date Nov. 21, 2022
By Manuel Sera
Miami Dade Product Control

JAVAD AHMAD
LICENSE
No. 70592
STATE OF FLORIDA
PROFESSIONAL ENGINEER

AL-FAROOQ CORPORATION
ENGINEERS & PRODUCT DEVELOPMENT
9360 SUNSET DRIVE, SUITE 220
MIAMI, FLORIDA 33173 (C.A.N. 3538)
TEL. (305) 264-8100 FAX. (305) 262-6978

MULLION\M07-04SIW

ALUMINUM TUBE MULLIONS

SIW IMPACT WINDOWS, LLC.
975 S. CONGRESS AVE. #102
DELRAY BEACH, FL. 33445
TEL. (561) 274-9392 FAX. (561) 274-9262

revisions:

no	date	by	description
C	12.06.11		NO CHANGE THIS SHEET
D	05.30.15		UPDATED TO 2014 FBC
E	02.15.16		NO CHANGE THIS SHEET
F	05.16.17		UPDATED TO 2017 FBC

date: 10-01-07
scale: 3/8" = 1"
dr. by: TARIQ
chk. by:

drawing no.
M07-04

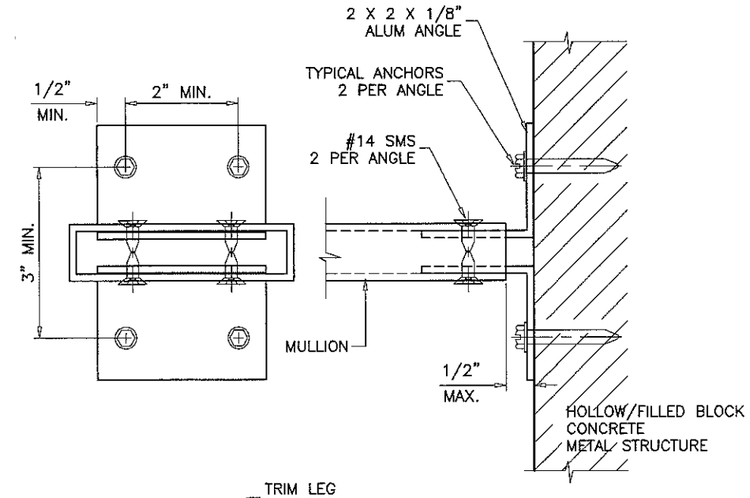

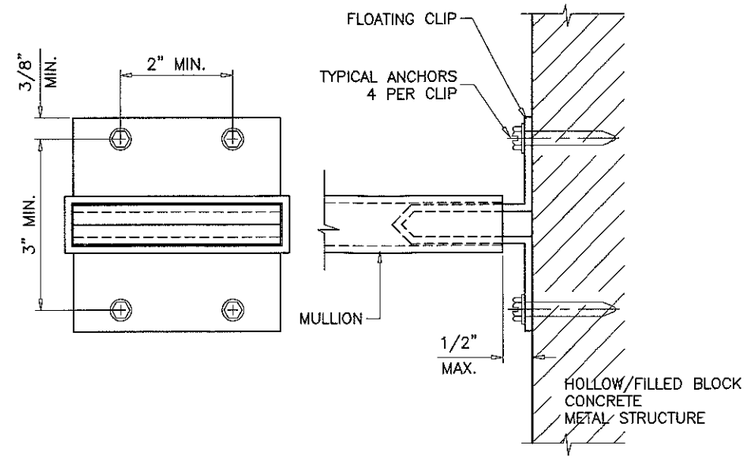

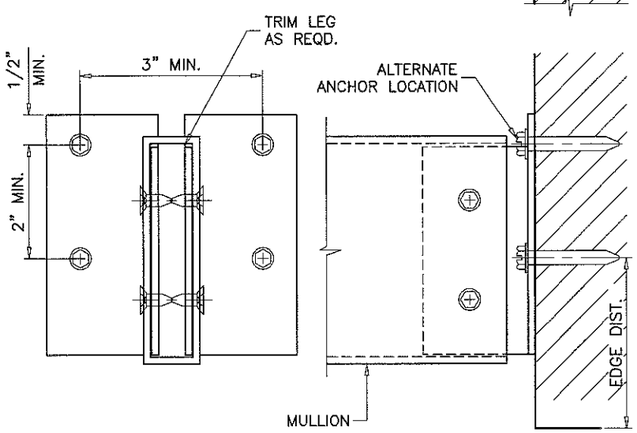

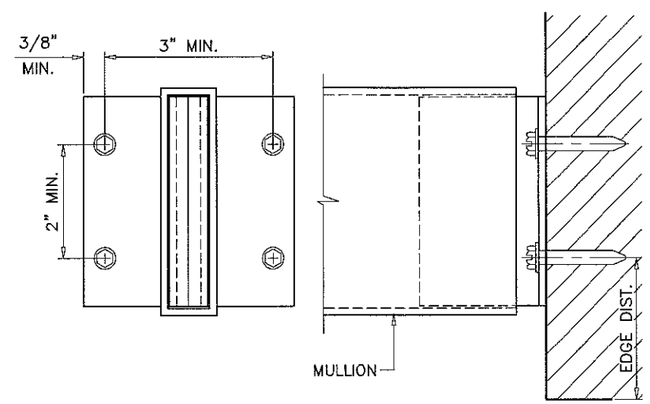

TYPICAL ANCHORS TYPE 'B4-2', 'C4-2', 'M4-2'

DIRECTLY INTO HOLLOW/FILLED BLOCK
DIRECTLY INTO CONCRETE
INTO METAL STRUCTURES

SEE SHEET 10 FOR ANCHOR CAPACITIES

THESE MULLIONS CAN ONLY BE USED WITH SIW GLAZING PRODUCTS

PRODUCT REVISED
as complying with the Florida
Building Code
Acceptance No 17-0717.02
Expiration Date Nov. 21, 2022
By Manuel Frias
Miami Dade Product Control

JUL 05 2017

JAVAD AHMAD
LICENSE
No. 70592
STATE OF FLORIDA
PROFESSIONAL ENGINEER

AL-FAROOQ CORPORATION
ENGINEERS & PRODUCT DEVELOPMENT
9360 SUNSET DRIVE, SUITE 220
MIAMI, FLORIDA 33173 (C.A.N. 3538)
TEL. (305) 264-8100 FAX. (305) 262-6978

MULLION\M07-04SIW

ALUMINUM TUBE MULLIONS

SIW IMPACT WINDOWS, LLC.
975 S. CONGRESS AVE. #102
DELRAY BEACH, FL. 33445
TEL. (561) 274-9392 FAX. (561) 274-9262

revisions:

no	date	by	description
C	12.06.11		NO CHANGE THIS SHEET
D	05.30.15		UPDATED TO 2014 FBC
E	02.15.16		NO CHANGE THIS SHEET
F	05.16.17		UPDATED TO 2017 FBC

date: 10-01-07
scale: 3/8" = 1"
dr. by: TARIQ
chk. by:

drawing no.
M07-04

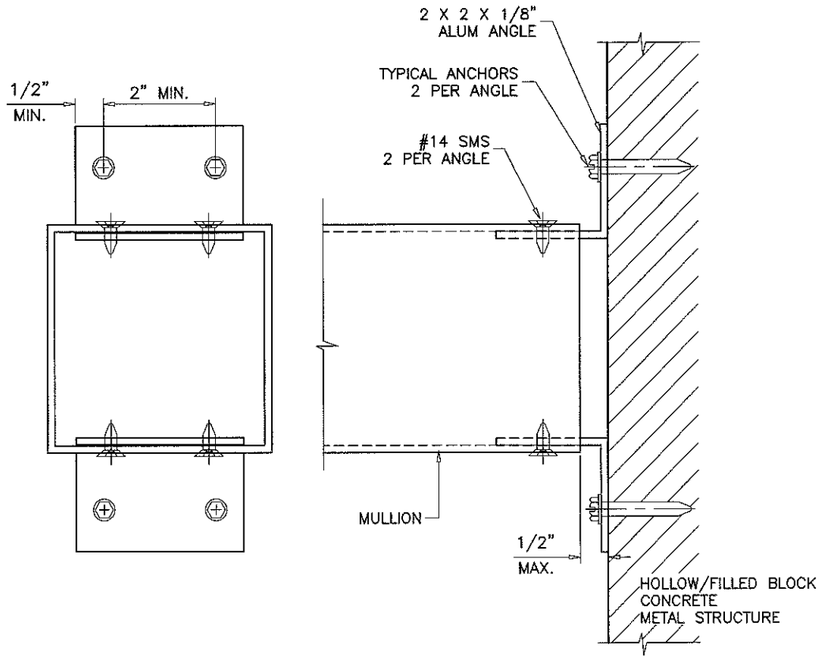

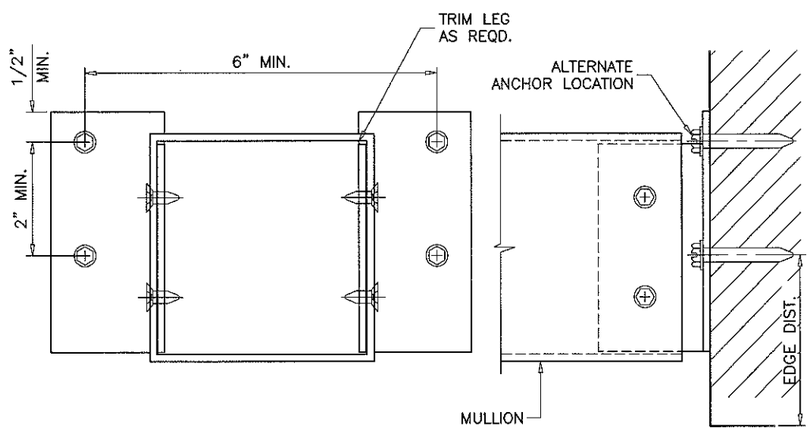

TYPICAL ANCHORS TYPE 'B4-2', 'C4-2', 'M4-2'

DIRECTLY INTO HOLLOW/FILLED BLOCK
DIRECTLY INTO CONCRETE
INTO METAL STRUCTURES

SEE SHEET 10 FOR ANCHOR CAPACITIES

THESE MULLIONS CAN ONLY BE USED WITH SIW GLAZING PRODUCTS

JUL 05 2017

PRODUCT REVISED
as complying with the Florida
Building Code
Acceptance No 17-0717.02
Expiration Date Nov. 21, 2022
By Manuel Perez
Miami Dade Product Control

JAVAD AHMAD
LICENSE
No. 70592
STATE OF FLORIDA
PROFESSIONAL ENGINEER

AL-FAROOQ CORPORATION
ENGINEERS & PRODUCT DEVELOPMENT
9360 SUNSET DRIVE, SUITE 220
MIAMI, FLORIDA 33173 (C.A.N. 3538)
TEL. (305) 264-8100 FAX. (305) 262-6978

MULLION\M07-04SIW

ALUMINUM TUBE MULLIONS

SIW IMPACT WINDOWS, LLC.
975 S. CONGRESS AVE. #102
DELRAY BEACH, FL. 33445
TEL. (561) 274-9392 FAX. (561) 274-9262

revisions:

no	date	by	description
C	12.06.11		NO CHANGE THIS SHEET
D	05.30.15		UPDATED TO 2014 FBC
E	02.15.16		NO CHANGE THIS SHEET
F	05.16.17		UPDATED TO 2017 FBC

date: 10-01-07
scale: 3/8" = 1"
dr. by: TARIQ
chk. by:

drawing no.
M07-04

DESIGN LOAD CAPACITY – PSF					
WINDOW DIMS.		ANCHORS TYPE			
WIDTH (W)	MULL SPAN	W4–2	B4–2	C4–2	M4–2
19–1/8"	38–3/8"	130.0	130.0	130.0	130.0
26–1/2"		130.0	130.0	130.0	130.0
30"		130.0	117.1	130.0	130.0
37"		130.0	94.9	130.0	130.0
42"		130.0	83.6	130.0	130.0
48"		130.0	73.2	130.0	130.0
54"		130.0	65.0	124.0	130.0
60"		129.1	58.5	111.6	130.0
66"		117.3	53.2	101.4	130.0
72"		107.6	48.8	93.0	130.0
19–1/8"	50–5/8"	130.0	130.0	130.0	130.0
26–1/2"		130.0	100.5	130.0	130.0
30"		130.0	88.7	130.0	130.0
37"		130.0	72.0	130.0	130.0
42"		130.0	63.4	120.8	130.0
48"		122.3	55.5	105.7	130.0
54"		108.7	49.3	94.0	130.0
60"		97.8	44.4	84.6	130.0
66"		89.0	40.3	76.9	130.0
72"		81.5	37.0	70.5	123.4
19–1/8"	63"	130.0	111.9	130.0	130.0
26–1/2"		130.0	80.7	130.0	130.0
30"		130.0	71.3	130.0	130.0
37"		127.5	57.8	110.2	130.0
42"		112.3	50.9	97.1	130.0
48"		98.3	44.6	85.0	130.0
54"		87.4	39.6	75.5	130.0
60"		78.6	35.7	68.0	119.0
66"		71.5	32.4	61.8	108.2
72"		65.5	29.7	56.6	99.2
19–1/8"	74–1/4"	130.0	94.9	130.0	130.0
26–1/2"		130.0	68.5	130.0	130.0
30"		130.0	60.5	115.3	130.0
37"		108.2	49.1	93.5	130.0
42"		95.3	43.2	82.4	130.0
48"		83.4	37.8	72.1	126.2
54"		74.1	33.6	64.1	112.2
60"		66.7	30.3	57.7	101.0
66"		60.7	27.5	52.4	91.8
72"		55.6	25.2	48.1	84.1

DESIGN LOAD CAPACITY – PSF					
WINDOW DIMS.		ANCHORS TYPE			
WIDTH (W)	MULL SPAN	W4–2	B4–2	C4–2	M4–2
19–1/8"	78"	130.0	90.4	130.0	130.0
26–1/2"		130.0	65.2	124.3	130.0
30"		127.0	57.6	109.8	130.0
37"		103.0	46.7	89.0	130.0
42"		90.7	41.1	78.4	130.0
48"		79.4	36.0	68.6	120.2
54"		70.6	32.0	61.0	106.8
60"		63.5	28.8	54.9	96.1
66"		57.7	26.2	49.9	87.4
72"		52.9	24.0	45.7	80.1
19–1/8"	84"	130.0	83.9	130.0	130.0
26–1/2"		130.0	60.5	115.4	130.0
30"		117.9	53.5	101.9	130.0
37"		95.6	43.4	82.7	130.0
42"		84.2	38.2	72.8	127.5
48"		73.7	33.4	63.7	111.6
54"		65.5	29.7	56.6	99.2
60"		59.0	26.7	51.0	89.3
66"		53.6	24.3	46.3	81.1
72"		49.1	22.3	42.5	74.4
19–1/8"	96"	130.0	73.4	130.0	130.0
26–1/2"		116.8	53.0	101.0	130.0
30"		103.2	46.8	89.2	130.0
37"		83.7	37.9	72.3	126.6
42"		73.7	33.4	63.7	111.6
48"		64.5	29.3	55.8	97.6
54"		57.3	26.0	49.6	86.8
60"		51.6	23.4	44.6	78.1
66"		46.9	21.3	40.5	71.0
72"		43.0	–	37.2	65.1
19–1/8"	108"	130.0	65.3	124.4	130.0
26–1/2"		103.8	47.1	89.8	130.0
30"		91.7	41.6	79.3	130.0
37"		74.4	33.7	64.3	112.6
42"		65.5	29.7	56.6	99.2
48"		57.3	26.0	49.6	86.8
54"		51.0	23.1	44.0	77.1
60"		45.9	20.8	39.6	69.4
66"		41.7	–	36.0	63.1
72"		38.2	–	33.0	57.9

DESIGN LOAD CAPACITY – PSF					
WINDOW DIMS.		ANCHORS TYPE			
WIDTH (W)	MULL SPAN	W4–2	B4–2	C4–2	M4–2
19–1/8"	120"	129.5	58.7	111.9	130.0
26–1/2"		93.5	42.4	80.8	130.0
30"		82.6	37.4	71.4	125.0
37"		66.9	30.4	57.9	101.3
42"		59.0	26.7	51.0	89.3
48"		51.6	23.4	44.6	78.1
54"		45.9	20.8	39.6	69.4
60"		41.3	–	35.7	62.5
66"		37.5	–	32.4	56.8
72"		34.4	–	29.7	52.1
19–1/8"	132"	117.7	53.4	101.8	130.0
26–1/2"		85.0	38.5	73.4	128.6
30"		75.1	34.0	64.9	113.6
37"		60.9	27.6	52.6	92.1
42"		53.6	24.3	46.3	81.1
48"		46.9	21.3	40.5	71.0
54"		41.7	–	36.0	63.1
60"		37.5	–	32.4	56.8
66"		34.1	–	29.5	51.6
72"		31.3	–	27.0	47.3
19–1/8"	144"	107.9	48.9	93.3	130.0
26–1/2"		77.9	35.3	67.3	117.9
30"		68.8	31.2	59.5	104.1
37"		55.8	25.3	48.2	84.4
42"		49.1	22.3	42.5	74.4
48"		43.0	–	37.2	65.1
54"		38.2	–	33.0	57.9
60"		34.4	–	29.7	52.1
66"		31.3	–	27.0	47.3

ALL LOADS ARE EXT.(+)/INT.(–).

TYPICAL ANCHORS:

1/4" DIA. ULTRACON BY 'ELCO' (Fu=177 KSI, Fy=155 KSI)

W4–2: INTO 2BY WOOD BUCKS OR WOOD STRUCTURES
1–1/2" MIN. PENETRATION INTO WOOD

W4–2: THRU 1BY BUCKS INTO CONC. OR MASONRY
1–1/4" MIN. EMBED INTO CONC. OR MASONRY

B4–2: DIRECTLY INTO HOLLOW/FILLED BLOCK
1–1/4" MIN. EMBED INTO BLOCK

C4–2: DIRECTLY INTO CONCRETE
1–1/2" MIN. EMBED INTO CONCRETE

1/4" DIA. TEKS OR SELF DRILLING SCREWS (GRADE 5 CRS)

M4–2: INTO METAL STRUCTURES
STEEL : 1/8" THK. MIN. (Fy = 36 KSI MIN.)
ALUMINUM : 1/8" THK. MIN. (6063–T5 MIN.)
(STEEL IN CONTACT WITH ALUMINUM TO BE PLATED OR PAINTED)

TYPICAL EDGE DISTANCE

INTO CONCRETE AND MASONRY = 2–1/2" MIN.
INTO WOOD STRUCTURE = 1" MIN.
INTO METAL STRUCTURE = 3/4" MIN.

ANCHORS CL TO CL DISTANCE = 2" MIN.

WOOD AT HEAD, SILL OR JAMBS SG = 0.55 MIN.
CONCRETE AT HEAD, SILL OR JAMBS f'c = 3000 PSI MIN.
C–90 HOLLOW/FILLED NORMAL WEIGHT BLOCK AT JAMBS f'm = 2000 PSI MIN.

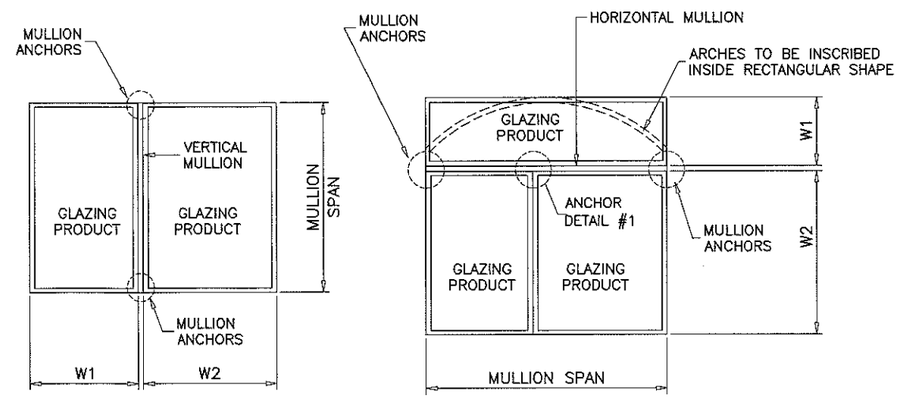

NOTE:
ANY ANCHOR CONDITION SHOWN HEREIN MAY COVER LOCATIONS AT HEAD, SILL OR JAMB ENDS.
SEE SHEETS 7 THRU 9 FOR ANCHOR DETAILS.

(INTERPOLATION BETWEEN WIDTHS OR SPANS ALLOWED)

TYPICAL MULLION ARRANGEMENTS

$$\text{WIDTH (W)} = \frac{W1 + W2}{2}$$

THESE MULLIONS CAN ONLY BE USED WITH SIW GLAZING PRODUCTS

JUL 3 5 2017

PRODUCT REVISED
as complying with the Florida Building Code
Acceptance No. 17-0717.02
Expiration Date Nov. 21, 2022
By Manuel Perez
Miami-Dade Product Control

JAVAD AHMAD
LICENSE
No. 70592
STATE OF FLORIDA
PROFESSIONAL ENGINEER

AL-FAROOQ CORPORATION
ENGINEERS & PRODUCT DEVELOPMENT
9360 SUNSET DRIVE, SUITE 220
MIAMI, FLORIDA 33173 (C.A.N. 3538)
TEL. (305) 264-8100 FAX. (305) 262-6978

MULLION\M07–04SIW

ALUMINUM TUBE MULLIONS

SIW IMPACT WINDOWS, LLC.
975 S. CONGRESS AVE. #102
DELRAY BEACH, FL. 33445
TEL. (561) 274-9392 FAX. (561) 274-9262

revisions:

no	date	by	description
C	12.06.11		NO CHANGE THIS SHEET
D	05.30.15		UPDATED TO 2014 FBC
E	02.15.16		REV. PER RER COMMENTS
F	05.16.17		UPDATED TO 2017 FBC

date: 10–01–07
scale: 3/8" = 1"
dr. by: TARIQ
chk. by:

drawing no.
M07–04

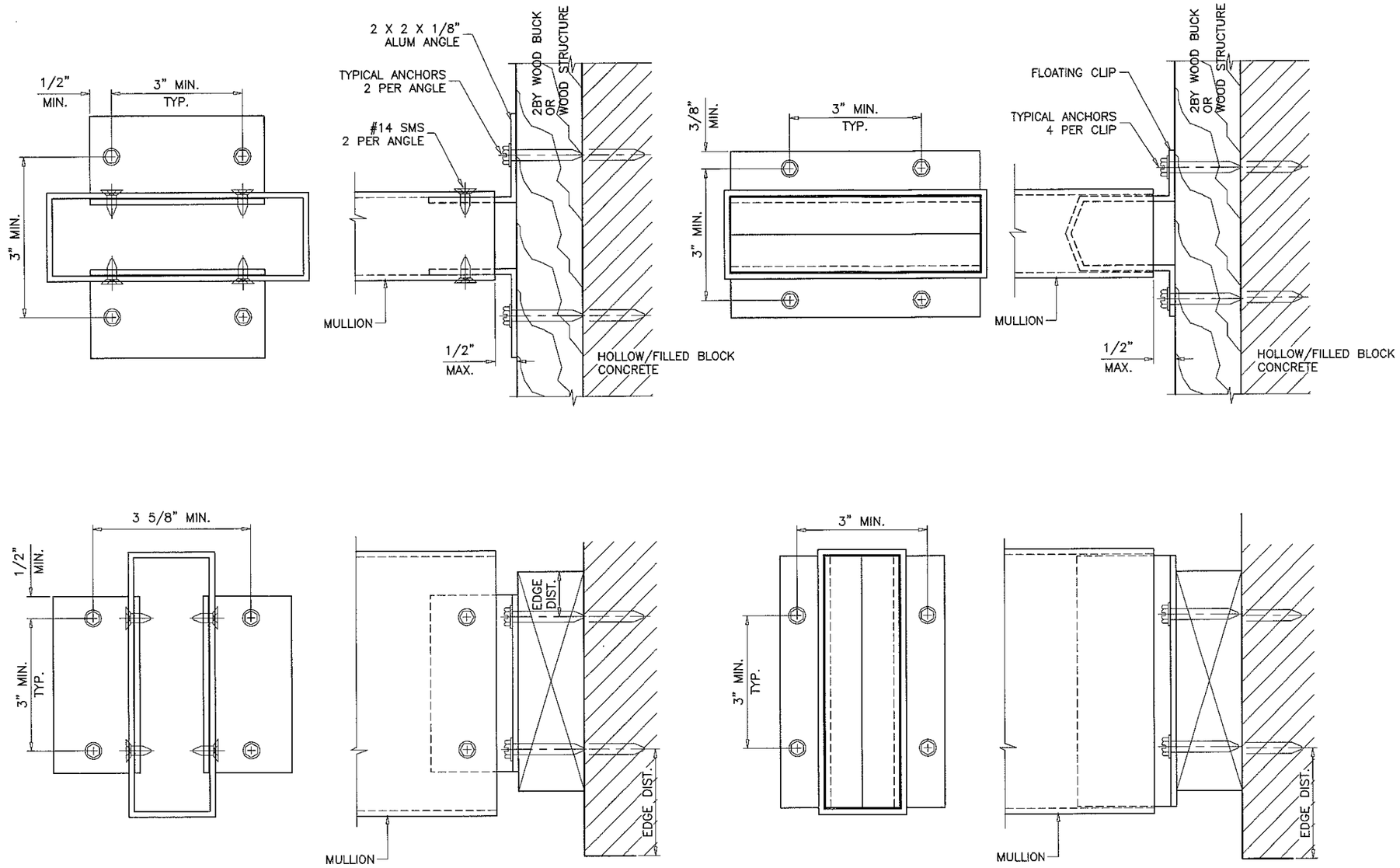

TYPICAL ANCHORS TYPE 'W4-3'

INTO 2BY WOOD BUCKS OR WOOD STRUCTURES
THRU 1BY BUCKS INTO CONC. OR MASONRY

SEE SHEET 14 FOR ANCHOR CAPACITIES

THESE MULLIONS CAN ONLY BE USED WITH SIW GLAZING PRODUCTS

PRODUCT REVISED
as complying with the Florida Building Code
Acceptance No 17-0717.02
Expiration Date Nov. 21, 2022
By Manuel Diaz
Miami Dade Product Control

JAVAD AHMAD
LICENSE
No. 70582
STATE OF FLORIDA
PROFESSIONAL ENGINEER

AL-FAROOQ CORPORATION
ENGINEERS & PRODUCT DEVELOPMENT
9360 SUNSET DRIVE, SUITE 220
MIAMI, FLORIDA 33173 (C.A.N. 3538)
TEL. (305) 264-8100 FAX. (305) 262-6978

MULLION\M07-04SIW

ALUMINUM TUBE MULLIONS

SIW IMPACT WINDOWS, LLC.
975 S. CONGRESS AVE. #102
DELRAY BEACH, FL. 33445
TEL. (561) 274-9392 FAX. (561) 274-9262

revisions:

no	date	by	description
C	12.06.11		NO CHANGE THIS SHEET
D	05.30.15		UPDATED TO 2014 FBC
E	02.15.16		NO CHANGE THIS SHEET
F	05.16.17		UPDATED TO 2017 FBC

date: 10-01-07
scale: 3/8" = 1"
dr. by: TARIQ
chk. by:

drawing no.
M07-04

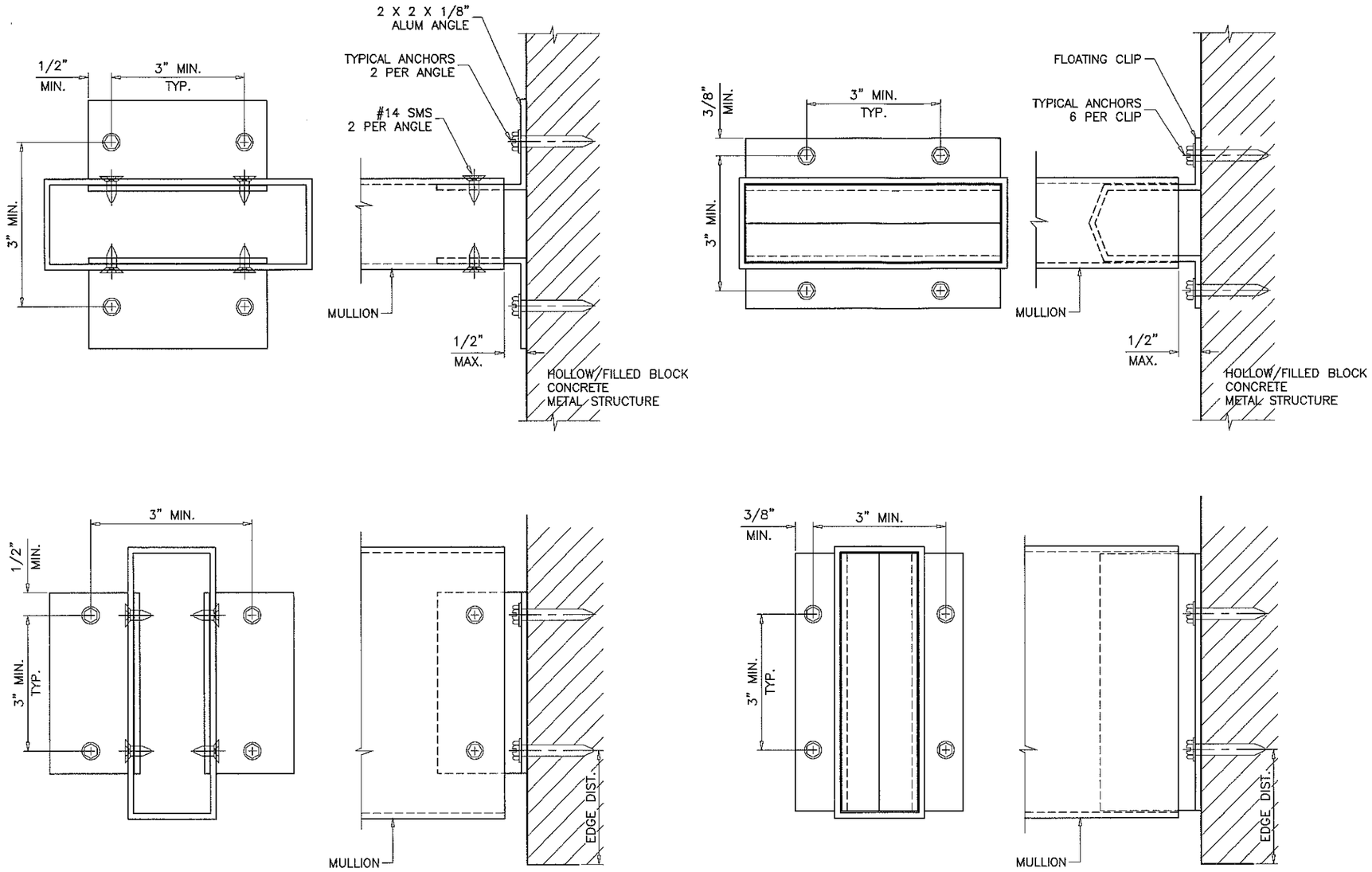

TYPICAL ANCHORS TYPE 'B4-3', 'C4-3'

DIRECTLY INTO HOLLOW/FILLED BLOCK
DIRECTLY INTO CONCRETE

SEE SHEET 14 FOR ANCHOR CAPACITIES

THESE MULLIONS CAN ONLY BE USED WITH SIW GLAZING PRODUCTS

JUL 03 2017

PRODUCT REVISED
as complying with the Florida
Building Code
Acceptance No 17-0717.02
Expiration Date Nov. 21, 2022
By Manuel Perez
Miami-Dade Product Control

JAVAD AHMAD
LICENSE
No. 70592
STATE OF FLORIDA
PROFESSIONAL ENGINEER

AL-FAROOQ CORPORATION
ENGINEERS & PRODUCT DEVELOPMENT
9360 SUNSET DRIVE, SUITE 220
MIAMI, FLORIDA 33173 (C.A.N. 3538)
TEL. (305) 264-8100 FAX. (305) 262-6978

MULLION\M07-04SIW

ALUMINUM TUBE MULLIONS

SIW IMPACT WINDOWS, LLC.
975 S. CONGRESS AVE. #102
DELRAY BEACH, FL. 33445
TEL. (561) 274-9392 FAX. (561) 274-9262

revisions:

no	date	by	description
C	12.06.11		NO CHANGE THIS SHEET
D	05.30.15		UPDATED TO 2014 FBC
E	02.15.16		NO CHANGE THIS SHEET
F	05.16.17		UPDATED TO 2017 FBC

date: 10-01-07
scale: 3/8" = 1"
dr. by: TARIQ
chk. by:

drawing no.
M07-04

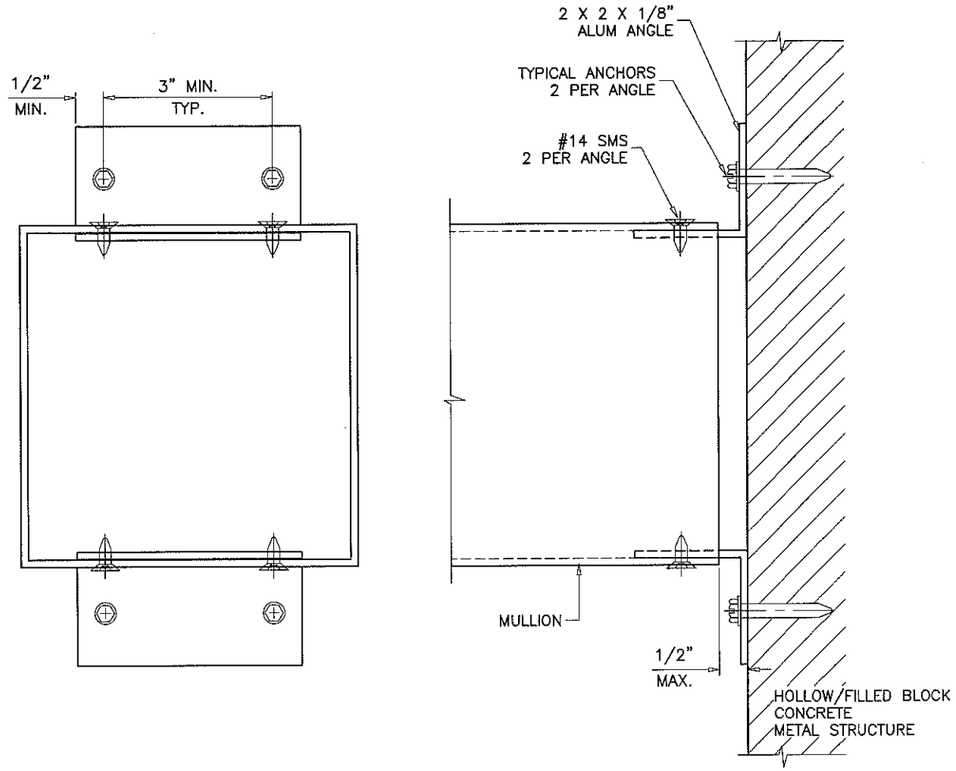

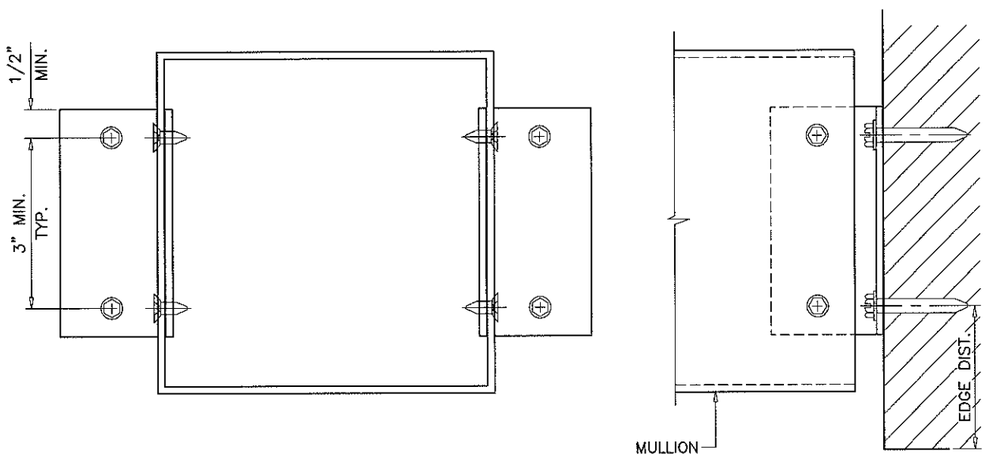

TYPICAL ANCHORS TYPE 'B4-3', 'C4-3'

DIRECTLY INTO HOLLOW/FILLED BLOCK
DIRECTLY INTO CONCRETE

SEE SHEET 14 FOR ANCHOR CAPACITIES

THESE MULLIONS CAN ONLY BE USED WITH SIW GLAZING PRODUCTS

JUL 05 2017

PRODUCT REVISED
as complying with the Florida
Building Code
Acceptance No 17-0717.02
Expiration Date Nov. 21, 2022
By Manuel Perez
Miami Dade Product Control

JAVAD AHMAD
LICENSE
No. 70592
STATE OF FLORIDA
PROFESSIONAL ENGINEER

AL-FAROOQ CORPORATION
ENGINEERS & PRODUCT DEVELOPMENT
9360 SUNSET DRIVE, SUITE 220
MIAMI, FLORIDA 33173 (C.A.N. 3538)
TEL. (305) 264-8100 FAX. (305) 262-6978

MULLION\M07-04SIW

ALUMINUM TUBE MULLIONS

SIW IMPACT WINDOWS, LLC.
975 S. CONGRESS AVE. #102
DELRAY BEACH, FL. 33445
TEL. (561) 274-9392 FAX. (561) 274-9262

revisions:

no	date	by	description
C	12.06.11		NO CHANGE THIS SHEET
D	05.30.15		UPDATED TO 2014 FBC
E	02.15.16		NO CHANGE THIS SHEET
F	05.16.17		UPDATED TO 2017 FBC

date: 10-01-07
scale: 3/8" = 1"
dr. by: TARIQ
chk. by:

drawing no.
M07-04

DESIGN LOAD CAPACITY – PSF				
WINDOW DIMS.		ANCHORS TYPE		
WIDTH (W)	MULL SPAN	W4–3	B4–3	C4–3
19–1/8"	38–3/8"	130.0	130.0	130.0
26–1/2"		130.0	130.0	130.0
30"		130.0	130.0	130.0
37"		130.0	121.7	130.0
42"		130.0	107.2	130.0
48"		130.0	93.8	130.0
54"		130.0	83.4	130.0
60"		129.1	75.0	130.0
66"		117.3	68.2	130.0
72"		107.6	62.5	130.0
19–1/8"	50–5/8"	130.0	130.0	130.0
26–1/2"		130.0	128.8	130.0
30"		130.0	113.8	130.0
37"		130.0	92.3	130.0
42"		130.0	81.3	130.0
48"		122.3	71.1	130.0
54"		108.7	63.2	130.0
60"		97.8	56.9	126.7
66"		89.0	51.7	115.2
72"		81.5	47.4	105.6
19–1/8"	63"	130.0	130.0	130.0
26–1/2"		130.0	103.5	130.0
30"		130.0	91.4	130.0
37"		127.5	74.1	130.0
42"		112.3	65.3	130.0
48"		98.3	57.1	127.2
54"		87.4	50.8	113.1
60"		78.6	45.7	101.8
66"		71.5	41.6	92.5
72"		65.5	38.1	84.8
19–1/8"	74–1/4"	130.0	121.7	130.0
26–1/2"		130.0	87.8	130.0
30"		130.0	77.6	130.0
37"		108.2	62.9	130.0
42"		95.3	55.4	123.4
48"		83.4	48.5	108.0
54"		74.1	43.1	96.0
60"		66.7	38.8	86.4
66"		60.7	35.3	78.5
72"		55.6	32.3	72.0

DESIGN LOAD CAPACITY – PSF				
WINDOW DIMS.		ANCHORS TYPE		
WIDTH (W)	MULL SPAN	W4–3	B4–3	C4–3
19–1/8"	78"	130.0	115.8	130.0
26–1/2"		130.0	83.6	130.0
30"		127.0	73.8	130.0
37"		103.0	59.9	130.0
42"		90.7	52.7	117.5
48"		79.4	46.2	102.8
54"		70.6	41.0	91.4
60"		63.5	36.9	82.2
66"		57.7	33.6	74.7
72"		52.9	30.8	68.5
19–1/8"	84"	130.0	107.6	130.0
26–1/2"		130.0	77.6	130.0
30"		117.9	68.6	130.0
37"		95.6	55.6	123.8
42"		84.2	49.0	109.1
48"		73.7	42.9	95.4
54"		65.5	38.1	84.8
60"		59.0	34.3	76.3
66"		53.6	31.2	69.4
72"		49.1	28.6	63.6
19–1/8"	96"	130.0	94.1	130.0
26–1/2"		116.8	67.9	130.0
30"		103.2	60.0	130.0
37"		83.7	48.6	108.3
42"		73.7	42.9	95.4
48"		64.5	37.5	83.5
54"		57.3	33.3	74.2
60"		51.6	30.0	66.8
66"		46.9	27.3	60.7
72"		43.0	25.0	55.7
19–1/8"	108"	130.0	83.7	130.0
26–1/2"		103.8	60.4	130.0
30"		91.7	53.3	118.8
37"		74.4	43.2	96.3
42"		65.5	38.1	84.8
48"		57.3	33.3	74.2
54"		51.0	29.6	66.0
60"		45.9	26.7	59.4
66"		41.7	24.2	54.0
72"		38.2	22.2	49.5

DESIGN LOAD CAPACITY – PSF				
WINDOW DIMS.		ANCHORS TYPE		
WIDTH (W)	MULL SPAN	W4–3	B4–3	C4–3
19–1/8"	120"	129.5	75.3	130.0
26–1/2"		93.5	54.3	121.0
30"		82.6	48.0	106.9
37"		66.9	38.9	86.7
42"		59.0	34.3	76.3
48"		51.6	30.0	66.8
54"		45.9	26.7	59.4
60"		41.3	24.0	53.4
66"		37.5	21.8	48.6
72"		34.4	20.0	44.5
19–1/8"	132"	117.7	68.4	130.0
26–1/2"		85.0	49.4	110.0
30"		75.1	43.6	97.2
37"		60.9	35.4	78.8
42"		53.6	31.2	69.4
48"		46.9	27.3	60.7
54"		41.7	24.2	54.0
60"		37.5	21.8	48.6
66"		34.1	–	44.2
72"		31.3	–	40.5
19–1/8"	144"	107.9	62.7	130.0
26–1/2"		77.9	45.3	100.8
30"		68.8	40.0	89.1
37"		55.8	32.4	72.2
42"		49.1	28.6	63.6
48"		43.0	25.0	55.7
54"		38.2	22.2	49.5
60"		34.4	20.0	44.5
66"		31.3	–	40.5

ALL LOADS ARE EXT.(+)/INT.(–).

NOTE:
ANY ANCHOR CONDITION SHOWN HEREIN MAY COVER LOCATIONS AT HEAD, SILL OR JAMB ENDS.
SEE SHEETS 11 THRU 13 FOR ANCHOR DETAILS.

(INTERPOLATION BETWEEN WIDTHS OR SPANS ALLOWED)

TYPICAL ANCHORS:

1/4" DIA. ULTRACON BY 'ELCO' (Fu=177 KSI, Fy=155 KSI)

W4–3: INTO 2BY WOOD BUCKS OR WOOD STRUCTURES
1–1/2" MIN. PENETRATION INTO WOOD

W4–3: THRU 1BY BUCKS INTO CONC. OR MASONRY
1–1/4" MIN. EMBED INTO CONC. OR MASONRY

B4–3: DIRECTLY INTO HOLLOW/FILLED BLOCK
1–1/4" MIN. EMBED INTO BLOCK

C4–3: DIRECTLY INTO CONCRETE
1–1/2" MIN. EMBED INTO CONCRETE

TYPICAL EDGE DISTANCE

INTO CONCRETE AND MASONRY = 2–1/2" MIN.
INTO WOOD STRUCTURE = 1" MIN.

ANCHORS CL TO CL DISTANCE = 3" MIN.

WOOD AT HEAD, SILL OR JAMBS SG = 0.55 MIN.
CONCRETE AT HEAD, SILL OR JAMBS f'c = 3000 PSI MIN.
C–90 HOLLOW/FILLED NORMAL WEIGHT BLOCK AT JAMBS f'm = 2000 PSI MIN.

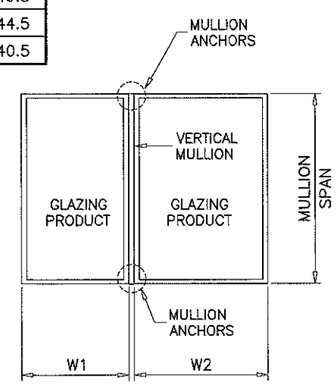

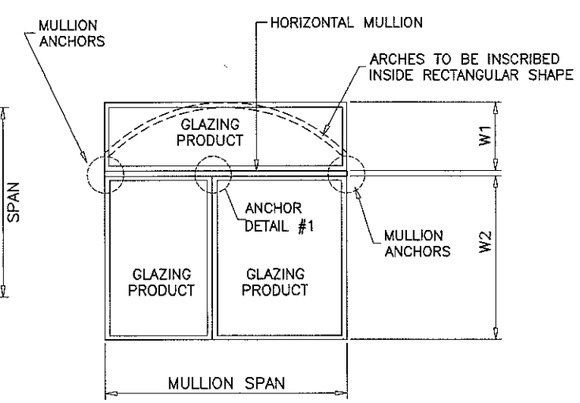

TYPICAL MULLION ARRANGEMENTS

$$\text{WIDTH (W)} = \frac{W1 + W2}{2}$$

THESE MULLIONS CAN ONLY BE USED WITH SIW GLAZING PRODUCTS

JUL 05 2017

PRODUCT REVISED
as complying with the Florida Building Code
Acceptance No 17-0717.02
Expiration Date Nov. 21, 2022
By Manuel Perez
Miami-Dade Product Control

JAVAD AHMAD
LICENSE
No. 70592
STATE OF FLORIDA
PROFESSIONAL ENGINEER

AL-FAROOQ CORPORATION
ENGINEERS & PRODUCT DEVELOPMENT
9360 SUNSET DRIVE, SUITE 220
MIAMI, FLORIDA 33173 (C.A.N. 3538)
TEL. (305) 264-8100 FAX. (305) 262-6978

MULLION\M07–04SIW

ALUMINUM TUBE MULLIONS

SIW IMPACT WINDOWS, LLC.
975 S. CONGRESS AVE. #102
DELRAY BEACH, FL. 33445
TEL. (561) 274–9392 FAX. (561) 274–9262

revisions:

no	date	by	description
C	12.06.11		NO CHANGE THIS SHEET
D	05.30.15		UPDATED TO 2014 FBC
E	02.15.16		REV. PER RER COMMENTS
F	05.16.17		UPDATED TO 2017 FBC

date: 10–01–07
scale: 3/8" = 1"
dr. by: TARIQ
chk. by:

drawing no.
M07–04

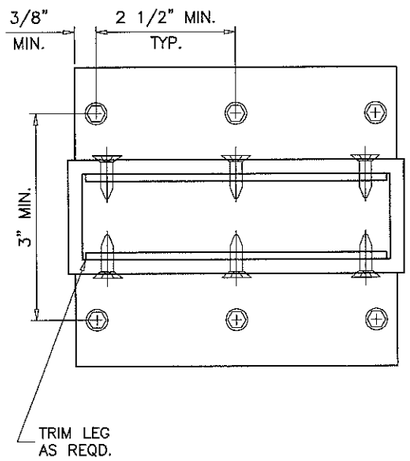

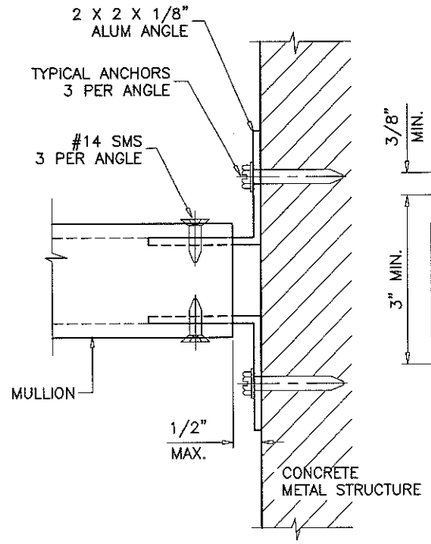

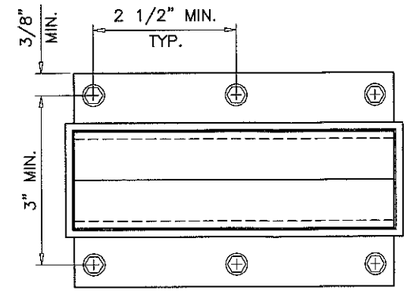

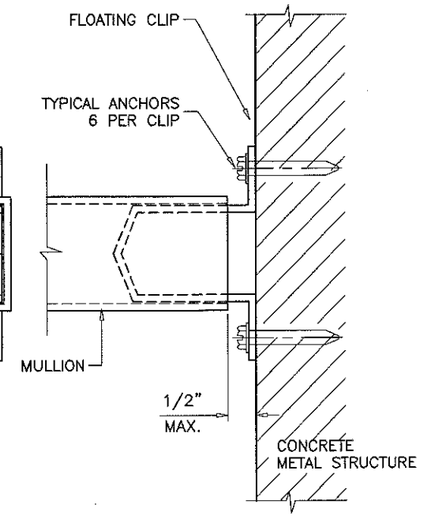

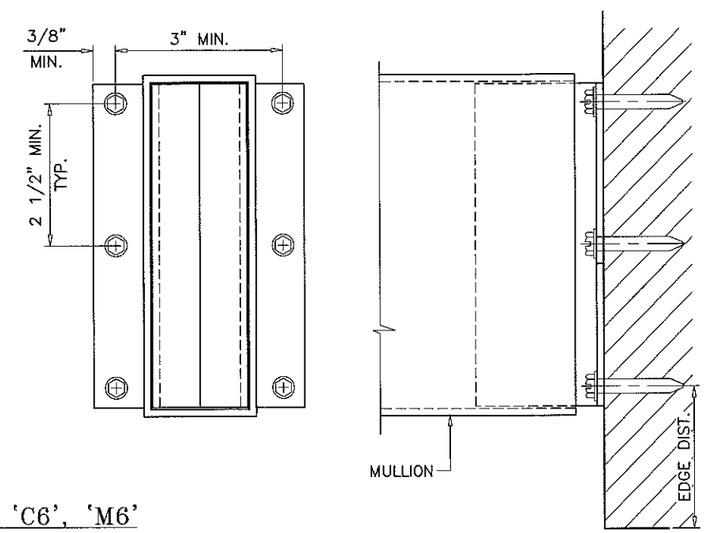

TYPICAL ANCHORS TYPE 'C6', 'M6'

DIRECTLY INTO CONCRETE
INTO METAL STRUCTURES

SEE SHEET 17 FOR ANCHOR CAPACITIES

THESE MULLIONS CAN ONLY BE USED WITH SIW GLAZING PRODUCTS

JUL 06 2017

PRODUCT REVISED
as complying with the Florida
Building Code
Acceptance No 17-0717.02
Expiration Date Nov. 21, 2022
By Manuel Lerz
Miami-Dade Product Control

JAVAD AHMAD
LICENSE
No. 70592
STATE OF FLORIDA
PROFESSIONAL ENGINEER

AL-FAROOQ CORPORATION
ENGINEERS & PRODUCT DEVELOPMENT
9360 SUNSET DRIVE, SUITE 220
MIAMI, FLORIDA 33173 (C.A.N. 3538)
TEL. (305) 264-8100 FAX. (305) 262-6978

MULLION\M07-04SIW

ALUMINUM TUBE MULLIONS

SIW IMPACT WINDOWS, LLC.
975 S. CONGRESS AVE. #102
DELRAY BEACH, FL. 33445
TEL. (561) 274-9392 FAX. (561) 274-9262

revisions:

no	date	by	description
C	12.06.11		NO CHANGE THIS SHEET
D	05.30.15		UPDATED TO 2014 FBC
E	02.15.16		NO CHANGE THIS SHEET
F	05.16.17		UPDATED TO 2017 FBC

date: 10-01-07
scale: 3/8" = 1"
dr. by: TARIQ
chk. by:

drawing no.
M07-04

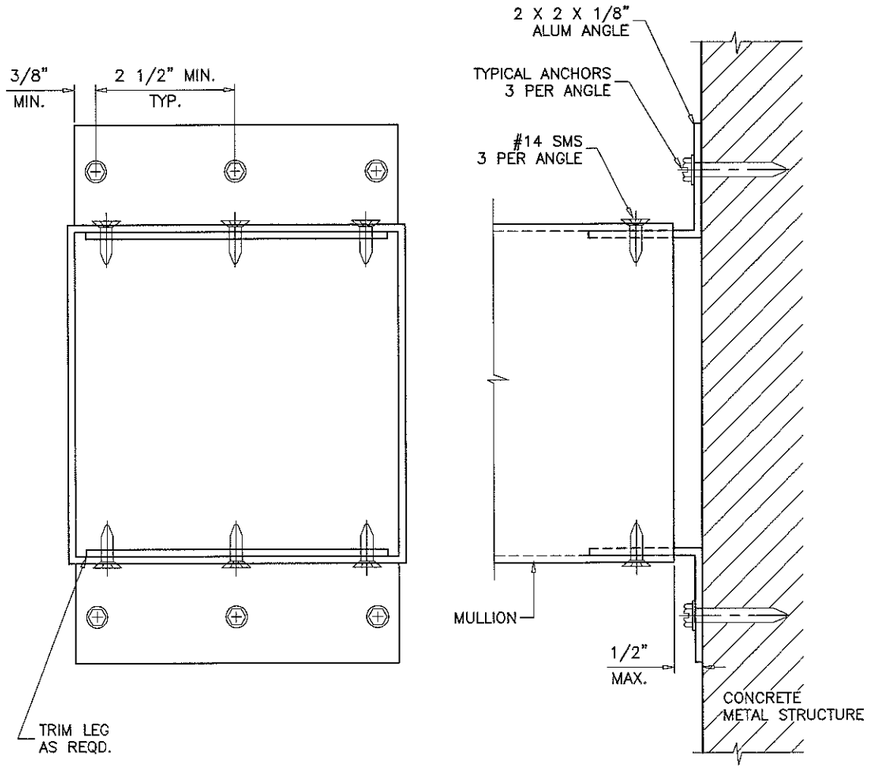

TYPICAL ANCHORS TYPE 'C6', 'M6'

DIRECTLY INTO CONCRETE
INTO METAL STRUCTURES

SEE SHEET 17 FOR ANCHOR CAPACITIES

THESE MULLIONS CAN ONLY BE USED WITH SIW GLAZING PRODUCTS

PRODUCT REVISED
as complying with the Florida
Building Code
Acceptance No 17-0717.02
Expiration Date Nov. 21, 2022
By Manuel Perez
Miami-Dade Product Control

JAVAD AHMAD
LICENSE
No. 70592
STATE OF FLORIDA
PROFESSIONAL ENGINEER

AL-FAROOQ CORPORATION
ENGINEERS & PRODUCT DEVELOPMENT
9360 SUNSET DRIVE, SUITE 220
MIAMI, FLORIDA 33173 (C.A.N. 3538)
TEL. (305) 264-8100 FAX. (305) 262-6978

MULLION\M07-04SIW

ALUMINUM TUBE MULLIONS

SIW IMPACT WINDOWS, LLC.
975 S. CONGRESS AVE. #102
DELRAY BEACH, FL. 33445
TEL. (561) 274-9392 FAX. (561) 274-9262

revisions:

no	date	by	description
C	12.06.11		NO CHANGE THIS SHEET
D	05.30.15		UPDATED TO 2014 FBC
E	02.15.16		NO CHANGE THIS SHEET
F	05.16.17		UPDATED TO 2017 FBC

date: 10-01-07
scale: 3/8" = 1"
dr. by: TARIQ
chk. by:

drawing no.
M07-04

DESIGN LOAD CAPACITY – PSF			
WINDOW DIMS.		ANCHORS TYPE	
WIDTH (W)	MULL SPAN	C6	M6
19–1/8"	38–3/8"	130.0	130.0
26–1/2"		130.0	130.0
30"		130.0	130.0
37"		130.0	130.0
42"		130.0	130.0
48"		130.0	130.0
54"		130.0	130.0
60"		130.0	130.0
66"		130.0	130.0
72"		130.0	130.0
19–1/8"	50–5/8"	130.0	130.0
26–1/2"		130.0	130.0
30"		130.0	130.0
37"		130.0	130.0
42"		130.0	130.0
48"		130.0	130.0
54"		130.0	130.0
60"		130.0	130.0
66"		130.0	130.0
72"		130.0	130.0
19–1/8"	63"	130.0	130.0
26–1/2"		130.0	130.0
30"		130.0	130.0
37"		130.0	130.0
42"		130.0	130.0
48"		130.0	130.0
54"		130.0	130.0
60"		127.5	130.0
66"		115.9	130.0
72"		106.3	130.0
19–1/8"	74–1/4"	130.0	130.0
26–1/2"		130.0	130.0
30"		130.0	130.0
37"		130.0	130.0
42"		130.0	130.0
48"		130.0	130.0
54"		120.2	130.0
60"		108.2	130.0
66"		98.4	130.0
72"		90.2	126.2

DESIGN LOAD CAPACITY – PSF			
WINDOW DIMS.		ANCHORS TYPE	
WIDTH (W)	MULL SPAN	C6	M6
19–1/8"	78"	130.0	130.0
26–1/2"		130.0	130.0
30"		130.0	130.0
37"		130.0	130.0
42"		130.0	130.0
48"		128.8	130.0
54"		114.5	130.0
60"		103.0	130.0
66"		93.7	130.0
72"		85.8	120.2
19–1/8"	84"	130.0	130.0
26–1/2"		130.0	130.0
30"		130.0	130.0
37"		130.0	130.0
42"		130.0	130.0
48"		119.6	130.0
54"		106.3	130.0
60"		95.7	130.0
66"		87.0	121.7
72"		79.7	111.6
19–1/8"	96"	130.0	130.0
26–1/2"		130.0	130.0
30"		130.0	130.0
37"		130.0	130.0
42"		119.6	130.0
48"		104.6	130.0
54"		93.0	130.0
60"		83.7	117.2
66"		76.1	106.5
72"		69.8	97.6
19–1/8"	108"	130.0	130.0
26–1/2"		130.0	130.0
30"		130.0	130.0
37"		120.6	130.0
42"		106.3	130.0
48"		93.0	130.0
54"		82.7	115.7
60"		74.4	104.1
66"		67.6	94.7
72"		62.0	86.8

DESIGN LOAD CAPACITY – PSF			
WINDOW DIMS.		ANCHORS TYPE	
WIDTH (W)	MULL SPAN	C6	M6
19–1/8"	120"	130.0	130.0
26–1/2"		130.0	130.0
30"		130.0	130.0
37"		108.6	130.0
42"		95.7	130.0
48"		83.7	117.2
54"		74.4	104.1
60"		67.0	93.7
66"		60.9	85.2
72"		55.8	78.1
19–1/8"	132"	130.0	130.0
26–1/2"		130.0	130.0
30"		121.7	130.0
37"		98.7	130.0
42"		87.0	121.7
48"		76.1	106.5
54"		67.6	94.7
60"		60.9	85.2
66"		55.3	77.5
72"		50.7	71.0
19–1/8"	144"	130.0	130.0
26–1/2"		126.3	130.0
30"		111.6	130.0
37"		90.5	126.6
42"		79.7	111.6
48"		69.8	97.6
54"		62.0	86.8
60"		55.8	78.1
66"		50.7	71.0

ALL LOADS ARE EXT.(+)/INT.(–).

NOTE:
ANY ANCHOR CONDITION SHOWN HEREIN MAY COVER LOCATIONS AT HEAD, SILL OR JAMB ENDS.
SEE SHEETS 15 & 16 FOR ANCHOR DETAILS.

(INTERPOLATION BETWEEN WIDTHS OR SPANS ALLOWED)

TYPICAL ANCHORS:

1/4" DIA. ULTRACON BY 'ELCO' (Fu=177 KSI, Fy=155 KSI)

C6: DIRECTLY INTO CONCRETE
1–1/2" MIN. EMBED INTO CONCRETE

1/4" DIA. TEKS OR SELF DRILLING SCREWS (GRADE 5 CRS)

M6: INTO METAL STRUCTURES
STEEL : 1/8" THK. MIN. (Fy = 36 KSI MIN.)
ALUMINUM : 1/8" THK. MIN. (6063–T5 MIN.)
(STEEL IN CONTACT WITH ALUMINUM TO BE PLATED OR PAINTED)

TYPICAL EDGE DISTANCE

INTO CONCRETE = 2–1/2" MIN.
INTO METAL STRUCTURE = 3/4" MIN.

ANCHORS CL TO CL DISTANCE = 2–1/2" MIN.

CONCRETE AT HEAD, SILL OR JAMBS f'c = 3000 PSI MIN.

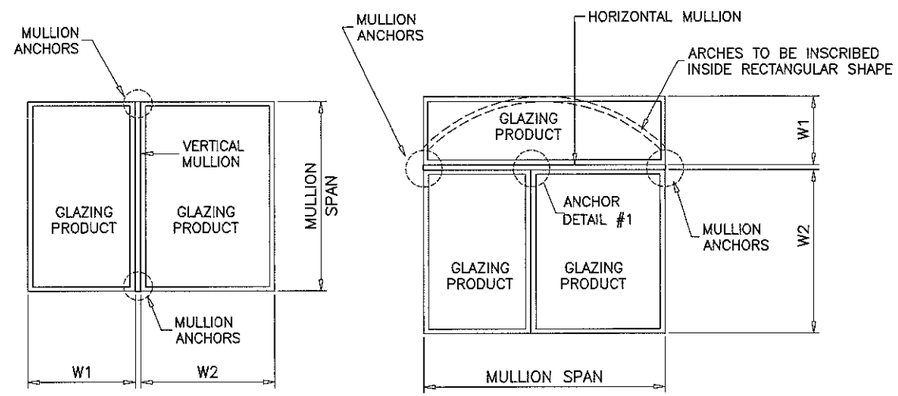

TYPICAL MULLION ARRANGEMENTS

$$\text{WIDTH (W)} = \frac{W1 + W2}{2}$$

THESE MULLIONS CAN ONLY BE USED WITH SIW GLAZING PRODUCTS

PRODUCT REVISED
as complying with the Florida
Building Code
Acceptance No 17-0717.02
Expiration Date Nov. 21, 2022
By Manuel Perez
Miami Dade Product Control
JUL 05 2017

JAVAD AHMAD
LICENSE
No. 70592
STATE OF FLORIDA
PROFESSIONAL ENGINEER

AL-FAROOQ CORPORATION
ENGINEERS & PRODUCT DEVELOPMENT
9360 SUNSET DRIVE, SUITE 220
MIAMI, FLORIDA 33173 (C.A.N. 3538)
TEL. (305) 264-8100 FAX. (305) 262-6978

MULLION\M07–04SIW

ALUMINUM TUBE MULLIONS

SIW IMPACT WINDOWS, LLC.
975 S. CONGRESS AVE. #102
DELRAY BEACH, FL. 33445
TEL. (561) 274-9392 FAX. (561) 274-9262

revisions:

no	date	by	description
C	12.06.11		NO CHANGE THIS SHEET
D	05.30.15		UPDATED TO 2014 FBC
E	02.15.16		NO CHANGE THIS SHEET
F	05.16.17		UPDATED TO 2017 FBC

date: 10–01–07
scale: 3/8" = 1"
dr. by: TARIQ
chk. by:

drawing no.
M07–04

DESIGN LOAD CAPACITY – PSF			
WINDOW DIMS.		ANCHORS TYPE	
WIDTH (W)	MULL SPAN	M2A	M3A
19–1/8"	38–3/8"	130.0	130.0
26–1/2"		130.0	130.0
30"		130.0	130.0
37"		130.0	130.0
42"		130.0	130.0
48"		122.1	130.0
54"		108.5	130.0
60"		97.7	130.0
66"		88.8	130.0
72"		81.4	122.1
19–1/8"	50–5/8"	130.0	130.0
26–1/2"		130.0	130.0
30"		130.0	130.0
37"		120.1	130.0
42"		105.8	130.0
48"		92.6	130.0
54"		82.3	123.4
60"		74.1	111.1
66"		67.3	101.0
72"		61.7	92.6
19–1/8"	63"	130.0	130.0
26–1/2"		130.0	130.0
30"		119.0	130.0
37"		96.5	130.0
42"		85.0	127.5
48"		74.4	111.6
54"		66.1	99.2
60"		59.5	89.3
66"		54.1	81.1
72"		49.6	74.4
19–1/8"	74–1/4"	130.0	130.0
26–1/2"		114.3	130.0
30"		101.0	130.0
37"		81.9	122.8
42"		72.1	108.2
48"		63.1	94.7
54"		56.1	84.1
60"		50.5	75.7
66"		45.9	68.8
72"		42.1	63.1

DESIGN LOAD CAPACITY – PSF			
WINDOW DIMS.		ANCHORS TYPE	
WIDTH (W)	MULL SPAN	M2A	M3A
19–1/8"	78"	130.0	130.0
26–1/2"		108.8	130.0
30"		96.1	130.0
37"		77.9	116.9
42"		68.7	103.0
48"		60.1	90.1
54"		53.4	80.1
60"		48.1	72.1
66"		43.7	65.5
72"		40.1	60.1
19–1/8"	84"	130.0	130.0
26–1/2"		101.0	130.0
30"		89.3	130.0
37"		72.4	108.6
42"		63.8	95.6
48"		55.8	83.7
54"		49.6	74.4
60"		44.6	66.9
66"		40.6	60.9
72"		37.2	55.8
19–1/8"	96"	122.5	130.0
26–1/2"		88.4	130.0
30"		78.1	117.2
37"		63.3	95.0
42"		55.8	83.7
48"		48.8	73.2
54"		43.4	65.1
60"		39.1	58.6
66"		35.5	53.3
72"		32.5	48.8
19–1/8"	108"	108.9	130.0
26–1/2"		78.6	117.9
30"		69.4	104.1
37"		56.3	84.4
42"		49.6	74.4
48"		43.4	65.1
54"		38.6	57.9
60"		34.7	52.1
66"		31.6	47.3
72"		28.9	43.4

DESIGN LOAD CAPACITY – PSF			
WINDOW DIMS.		ANCHORS TYPE	
WIDTH (W)	MULL SPAN	M2A	M3A
19–1/8"	120"	98.0	130.0
26–1/2"		70.7	106.1
30"		62.5	93.7
37"		50.7	76.0
42"		44.6	66.9
48"		39.1	58.6
54"		34.7	52.1
60"		31.2	46.9
66"		28.4	42.6
72"		26.0	39.1
19–1/8"	132"	89.1	130.0
26–1/2"		64.3	96.5
30"		56.8	85.2
37"		46.1	69.1
42"		40.6	60.9
48"		35.5	53.3
54"		31.6	47.3
60"		28.4	42.6
66"		25.8	38.7
72"		23.7	35.5
19–1/8"	144"	81.7	122.5
26–1/2"		58.9	88.4
30"		52.1	78.1
37"		42.2	63.3
42"		37.2	55.8
48"		32.5	48.8
54"		28.9	43.4
60"		26.0	39.1
66"		23.7	35.5

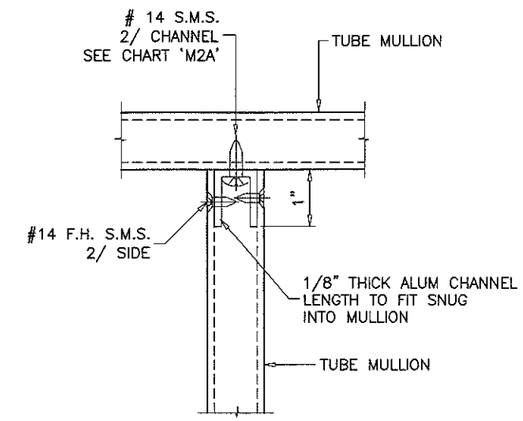

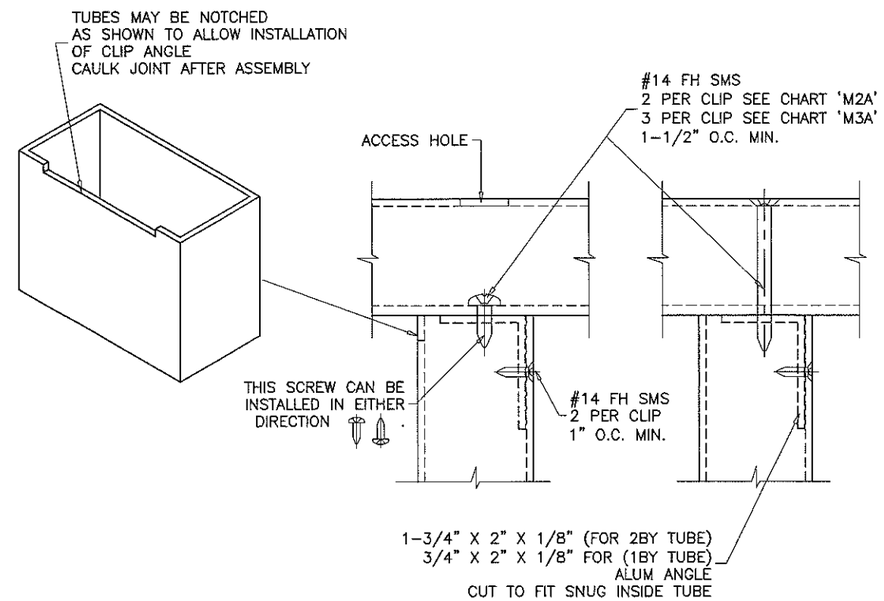

ANCHOR DETAIL #1

METAL TO METAL CONNECTION

PRODUCT REVISED JUL 06 2017
as complying with the Florida
Building Code
Acceptance No 17-0717.02
Expiration Date Nov. 21, 2022
By Manuel Perez
Miami Dade Product Control

JAVAD AHMAD
LICENSE
No. 70592
STATE OF FLORIDA
PROFESSIONAL ENGINEER

THESE MULLIONS CAN ONLY BE USED WITH
SIW GLAZING PRODUCTS

AL-FAROOQ CORPORATION
ENGINEERS & PRODUCT DEVELOPMENT
9360 SUNSET DRIVE, SUITE 220
MIAMI, FLORIDA 33173 (C.A.N. 3538)
TEL. (305) 264-8100 FAX. (305) 262-6978

MULLION\M07-04SIW

ALUMINUM TUBE MULLIONS

SIW IMPACT WINDOWS, LLC.
975 S. CONGRESS AVE. #102
DELRAY BEACH, FL. 33445
TEL. (561) 274-9392 FAX. (561) 274-9262

revisions:

no	date	by	description
C	12.06.11		NO CHANGE THIS SHEET
D	05.30.15		UPDATED TO 2014 FBC
E	02.15.16		NO CHANGE THIS SHEET
F	05.16.17		UPDATED TO 2017 FBC

date: 10–01–07
scale: 3/8" = 1"
dr. by: TARIQ
chk. by:

drawing no.
M07–04