MIAMI–DADE COUNTY
PRODUCT CONTROL SECTION
11805 SW 26 Street, Room 208
T (786) 315–2590 F (786) 315–2599
www.miamidade.gov/economy

DEPARTMENT OF REGULATORY AND ECONOMIC RESOURCES (RER)
BOARD AND CODE ADMINISTRATION DIVISION

NOTICE OF ACCEPTANCE (NOA)

ES Windows, LLC
10653 N.E. Quaybridge Ct.
Miami, FL 33138

SCOPE:

This NOA is being issued under the applicable rules and regulations governing the use of construction materials. The documentation submitted has been reviewed and accepted by Miami–Dade County RER–Product Control Section to be used in Miami–Dade County and other areas where allowed by the Authority Having Jurisdiction (AHJ).

This NOA shall not be valid after the expiration date stated below. The Miami–Dade County Product Control Section (In Miami–Dade County) and/ or the AHJ (in areas other than Miami–Dade County) reserve the right to have this product or material tested for quality assurance purposes. If this product or material fails to perform in the accepted manner, the manufacturer will incur the expense of such testing and the AHJ may immediately revoke, modify, or suspend the use of such product or material within their jurisdiction. RER reserves the right to revoke this acceptance, if it is determined by Miami–Dade County Product Control Section that this product or material fails to meet the requirements of the applicable building code.

This product is approved as described herein, and has been designed to comply with the Florida Building Code, including the High Velocity Hurricane Zone.

DESCRIPTION:

Series "ES–SW340" Thermal Broken Aluminum Horizontal Sliding Window – S.M.I.

APPROVAL DOCUMENT: Drawing No. **W16–22**, Series titled "ES–SW340 Thermal Aluminum Sliding Wdw. (S.M.I)", sheets 1 through 11 of 11, dated 04/07/16, with revision "**A**" dated 06/08/16, prepared by Al–Farooq Corporation, signed and sealed by Javad Ahmad, P. E., bearing the Miami–Dade County Product Control Approval stamp with the Notice of Acceptance number and Approval date by the Miami–Dade County Product Control Section.

MISSILE IMPACT RATING: Small Missile Impact Resistant

LABELING: Each unit shall bear a permanent label with the manufacturer's name or logo, **Barranquilla**, **Colombia**, **America Latina**, series, and following statement: "Miami–Dade County Product Control Approved", unless otherwise noted herein.

RENEWAL of this NOA shall be considered after a renewal application has been filed and there has been no change in the applicable building code negatively affecting the performance of this product.

TERMINATION of this NOA will occur after the expiration date or if there has been a revision or change in the materials, use, and/ or manufacture of the product or process. Misuse of this NOA as an endorsement of any product, for sales, advertising or any other purposes shall automatically terminate this NOA. Failure to comply with any section of this NOA shall be cause for termination and removal of NOA.

ADVERTISEMENT: The NOA number preceded by the words Miami–Dade County, Florida, and followed by the expiration date may be displayed in advertising literature. If any portion of the NOA is displayed, then it shall be done in its entirety.

INSPECTION: A copy of this entire NOA shall be provided to the user by the manufacturer or its distributors and shall be available for inspection at the job site at the request of the Building Official.

This NOA consists of this page 1 and evidence pages E–1 and E–2, as well as approval document mentioned above.

The submitted documentation was reviewed by **Jorge M. Plasencia, P. E.**

ES Windows, LLC

NOTICE OF ACCEPTANCE: EVIDENCE SUBMITTED

A. DRAWINGS

1. Manufacturer's die drawings and sections.

2. Drawing No. **W16–22**, Series titled "ES–SW340 Thermal Aluminum Sliding Wdw. (S.M.I)", sheets 1 through 11 of 11, dated 04/07/16, with revision "**A**" dated 06/08/16, prepared by Al–Farooq Corporation, signed and sealed by Javad Ahmad, P.E.

B. TESTS

1. Test reports on:
1) Air Infiltration Test, per FBC, TAS 202–94
2) Uniform Static Air Pressure Test, Loading per FBC TAS 202–94
3) Water Resistance Test, per FBC, TAS 202–94
4) Large Missile Impact Test per FBC, TAS 201–94
5) Small Missile Impact Test per FBC, TAS 201–94
6) Cyclic Wind Pressure Loading per FBC, TAS 203–94
7) Standard Test Method for Determination of Operating Force of Sliding Windows and Doors per ASTM E 2068–00 (2008)
8) Forced Entry Test, per ASTM F 588–04/ 07 and per FBC 2411 3.2.1, TAS 202–94

along with marked–up drawings and installation diagram of a horizontal sliding window, prepared by Fenestration Testing Laboratory, Inc., Test Report No. **FTL–7903**, dated 03/15/16, signed and sealed by Idalmis Ortega, P.E.

C. CALCULATIONS

1. Anchor verification calculations and structural analysis, conformance to and complying with **FBC 5th Edition (2014)**, prepared by Al–Farooq Corporation, dated 04/06/16, revised on 07/25/16, signed and sealed by Javad Ahmad, P.E.

2. Glazing complies with **ASTM E1300–09**

D. QUALITY ASSURANCE

1. Miami–Dade Department of Regulatory and Economic Resources (RER)

E. MATERIAL CERTIFICATIONS

1. Notice of Acceptance No. **14-0916.11** issued to **Kuraray America, Inc.** for their **"SentryGlas® (Clear and White) Glass Interlayers**" dated 06/25/15, expiring on 07/04/18.

2. Notice of Acceptance No. **14-0916.10** issued to **Kuraray America, Inc.** for their **"Butacite® PVB Glass Interlayer**" dated 04/25/15, expiring on 12/11/16**.**

NOTICE OF ACCEPTANCE: EVIDENCE SUBMITTED

F. STATEMENTS

1. Statement letter of conformance to, of complying with **FBC 5th Edition (2014)**, and of no financial interest, dated 04/01/16, signed and sealed by Javad Ahmad, P. E.

3. Distributor Agreement between ES Windows–Energia Solar, S.A., Barranquilla, Columbia, S.A. and ES Windows, LLC, Miami, Florida, dated 09/12/13, signed by Ms. Adriana Montoya, Manager and Andres Chamorro, General Manager respectively on behalf of the companies.

4. Laboratory compliance letter for Test Report No. **FTL–7903**, issued by Fenestration Testing Laboratory, Inc., dated 03/15/16, signed and sealed by Idalmis Ortega, P. E.

5. Proposal issued by Product Control, dated 02/10/14, signed by Jaime D. Gascon, P. E.

G. OTHERS

1. None.

NOA

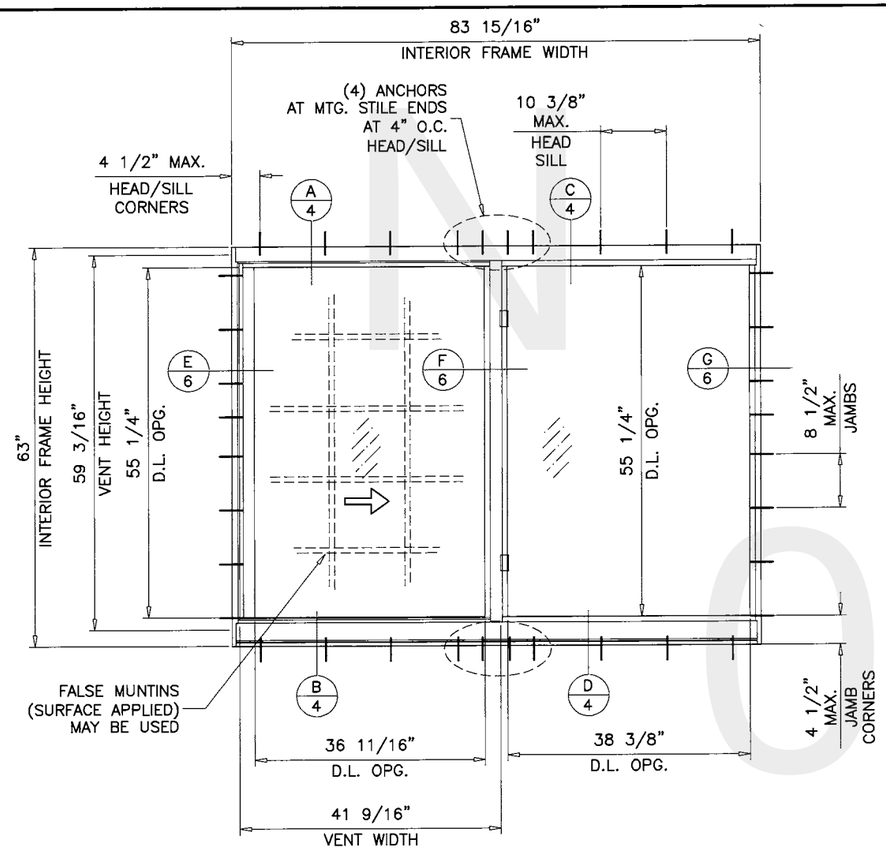

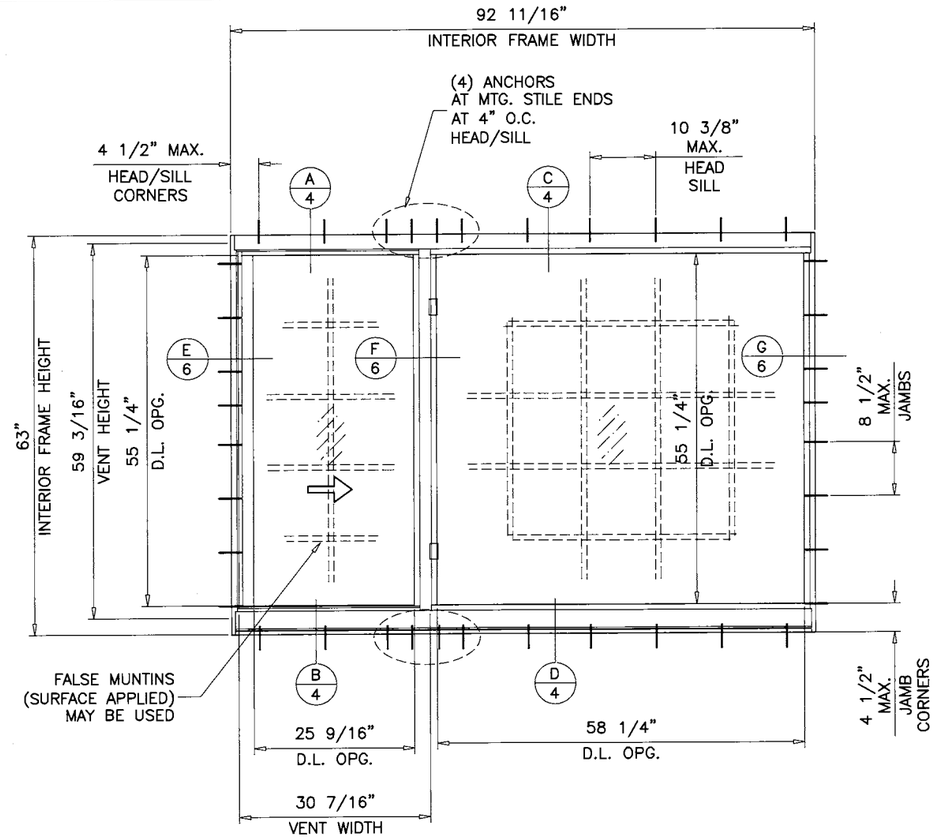

TYPICAL ELEVATIONS

THESE WINDOWS ARE RATED FOR SMALL MISSILE IMPACT.
MIAMI–DADE COUNTY APPROVED IMPACT RESISTANT SHUTTERS REQUIRED FOR INSTALLATIONS UP TO 30 FT. OF GRADE.
SHUTTERS NOT REQD. FOR INSTALLATIONS ABOVE 30 FT. OF GRADE.

ES–SW340 (S.M.I.)
THERMAL ALUMINUM HORIZONTAL SLIDING WINDOW

APPROVAL APPLIES TO SINGLE UNITS OR SIDE BY SIDE COMBINATIONS OF H.R./H.R. OR HORIZ. SLIDING WITH OTHER WINDOW TYPES IN MODULES OF TWO OR MORE WINDOWS USING MIAMI–DADE COUNTY APPROVED MULLIONS IN BETWEEN.
LOWER DESIGN PRESSURE FROM WINDOWS OR MULLION APPROVAL WILL APPLY TO ENTIRE SYSTEM.

THIS PRODUCT HAS BEEN DESIGNED AND TESTED TO COMPLY WITH THE REQUIREMENTS OF THE 2014 (5TH EDITION) FLORIDA BUILDING CODE INCLUDING HIGH VELOCITY HURRICANE ZONE (HVHZ).

WOOD BUCKS BY OTHERS, MUST BE ANCHORED PROPERLY TO TRANSFER LOADS TO THE STRUCTURE.

ANCHORS SHALL BE AS LISTED, SPACED AS SHOWN ON DETAILS, ANCHORS EMBEDMENT TO BASE MATERIAL SHALL BE BEYOND WALL DRESSING OR STUCCO.

ANCHORING OR LOADING CONDITIONS NOT SHOWN IN THESE DETAILS ARE NOT PART OF THIS APPROVAL.

A LOAD DURATION INCREASE IS USED IN DESIGN OF ANCHORS INTO WOOD ONLY.

ALL SHIMS TO BE HIGH IMPACT, NON–METALLIC AND NON–COMPRESSIBLE.

MATERIALS INCLUDING BUT NOT LIMITED TO STEEL/METAL SCREWS, THAT COME INTO CONTACT WITH OTHER DISSIMILAR MATERIALS SHALL MEET THE REQUIREMENTS OF THE 2014 FLORIDA BUILDING CODE & ADOPTED STANDARDS.

MAXIMUM DESIGN LOAD RATING = + 80.0 PSF
(FOR SIZES SHOWN OR SMALLER) – 110.0 PSF

ALTERNATE SIZES CAN NOT EXCEED VENT OR FIXED SIZES OF SHOWN ELEVATIONS.

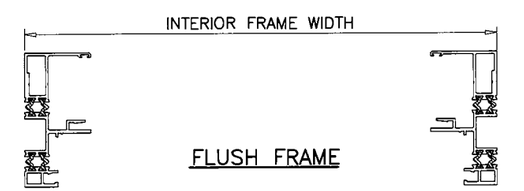

FLUSH FRAME

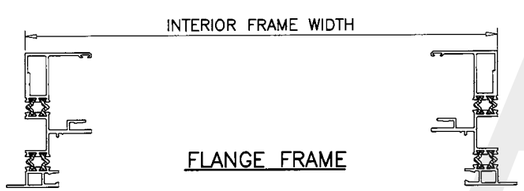

FLANGE FRAME

JUN 14 2016

JAVAD AHMAD
LICENSE
No. 70592
STATE OF FLORIDA
PROFESSIONAL ENGINEER

AL-FAROOQ CORPORATION
ENGINEERS & PRODUCT DEVELOPMENT
9360 SUNSET DRIVE, SUITE 220
MIAMI, FLORIDA 33173 (C.A.N. 3538)
TEL. (305) 264-8100 FAX. (305) 262-6978
COMP–ANL\W16–22ESW

ES–SW340 THERMAL ALUMINUM SLIDING WDW. (S.M.I.)

E.S. WINDOWS, LLC
3550 N.W. 49 STREET
MIAMI, FL. 33142
TEL. (305) 638–5151 FAX. (305) 638–5158

revisions:

no	date	by	description
A	06.08.16		NO CHANGE THIS SHEET

date: 04–07–16
scale: 1/2"=1'–0"
dr. by: TARIQ
chk. by:

drawing no.
W16–22

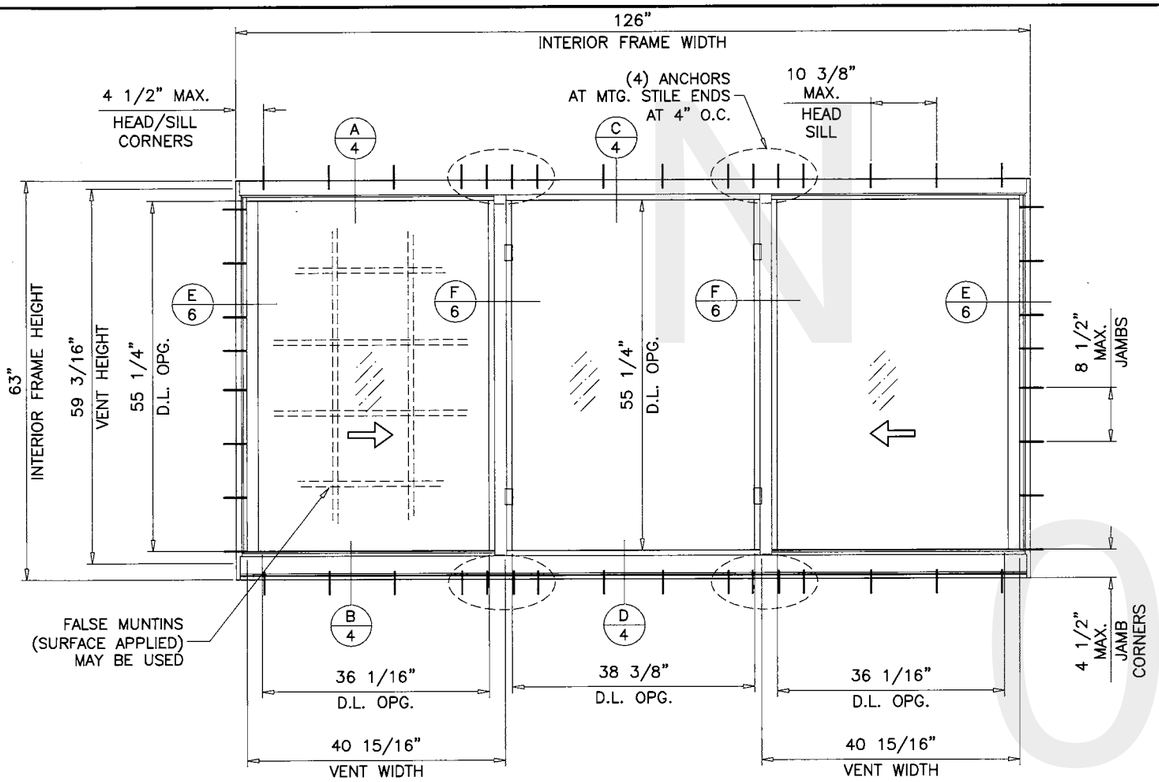

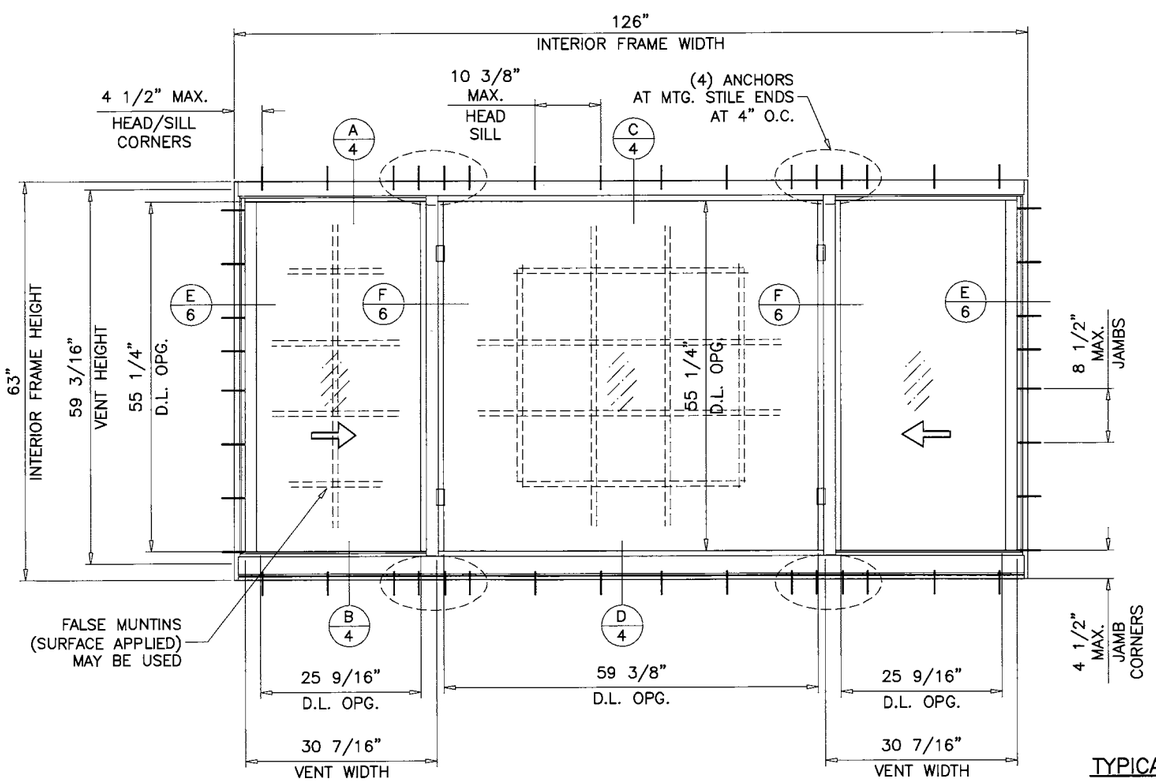

TYPICAL ELEVATIONS

MAXIMUM DESIGN LOAD RATING = + 80.0 PSF
(FOR SIZES SHOWN OR SMALLER) − 110.0 PSF

ALTERNATE SIZES CAN NOT EXCEED VENT OR FIXED SIZES OF SHOWN ELEVATIONS.

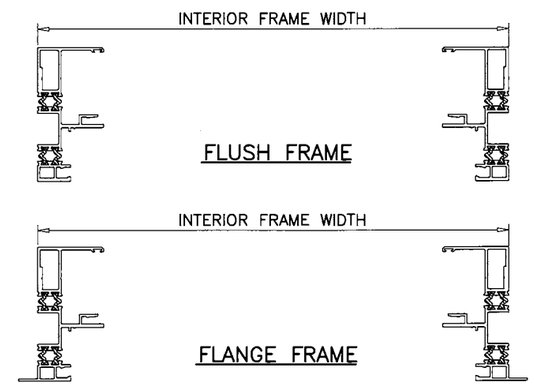

NOTE:
GLASS CAPACITIES ARE
BASED ON ASTM E1300–09 (3 SEC. GUSTS)
AND FLORIDA BUILDING COMMISSION
DECLARATORY STATEMENT DCA05–DEC–219

JUN 14 2016

JAVAD AHMAD
LICENSE
No. 70592
STATE OF FLORIDA
PROFESSIONAL ENGINEER

AL-FAROOQ CORPORATION
ENGINEERS & PRODUCT DEVELOPMENT
9360 SUNSET DRIVE, SUITE 220
MIAMI, FLORIDA 33173 (C.A.N. 3538)
TEL. (305) 264-8100 FAX. (305) 262-6978

COMP–ANL\W16–22ESW

ES–SW340 THERMAL ALUMINUM SLIDING WDW. (S.M.I.)

E.S. WINDOWS, LLC
3550 N.W. 49 STREET
MIAMI, FL. 33142
TEL. (305) 638–5151 FAX. (305) 638–5158

revisions:

no	date	by	description
A	06.08.16		NO CHANGE THIS SHEET

date: 04–07–16
scale: 1/2"=1'–0"
dr. by: TARIQ
chk. by:

drawing no.
W16–22

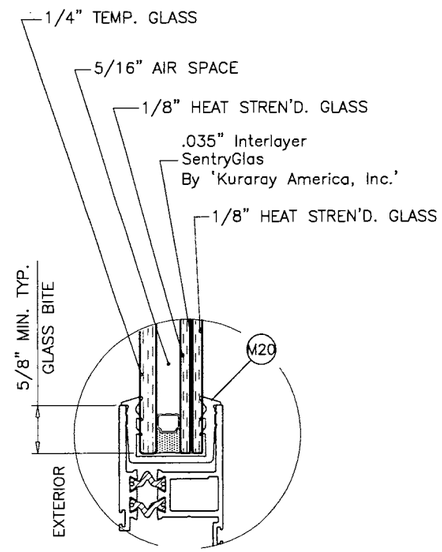

VENT

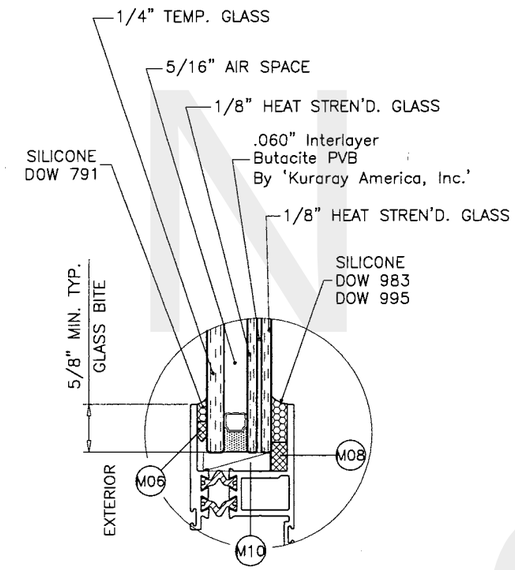

VENT

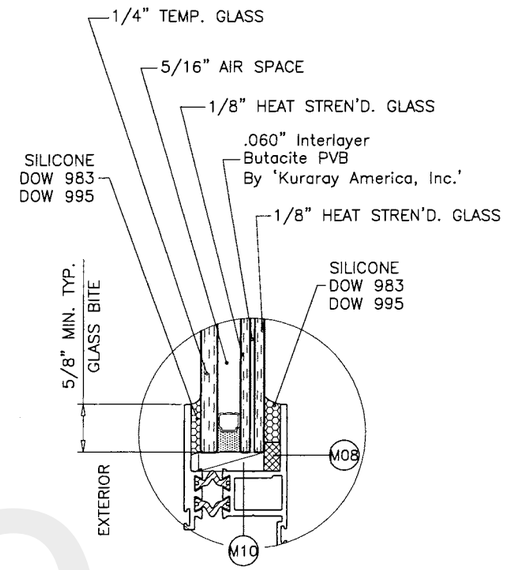

VENT

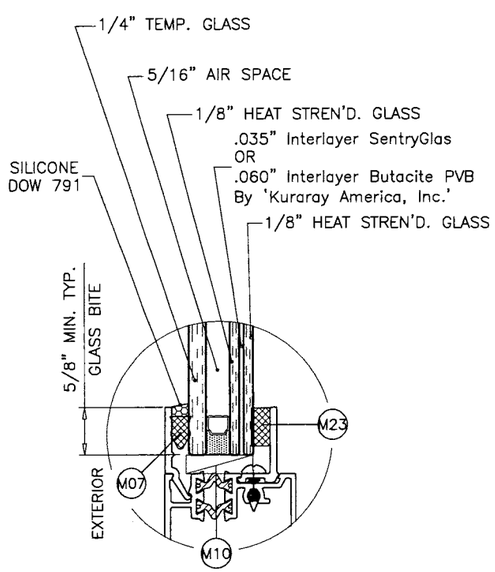

FIX. LITE

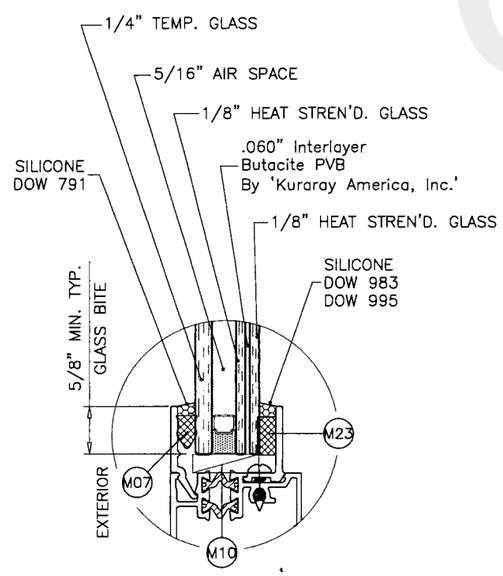

FIX. LITE

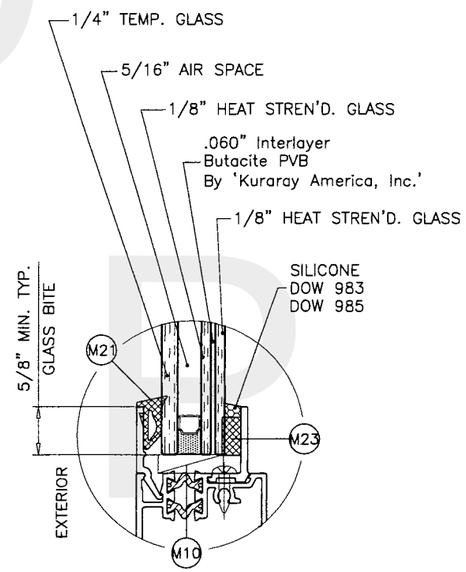

FIX. LITE

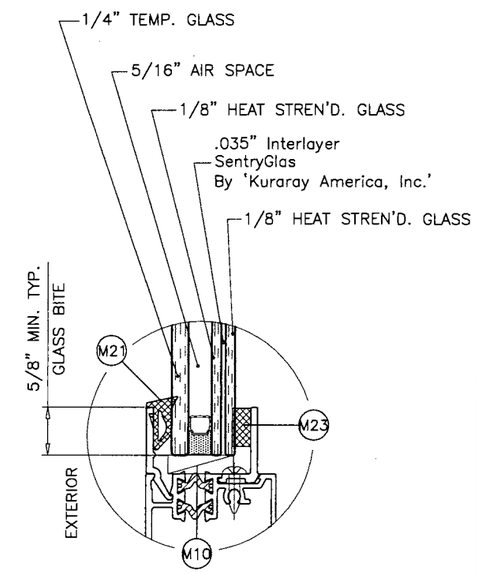

FIX. LITE

GLAZING DETAILS

7/8" OVERALL INSUL. LAM. GLASS

5/16" AIR SPACE CONSISTING OF:

SPACER:
'HELIMA' LOW PROFILE ALUMINUM SPACER
BY 'LINGERMANN GMBH'
AROUND THE PERIMETER OF THE GLASS.

PERIMETER SEALANT:
SILICONE
DOW CORNING 791
GE 2000

JUN 14 2016

JAVAD AHMAD
LICENSE
No. 70592
STATE OF FLORIDA
PROFESSIONAL ENGINEER

AL-FAROOQ CORPORATION
ENGINEERS & PRODUCT DEVELOPMENT
9360 SUNSET DRIVE, SUITE 220
MIAMI, FLORIDA 33173 (C.A.N. 3538)
TEL. (305) 264-8100 FAX. (305) 262-6978

COMP-ANL\W16-22ESW

ES-SW340 THERMAL ALUMINUM SLIDING WDW. (S.M.I.)

E.S. WINDOWS, LLC
3550 N.W. 49 STREET
MIAMI, FL. 33142
TEL. (305) 638-5151 FAX. (305) 638-5158

revisions:

no	date	by	description
A	06.08.16		NO CHANGE THIS SHEET

date: 04-07-16
scale: 1/2" = 1"
dr. by: TARIQ
chk. by:

drawing no.
W16-22

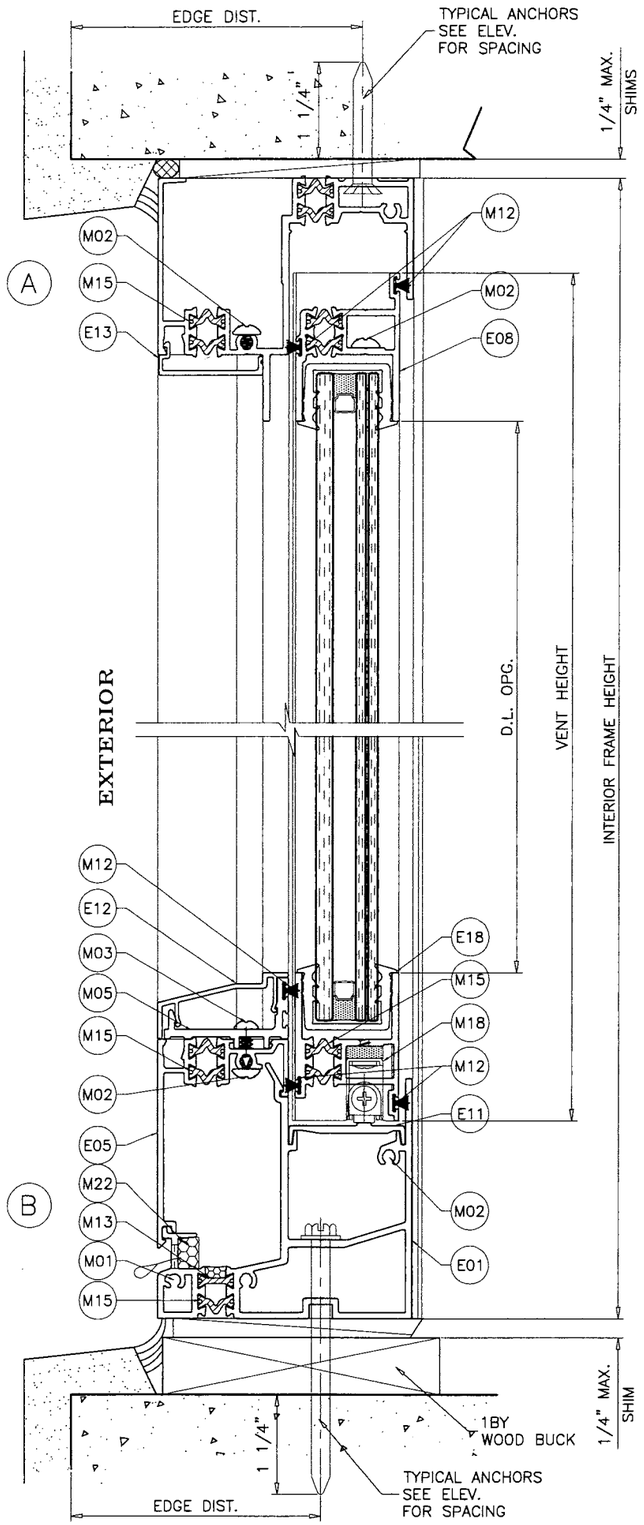

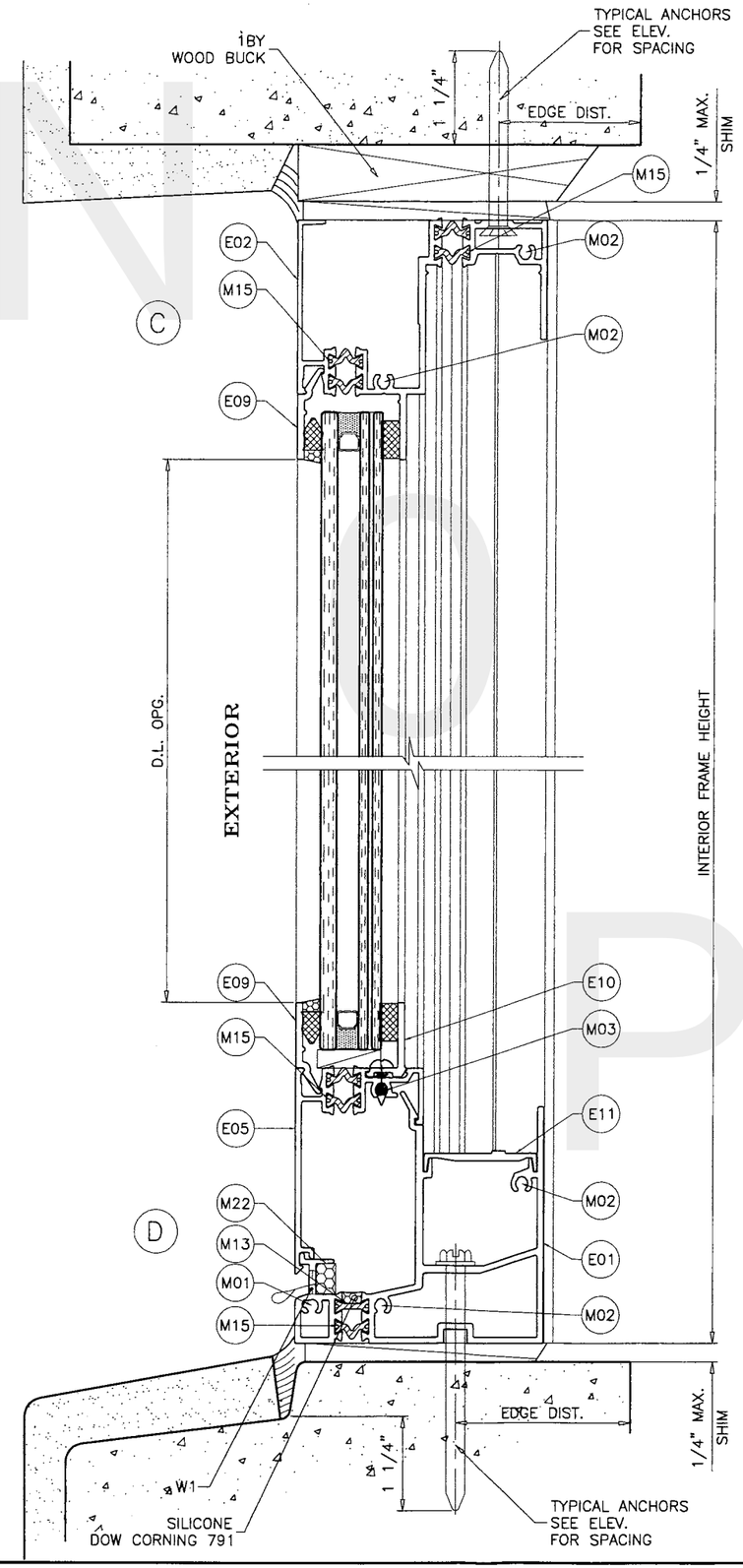

WEEPHOLES:

W1 = (2) 3/16" X 2" WEEPHOLES AT EACH VENT
(2) 3/16" X 2" WEEP HOLES AT FIX. LITE

JUN 14 2016

JAVAD AHMAD
LICENSE
No. 70592
STATE OF FLORIDA
PROFESSIONAL ENGINEER

AL-FAROOQ CORPORATION
ENGINEERS & PRODUCT DEVELOPMENT
9360 SUNSET DRIVE, SUITE 220
MIAMI, FLORIDA 33173 (C.A.N. 3538)
TEL. (305) 264-8100 FAX. (305) 262-6978

COMP-ANL\W16-22ESW

ES-SW340 THERMAL ALUMINUM SLIDING WDW. (S.M.I.)

E.S. WINDOWS, LLC
3550 N.W. 49 STREET
MIAMI, FL. 33142
TEL. (305) 638-5151 FAX. (305) 638-5158

revisions:

no	date	by	description
A	06.08.16		REV. PER RER COMMENTS

date: 04-07-16
scale: 1/2" = 1"
dr. by: TARIQ
chk. by:

drawing no.
W16-22

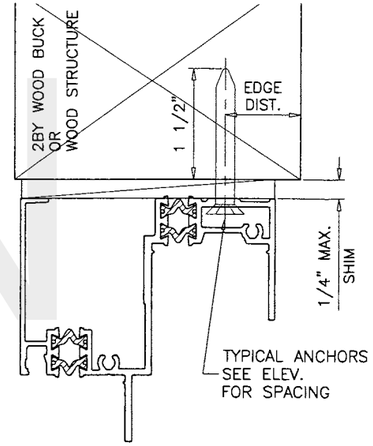

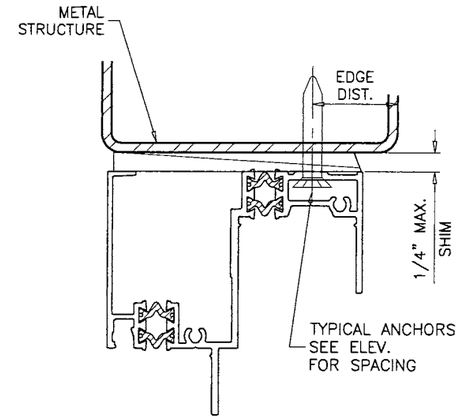

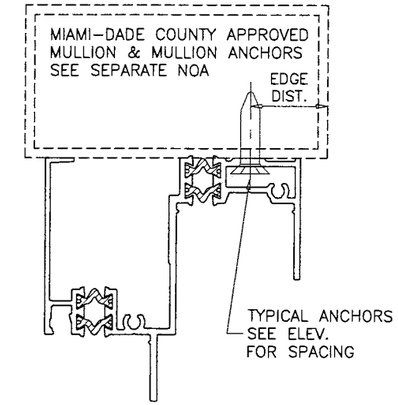

WOOD BUCKS AND METAL STRUCTURE NOT BY E.S. WINDOWS MUST SUSTAIN LOADS IMPOSED BY GLAZING SYSTEM AND TRANSFER THEM TO THE BUILDING STRUCTURE.

TYPICAL ANCHORS: SEE ELEV. FOR SPACING

1/4" DIA. CRETE-FLEX SS4 BY 'ELCO' (Fu=190 KSI, Fy=127 KSI)

1/4" DIA. ULTRACON SS4 410 BY 'ELCO' (Fu=190 KSI, Fy=164 KSI)

1/4" DIA. AGGRE-GATOR 300 BY 'ELCO' (Fu=95 KSI, Fy=57 KSI)

1/4" DIA. ULTRACON BY 'ELCO' (Fu=177 KSI, Fy=155 KSI)

INTO 2BY WOOD BUCKS OR WOOD STRUCTURES
1-1/2" MIN. PENETRATION INTO WOOD (HEAD/SILL/JAMBS)

THRU 1BY BUCKS INTO CONC. OR MASONRY
1-1/4" MIN. EMBED INTO CONCRETE (HEAD/SILL)
1-1/4" MIN. EMBED INTO CONC. OR MASONRY (JAMBS)

DIRECTLY INTO CONC. OR MASONRY
1-1/4" MIN. EMBED INTO CONCRETE (HEAD/SILL)
1-1/4" MIN. EMBED INTO CONC. OR MASONRY (JAMBS)

1/4" DIA. BI-FLEX 300 SELF DRILLING SCREWS BY 'ELCO'

1/4" DIA. DRIL-FLEX SELF DRILLING SCREWS BY 'ELCO' (GRADE 5 CRS)

INTO MIAMI-DADE COUNTY APPROVED MULLIONS (MIN. THK. = 1/8")

INTO METAL STRUCTURES
STEEL : 1/8" THK. MIN. (Fy = 36 KSI MIN.)
ALUMINUM : 1/8" THK. MIN. (6063-T5 MIN.)
(STEEL IN CONTACT WITH ALUMINUM TO BE PLATED OR PAINTED)

ANCHOR EDGE DISTANCES

INTO CONCRETE AND MASONRY = 2-1/2" MIN.
INTO WOOD STRUCTURE = 1" MIN.
INTO METAL STRUCTURE = 3/4" MIN.

WOOD AT HEAD, SILL OR JAMBS SG = 0.55 MIN.
CONCRETE AT HEAD, SILL OR JAMBS f'c = 3000 PSI MIN.
C-90 HOLLOW/FILLED BLOCK AT JAMBS f'm = 2000 PSI MIN.

JUN 14 2016

JAVAD AHMAD
LICENSE
No. 70592
STATE OF FLORIDA
PROFESSIONAL ENGINEER

AL-FAROOQ CORPORATION
ENGINEERS & PRODUCT DEVELOPMENT
9360 SUNSET DRIVE, SUITE 220
MIAMI, FLORIDA 33173 (C.A.N. 3538)
TEL. (305) 264-8100 FAX. (305) 262-6978

COMP-ANL\W16-22ESW

ES-SW340 THERMAL ALUMINUM SLIDING WDW. (S.M.I.)

E.S. WINDOWS, LLC
3550 N.W. 49 STREET
MIAMI, FL. 33142
TEL. (305) 638-5151 FAX. (305) 638-5158

revisions:

no	date	by	description
A	06.08.16		NO CHANGE THIS SHEET

date: 04-07-16
scale: 1/2" = 1"
dr. by: TARIQ
chk. by:

drawing no.
W16-22

sheet 5 of 11

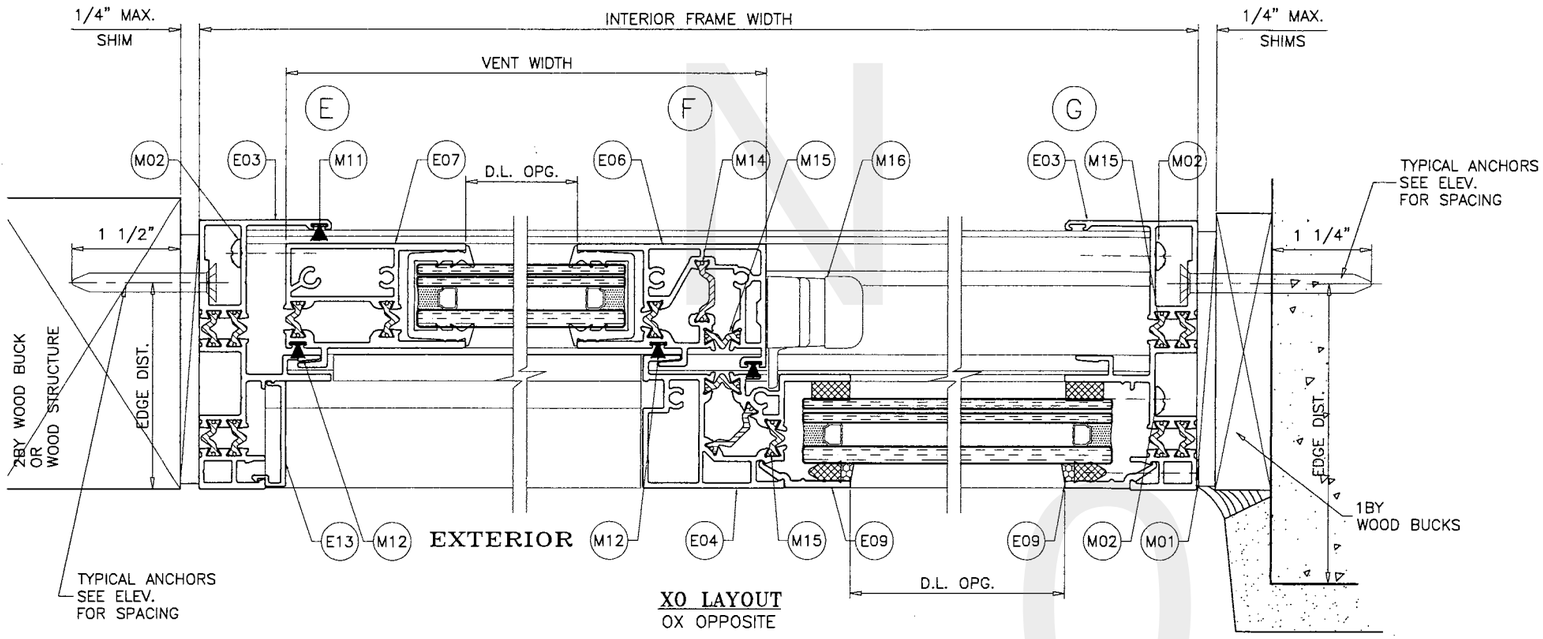

XO LAYOUT
OX OPPOSITE

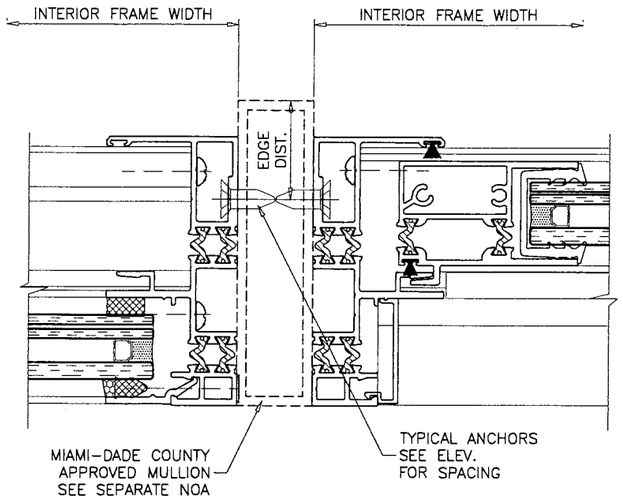

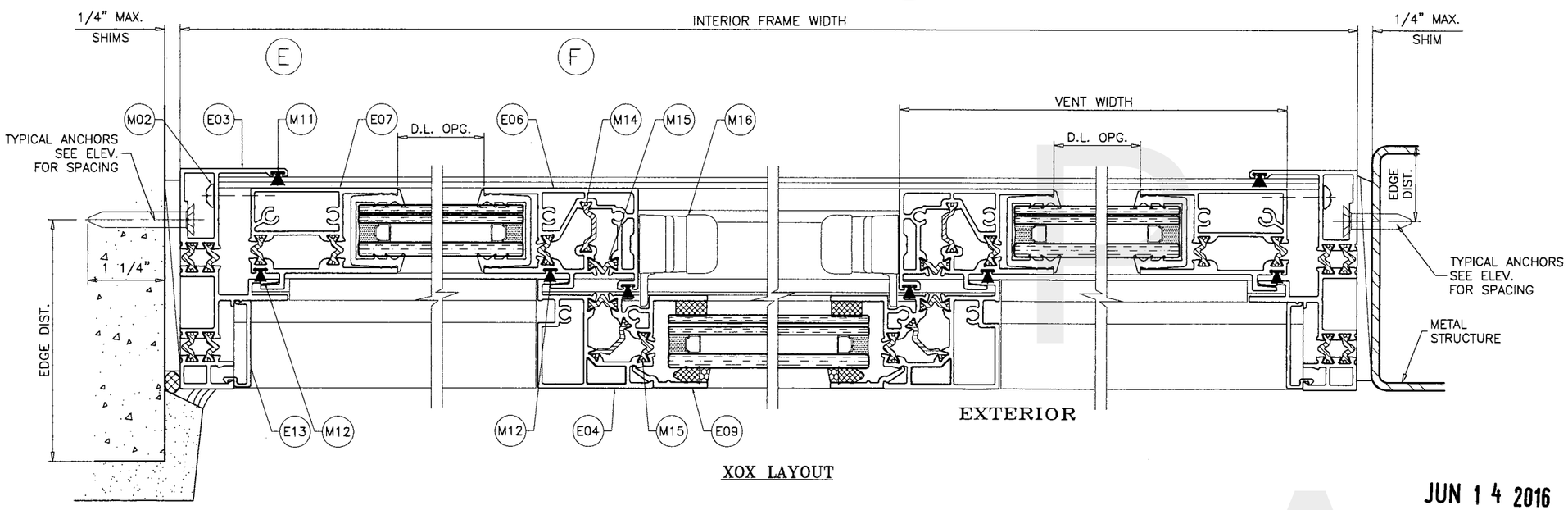

XOX LAYOUT

JUN 14 2016

JAVAD AHMAD
LICENSE
No. 70592
STATE OF FLORIDA
PROFESSIONAL ENGINEER

AL-FAROOQ CORPORATION
ENGINEERS & PRODUCT DEVELOPMENT
9360 SUNSET DRIVE, SUITE 220
MIAMI, FLORIDA 33173 (C.A.N. 3538)
TEL. (305) 264-8100 FAX. (305) 262-6978

COMP-ANL\W16-22ESW

ES-SW340 THERMAL ALUMINUM SLIDING WDW. (S.M.I.)

E.S. WINDOWS, LLC
3550 N.W. 49 STREET
MIAMI, FL. 33142
TEL. (305) 638-5151 FAX. (305) 638-5158

revisions:

no	date	by	description
A	06.08.16		NO CHANGE THIS SHEET

date: 04-07-16
scale: 1/2" = 1"
dr. by: TARIQ
chk. by:

drawing no.
W16-22

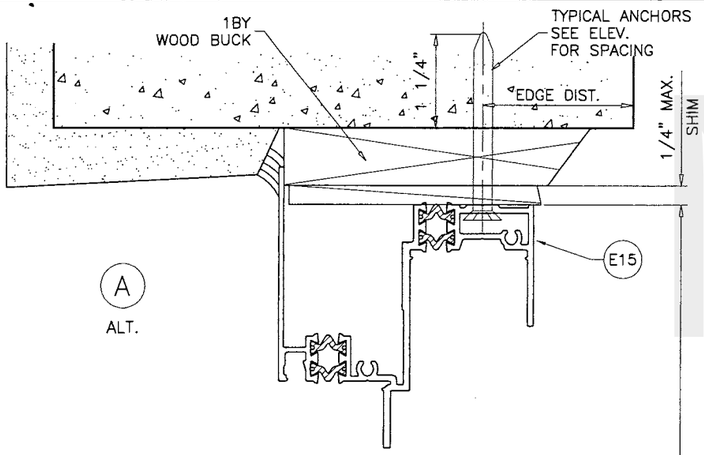

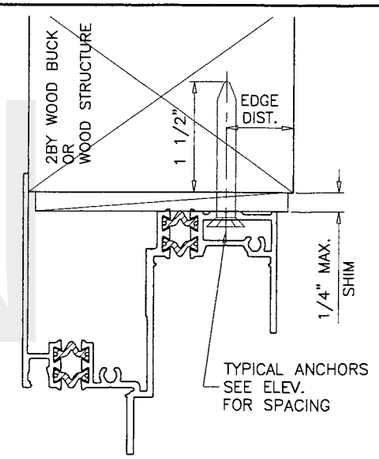

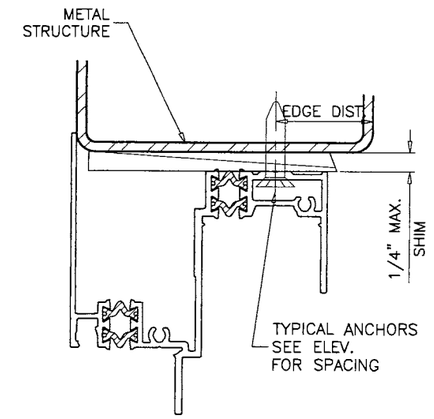

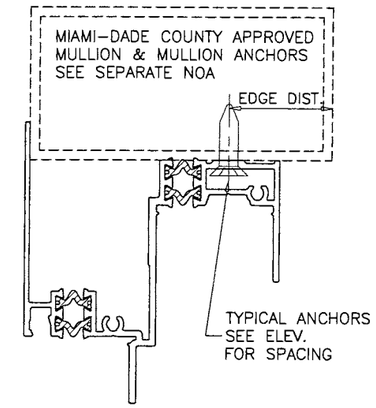

INTERIOR FRAME HEIGHT

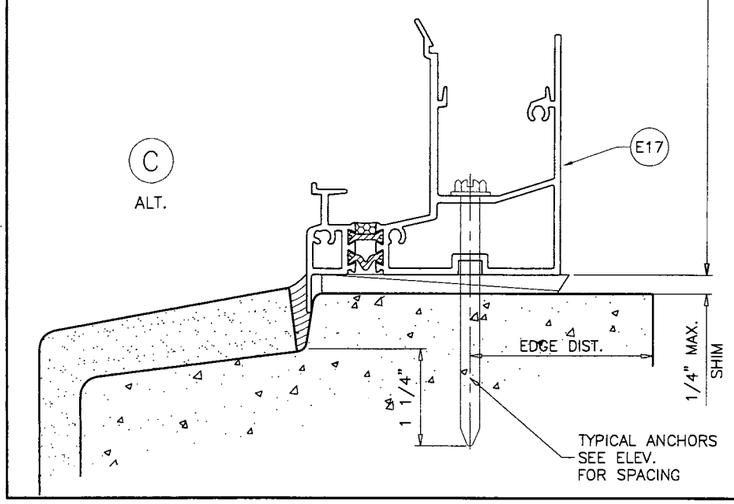

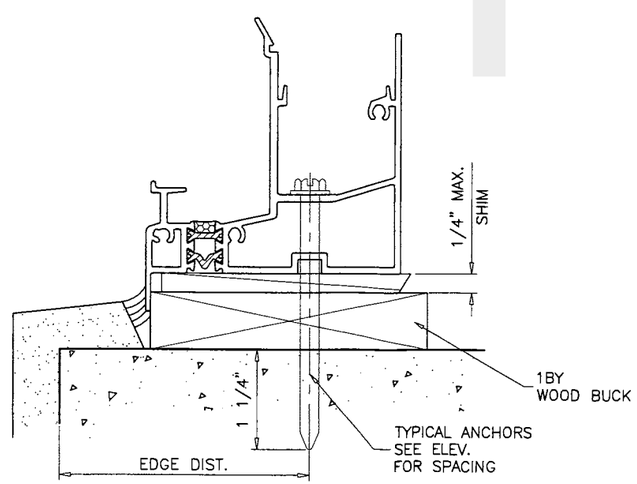

INSTALLATION DETAILS WITH FLANGE FRAMES

JUN 14 2016

JAVAD AHMAD
LICENSE
No. 70592
STATE OF
FLORIDA
PROFESSIONAL ENGINEER

AL-FAROOQ CORPORATION
ENGINEERS & PRODUCT DEVELOPMENT
9360 SUNSET DRIVE, SUITE 220
MIAMI, FLORIDA 33173 (C.A.N. 3538)
TEL. (305) 264-8100 FAX. (305) 262-6978

COMP-ANL\W16-22ESW

ES-SW340 THERMAL ALUMINUM SLIDING WDW. (S.M.I.)

E.S. WINDOWS, LLC
3550 N.W. 49 STREET
MIAMI, FL. 33142
TEL. (305) 638-5151 FAX. (305) 638-5158

revisions:

no	date	by	description
A	06.08.16		REV. PER RER COMMENTS

date: 04-07-16
scale: 1/2" = 1"
dr. by: TARIQ
chk. by:

drawing no.
W16-22

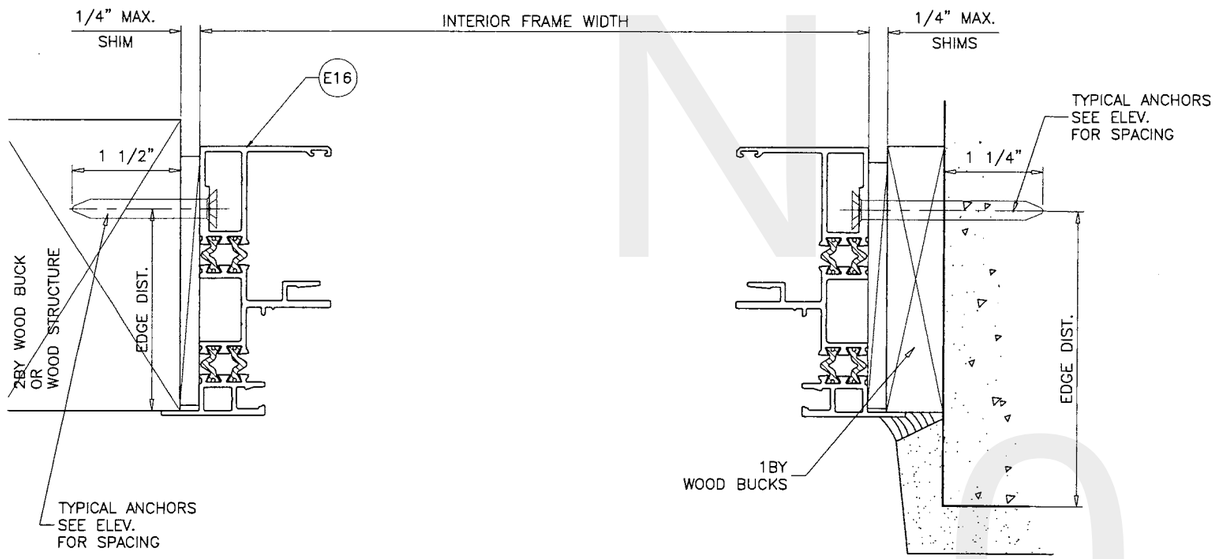

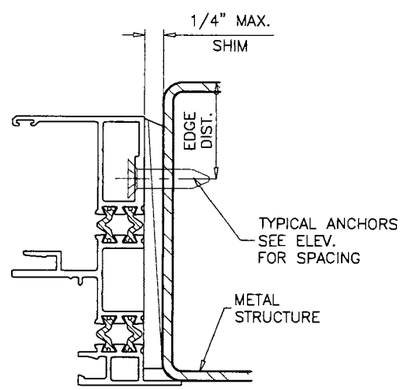

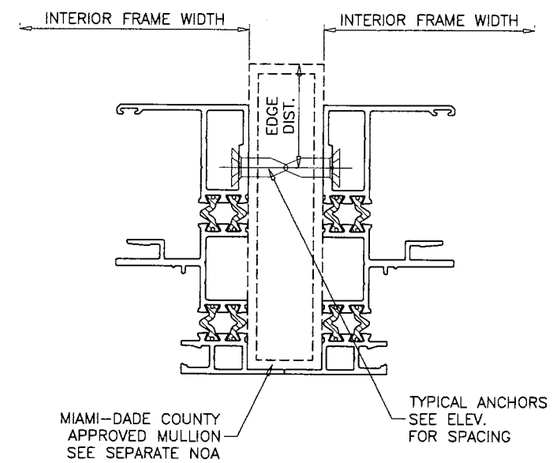

INSTALLATION DETAILS WITH FLANGE FRAMES

JUN 14 2016

JAVAD AHMAD
LICENSE
No. 70592
STATE OF
FLORIDA
PROFESSIONAL ENGINEER

AL-FAROOQ CORPORATION
ENGINEERS & PRODUCT DEVELOPMENT
9360 SUNSET DRIVE, SUITE 220
MIAMI, FLORIDA 33173 (C.A.N. 3538)
TEL. (305) 264-8100 FAX. (305) 262-6978

COMP-ANL\W16-22ESW

ES-SW340 THERMAL ALUMINUM SLIDING WDW. (S.M.I.)

E.S. WINDOWS, LLC
3550 N.W. 49 STREET
MIAMI, FL. 33142
TEL. (305) 638-5151 FAX. (305) 638-5158

revisions:

no	date	by	description
A	06.08.16		NO CHANGE THIS SHEET

date: 04-07-16
scale: 1/2" = 1"
dr. by: TARIQ
chk. by:

drawing no.
W16-22

ITEM #	PART #	REQD.	DESCRIPTION	MATERIAL	MANF./SUPPLIER/REMARKS
E01	ES-SW340-501	1	FRAME SILL FLUSH	6063-T6	–
E02	ES-H340-505	1	FRAME HEAD FLUSH	6063-T6	–
E03	ES-SW340-502	2	FRAME JAMB FLUSH	6063-T6	–
E04	ES-H340-507	AS REQD.	FIX. MEETING RAIL	6063-T6	–
E05	ES-SW340-503	–	FIXED BOTTOM	6063-T6	–
E06	ES-H340-508	–	VENT SIDE RAIL	6063-T6	–
E07	ES-SW340-504	2/ VENT	VERTICAL RAIL	6063-T6	–
E08	ES-H340-510	1/ VENT	VENT TOP RAIL	6063-T6	–
E09	ES-H340-003	4/ LITE	GLASS STOP	6063-T5	–
E10	ES-SW340-005	4/ LITE	HORIZONTAL FIXED GLASS STOP	6063-T6	–
E11	ES-SW340-006	1/ VENT	TRACK	6005-T5	–
E12	ES-SW340-007	–	COVER	6063-T5	–
E13	ES-H340-021	–	HORIZONTAL/VERTICAL TRIM	6063-T5	–
E14	ES-H340-007	–	TRIM FOR SCREEN	6063-T6	–
E15	ES-H340-506	1	FRAME HEAD FLANGE	6063-T6	–
E16	ES-SW340-506	2	FRAME JAMB FLANGE	6063-T6	–
E17	ES-SW340-505	1	FRAME SILL FLANGE	6063-T6	–
E18	ES-SW340-507	1/ VENT	VENT BOTTOM RAIL	6063-T6	–
M01	#10 X 1-1/2" FH	AS REQD.	FRAME ASSEMBLY FASTENER	ST/ST	–
M02	#10 X 1" PH	–	FRAME AND FIX. PANEL FASTENERS	ST/ST	–
M03	#8 X 1/2" PH	–	FOR ROLLER, PLASTIC PROFILE AND GLASS STOP	ST/ST	SPACED AT 10" O.C.
M04	#8 X 3/4" FH SMS	–	SWEEP LOCK FASTENER	–	–
M05	ES-SW340-301	–	PLASTIC EXTRUSION	RIGID PVC	–
M06	ES-H340-G05	AS REQD.	GLAZING GASKET	SILICONE	DUROMETER 70±5 SHORE A
M07	ES-H340-G02	AS REQD.	GLAZING GASKET	SILICONE	DUROMETER 70±5 SHORE A
M08	V2200	AS REQD.	GLAZING TAPE (3/16" X 3/8")	FOAM	–
M10	ES-21-B04A	2 LITE	SETTING BLOCKS	SILICONE	DUROMETER 80±5 SHORE A
M11	W23212NK	AS REQD.	WEATHERSTRIP	–	ULTRAFAB
M12	W23202NK	AS REQD.	WEATHERSTRIP	–	ULTRAFAB
M13	1142	AS REQD.	INSULBAR 12 MM FLAT	POLYAMIDE	ENSINGER
M14	2479	AS REQD.	INSULBAR 20 MM OFFSET	POLYAMIDE	ENSINGER
M15	2531	AS REQD.	INSULBAR 12 MM OFFSET	POLYAMIDE	ENSINGER
M16	3032	1/ VENT	SWEEP LOCK	DIE CAST ALUM	AT 13" FROM EACH END
M17	ES1050-PL1	–	FLAT BOLT	ST/ST	–
M18	RU-340-IR	2/ VENT	TANDEM ROLLER	ST/ST	AT 5" FROM EACH END
M20	ES-H340-G01	–	GLAZING GASKET	SILICONE	DUROMETER 70±5 SHORE A
M21	PS-1127E	–	GLAZING GASKET	SILICONE	DUROMETER 70±5 SHORE A
M22	ES-SD450-F01	AS REQD.	RETICULATED FOAM (5/8" X 5/8" X 2")	FOAM	–
M23	80-378	–	GLAZING GASKET	EPDM	DUROMETER 80±5 SHORE A

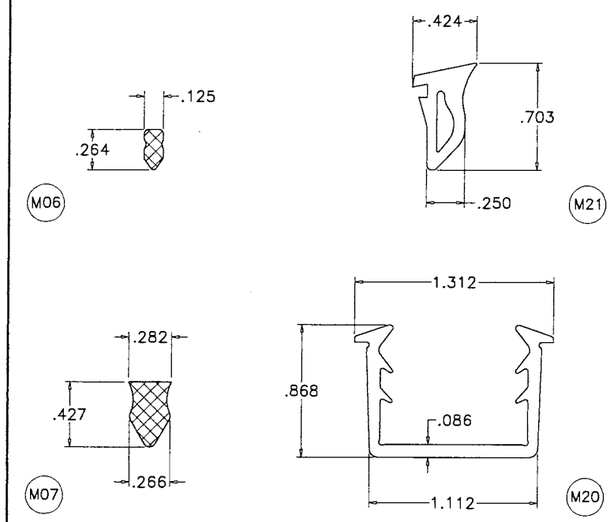

GLAZING GASKETS
SCALE 1:1

MATERIAL = SILICONE
HARDNESS = 70±5
TENSILE STRENGTH = 1075 PSI
ELONGATION AT BREAK = 167%
TEAR STRENGTH = 121 Lb/in
BRITTLENESS TEMPERATURE = -40° F
COMPRESSION SET = 11% (22h @ 212°F)

SEALANTS:

FRAME AND VENT CORNERS AND INSTALLATION SCREWS AT SILL SEALED WITH 'ACCURA' ARCYLIC LATEX SEALANT BY 'M-D BUILDING PRODUCTS'.

JUN 14 2016

JAVAD AHMAD
LICENSE
No. 70892
STATE OF FLORIDA
PROFESSIONAL ENGINEER

AL-FAROOQ CORPORATION
ENGINEERS & PRODUCT DEVELOPMENT
9360 SUNSET DRIVE, SUITE 220
MIAMI, FLORIDA 33173 (C.A.N. 3538)
TEL. (305) 264-8100 FAX. (305) 262-6978

COMP-ANL\W16-22ESW

ES-SW340 THERMAL ALUMINUM SLIDING WDW. (S.M.I.)

E.S. WINDOWS, LLC
3550 N.W. 49 STREET
MIAMI, FL. 33142
TEL. (305) 638-5151 FAX. (305) 638-5158

revisions:

no	date	by	description
A	06.08.16	REV. PER RER COMMENTS	

date: 04-07-16
scale: 1/2" = 1"
dr. by: TARIQ
chk. by:

drawing no. W16-22

sheet 9 of 11

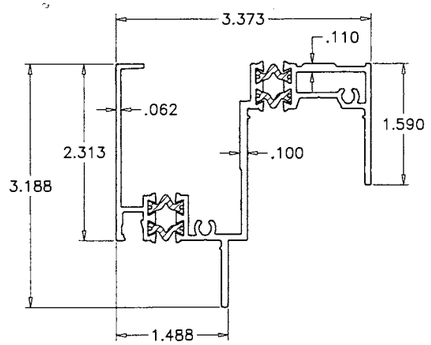

E02 FRAME HEAD FLUSH

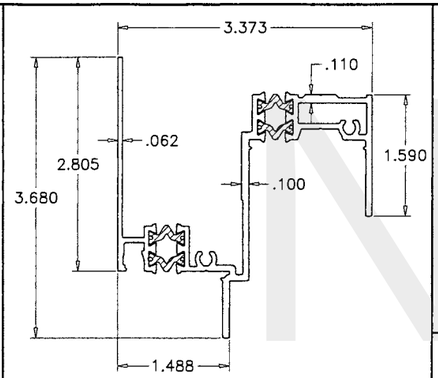

E15 FRAME HEAD FLANGE

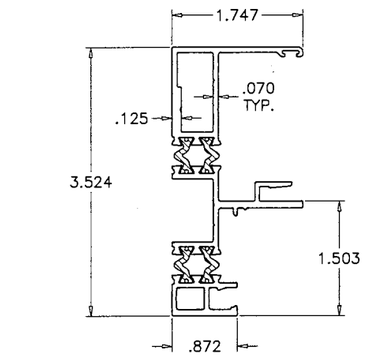

E03 FRAME JAMB FLUSH

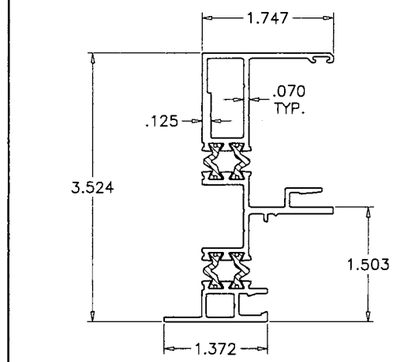

E16 FRAME JAMB FLANGE

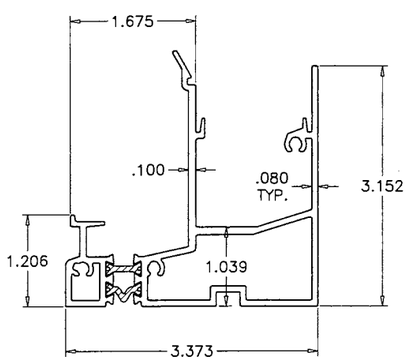

E01 FRAME SILL FLUSH

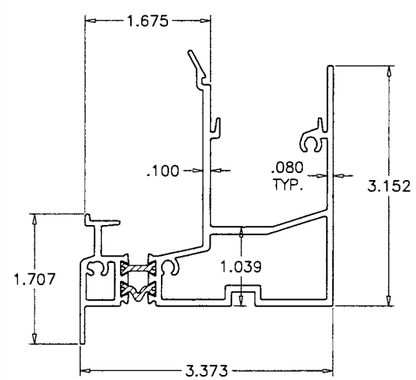

E17 FRAME SILL FLANGE

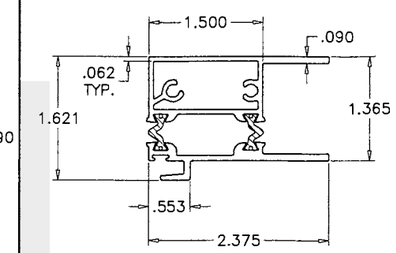

E06 VENT SIDE RAIL

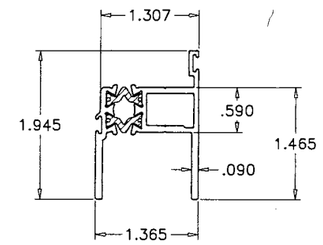

E08 VENT TOP RAIL

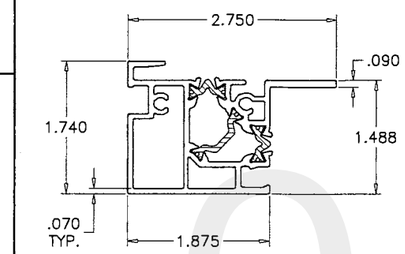

E04 FIX. MEETING RAIL

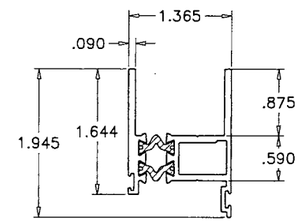

E18 VENT BOTTOM RAIL

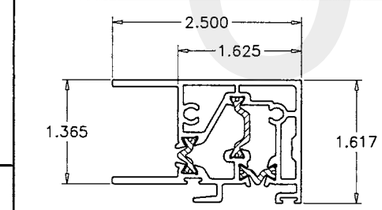

E07 VERTICAL RAIL

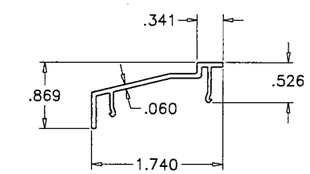

E12 COVER

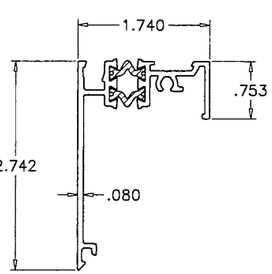

E05 FIX. BOTTOM

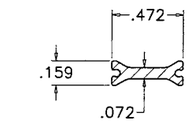

M13 12MM FLAT

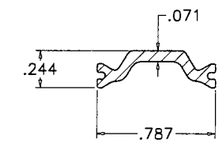

M14 20MM OFFSET

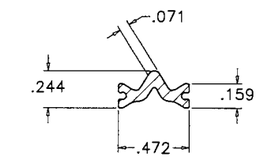

M15 12MM OFFSET

TECATHERM® 66 GF INSULBARS
SCALE 1:1

MATERIAL = POLYAMIDE
TENSILE STRENGTH = 13031 PSI
RATE OF BURN = .752 IN./MIN.
SELF IGNITION TEMP. = 793° F
FLASH IGNITION TEMP. – 781°C
SMOKE DENSITY = 1.63

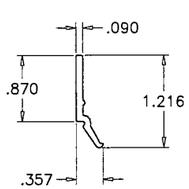

E09 GLASS STOP

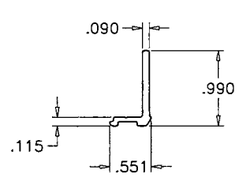

E10 HORIZ. FIXED GLASS STOP

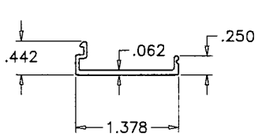

E13 HORIZ./VERTICAL TRIM

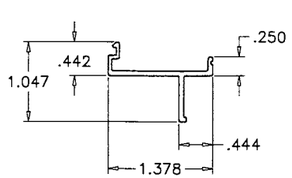

TRIM FOR SCREEN E14

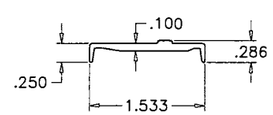

E11 TRACK

JUN 14 2016

JAVAD AHMAD
LICENSE
No. 70592
STATE OF FLORIDA
PROFESSIONAL ENGINEER

AL-FAROOQ CORPORATION
ENGINEERS & PRODUCT DEVELOPMENT
9360 SUNSET DRIVE, SUITE 220
MIAMI, FLORIDA 33173 (C.A.N. 3538)
TEL. (305) 264-8100 FAX. (305) 262-6978

COMP-ANL\W16-22ESW

ES-SW340 THERMAL ALUMINUM SLIDING WDW. (S.M.I.)

E.S. WINDOWS, LLC
3550 N.W. 49 STREET
MIAMI, FL. 33142
TEL. (305) 638-5151 FAX. (305) 638-5158

revisions:

no	date	by	description
A	06.08.16	REV. PER RER	COMMENTS

date: 04-07-16
scale: 1/2" = 1"
dr. by: TARIQ
chk. by:

drawing no. W16-22

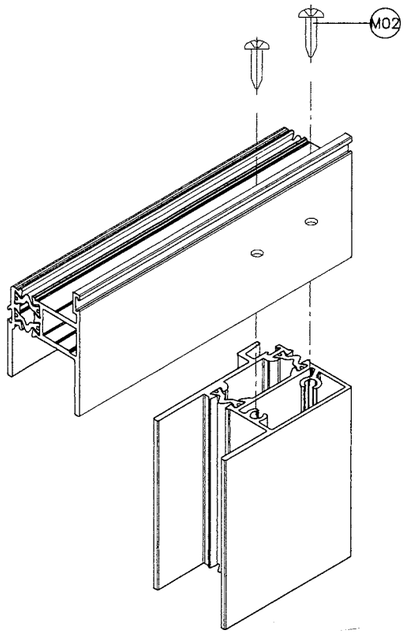

VENT TOP CORNERS

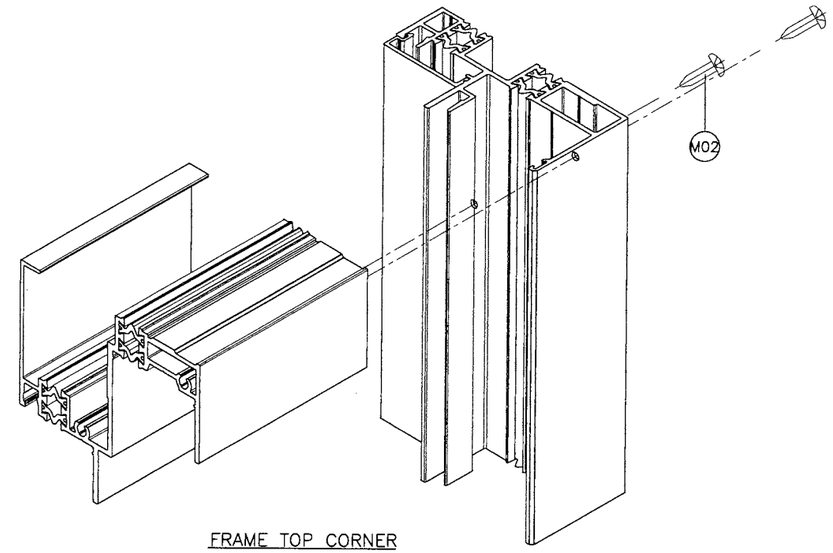

FRAME TOP CORNER

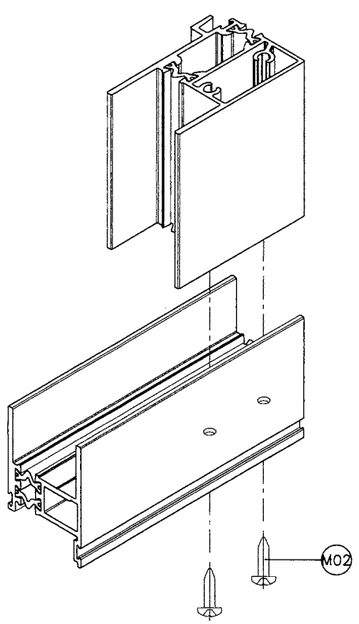

VENT BOTTOM CORNERS

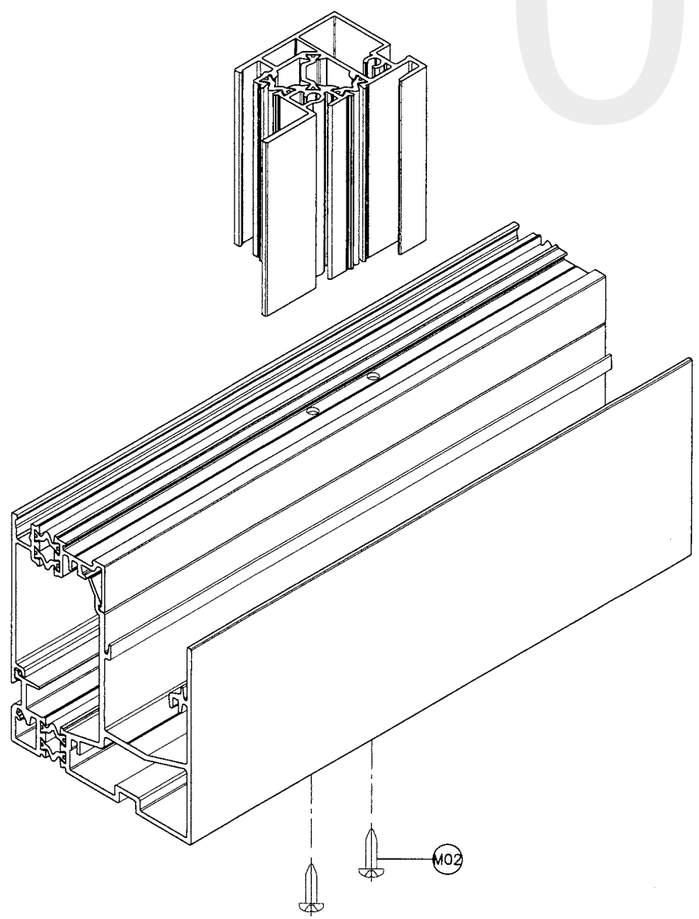

FIXED MTG. RAIL CORNER

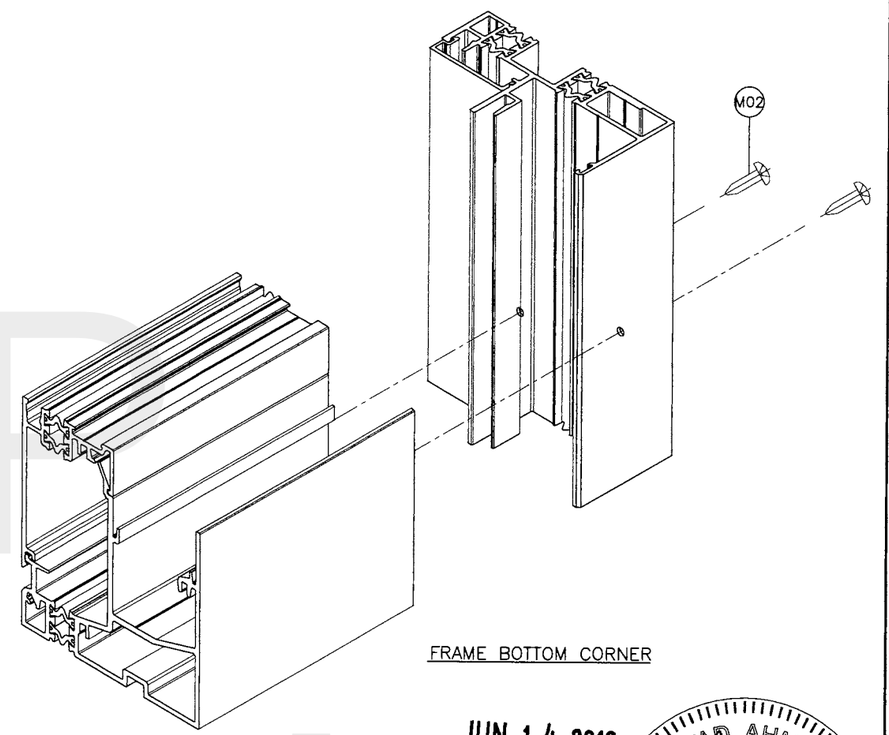

FRAME BOTTOM CORNER

JUN 14 2016

JAVAD AHMAD
LICENSE
No. 70592
STATE OF FLORIDA
PROFESSIONAL ENGINEER

AL-FAROOQ CORPORATION
ENGINEERS & PRODUCT DEVELOPMENT
9360 SUNSET DRIVE, SUITE 220
MIAMI, FLORIDA 33173 (C.A.N. 3538)
TEL. (305) 264-8100 FAX. (305) 262-6978

COMP-ANL\W16-22ESW

ES-SW340 THERMAL ALUMINUM SLIDING WDW. (S.M.I.)

E.S. WINDOWS, LLC
3550 N.W. 49 STREET
MIAMI, FL. 33142
TEL. (305) 638-5151 FAX. (305) 638-5158

revisions:

no	date	by	description
A	06.08.16		NO CHANGE THIS SHEET

date: 04-07-16
scale: 1/2" = 1"
dr. by: TARIQ
chk. by:

drawing no.
W16-22

sheet 11 of 11