MIAMI-DADE

MIAMI-DADE COUNTY, FLORIDA
METRO-DADE FLAGLER BUILDING

BUILDING CODE COMPLIANCE OFFICE
METRO-DADE FLAGLER BUILDING
140 WEST FLAGLER STREET, SUITE 1603
MIAMI, FLORIDA 33130-1563
(305) 375-2901 FAX (305) 375-2908

CONTRACTOR LICENSING SECTION
(305) 375-2527 FAX (305) 375-2558

CONTRACTOR ENFORCEMENT DIVISION
(305) 375-2966 FAX (305) 375-2908

PRODUCT CONTROL DIVISION
(305) 375-2902 FAX (305) 372-6339

PRODUCT CONTROL NOTICE OF ACCEPTANCE

Premdor Entry Systems
911 E. Jeferson, P.O. Box 76
Pittsburgh ,KS 66762

Your application for Notice of Acceptance (NOA) of:
Series Entergy 6-8 S-W/E Inswing Opaque Residential Insulated Steel Door w/Steel Frame
under Chapter 8 of the Code of Miami-Dade County governing the use of Alternate Materials and Types of Construction, and completely described herein, has been recommended for acceptance by the Miami-Dade County Building Code Compliance Office (BCCO) under the conditions specified herein.

This NOA shall not be valid after the expiration date stated below. BCCO reserves the right to secure this product or material at any time from a jobsite or manufacturer's plant for quality control testing. If this product or material fails to perform in the approved manner, BCCO may revoke, modify, or suspend the use of such product or material immediately. BCCO reserves the right to revoke this approval, if it is determined by BCCO that this product or material fails to meet the requirements of the South Florida Building Code.

The expense of such testing will be incurred by the manufacturer.

ACCEPTANCE NO.: 01-0313.03
EXPIRES: 02/19/2006

Raul Rodriguez
Chief Product Control Division

THIS IS THE COVERSHEET, SEE ADDITIONAL PAGES FOR SPECIFIC AND GENERAL CONDITIONS
BUILDING CODE & PRODUCT REVIEW COMMITTEE

This application for Product Approval has been reviewed by the BCCO and approved by the Building Code and Product Review Committee to be used in Miami-Dade County, Florida under the conditions set forth above.

Francisco J. Quintana, R.A.
Director
Miami-Dade County
Building Code Compliance Office

APPROVED: 04/19/2001

Premdor Entry Systems

ACCEPTANCE NO.: **01-0313.03**

APPROVED : APR 19 2001

EXPIRES : **February 19, 2006**

NOTICE OF ACCEPTANCE: SPECIFIC CONDITIONS

1. DESCRIPTION OF UNIT

1.1 This **renews** the Notice of Acceptance No. 97-0713.12 which was issued on February 19, 1998. It approves a residential insulated steel door, as described in Section 2 of this Notice of Acceptance, designed to comply with the South Florida Building Code (SFBC), 1994 Edition for Miami-Dade County, for the locations where the pressure requirements, as determined by SFBC Chapter 23, do not exceed the Design Pressure Rating values indicated in the approved drawings.

2. PRODUCT DESCRIPTION

2.1 The **Series Entergy 6' 8" S-W/E Inswing OpaqueResidential Insulated Steel Door in an Adjustable Steel Frame-Impact** and its components shall be constructed in strict compliance with the following documents: Drawing No **31-1006-EW-I**, Sheets 1 thru 4 of 4, titled "Premdor (Entergy Wood Edge) Steel door in an Adjustable Steel Frame (Inswing)" dated 6/25/97 with revision C, dated 01/20/01, bearing the Miami-Dade County Product Control approval stamp with the Notice of Acceptance number and approval date by the Miami-Dade County Product Control Division. These documents shall hereinafter be referred to as the approved drawings.

3. LIMITATIONS

3.1 This approval applies to single unit applications of single door only, as shown in approved drawings.

3.2 Unit shall be installed only at locations protected by a canopy or overhang such that the angle between the edge of canopy or overhang to sill is less than 45 degrees. Unless unit is installed in non-habitable areas where the unit and the area are designed to accept water infiltration.

4. INSTALLATION

4.1 The residential insulated steel door and its components shall be installed in strict compliance with the approved drawings.

4.2 Hurricane protection system (shutters): the installation of this unit **will not require** a hurricane protection system.

5. LABELING

5.1 Each unit shall bear a permanent label with the manufacturer's name or logo, city, state and following statement: "Miami-Dade County Product Control Approved".

6. BUILDING PERMIT REQUIREMENTS

6.1 Application for building permit shall be accompanied by copies of the following:

6.1.1 This Notice of Acceptance

6.1.2 Duplicate copies of the approved drawings, as identified in Section 2 of this Notice of Acceptance, clearly marked to show the components selected for the proposed installation.

6.1.3 Any other documents required by the Building Official or the South Florida Building Code (SFBC) in order to properly evaluate the installation of this system.

Manuel Perez

Manuel Perez, P.E. Product Control Examiner
Product Control Division

Premdor Entry Systems

ACCEPTANCE NO.: **01-0313.03**

APPROVED : APR 19 2001

EXPIRES : **February 19, 2006**

NOTICE OF ACCEPTANCE: STANDARD CONDITIONS

1. Renewal of this Acceptance (approval) shall be considered after a renewal application has been filed and the original submitted documentation, including test supporting data, engineering documents, are no older than eight (8) years.

2. Any and all approved products shall be permanently labeled with the manufacturer's name, city, state, and the following statement: "Miami-Dade County Product Control Approved", or as specifically stated in the specific conditions of this Acceptance.

3. Renewals of Acceptance will not be considered if:
   a) There has been a change in the South Florida Building Code affecting the evaluation of this product and the product is not in compliance with the code changes;
   b) The product is no longer the same product (identical) as the one originally approved;
   c) If the Acceptance holder has not complied with all the requirements of this acceptance, including the correct installation of the product;
   d) The engineer who originally prepared, signed and sealed the required documentation initially submitted is no longer practicing the engineering profession.

4. Any revision or change in the materials, use, and/or manufacture of the product or process shall automatically be cause for termination of this Acceptance, unless prior written approval has been requested (through the filing of a revision application with appropriate fee) and granted by this office.

5. Any of the following shall also be grounds for removal of this Acceptance:
   a) Unsatisfactory performance of this product or process.
   b) Misuse of this Acceptance as an endorsement of any product, for sales, advertising or any other purpose.

6. The Notice of Acceptance number preceded by the words Miami-Dade County, Florida, and followed by the expiration date may be displayed in advertising literature. If any portion of the Notice of Acceptance is displayed, then it shall be done in its entirety.

7. A copy of this Acceptance as well as approved drawings and other documents, where it applies, shall be provided to the user by the manufacturer or its distributors and shall be available for inspection at the job site at all time. The engineer need not reseal the copies.

8. Failure to comply with any section of this Acceptance shall be cause for termination and removal of Acceptance.

9. This Notice of Acceptance consists of pages 1, 2 and this last page 3.

END OF THIS ACCEPTANCE

Manuel Perez, P.E. Product Control Examiner
Product Control Division

Premdor Entry Systems

ACCEPTANCE NO.: **01-0313.03**

APPROVED : APR 19 2001

EXPIRES : **February 19, 2006**

NOTICE OF ACCEPTANCE EVIDENCE SUBMITTED
(For File ONLY. Not part of NOA.)

A. DRAWINGS

1. Manufacturer's die drawings and sections.
2. Drawing No. **31-1006-EWI**, Sheets 1 thru 4 of 4, titled "Premdor (Entergy Wood Edge) Steel Door in an Adjustable Steel Frame (Inswing)" dated 6/25/97 with revision C dated 01/20/01

B. TESTS

1. Test reports on 1) Air Infiltration Test, per SFBC, PA 202-94
   2) Uniform Static Air Pressure Test, Loading per SFBC, PA 202-94
   3) Water Resistance Test, per SFBC, PA 202-94
   4) Large Missile Impact Test per SFBC, PA 201-94
   5) Cyclic Wind Pressure Loading per SFBC, PA 203-94
   6) Forced Entry Test, per SFBC 3603.2 and PA 202-94

   along with marked-up drawings and installation diagram of an inswinging residential insulated steel doorsin an Adjustable Steel Frame-Impact, prepared by National Certified Testing Laboratories, Inc., Test Report No. **NCTL 210-1916-7,8,9 (S) (C) (I) (F)**, dated 05/05/97, signed and sealed by Barry D. Portnoy, P.E.

C. CALCULATIONS

1. Anchor Calculations and structural analysis, prepared by Product & Application Engineering, Inc., Project No. 97-0705, Report No. 03, dated March 1997, signed and sealed by Ronald R. Rainey, P.E.

D. MATERIAL CERTIFICATIONS

1. Tensile Test prepared by Celotex Corporation, MTS Job No.258163, dated June 16, 1997, for sheet steel samples, tested per ASTM E8-93a, signed and sealed by Peter Read, P.E.
2. Report titled "Small Scale Fire and Hose Stream Tests on 20 Min. (BASF Elastopor) Foam-Core Door" prepared by Underwriters Laboratories, Inc., File No. R18466, tested per ASTM E-152, dated July 3, 1997, signed by Dick Walther and reviewed by Howard Gruszynski

E. STATEMENTS

1. None

F. OTHER

1. Notice of Acceptance No. 97-0731.12, issued to Premdor Entry Systems for their Premdor (Entergy Steel/Wood Edge) Inswing Residential Insulated Steel Door in an Adjustable Steel Frame, approved on 02/19/98 and expiring on 02/19/01.

Manuel Perez

Manuel Perez, P.E. Product Control Examiner
Product Control Division

Premdor Entry Systems

ACCEPTANCE NO.: 01-0313.03

APPROVED : APR 19 2001

EXPIRES : February 19, 2006

NOTICE OF ACCEPTANCE EVIDENCE SUBMITTED

(For File ONLY. Not part of NOA.)

TESTSPERFORMED: **RESULTS:**

TEST	TEST LOADS	DESIGN LOADS
AIR INFILTRATION @ 1.57 PSF SFBC PA 202-94 (0.50 CFM/FT^2)	0.11 CFM/FT^2	----------
UNIFORM STATIC PRESSURE @ DESIGN LOAD SFBC PA 202-94 POSITIVE	+66.0 PSF	+66.0 PSF
UNIFORM STATIC PRESSURE @ DESIGN LOAD SFBC PA 202-94 NEGATIVE	-66.0 PSF	-66.0 PSF
WATER RESISTANCE (PSF) SFBC PA 202-94	Not qualified	----------
UNIFORM STATIC AIR PRESSURE @ FULL TEST LOAD SFBC PA 202-94 POSITIVE	+100.5 PSF	+67.0 PSF
UNIFORM STATIC AIR PRESSURE @ FULL TEST LOAD SFBC PA 202-94 NEGATIVE	-100.5 PSF	-67.0 PSF
FORCED-ENTRY RESISTANCE (FER) SFBC Section 3603.02 and SFBC PA 202-94	SATISFACTORY	----------
LARGE MISSILE IMPACT TEST SFBC PA 201-94	SATISFACTORY	----------
CYCLIC WIND PRESSURE TEST SFBC PA 203-94 POSITIVE (671 cycles)	+85.8 PSF	+66.0 PSF
CYCLIC WIND PRESSURE TEST SFBC PA 203-94 NEGATIVE (671 cycles)	-85.8 PSF	-66.0 PSF
Design Pressure Rating (Positive)		**+66.0 PSF**
Design Pressure Rating (Negative)		**-66.0 PSF**

Manuel Perez, P.E. Product Control Examiner
Product Control Division

PREMDOR (ENTERGY WOOD EDGE) STEEL DOOR IN PREMDOR'S ADJUSTABLE STEEL FRAME (INSWING)

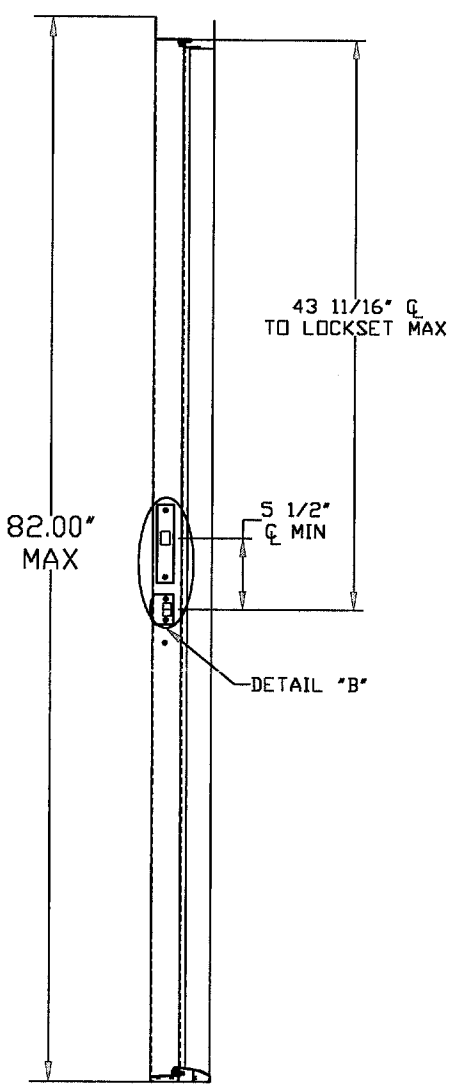

STRIKE LOCATIONS

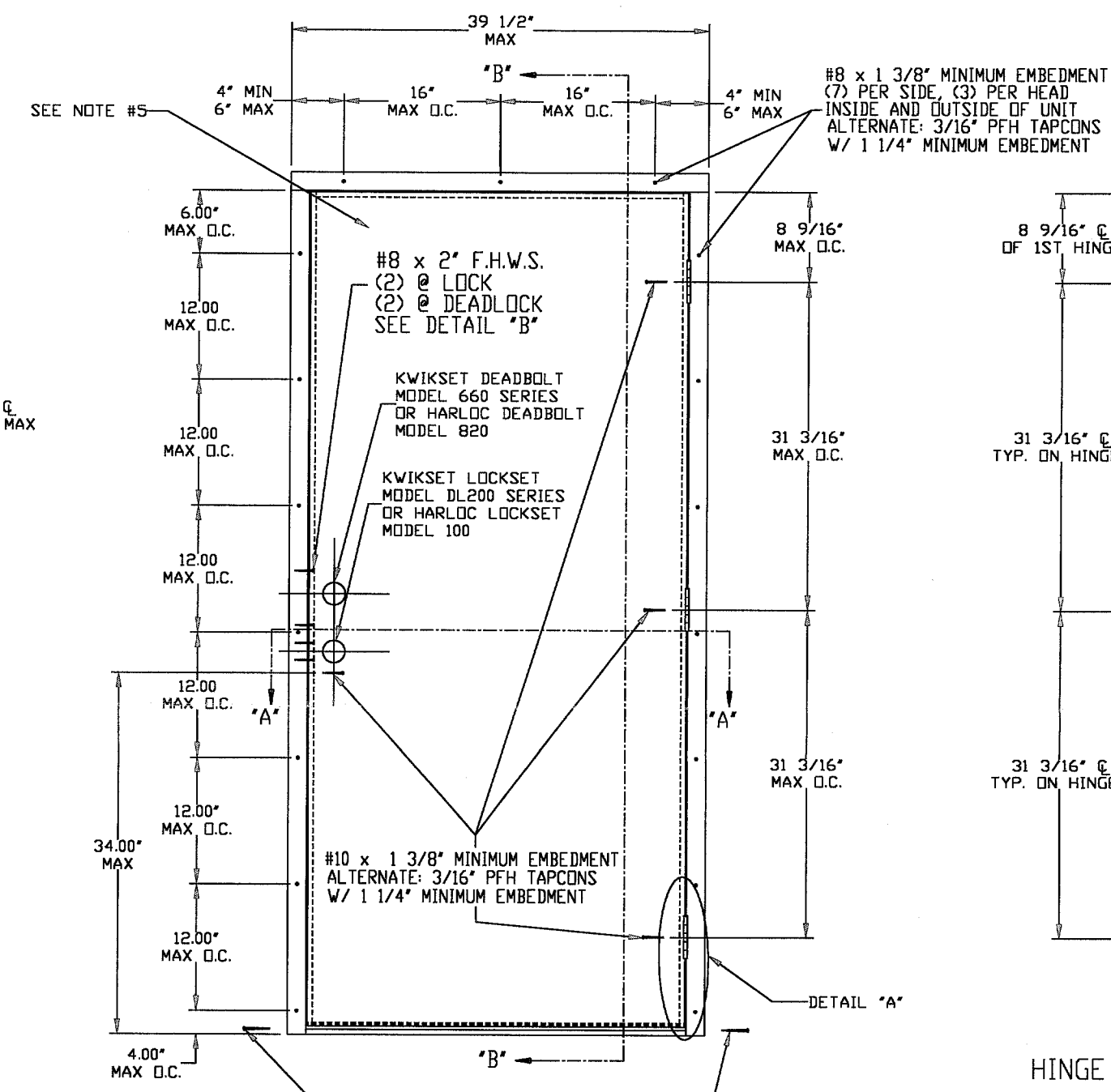

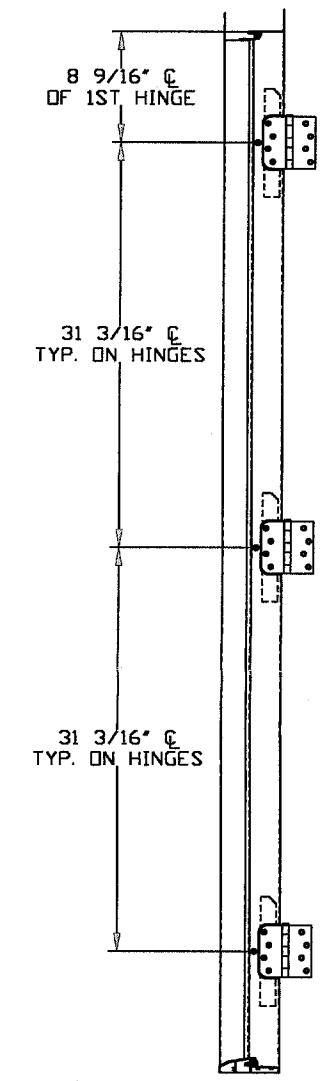

HINGE LOCATIONS

NOTES:

1.) WOOD BUCKS BY OTHERS. MUST BE ANCHORED PROPERLY TO TRANSFER LOADS TO THE STRUCTURE.
2.) THE PRECEDING DRAWINGS ARE INTENDED TO QUALIFY THE FOLLOWING INSTALLATIONS.

A. WOOD FRAME CONSTRUCTION WHERE DOOR SYSTEM IS ANCHORED TO A MINIMUM TWO BY WOOD OPENING.

B. MASONRY OR CONCRETE CONSTRUCTION WHERE DOOR SYSTEM IS ANCHORED TO A MINIMUM TWO BY STRUCTURAL WOOD BUCK.

C. MASONRY OR CONCRETE CONSTRUCTION WHERE DOOR SYSTEM IS ANCHORED DIRECTLY TO CONCRETE OR MASONRY WITH OR WITHOUT A NON-STRUCTURAL ONE BY WOOD BUCK.

3. ANCHORING SCREWS SPECIFIED AS #8 OR #10 F.H.W.S. W/MINIMUM 1 3/8" EMBEDMENT INTO WOOD SUBSTRATE OR 3/16" PFH TAPCONS WITH 1 1/4" MINIMUM EMBEDMENT INTO MASONRY.
4. THE HEAD/JAMB CORNERS ARE OF DOUBLE COPED CONSTRUCTION. THE JAMB/SILL CORNERS ARE OF BUTT-TYPE CONSTRUCTION.
5. DOORS SHALL BE PRE-PAINTED WITH A WATER-BASED EPOXY RUST INHIBITIVE PRIMER PAINT WITH A DRY FILM THICKNESS OF 0.8 TO 1.2 MIL.
6. FRAMES SHALL BE PRE-PAINTED WITH AN ACRYLIC LATEX WATER-BASED/ WATER-REDUCIBLE WHITE PRIMER WITH A DRY FILM THICKNESS OF 0.8 TO 1.2 MIL.

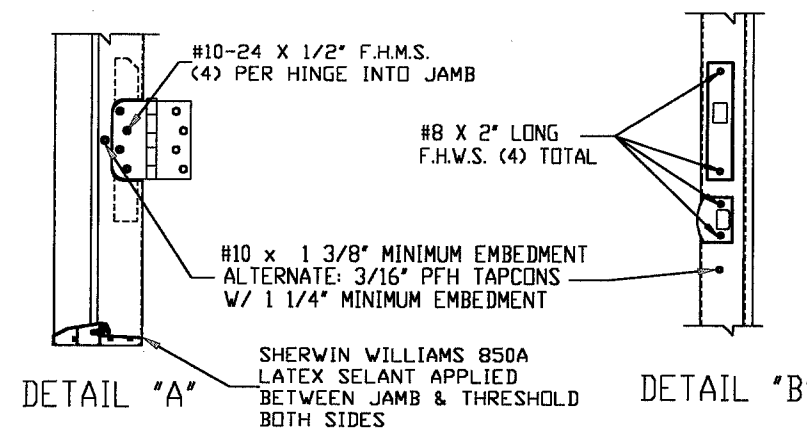

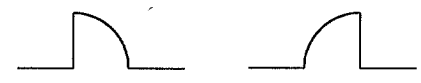

APPROVED AS COMPLYING WITH THE SOUTH FLORIDA BUILDING CODE
DATE APR 19 2001
BY Manuel Perez
PRODUCT CONTROL DIVISION
BUILDING CODE COMPLIANCE OFFICE
ACCEPTANCE NO. 01-0313.03

DESIGN PRESSURE RATINGS		
	WHERE WATER INFILTRATION REQUIREMENT IS NEEDED *	WHERE WATER INFILTRATION REQUIREMENT IS NOT NEEDED
Positive	NOT APPROVED *	+66.0 psf
Negative	NOT APPROVED *	-66.0 psf

* UNITS SHALL BE INSTALLED ONLY AT LOCATIONS PROTECTED BY A CANOPY OR OVERHANG SUCH THAT THE ANGLE BETWEEN THE EDGE OF CANOPY OR OVERHANG TO SILL IS LESS THAN 45 DEGREES. UNLESS UNIT IS INSTALLED IN NON-HABITABLE AREAS WHERE THE UNIT AND THE AREA ARE DESIGNED TO ACCEPT WATER INFILTRATION.

LTR.	REVISIONS	DATE	BY
C	DADE REVISIONS	1/20/01	JD
B	DADE COUNTY MODIFICATIONS	1/1/01	JD
A	ADDED SHEET 4 & REVISED DRAWING	9-30-98	RS

LIMITS: UNLESS NOTED, FRAC. : DEC. : ANG. :
EXTRUSIONS: UNLESS NOTED, STD. COM'L. TOL'S.
ENGINEER:
DR. BY R.S. DATE 6-25-97
PART NAME: ENTERGY WE STEEL DOOR IN ADJUSTABLE STEEL FRAME
MAT'L: SCALE:

PREMDOR ENTRY SYSTEMS
911 E. JEFFERSON
PITTSBURG, KS. 66762

31-1006-EW-I
SHEET 1 OF 4

REVISION LETTER C

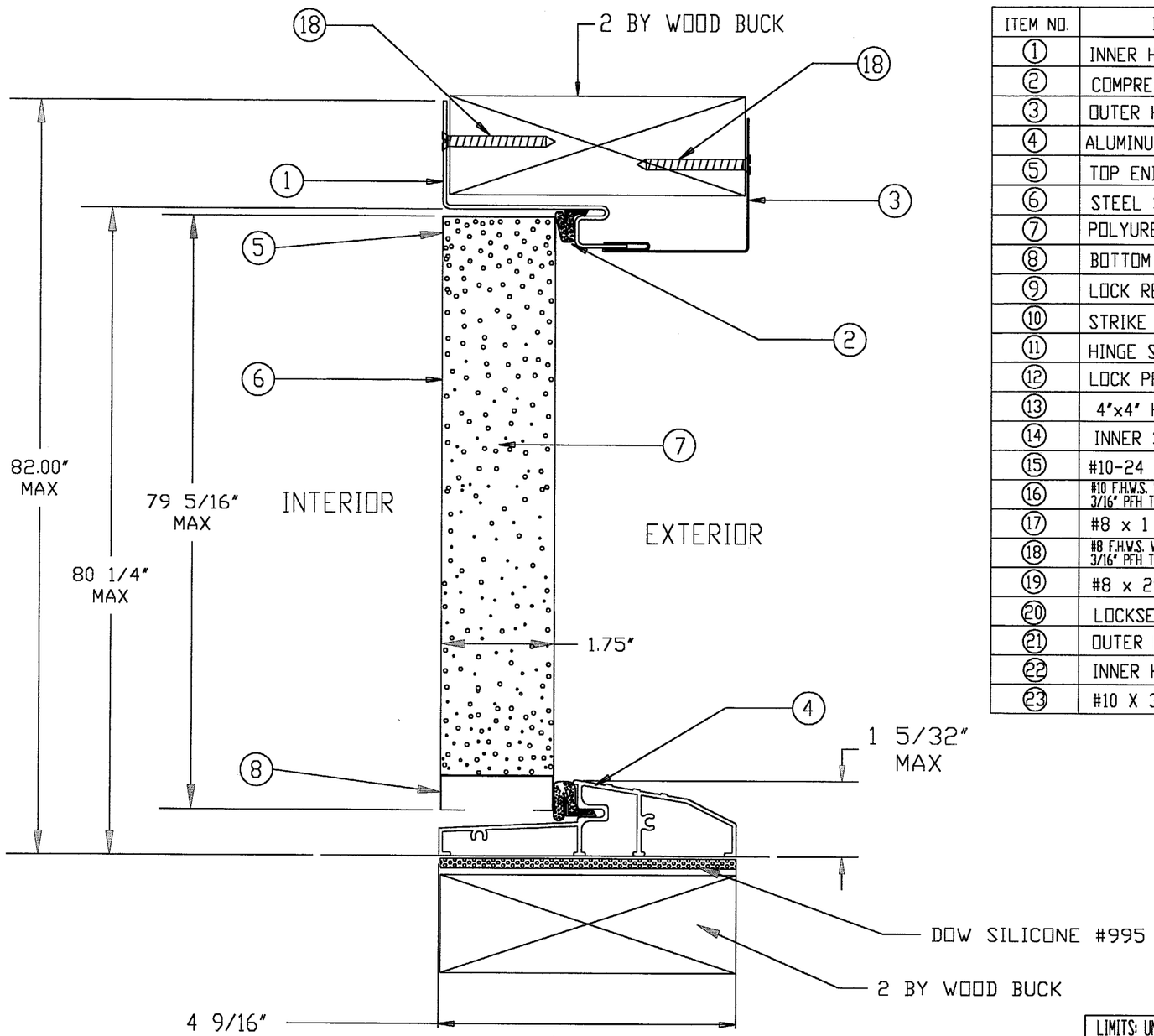

SECTION B-B

INSWING

MATERIALS LIST

ITEM NO.	DESCRIPTION	PART NUMBER	COMMENTS
1	INNER HEAD JAMB	EW-15	PREMDOR BRAND ADJ. STEEL FRAME, 18 GA. STEEL
2	COMPRESSION WEATHERSTRIP	EW-11	LOCKSCREEN BRAND LOXSEAL 9650 (BRONZE)
3	OUTER HEAD JAMB	EW-16	PREMDOR BRAND ADJ. STEEL FRAME, 24 GA. STEEL
4	ALUMINUM-BUMPER THRESHOLD	EW-10	PREMDOR BRAND OR EQUIVALENT - 1 5/32" x 4 9/16"
5	TOP END RAIL	EW-05	PREMDOR BRAND - 1 11/16" - 20 GA STEEL
6	STEEL SKIN	EW-04	26 ga. (.017 +.004 -.000) MIN. YIELD STRENGTH 25,000 PSI MIN. THICKNESS PER TENSILE TEST REPORT IS .021"
7	POLYURETHANE FOAM CORE	BASF FOAM - DENSITY 2.0 TO 2.5 lbs./ft^3	
8	BOTTOM END RAIL	EW-06	PREMDOR BRAND - 1 11/16" - 20 GA STEEL
9	LOCK REINFORCEMENT RING	EW-18	PREMDOR BRAND - 24 GA STEEL "C" RING
10	STRIKE STILE	EW-07	PREMDOR BRAND - 15/16" X 1 11/16" MTL. TO BE PINE OR EQUIVALENT
11	HINGE STILE	EW-08	PREMDOR BRAND - 15/16" X 1 11/16" MTL. TO BE PINE OR EQUIVALENT
12	LOCK PREP FILLER PLATE	EW-09	PREMDOR BRAND - .050" THICK- MTL. TO BE POLYETHYLENE
13	4"x4" HINGE	EW-12	HAGER BRAND HINGE OR EQUIVALENT - .097 THICK (STEEL)
14	INNER STRIKE JAMB	EW-13	PREMDOR BRAND ADJ. STEEL FRAME, 18 GA. STEEL
15	#10-24 x 1/2" F.H.M.S.		(4) SCREWS PER HINGE INTO JAMB
16	#10 F.H.W.S. W/MINIMUM 1 3/8 EMBEDMENT OR 3/16" PFH TAPCONS W/MINIMUM 1 1/4" EMBEDMENT		(1) BEHIND EACH HINGE (1) BELOW LOCKSET STRIKE PLATE
17	#8 x 1 1/2" F.H.W.S.		(2) PER SIDE - FROM JAMBS INTO THRESHOLD
18	#8 F.H.W.S. W/MINIMUM 1 3/8 EMBEDMENT OR 3/16" PFH TAPCONS W/MINIMUM 1 1/4" EMBEDMENT		(3) PER HEADER - BOTH INSIDE AND OUTSIDE (7) PER HINGE & STRIKE SIDE - BOTH INSIDE AND OUTSIDE ON JAMBS
19	#8 x 2" F.H.W.S.		(2) AT EACH STRIKE PLATE, (4) TOTAL
20	LOCKSET		KWIKSET BRAND 200 LOCK OR HARLOC BRAND 100 LOCK
21	OUTER FRAME	EW-17	PREMDOR BRAND ADJ. STEEL FRAME, 24 GA. STEEL
22	INNER HINGE JAMB	EW-14	PREMDOR BRAND ADJ. STEEL FRAME, 18 GA. STEEL
23	#10 X 3/4" F.H.W.S.		(4) PER HINGE INTO DOOR

APPROVED AS COMPLYING WITH THE SOUTH FLORIDA BUILDING CODE
DATE APR 19 2001
BY Manuel Perez
PRODUCT CONTROL DIVISION
BUILDING CODE COMPLIANCE OFFICE
ACCEPTANCE NO. 01-0313.03

LIMITS: UNLESS NOTED, FRAC. ± DEC. ± ANG. ±
EXTRUSIONS: UNLESS NOTED, STD. COM'L. TOL'S.

LTR.	REVISIONS	DATE	BY
B	DADE COUNTY MODIFICATIONS	12/22/00	JD
A		11-25-97	R.S.

ENGINEER:

PART NAME: ENTERGY WE STEEL DOOR/ADJUSTABLE STEEL FRAME(B-B)

DR. BY R.S. DATE 6-24-97 MAT'L: SCALE:

PREMDOR ENTRY SYSTEMS
911 E. JEFFERSON
PITTSBURG, KS. 66762

31-1006-EW-I
SHEET 2 OF 4

REVISION LETTER B

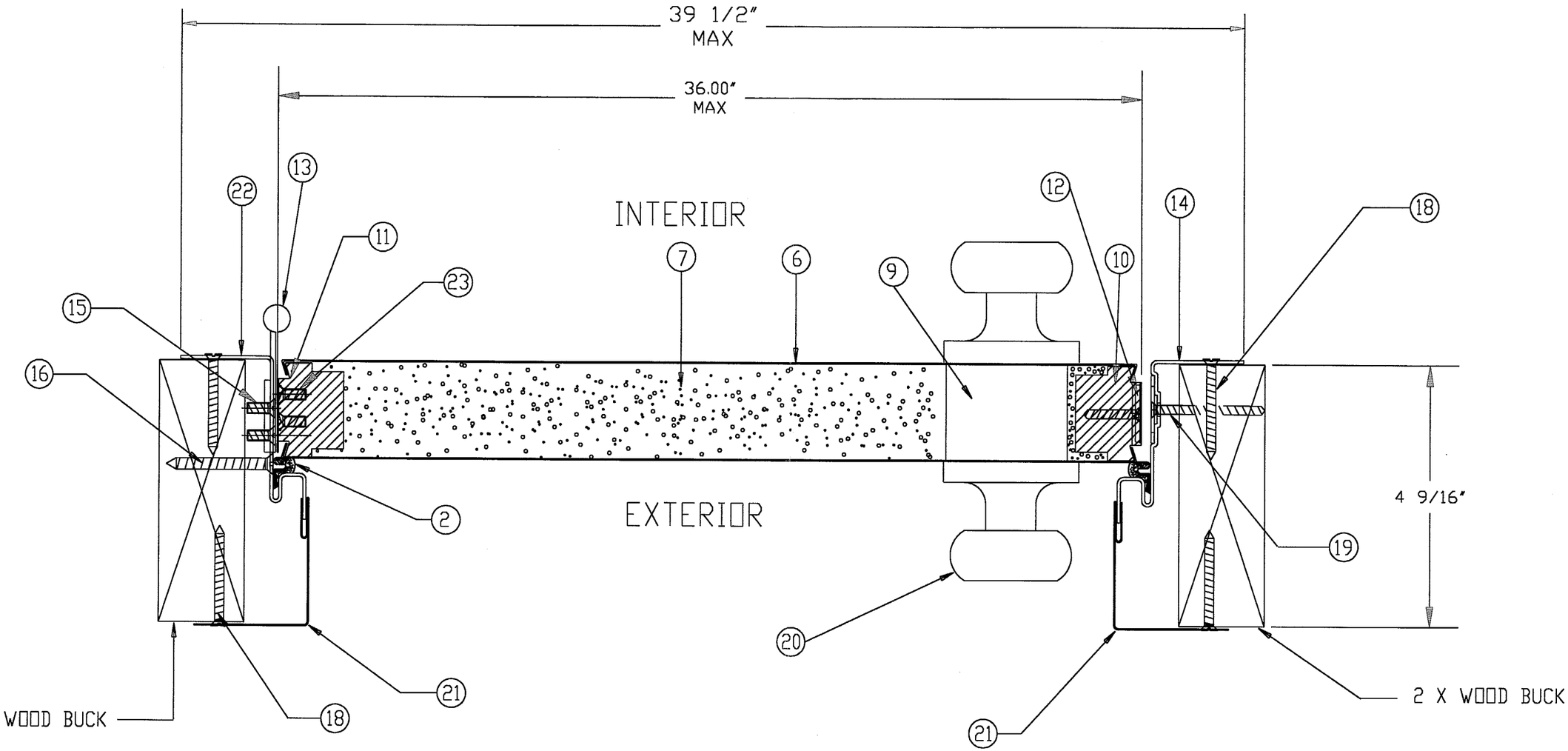

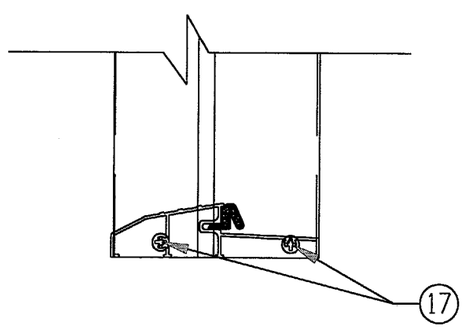

THRESHOLD/JAMB SCREW DETAIL

SECTION A-A
INSWING

APPROVED AS COMPLYING WITH THE
SOUTH FLORIDA BUILDING CODE
DATE APR 19 2001
BY Manuel Perez
PRODUCT CONTROL DIVISION
BUILDING CODE COMPLIANCE OFFICE
ACCEPTANCE NO. 01-0313.03

LIMITS: UNLESS NOTED, FRAC. ± DEC. ± ANG. ±	B	DADE COUNTY MODIFICATIONS	12/17/00	JD
EXTRUSIONS: UNLESS NOTED, STD. COM'L. TOL'S.	A	ADDED PAGE 4 (DOOR OPTIONS)	9-30-98	RS
ENGINEER:	LTR.	REVISIONS	DATE	BY
	PART NAME: ENTERGY WE STEEL DOOR/ADJUSTABLE STEEL FRAME (A-A)			
DR. BY R.S. DATE 6-25-97	MAT'L:	SCALE:		

PREMDOR ENTRY SYSTEMS
911 E. JEFFERSON
PITTSBURG, KS. 66762

A

31-1006-EW-I
SHEET 3 OF 4

REVISION LETTER B

OTHER DOOR SLAB STYLES (FLUSH/EMBOSSED)

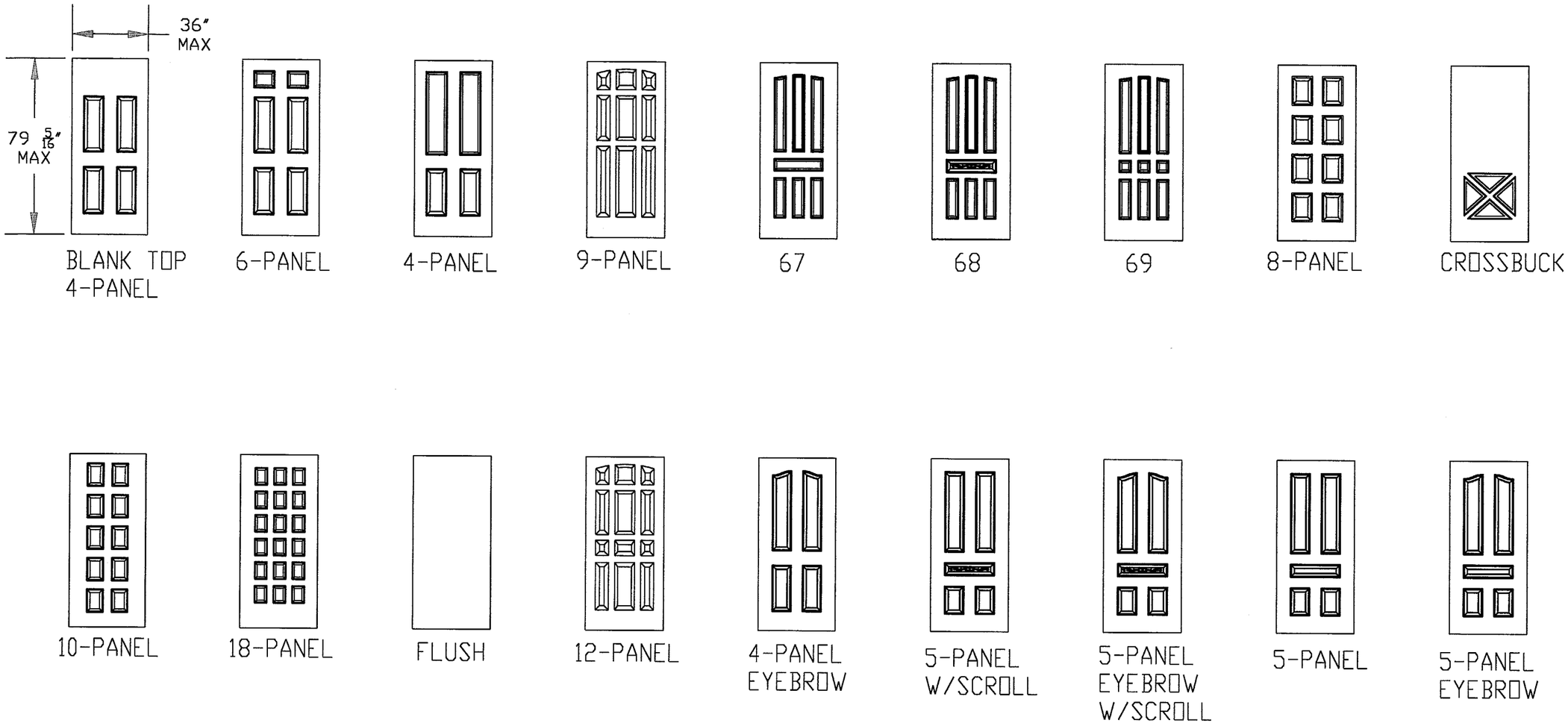

APPROVED AS COMPLYING WITH THE
SOUTH FLORIDA BUILDING CODE
DATE APR 19 2001
BY Suzanne Perez
PRODUCT CONTROL DIVISION
BUILDING CODE COMPLIANCE OFFICE
ACCEPTANCE NO. 01-0313.03

LIMITS: UNLESS NOTED, FRAC. ± DEC. ± ANG. ± EXTRUSIONS: UNLESS NOTED, STD. COM'L. TOL'S.			
ENGINEER:	LTR.	REVISIONS	DATE / BY
	PART NAME: ENTERGY WE STEEL EDGE DOOR		
DR. BY J.D. / DATE 12/28/00	MAT'L:	SCALE:	
PREMDOR ENTRY SYSTEMS 911 E. JEFFERSON PITTSBURG, KS. 66762	31-1006-EW-I SHEET 4 OF 4		
	REVISION LETTER		