MIAMI-DADE

**MIAMI-DADE** COUNTY, FLORIDA
METRO-DADE FLAGLER BUILDING

**BUILDING CODE COMPLIANCE OFFICE**
METRO-DADE FLAGLER BUILDING
140 WEST FLAGLER STREET, SUITE 1603
MIAMI, FLORIDA 33130-1563
(305) 375-2901 FAX (305) 375-2908

**CONTRACTOR LICENSING SECTION**
(305) 375-2527 FAX (305) 375-2558

**CONTRACTOR ENFORCEMENT DIVISION**
(305) 375-2966 FAX (305) 375-2908

**PRODUCT CONTROL DIVISION**
(305) 375-2902 FAX (305) 372-6339

# PRODUCT CONTROL NOTICE OF ACCEPTANCE

**Caradco Windows & Doors**
**201 Evans Road**
**Rantoul ,IL 61866**

Your application for Notice of Acceptance (NOA) of:
**Series "Car Clad" Aluminum Clad Wood Awning Window - Impact Resistant**
under Chapter 8 of the Code of Miami-Dade County governing the use of Alternate Materials and Types of Construction, and completely described herein, has been recommended for acceptance by the Miami-Dade County Building Code Compliance Office (BCCO) under the conditions specified herein.

This NOA shall not be valid after the expiration date stated below. BCCO reserves the right to secure this product or material at any time from a jobsite or manufacturer's plant for quality control testing. If this product or material fails to perform in the approved manner, BCCO may revoke, modify, or suspend the use of such product or material immediately. BCCO reserves the right to revoke this approval, if it is determined by BCCO that this product or material fails to meet the requirements of the South Florida Building Code.

The expense of such testing will be incurred by the manufacturer.

**ACCEPTANCE NO.: 01-0502.12**
**EXPIRES: 05/07/2006**

Raul Rodriguez
Chief Product Control Division

**THIS IS THE COVERSHEET, SEE ADDITIONAL PAGES FOR SPECIFIC AND GENERAL CONDITIONS**
**BUILDING CODE & PRODUCT REVIEW COMMITTEE**

This application for Product Approval has been reviewed by the BCCO and approved by the Building Code and Product Review Committee to be used in Miami-Dade County, Florida under the conditions set forth above.

Francisco J. Quintana, R.A.
Director
Miami-Dade County
Building Code Compliance Office

**APPROVED: 08/02/2001**

**Caradco Windows & Doors**

**ACCEPTANCE No.: 01-0502.12**

**APPROVED : AUG 0 2 2001**

**EXPIRES : May 07, 2006**

## NOTICE OF ACCEPTANCE: SPECIFIC CONDITIONS

**1. SCOPE**

**1.1** This **renews** the Notice of Acceptance No. 98-1110.14, which was issued on 04/01/99. It approves an aluminum clad wood awning window, as described in Section 2 of this Notice of Acceptance, designed to comply with the South Florida Building Code (SFBC), 1994 Edition for Miami-Dade County, for the locations where the pressure requirements, as determined by SFBC Chapter 23, do not exceed the Design Pressure Rating values indicated in the approved drawings.

**2. PRODUCT DESCRIPTION**

**2.1** The **Series "Car Clad" Aluminum Clad Wood Awning Window - Impact Resistant** and its components shall be constructed in strict compliance with the following documents: Drawing No **W98-78**, Sheets 1 through 5 of 5, titled "Car Clad Wood Awning Window," prepared by Al-Farooq Corporation, dated 10/10/98, with revision A dated 05/21/01, signed and sealed by Humayoun Farooq, P.E., bearing the Miami-Dade County Product Control approval stamp with the Notice of Acceptance number and approval date by the Miami-Dade County Product Control Division. These documents shall hereinafter be referred to as the approved drawings.

**3. LIMITATIONS**

**3.1** This approval applies to single unit applications, side-by-side and top-and-bottom installations, as shown in approved drawings.

**4. INSTALLATION**

**4.1** The aluminum clad wood awning window and its components shall be installed in strict compliance with the approved drawings.

**4.2** Hurricane protection system (shutters): to determine whether the installation requires a hurricane protection system or not, see corresponding "Design Load Capacity" table in approved drawing.

**5. LABELING**

**5.1** Each unit shall bear a permanent label with the manufacturer's name or logo, city, state and following statement: "Miami-Dade County Product Control Approved".

**6. BUILDING PERMIT REQUIREMENTS**

**6.1** Application for building permit shall be accompanied by copies of the following:

- **6.1.1** This Notice of Acceptance
- **6.1.2** Duplicate copies of the approved drawings, as identified in Section 2 of this Notice of Acceptance, clearly marked to show the components selected for the proposed installation.
- **6.1.3** Any other documents required by the Building Official or the South Florida Building Code (SFBC) in order to properly evaluate the installation of this system.

Manuel Perez, P.E. Product Control Examiner
Product Control Division

**Caradco Windows & Doors**

**ACCEPTANCE No.:** **01-0502.12**

**APPROVED** : AUG 0 2 2001

**EXPIRES** : **May 07, 2006**

## NOTICE OF ACCEPTANCE: STANDARD CONDITIONS

1. Renewal of this Acceptance (approval) shall be considered after a renewal application has been filed and the original submitted documentation, including test supporting data, engineering documents, are no older than eight (8) years.

2. Any and all approved products shall be permanently labeled with the manufacturer's name, city, state, and the following statement: "Miami-Dade County Product Control Approved", or as specifically stated in the specific conditions of this Acceptance.

3. Renewals of Acceptance will not be considered if:
   **a)** There has been a change in the South Florida Building Code affecting the evaluation of this product and the product is not in compliance with the code changes;
   **b)** The product is no longer the same product (identical) as the one originally approved;
   **c)** If the Acceptance holder has not complied with all the requirements of this acceptance, including the correct installation of the product;
   **d)** The engineer who originally prepared, signed and sealed the required documentation initially submitted is no longer practicing the engineering profession.

4. Any revision or change in the materials, use, and/or manufacture of the product or process shall automatically be cause for termination of this Acceptance, unless prior written approval has been requested (through the filing of a revision application with appropriate fee) and granted by this office.

5. Any of the following shall also be grounds for removal of this Acceptance:
   **a)** Unsatisfactory performance of this product or process.
   **b)** Misuse of this Acceptance as an endorsement of any product, for sales, advertising or any other purpose.

6. The Notice of Acceptance number preceded by the words Miami-Dade County, Florida, and followed by the expiration date may be displayed in advertising literature. If any portion of the Notice of Acceptance is displayed, then it shall be done in its entirety.

7. A copy of this Acceptance as well as approved drawings and other documents, where it applies, shall be provided to the user by the manufacturer or its distributors and shall be available for inspection at the job site at all time. The engineer need not reseal the copies.

8. Failure to comply with any section of this Acceptance shall be cause for termination and removal of Acceptance.

9. This Notice of Acceptance consists of pages 1, 2 and this last page 3.

**END OF THIS ACCEPTANCE**

Manuel Perez

Manuel Perez, P.E. Product Control Examiner
Product Control Division

## DESIGN LOAD CAPACITY – PSF

| WINDOW DIMENSIONS | | NON-IMPACT WINDOWS DADE COUNTY APPD. SHUTTERS REQD. | | | | IMPACT RESISTANT WINDOWS SHUTTERS NOT REQUIRED | | | |
|---|---|---|---|---|---|---|---|---|---|
| | | GLASS TYPE 'A' | | GLASS TYPE 'B' | | GLASS TYPE 'C' | | GLASS TYPE 'D' | |
| WIDTH | HEIGHT | EXT. (+) | INT. (–) | EXT. (+) | INT. (–) | EXT. (+) | INT. (–) | EXT. (+) | INT. (–) |
| 24" | 17" | 100.0 | 100.0 | 100.0 | 100.0 | 66.0 | 78.0 | 66.0 | 78.0 |
| 30" | | 100.0 | 100.0 | 100.0 | 100.0 | 66.0 | 78.0 | 66.0 | 78.0 |
| 32" | | 100.0 | 100.0 | 100.0 | 100.0 | 66.0 | 78.0 | 66.0 | 78.0 |
| 36" | | 100.0 | 100.0 | 100.0 | 100.0 | 66.0 | 78.0 | 66.0 | 78.0 |
| 40" | | 100.0 | 100.0 | 100.0 | 100.0 | 66.0 | 78.0 | 66.0 | 78.0 |
| 48" | | 100.0 | 100.0 | 100.0 | 100.0 | 66.0 | 78.0 | 66.0 | 78.0 |
| 24" | 20" | 100.0 | 100.0 | 100.0 | 100.0 | 66.0 | 78.0 | 66.0 | 78.0 |
| 30" | | 100.0 | 100.0 | 100.0 | 100.0 | 66.0 | 78.0 | 66.0 | 78.0 |
| 32" | | 100.0 | 100.0 | 100.0 | 100.0 | 66.0 | 78.0 | 66.0 | 78.0 |
| 36" | | 100.0 | 100.0 | 100.0 | 100.0 | 66.0 | 78.0 | 66.0 | 78.0 |
| 40" | | 100.0 | 100.0 | 100.0 | 100.0 | 66.0 | 78.0 | 66.0 | 78.0 |
| 48" | | 90.1 | 94.5 | 90.1 | 100.0 | 66.0 | 78.0 | 66.0 | 78.0 |
| 24" | 24" | 100.0 | 100.0 | 100.0 | 100.0 | 66.0 | 78.0 | 66.0 | 78.0 |
| 30" | | 100.0 | 100.0 | 100.0 | 100.0 | 66.0 | 78.0 | 66.0 | 78.0 |
| 32" | | 100.0 | 100.0 | 100.0 | 100.0 | 66.0 | 78.0 | 66.0 | 78.0 |
| 36" | | 100.0 | 100.0 | 100.0 | 100.0 | 66.0 | 78.0 | 66.0 | 78.0 |
| 40" | | 94.9 | 94.9 | 100.0 | 100.0 | 66.0 | 78.0 | 66.0 | 78.0 |
| 48" | | 72.4 | 72.4 | 77.6 | 92.3 | 66.0 | 78.0 | 66.0 | 78.0 |
| 24" | 30" | 100.0 | 95.6 | 100.0 | 95.6 | 66.0 | 78.0 | 66.0 | 78.0 |
| 30" | | 100.0 | 100.0 | 100.0 | 100.0 | 66.0 | 78.0 | 66.0 | 78.0 |
| 32" | | 100.0 | 100.0 | 100.0 | 100.0 | 66.0 | 78.0 | 66.0 | 78.0 |
| 36" | | 97.0 | 95.6 | 100.0 | 95.6 | 66.0 | 78.0 | 66.0 | 78.0 |
| 40" | | 85.9 | 85.9 | 100.0 | 94.2 | 66.0 | 78.0 | 66.0 | 78.0 |
| 48" | | 66.0 | 68.9 | 66.0 | 78.5 | 66.0 | 69.2 | 66.0 | 78.0 |

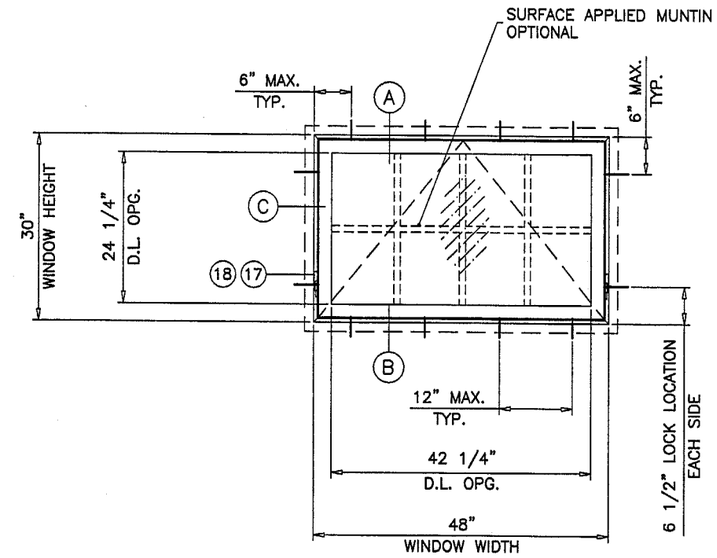


TYPICAL ELEVATION
TESTED UNIT

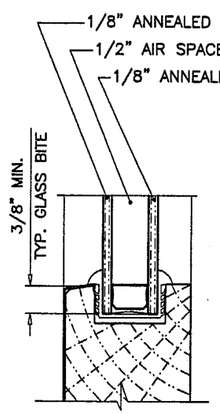


3/4" INSULATED
NON-IMPACT GLASS

GLASS TYPE 'A'

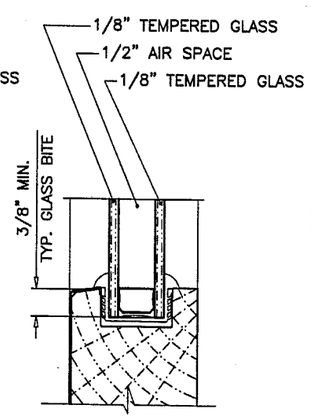


3/4" INSULATED
NON-IMPACT GLASS

GLASS TYPE 'B'

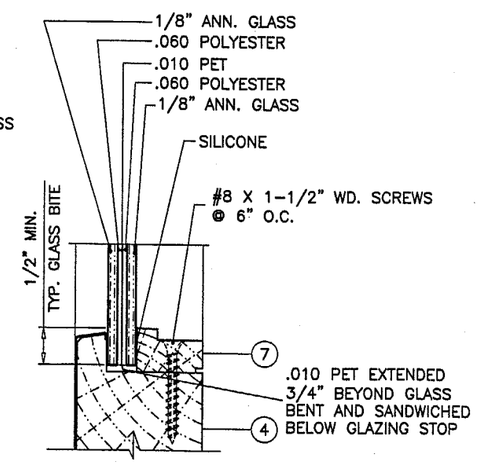


GLASSLAM SAFETY PLUS
IMPACT GLASS

GLASS TYPE 'C'

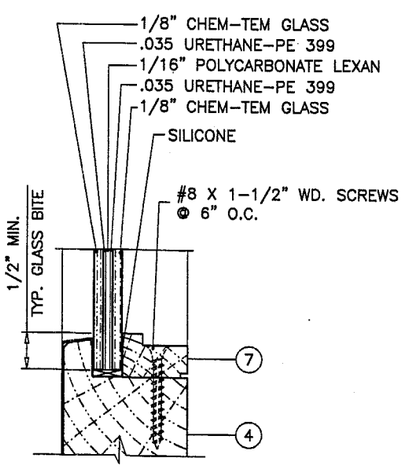


3/8" THICK NOMINAL
IMPACT GLASS
GLOBE AMERADA P380 WIND-PANE

GLASS TYPE 'D'

GLASS OPTIONS

## NOTES

1. THIS STRUCTURE IS DESIGNED AS PER THE SOUTH FLORIDA BUILDING CODE 1994 EDITION FOR DADE COUNTY. ALSO FOR WIND LOADS AS PER ASCE 7 USING CORRESPONDING LOADS.
2. WOOD BUCKS BY OTHERS, MUST BE ANCHORED PROPERLY TO TRANSFER LOADS TO THE STRUCTURE.
3. ANCHORS SHALL BE AS LISTED, SPACED AS SHOWN ON DETAILS. ANCHOR EMBEDMENT TO BASE MATERIAL SHALL BE BEYOND WALL DRESSING OR STUCCO.
4. ANCHORING OR LOADING CONDITION NOT SHOWN IN THESE DETAILS ARE NOT PART OF THIS APPROVAL.

Engr: DR. HUMAYOUN FAROOQ
STRUCTURES
FLA. PE # 16557

AUG 0 1 2001

APPROVED AS COMPLYING WITH THE
SOUTH FLORIDA BUILDING CODE
DATE AUG 0 2 2001
BY Manuel Perez
PRODUCT CONTROL DIVISION
BUILDING CODE COMPLIANCE OFFICE
ACCEPTANCE NO. 01-0502.12


AL-FAROOQ CORPORATION
ENGINEERS, PLANNERS & PRODUCT DESIGN
1235 SW 87 AVE
MIAMI, FLORIDA 33174
TEL. (305) 264-8100 FAX. (305) 262-6978
COMP-ANL\W98-78CO


'CAR CLAD' WOOD AWNING WINDOW

**CARADCO** WOOD WINDOWS & PATIO DOORS
201 EVANS ROAD
RANTOUL, ILLINOIS 61866
TEL (217) 893-4444 FAX (217) 893-0921

| revisions: | | | |
|---|---|---|---|
| no | date | by | description |
| A | 05.21.01 | | CHARTS UPDATED TO ASTM-E1300 |

date: 10-10-98
scale: 1/2" = 1"
dr. by: HAMID
chk. by:

drawing no.
W98-78

WOOD BUCKS NOT BY CARADCO, MUST SUSTAIN LOADS IMPOSED BY GLAZING SYSTEM AND TRANSFER THEM TO THE BUILDING STRUCTURE.

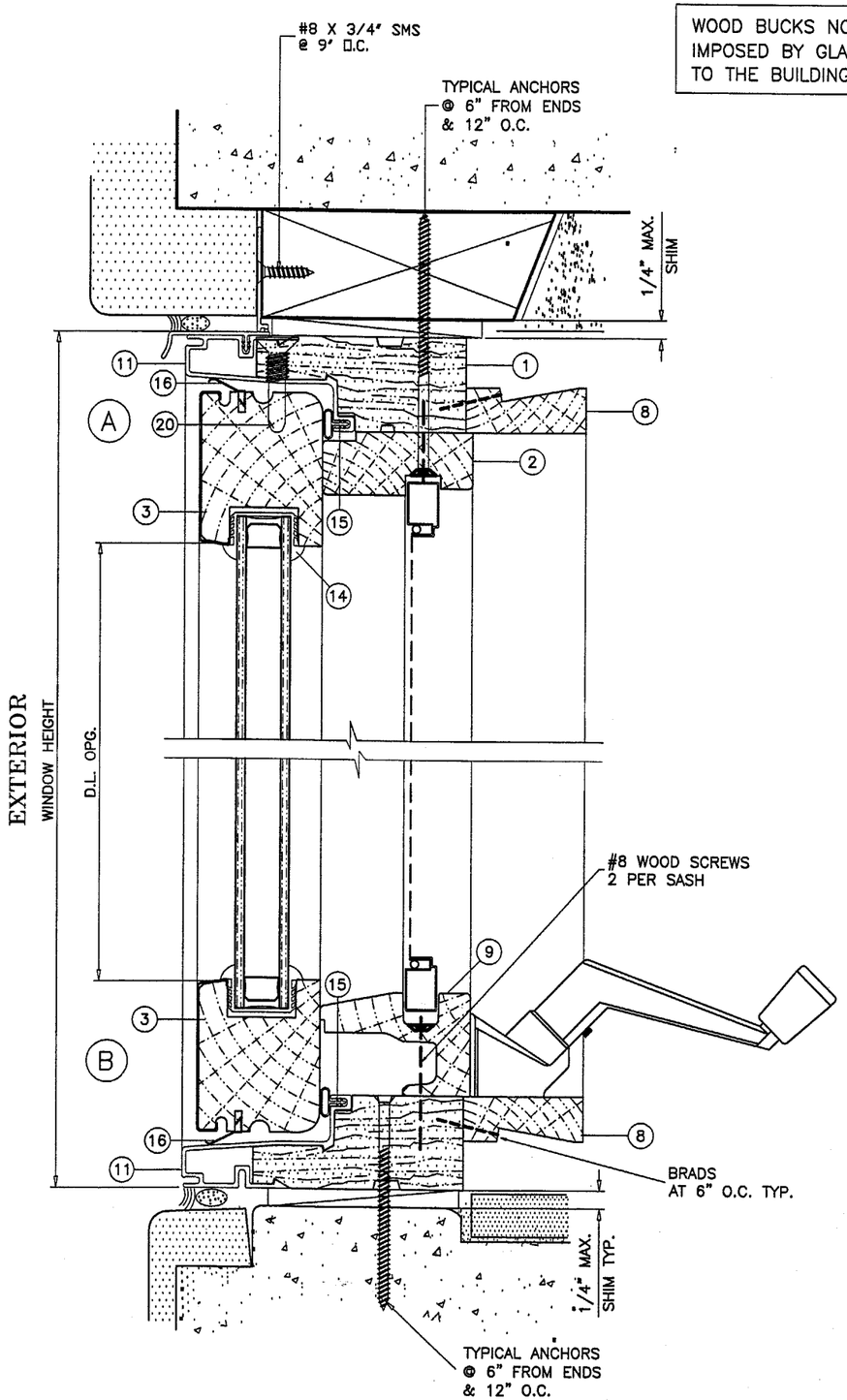


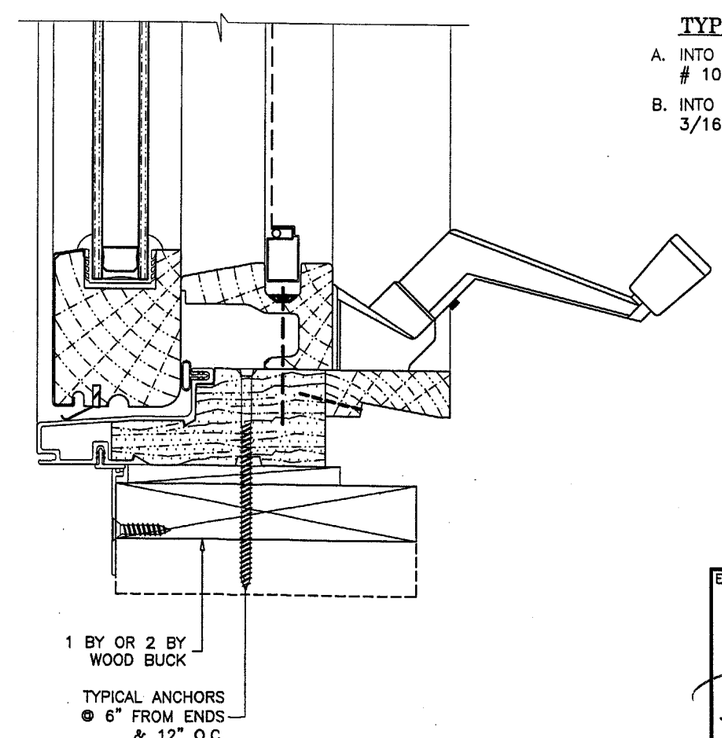


**TYPICAL ANCHORS:**

A. INTO 2BY WOOD BUCKS OR WOOD STRUCTURE
# 10 SMS WITH 1-3/8" MIN. PENETRATION INTO WOOD

B. INTO 1BY WOOD BUCKS OR INTO MASONRY
3/16" DIA. TAPCONS WITH 1-1/4" MIN. EMBED INTO MASONRY

Engr: DR. HUMAYOUN FAROOQ
STRUCTURES
FLA. PE # 16557

AUG 0 1 2001

APPROVED AS COMPLYING WITH THE SOUTH FLORIDA BUILDING CODE
DATE AUG 0 2 2001
BY Manuel Perez
PRODUCT CONTROL DIVISION
BUILDING CODE COMPLIANCE OFFICE
ACCEPTANCE NO. 01-0502.12


AL-FAROOQ CORPORATION
ENGINEERS, PLANNERS & PRODUCT DESIGN
1235 SW 87 AVE
MIAMI, FLORIDA 33174
TEL. (305) 264-8100 FAX. (305) 262-6978
COMP-ANL\W98-78CO


'CAR CLAD' WOOD AWNING WINDOW


CARADCO WOOD WINDOWS & PATIO DOORS
201 EVANS ROAD
RANTOUL, ILLINOIS 61866
TEL. (217) 893-4444 FAX (217) 893-0921


revisions:

| no | date | by | description |
|---|---|---|---|
| A | 05.21.01 | | CHARTS UPDATED TO ASTM-E1300 |

date: 10-10-98
scale: 1/2" = 1"
dr. by: HAMID
chk. by:

drawing no.
W98-78

| ITEM # | REQD. | PART NO. | DESCRIPTION | MATERIAL | MANF./SUPPLIER/REMARKS |
|---|---|---|---|---|---|
| 1 | AS REQD. | CA-03/04 | HEAD/SILL/JAMB | TIMBERSTRAND | CARADCO |
| 2 | 1 | CA-09 | HEAD STOP | WOOD | CARADCO |
| 3 | 2/SASH | – | SASH RAIL (INSUL. GLASS) | WOOD | CARADCO |
| 4 | 2/ SASH | CA-14 | SASH RAIL (LAM. GLASS) | WOOD | CARADCO |
| 5 | 2/ SASH | – | SASH STILE (INSUL. GLASS) | WOOD | CARADCO |
| 6 | 2/ SASH | CA-15 | SASH STILE (LAM. GLASS) | WOOD | CARADCO |
| 7 | 4/ SASH | CA-16/17 | GLASS STOP (LAM. GLASS ONLY) | WOOD | CARADCO |
| 8 | 4 | CA-18/19 | X-JAMB | WOOD | CARADCO |
| 9 | 1 | CA-05 | SILL COVER | WOOD | CARADCO |
| 10 | 2/ WINDOW | CA-06/07 | SIDE STOP | WOOD | CARADCO |
| 11 | AS REQD. | P-14 | FRAME NOSING | 6063-T5 | – |
| 12 | 1/MULLION | CA-13 | MULLION CASING | WOOD | CARADCO |
| 13 | 1/ MULLION | PP25 | MULLION CONNECTOR | 6063-T5 | CARADCO |
| 14 | AS REQD. | P52 | 3/4" GLAZING GASKET (INSUL. GLASS ONLY) | VINYL | CARADCO |
| 15 | AS REQD. | S90-078 | BULB WEATHERSTRIP | PVC | AT EACH FRAME MEMBER |
| 16 | AS REQD. | PPO | LEAF WEATHERSTRIP | POLYPROPYLENE | AT EACH SASH MEMBER |
| 17 | 2/ WINDOW | – | METAL CAM-TYPE SWEEP LOCK AT LOCK STILES | STEEL | AT 6-1/2" FROM BOTTOM |
| 18 | 2/ SASH | – | KEEPERS AT LOCK LOCATIONS | STEEL | AT ACTIVE SASH |
| 19 | 1/SASH | – | ROTO-GEAR AWNING OPERATOR SYSTEM | – | AT SILL |
| 20 | 2/ SASH | – | RETAINING PINS AT TOP RAIL | STEEL | AT 20" FROM ENDS |
| 21 | 2/ SASH | – | SERIES 13 2 BAR HINGES | STEEL | TRUTH |

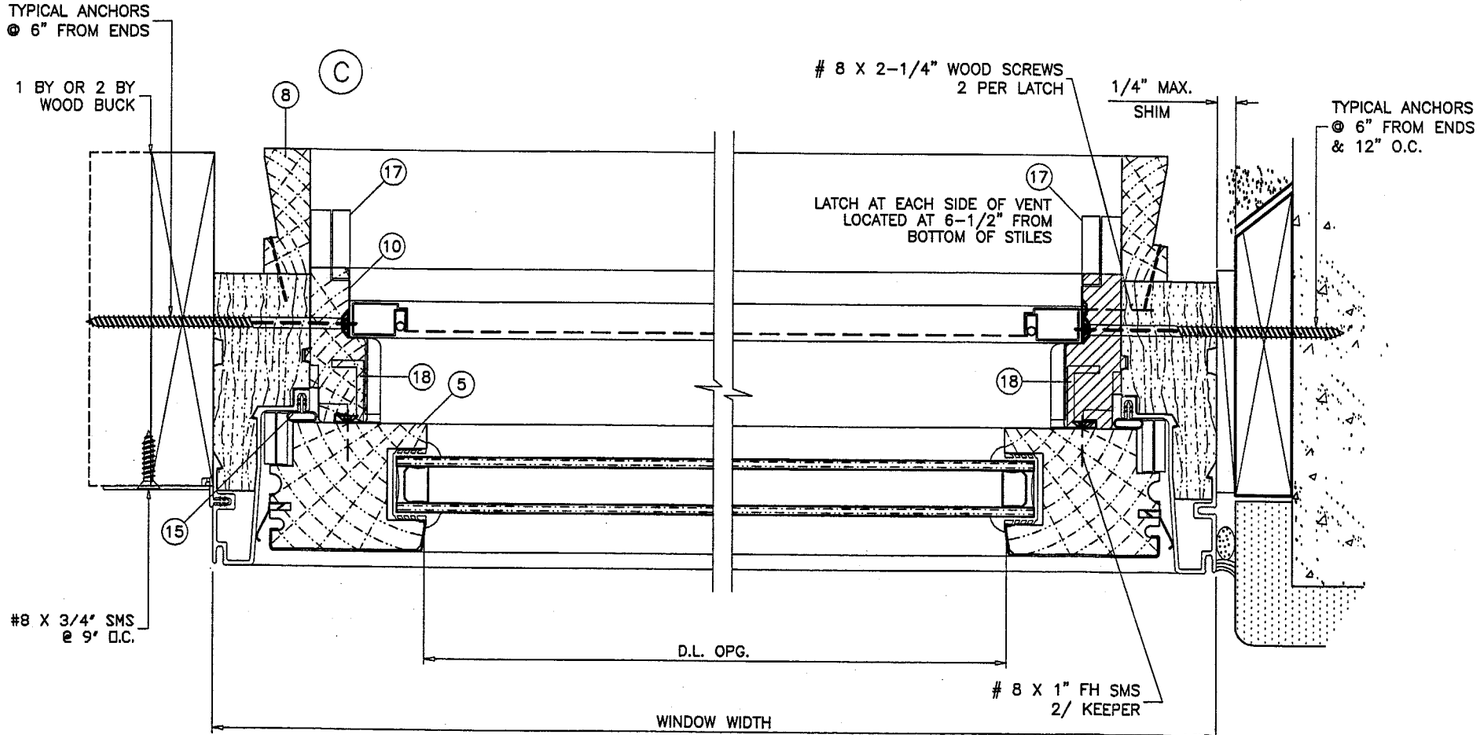


EXTERIOR

Engr: DR. HUMAYOUN FAROOQ
STRUCTURES
FLA. PE # 16557

AUG 0 1 2001

APPROVED AS COMPLYING WITH THE SOUTH FLORIDA BUILDING CODE
DATE AUG 0 2 2001
BY Manuel Perez
PRODUCT CONTROL DIVISION
BUILDING CODE COMPLIANCE OFFICE
ACCEPTANCE NO. 01-0502.12


AL-FAROOQ CORPORATION
ENGINEERS, PLANNERS & PRODUCT DESIGN
1235 SW 87 AVE
MIAMI, FLORIDA 33174
TEL. (305) 264-8100 FAX. (305) 262-6978
COMP-ANL\W98-78CO


'CAR CLAD' WOOD AWNING WINDOW

**CARADCO** WOOD WINDOWS & PATIO DOORS
201 EVANS ROAD
RANTOUL, ILLINOIS 61866
TEL (217) 893-4444 FAX (217) 893-0921

| revisions: | | | |
|---|---|---|---|
| no | date | by | description |

date: 10-10-98
scale: 1/2" = 1"
dr. by: HAMID
chk. by:

drawing no. W98-78

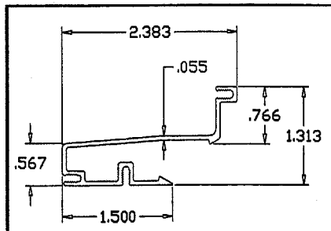


FRAME NOSING

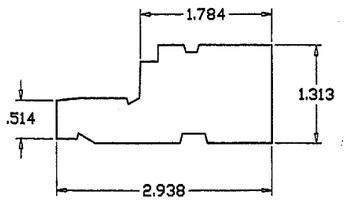


HEAD/SILL/JAMB

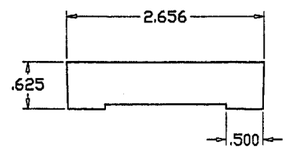


INT. MULLION CASING

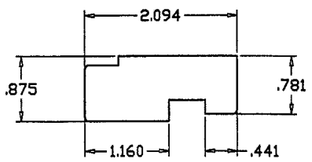


HEAD STOP

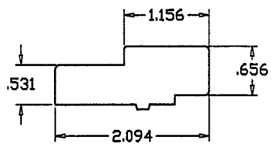


SIDE STOP

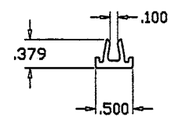


MULLION CONNECTOR

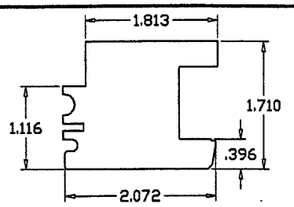


SASH STILE (INSULATED GLASS)

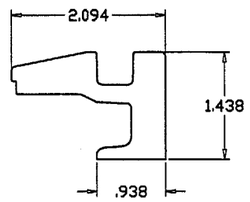


SILL COVER

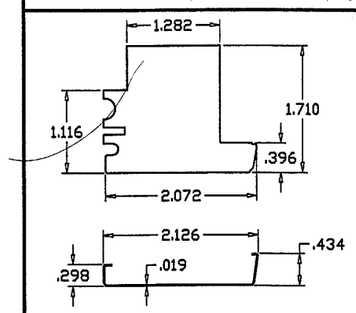


SASH STILE (LAMINATED GLASS)

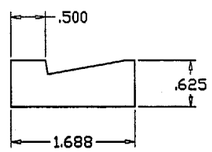


X-JAMB

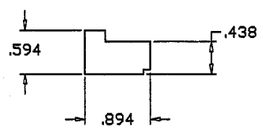


GLASS STOP

SASH AND OTHER WOOD COMPONENTS TO BE WHITE PINE OR PONDEROSA PINE. FRAME MEMBERS TO BE TIMBERSTRAND.

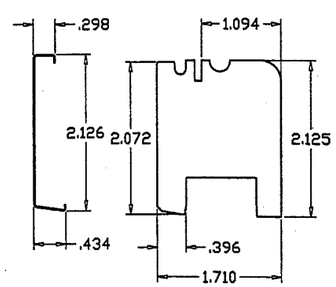


SASH RAIL (INSULATED GLASS)

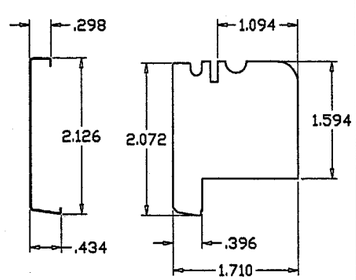


SASH RAIL (LAMINATED GLASS)

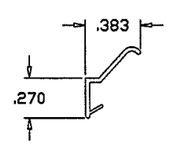


LEAF WEATHERSTRIP

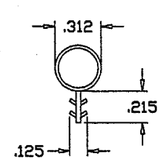


BULB WEATHERSTRIP

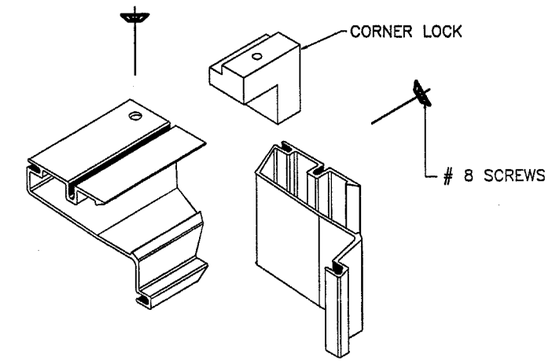


FRAME NOSING CORNER

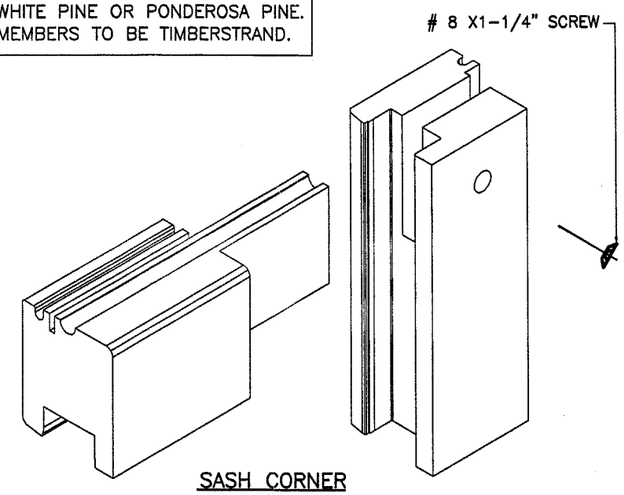


SASH CORNER

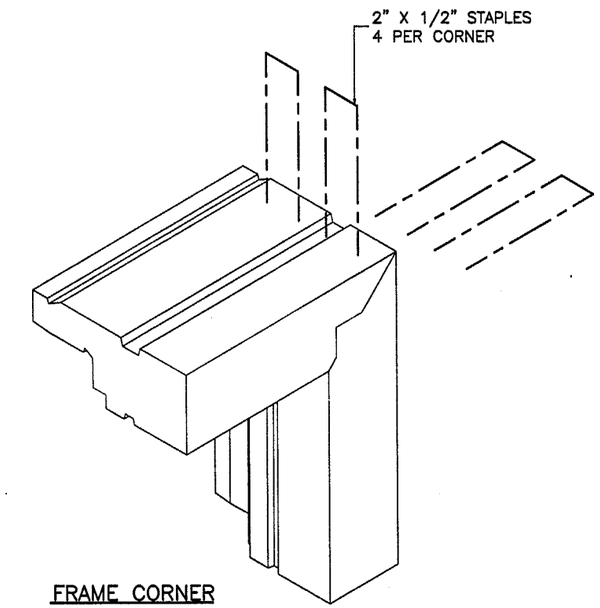


FRAME CORNER

FRAME AND SASH CORNERS SEALED WITH BUTYL TAPE SEALANT. BUTYL CAULK USED IN BETWEEN ALUMINUM/WOOD JOINTS.

Engr: DR. HUMAYOUN FAROOQ
STRUCTURES
FLA. PE # 16557

AUG 0 1 2001

APPROVED AS COMPLYING WITH THE SOUTH FLORIDA BUILDING CODE
DATE AUG 0 2 2001
BY Mamuel Cruz
PRODUCT CONTROL DIVISION
BUILDING CODE COMPLIANCE OFFICE
ACCEPTANCE NO. 01-0502.12


AL-FAROOQ CORPORATION
ENGINEERS, PLANNERS & PRODUCT DESIGN
1235 SW 87 AVE
MIAMI, FLORIDA 33174
TEL. (305) 264-8100 FAX. (305) 262-6978
COMP-ANL\W98-78CO

'CAR CLAD' WOOD AWNING WINDOW
CARADCO WOOD WINDOWS & PATIO DOORS
201 EVANS ROAD
RANTOUL, ILLINOIS 61866
TEL. (217) 893-4444 FAX (217) 893-0921


revisions:

| no | date | by | description |
|---|---|---|---|
| | | | |

date: 10-10-98
scale: 1/2" = 1"
dr. by: HAMID
chk. by:

drawing no. W98-78

**DESIGN LOAD CAPACITY – PSF (SIDE/SIDE OR TOP/BOTTOM WINDOWS)**

AWNING, OPERATING CASEMENT, FIXED CASEMENT OR ANY COMBINATION THEREOF

| WINDOW DIMENSIONS | | NON-IMPACT WINDOWS (SHUTTERS REQUIRED) DSB-INSULATED GLASS | | IMPACT RESISTANT WINDOWS (SHUTTERS NOT REQD.) 3/8" LAMINATED GLASS | |
|---|---|---|---|---|---|
| WIDTH (W) | HEIGHT (H) | EXT. | INT. | EXT. | INT. |
| 15' | 40' | 100.0 | 100.0 | 66.0 | 80.0 |
| 20' | | 100.0 | 100.0 | 66.0 | 80.0 |
| 25' | | 100.0 | 100.0 | 66.0 | 80.0 |
| 30' | | 100.0 | 100.0 | 66.0 | 80.0 |
| 35' | | 100.0 | 100.0 | 66.0 | 80.0 |
| 40' | | 100.0 | 100.0 | 66.0 | 80.0 |
| 45' | | 100.0 | 100.0 | 66.0 | 80.0 |
| 50' | | 100.0 | 100.0 | 66.0 | 80.0 |
| 55' | | 100.0 | 100.0 | 66.0 | 80.0 |
| 15' | 48' | 100.0 | 100.0 | 66.0 | 80.0 |
| 20' | | 100.0 | 100.0 | 66.0 | 80.0 |
| 25' | | 100.0 | 100.0 | 66.0 | 80.0 |
| 30' | | 100.0 | 100.0 | 66.0 | 80.0 |
| 35' | | 100.0 | 100.0 | 66.0 | 80.0 |
| 40' | | 100.0 | 100.0 | 66.0 | 80.0 |
| 45' | | 100.0 | 100.0 | 66.0 | 80.0 |
| 50' | | 100.0 | 100.0 | 66.0 | 80.0 |
| 55' | | 100.0 | 100.0 | 66.0 | 80.0 |
| 15' | 56' | 100.0 | 100.0 | 66.0 | 80.0 |
| 20' | | 100.0 | 100.0 | 66.0 | 80.0 |
| 25' | | 100.0 | 100.0 | 66.0 | 80.0 |
| 30' | | 99.0 | 99.0 | 66.0 | 80.0 |
| 35' | | 88.3 | 88.3 | 66.0 | 80.0 |
| 40' | | 81.0 | 81.0 | 66.0 | 80.0 |
| 45' | | 76.2 | 76.2 | 66.0 | 76.2 |
| 50' | | 73.4 | 73.4 | 66.0 | 73.4 |
| 55' | | 72.2 | 72.2 | 66.0 | 72.2 |
| 15' | 60' | 100.0 | 100.0 | 66.0 | 80.0 |
| 20' | | 100.0 | 100.0 | 66.0 | 80.0 |
| 25' | | 96.6 | 96.6 | 66.0 | 80.0 |
| 30' | | 83.2 | 83.2 | 66.0 | 80.0 |
| 35' | | 74.2 | 74.2 | 66.0 | 74.2 |
| 40' | | 68.0 | 68.0 | 66.0 | 68.0 |
| 45' | | 63.8 | 63.8 | 63.8 | 63.8 |
| 50' | | 61.0 | 61.0 | 61.0 | 61.0 |
| 55' | | 59.3 | 59.3 | 59.3 | 59.3 |
| 15' | 64' | 100.0 | 100.0 | 66.0 | 80.0 |
| 20' | | 96.5 | 96.5 | 66.0 | 80.0 |
| 25' | | 78.9 | 78.9 | 66.0 | 78.9 |
| 30' | | 67.7 | 67.7 | 66.0 | 67.7 |
| 35' | | 60.0 | 60.0 | 60.0 | 60.0 |
| 40' | | 54.7 | 54.7 | 54.7 | 54.7 |
| 45' | | 50.9 | 50.9 | 50.9 | 50.9 |
| 50' | | 48.3 | 48.3 | 48.3 | 48.3 |
| 55' | | 46.6 | 46.6 | 46.6 | 46.6 |
| 15' | 72' | 88.4 | 88.4 | 66.0 | 80.0 |
| 20' | | 67.2 | 67.2 | 66.0 | 67.2 |
| 25' | | 54.7 | 54.7 | 54.7 | 54.7 |
| 30' | | 46.6 | 46.6 | 46.6 | 46.6 |
| 35' | | 41.0 | 41.0 | 41.0 | 41.0 |

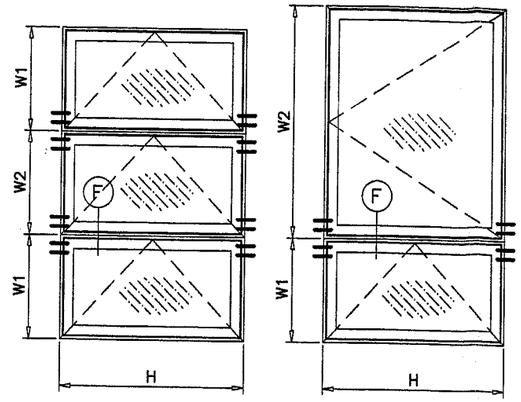


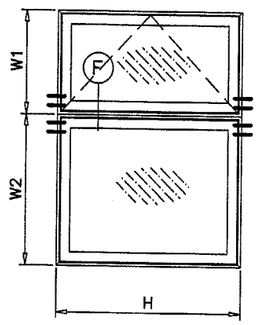


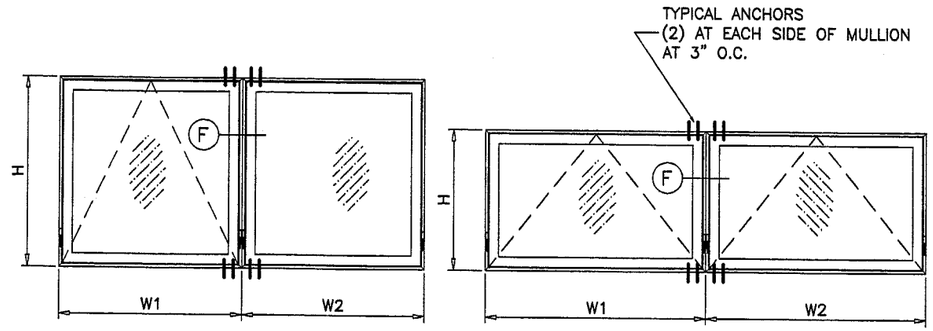


TYPICAL ELEVATIONS

SIDE BY SIDE WINDOWS

SIDE BY SIDE APPLIES TO TWO OR MORE WINDOWS

$$\text{AVG. WINDOW WIDTH} = \frac{W1 + W2}{2}$$

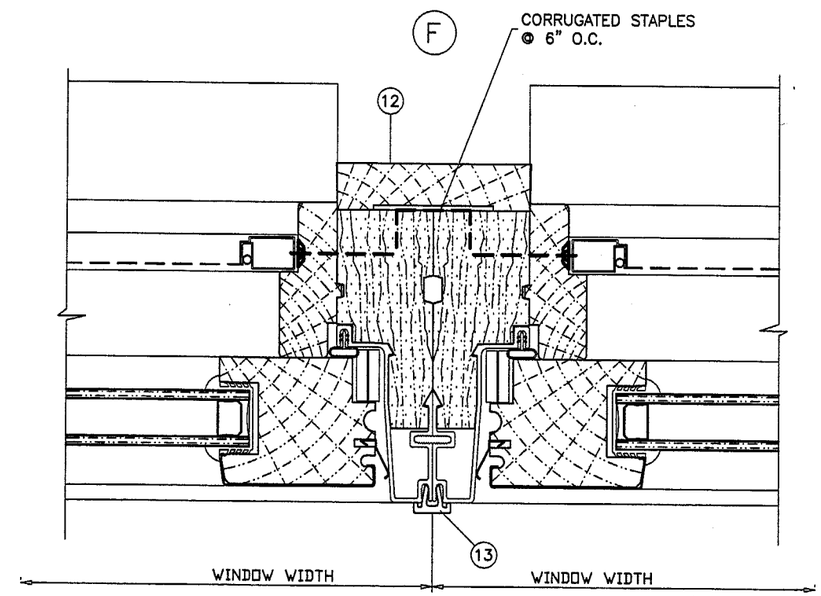


EXTERIOR

VERTICAL OR HORIZONTAL SECTION

NOTES:

1. USE CHART ON THIS SHEET FOR SIDE BY SIDE CONNECTION CAPACITY OF AWNING WINDOW, FIXED CASEMENT, OPERATING CASEMENT OR ANY COMBINATION OF ABOVE. (WINDOWS WITH IDENTICAL FRAME MEMBERS)
2. FOR AWNING TYPE WINDOW CAPACITY SEE SHEET 1. FOR FIXED CASEMENT OR OPERATING CASEMENT CAPACITY SEE THEIR CORRESPONDING NOA.
3. USE SMALLER DESIGN LOAD CAPACITY OF 1 OR 2 ABOVE.

Engr: DR. HUMAYOUN FAROOQ
STRUCTURES
FLA. PE # 16557

AUG 0 1 2001

APPROVED AS COMPLYING WITH THE SOUTH FLORIDA BUILDING CODE
DATE AUG 0 2 2001
BY Manuel Perez
PRODUCT CONTROL DIVISION
BUILDING CODE COMPLIANCE OFFICE
ACCEPTANCE NO. 01-0502.12


AL-FAROOQ CORPORATION
ENGINEERS, PLANNERS & PRODUCT DESIGN
1235 SW 87 AVE
MIAMI, FLORIDA 33174
TEL. (305) 264-8100 FAX. (305) 262-6978


COMP-ANL\W98-78CO

'CAR CLAD' WOOD AWNING WINDOW

CARADCO WOOD WINDOWS & PATIO DOORS
201 EVANS ROAD
RANTOUL, ILLINOIS 61866
TEL. (217) 893-4444 FAX (217) 893-0921

revisions:

| no | date | by | description |
|---|---|---|---|

date: 10-10-98
scale: 1/2" = 1"
dr. by: HAMID
chk. by:

drawing no. W98-78