MIAMI-DADE

MIAMI-DADE COUNTY, FLORIDA
METRO-DADE FLAGLER BUILDING

BUILDING CODE COMPLIANCE OFFICE
METRO-DADE FLAGLER BUILDING
140 WEST FLAGLER STREET, SUITE 1603
MIAMI, FLORIDA 33130-1563
(305) 375-2901 FAX (305) 375-2908

CONTRACTOR LICENSING SECTION
(305) 375-2527 FAX (305) 375-2558

CONTRACTOR ENFORCEMENT DIVISION
(305) 375-2966 FAX (305) 375-2908

PRODUCT CONTROL DIVISION
(305) 375-2902 FAX (305) 372-6339

PRODUCT CONTROL NOTICE OF ACCEPTANCE

PGT Industries
1070 Technology Drive
Nokomis ,FL 34275

Your application for Notice of Acceptance (NOA) of:
SH-701 Aluminum Single Hung Window Impact Resistant
under Chapter 8 of the Code of Miami-Dade County governing the use of Alternate Materials and Types of Construction, and completely described herein, has been recommended for acceptance by the Miami-Dade County Building Code Compliance Office (BCCO) under the conditions specified herein.

This NOA shall not be valid after the expiration date stated below. BCCO reserves the right to secure this product or material at any time from a jobsite or manufacturer's plant for quality control testing. If this product or material fails to perform in the approved manner, BCCO may revoke, modify, or suspend the use of such product or material immediately. BCCO reserves the right to revoke this approval, if it is determined by BCCO that this product or material fails to meet the requirements of the South Florida Building Code.

The expense of such testing will be incurred by the manufacturer.

ACCEPTANCE NO.: 01-0629.08
EXPIRES: 11/01/2006

Raul Rodriguez
Chief Product Control Division

THIS IS THE COVERSHEET, SEE ADDITIONAL PAGES FOR SPECIFIC AND GENERAL CONDITIONS
BUILDING CODE & PRODUCT REVIEW COMMITTEE

This application for Product Approval has been reviewed by the BCCO and approved by the Building Code and Product Review Committee to be used in Miami-Dade County, Florida under the conditions set forth above.

Francisco J. Quintana, R.A.
Director
Miami-Dade County
Building Code Compliance Office

APPROVED: 11/01/2001

Vinyl Tech/Progressive Glass Technology

ACCEPTANCE No. : 01-0629.08

APPROVED : November 01, 2001

EXPIRES : November 01, 2006

NOTICE OF ACCEPTANCE: SPECIFIC CONDITIONS

1. SCOPE

This **revises & renews** Notice of Acceptance No. **98-0223.01**, which was issued on October 22, 1998. It approves an aluminum single hung window, as described in Section 2 of this Notice of Acceptance, designed to comply with the South Florida Building Code, 1994 Edition for Miami-Dade County, for the locations where the pressure requirements, as determined by SFBC Chapter 23, do not exceed the Design Pressure Rating values indicated in the approved drawings.

2. PRODUCT DESCRIPTION

The **Series SH-701 Aluminum Single Hung Window – Impact** and its components shall be constructed in strict compliance with the following document: Drawing No. **4040**, titled "SH-701 Aluminum Single Hung window" Sheets 1 thru 4 of 4, prepared by manufacturer, dated 2/9/98, 08-18-98 and last revised on 10-11-2001, signed and sealed by Robert L. Clark, P.E., bearing the Miami-Dade County Product Control Approval stamp with the Notice of Acceptance number and approval date by the Miami-Dade County Product Control Division. These documents shall hereinafter be referred to as the approved drawings.

3. LIMITATIONS

3.1 This approval applies to single unit applications only, as shown in approved drawings.

3.2 Water infiltration requirements: see design pressure table.

4. INSTALLATION

4.1 The aluminum single hung window and its components shall be installed in strict compliance with the approved drawings.

4.2 The installation of this product **will not require** a hurricane protection system.

5. LABELING

5.1 Each unit shall bear a permanent label with the manufacturer's name or logo, city, state and following statement: "Miami-Dade County Product Control Approved".

6. BUILDING PERMIT REQUIREMENTS

6.1 Application for building permit shall be accompanied by copies of the following:

6.1.1 This Notice of Acceptance.

6.1.2 Duplicate copies of the approved drawings, as identified in Section 2 of this Notice of Acceptance, clearly marked to show the components selected for the proposed installation.

6.1.3 Any other documents required by the Building Official or the South Florida Building Code (SFBC) in order to properly evaluate the installation of this system.

Ishaq I. Chanda

Ishaq I. Chanda, P.E., Product Control Examiner
Product Control Division

Vinyl Tech/Progressive Glass Technology

ACCEPTANCE No. : 01-0629.08

APPROVED : November 01, 2001

EXPIRES : November 01, 2006

NOTICE OF ACCEPTANCE: STANDARD CONDITIONS

1 Renewal of this Acceptance (approval) shall be considered after a renewal application has been filed and the original submitted documents, including test-supporting data, engineering documents, are no older than eight (8) years.

2. Any and all approved products shall be permanently labeled with the manufacturer's name, city, state, and the following statement: "Miami-Dade County Product Control Approval", or as specifically stated in the specific conditions of this Acceptance.

3. Renewals of Acceptance will not be considered if:
   a. There has been a change in the South Florida Building Code affecting the evaluation of this product and the product is not in compliance with the code changes.
   b. The product is no longer the same product (identical) as the one originally approved.
   c. If the Acceptance holder has not complied with all the requirements of this acceptance, including the correct installation of the product.
   d. The engineer who originally prepared, signed and sealed the required documentation initially submitted, is no longer practicing the engineering profession.

4. Any revision or change in the materials, use, and/or manufacture of the product or process shall automatically be cause for termination of this Acceptance, unless prior written approval has been requested (through the filing of a revision application with appropriate fee) and granted by this office.

5. Any of the following shall also be grounds for removal of this Acceptance:
   a. Unsatisfactory performance of this product or process.
   b. Misuse of this Acceptance as an endorsement of any product, for sales, advertising or any other purposes.

6. The Notice of Acceptance number preceded by the words Miami-Dade County, Florida, and followed by the expiration date may be displayed in advertising literature. If any portion of the Notice of Acceptance is displayed, then it shall be done in its entirety.

7. A copy of this Acceptance as well as approved drawings and other documents, where it applies, shall be provided to the user by the manufacturer or its distributors and shall be available for inspection at the job site at all time. The engineer needs not reseal the copies.

8. Failure to comply with any section of this Acceptance shall be cause for termination and removal of Acceptance.

9. This Notice of Acceptance consists of pages 1, 2 and this last page 3.

END OF THIS ACCEPTANCE

Ishaq I. Chanda

Ishaq I. Chanda, P.E., Product Control Examiner
Product Control Division

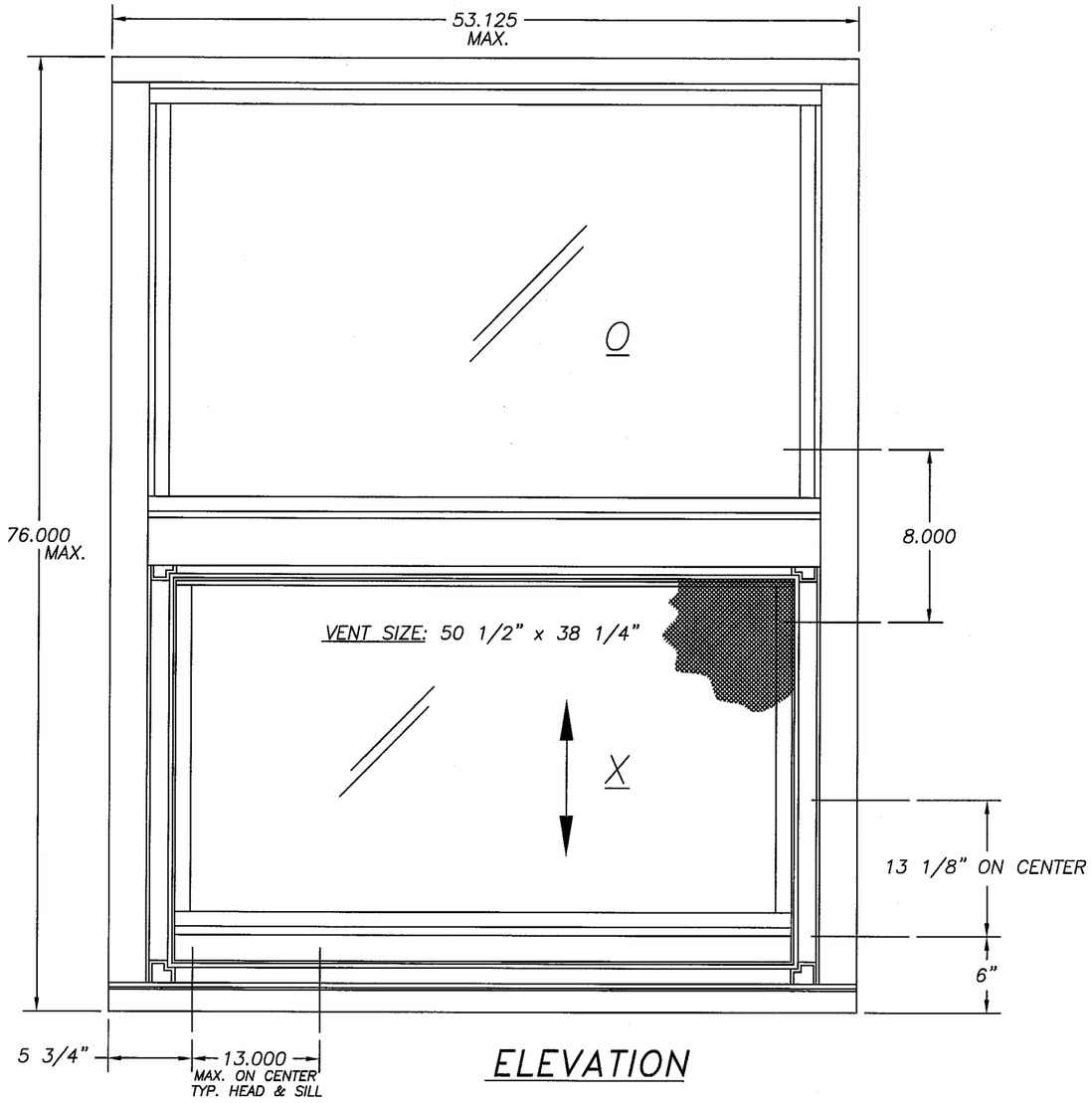

ELEVATION

ITEM	DESCRIPTION	V.T. #	QTY. / LOCATION	VENDOR	VENDOR #
1	FLANGED FRAME HEAD (Alum. 6063–T5)	612225	1	ALUMAX	AF–12225
2	FLANGED FRAME SILL (Alum. 6063–T5)	612226	1	ALUMAX	AF–12226
3	FLANGED FRAME JAMB (Alum. 6063–T5)	612227	2	ALUMAX	AF–12227
4	FIXED MEETING RAIL (Alum. 6063–T5)	612228	1	ALUMAX	AF–12228
5	SASH TOP RAIL (Alum. 6063–T5)	612229	1	ALUMAX	AF–12229
6	SASH BOTTOM RAIL (Alum. 6063–T5)	612230	1	ALUMAX	AF–12230
7	SASH SIDE RAIL (Alum. 6063–T5)	612231	2	ALUMAX	AF–12231
8	GLAZING BEAD (Alum. 6063–T5)	6534571	8	ALUMAX	AF–534571
9	WEATHERSTRIP – VINYL BULB	6TP247K	8 (1 per Glazing Bead)	TEAM PLASTICS	TP–247
10	SILICON	62899C		DOW CORNING	899
11	5/16" (.350) W/SAFLEX BY SOLUTIA INTERLAYER		2	H.P.G.	
12	5/16" (.350) W/DUPONT PVB INTERLAYER		2	H.P.G.	
13	#6 x .750 PHIL. PN. HD.	7658PFAA	2 (to attach Balances to Jambs)	AQUA FASTENERS	
14	SWEEP LATCH		1(11.5" from end of vent top rail) 2(if width is >= 42")	MINIATURE DIE CASTING	PGT.214.XX
15	#8 x .625 PHIL FLT. HD.	7858WW	2 (Sweep Latch Screws) 4 (when using 2 Sweep Latches)	MERCHANTS FASTENER	
16	WINDLOAD ADAPTER (Alum. 6063–T5)	612236	2 (@ frame jambs, 30" from bot.)	ALUMAX	AF–12236
17	#8 x .375 PHIL. P.H. TEK	78X38PPT	4 (Windload Adapter Screws)	MERCHANTS FASTENER	
18	WEATHERSTRIP – VINYL BULB\SASH	6TP249K	1 (at Vent Bottom Rail)	TEAM PLASTICS	TP–249
19	SASH TOP GUIDE		2 (1 per each balance)	MASTER TOOL	
20	SCREEN		1	VINYL TECH.\PGT	
21	BALANCE COVER		2 (1 per each balance)	WYBORG	5TAVE
22	BALANCE		2 (1 @ each frame jamb)	CALDWELL	
23	WEATHERSTRIP – PILE\FINSEAL	61062W	3 (@ vent jambs & vent top rail)	SCHLEGEL CORP.	FS7826–187
24	SASH FACE GUIDE	71087	2 (1/vent jamb. 2.5" from bot.)	VINYL TECH.\PGT	
25	#6 x .500 PHIL. FLT. HD.	76X12FPAW	(sash face guide screws)	SCHERER IND. PROD.	
26	SASH STOP (Alum. 6063–T5)	612244	2 (@ top of each frame jamb)	ALUMAX	AF–12244
27	#8 x 1.000 PHIL. P.H. SMS	78X1PPA	4 (Frame & Vent Assy. screws)	MERCHANTS FASTENER	
28	SEAM SEALER	6SM55W		SCHNEE/MOREHEAD	SM5504
29	WINDLOAD ADAPTER (PLASTIC)	61207	2 (@ frame jambs, 30" from bot.)	PROTOTYPE	WC996–1207

DESIGN PRESSURE RATING (P.S.F.)							
5/16 LAMINATED W/ ANNEALED GLASS				5/16 LAMINATED W/ HEAT STRENGTHENED GLASS			
WATER INFILTRATION REQUIRED		WATER INFILTRATION NOT REQUIRED		WATER INFILTRATION REQUIRED		WATER INFILTRATION NOT REQUIRED	
–50.0	+50.0	–50.0	+50.0	–80.0	+66.7	–80.0	+80.0

PRODUCT RENEWED
ACCEPTANCE No. 01-0629.08
EXPIRATION DATE November 01, 2010
By Ishaq I. Chanda
PRODUCT CONTROL DIVISION
BUILDING CODE COMPLIANCE OFFICE

LARGE MISSLE IMPACT WINDOWS

1.) GLAZING OPTIONS: A. 5/16" (.350) LAMINATED GLASS
(1/8" annealed/.090 film/1/8" annealed)
B. 5/16" (.350) LAMINATED GLASS
(1/8" heat strengthened/.090 film/1/8" heat strengthened)

2.) CONFIGURATIONS: OX

3.) DESIGN PRESSURE RATING: SEE TABLE

4.) ANCHORS:
MAX. 5 3/4" FROM EACH CORNER (HEAD & SILL)
MAX. 6" FROM EACH CORNER (JAMBS)
MAX. SPACING AT HEAD & SILL: 13.000
MAX. SPACING AT JAMBS: 13.125

5.) SHUTTER REQUIREMENT:
NO SHUTTERS REQUIRED

6.) REFERENCE TEST REPORT: FTL–1889

10/11/01

Robert L. Clark, P.E.
PE #39712
Structural

PGT INDUSTRIES

1070 TECHNOLOGY DRIVE
NOKOMIS, FL 34275

P.O. BOX 1529
NOKOMIS, FL 34274

Revsd By:	Date:	Revisions:
F.K.	10/11/01	TB, TABLE, EXTR.
D.B.	8/18/98	
Drawn By: D.B.	Date: 2/9/98	

Description: ELEVATION & PARTS LIST

Title: ALUMINUM SINGLE HUNG WINDOW

Series/Model:	Scale:	Sheet:	Drawing No.	Rev:
SH–701	NTS	1 of 4	4040	B

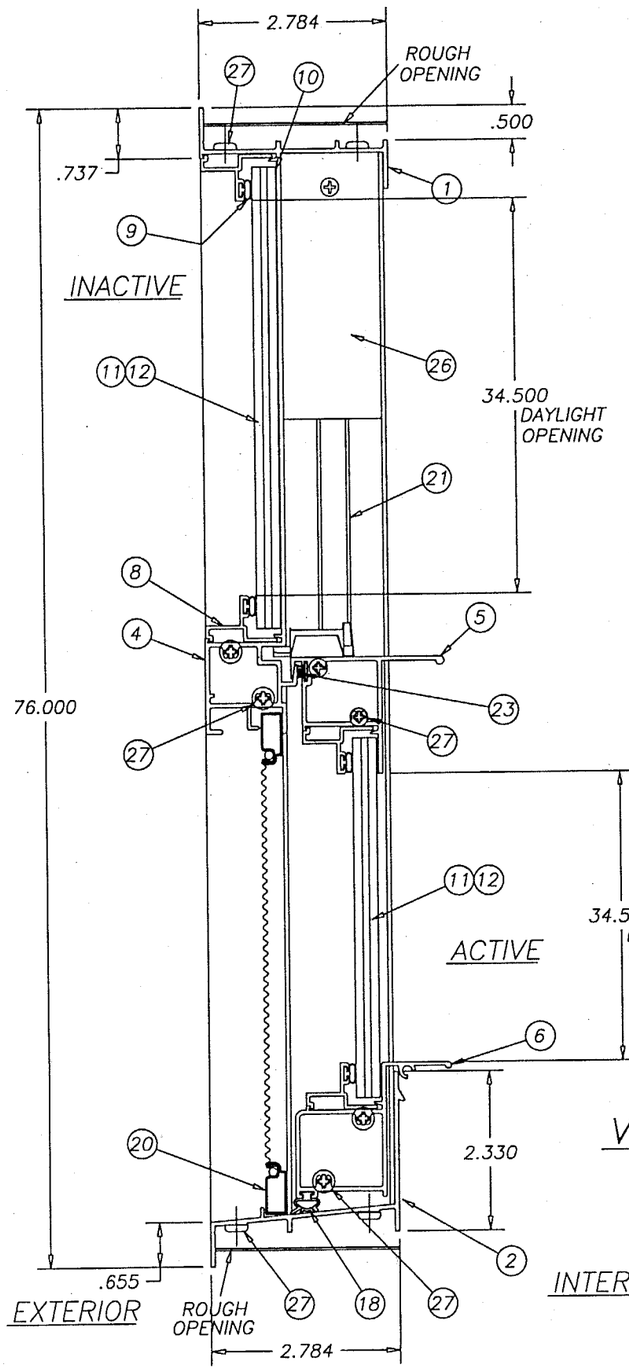

VERTICAL SECTION

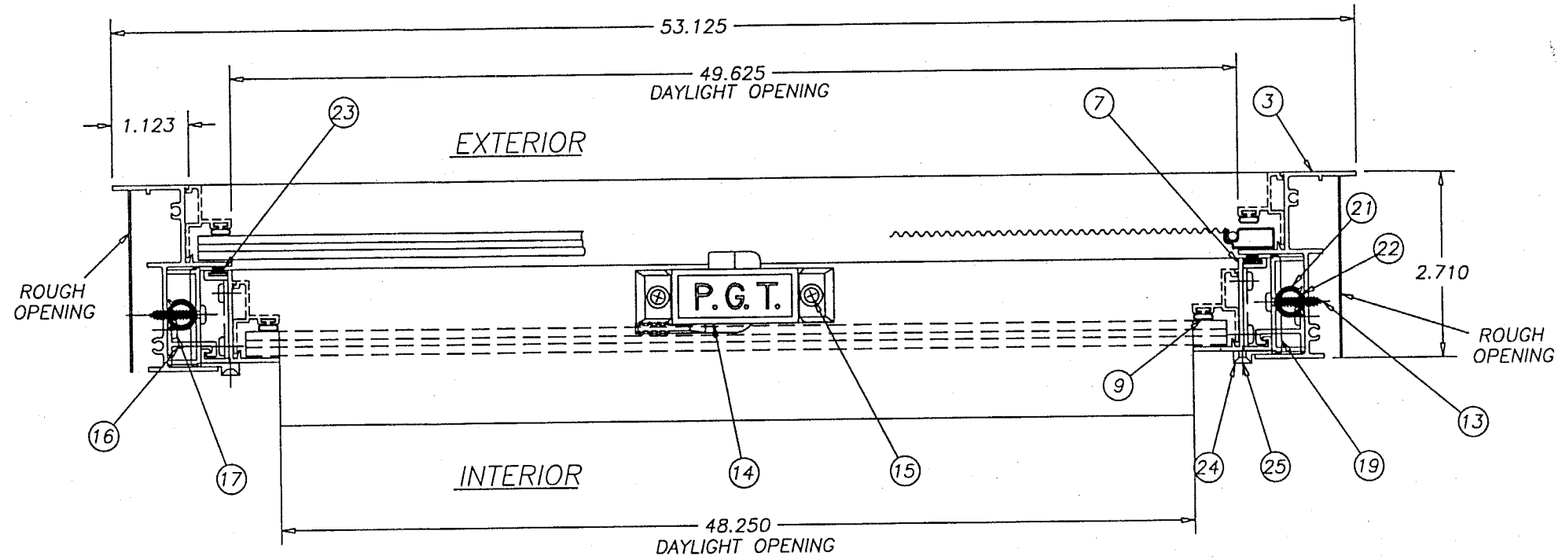

HORIZONTAL SECTION

REFERENCE TEST REPORT: FTL-1889

10/11/01

Robert L. Clark, P.E.
PE #39712
Structural

PGT INDUSTRIES

1070 TECHNOLOGY DRIVE
NOKOMIS, FL 34275

P.O. BOX 1529
NOKOMIS, FL 34274

Revsd By:	Date:	Revisions:
F.K.	10/11/01	TB, TABLE, EXTR.
D.B.	8/18/98	
D.B.	2/9/98	

PRODUCT RENEWED
ACCEPTANCE No. 01-0629.08
EXPIRATION DATE Nov 01, 2006
By Ishaq I. Chanda
PRODUCT CONTROL DIVISION
BUILDING CODE COMPLIANCE OFFICE

Description: SECTIONS

Title: ALUMINUM SINGLE HUNG WINDOW

Series/Model:	Scale:	Sheet:	Drawing No.	Rev:
SH-701	NTS	2 of 4	4040	B

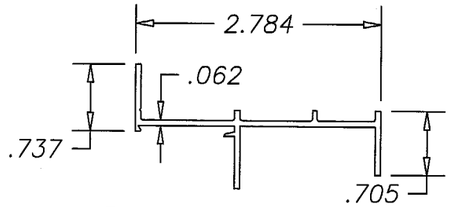

1 ALUM. 6063–T5

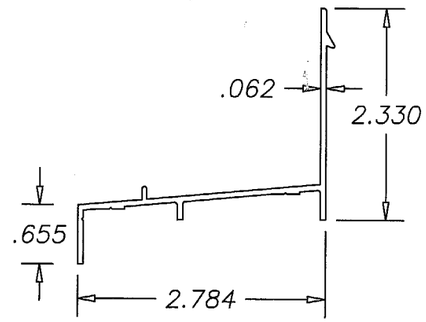

2 ALUM. 6063–T5

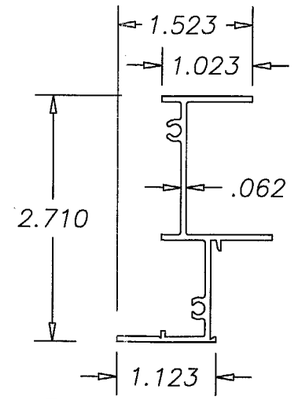

3 ALUM. 6063–T5

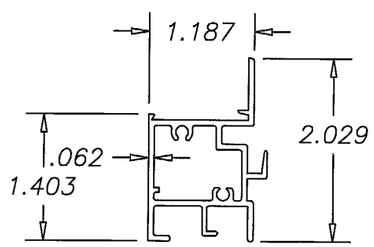

4 ALUM. 6063–T5

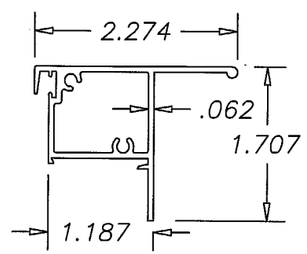

5 ALUM. 6063–T5

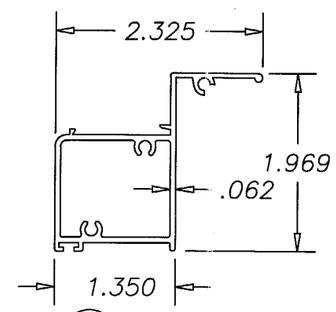

6 ALUM. 6063–T5

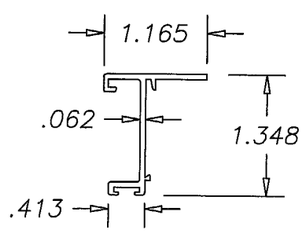

7 ALUM. 6063–T5

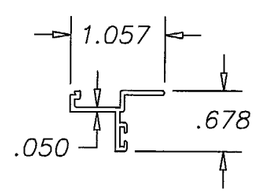

8 ALUM. 6063–T5

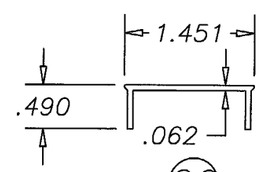

26 ALUM. 6063–T5

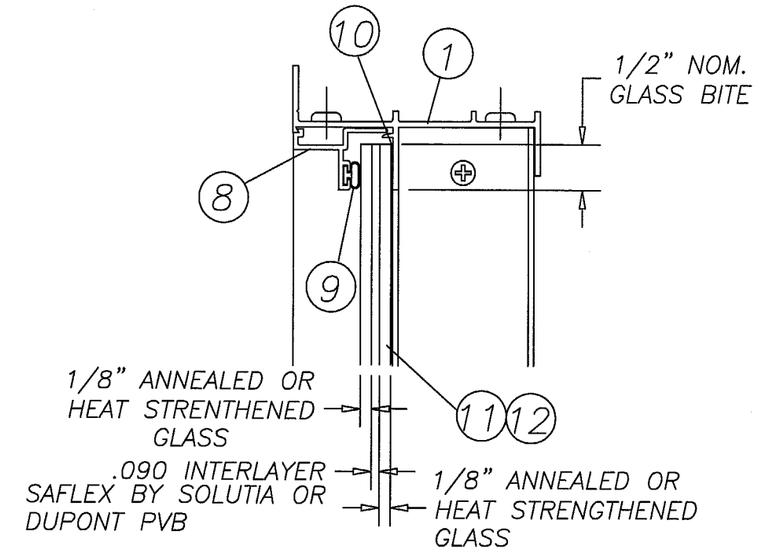

5/16" LAMINATED GLAZING DETAILS

REFERENCE TEST REPORT: FTL–1889

10/11/01

Robert L. Clark, P.E.
PE #39712
Structural

PGT INDUSTRIES

1070 TECHNOLOGY DRIVE
NOKOMIS, FL 34275

P.O. BOX 1529
NOKOMIS, FL 34274

Revsd By:	Date:	Revisions:
F.K.	10/11/01	TB, TABLE, EXTR.
D.B.	8/18/98	
Drawn By: D.B.	Date: 2/9/98	

PRODUCT RENEWED
ACCEPTANCE No. 01-0629.08
EXPIRATION DATE Nov 01, 2006
By Ishaq I. Chanda
PRODUCT CONTROL DIVISION
BUILDING CODE COMPLIANCE OFFICE

Description: EXTRUSIONS & GLAZING OPTIONS

Title: ALUMINUM SINGLE HUNG WINDOW

Series/Model:	Scale:	Sheet:	Drawing No.	Rev:
SH–701	NTS	3 of 4	4040	B

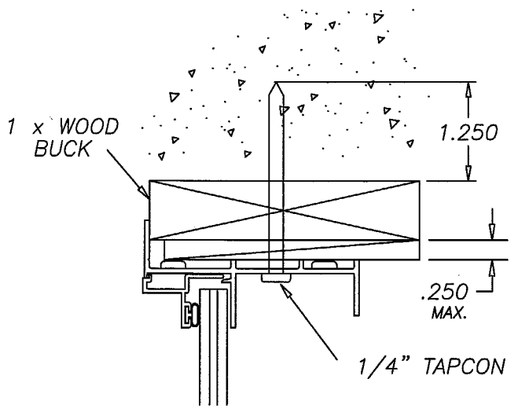

TYP. HEAD

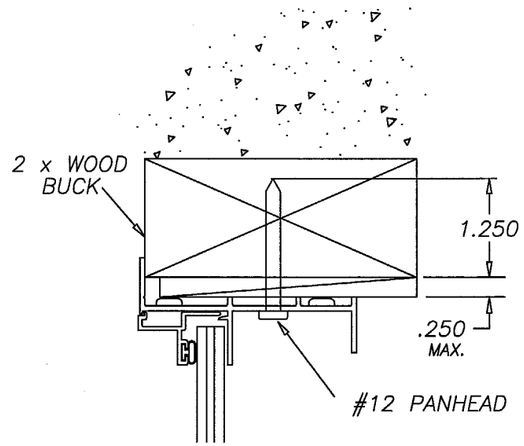

TYP. HEAD

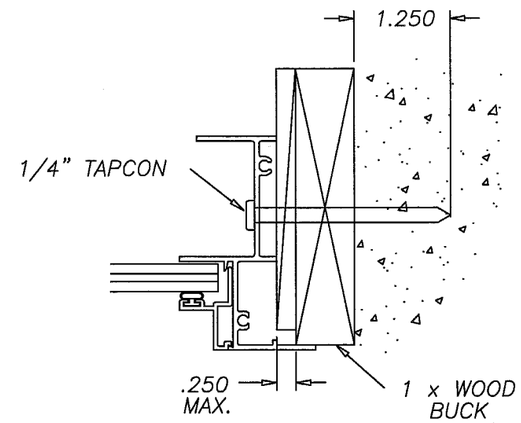

TYP. JAMB

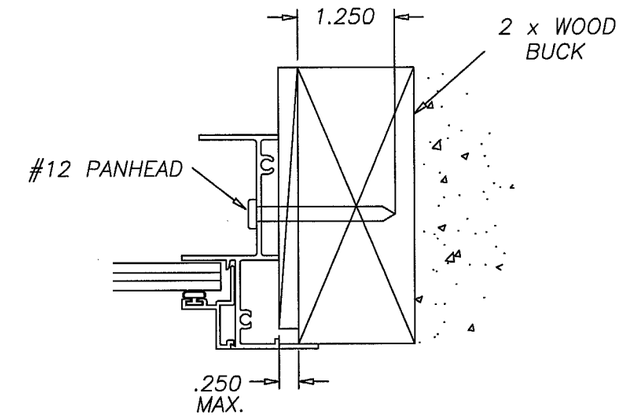

TYP. JAMB

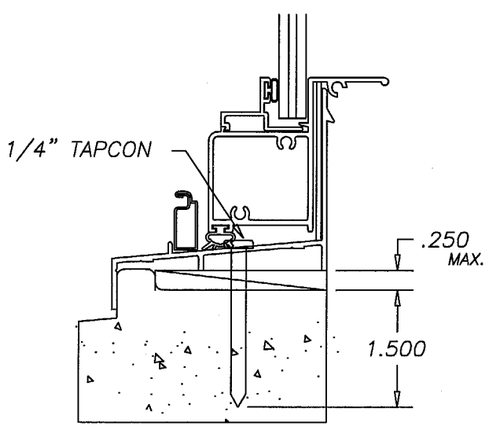

TYP. SILL

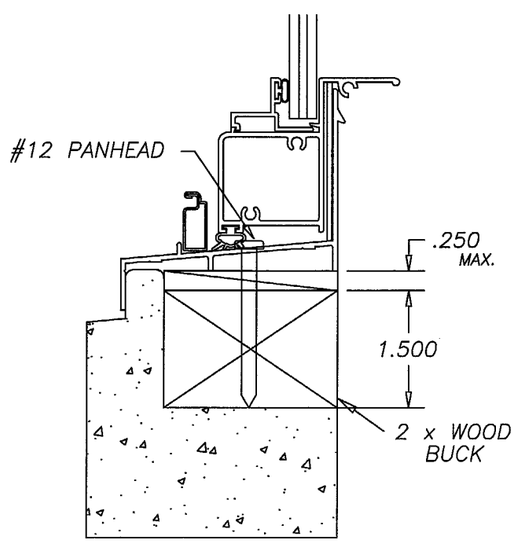

TYP. SILL

REFERENCE TEST REPORT: FTL-1889

10/11/01

Robert L. Clark, P.E.
PE #39712
Structural

PGT INDUSTRIES

1070 TECHNOLOGY DRIVE
NOKOMIS, FL 34275

P.O. BOX 1529
NOKOMIS, FL 34274

Revsd By: F.K.	Date: 10/11/01	Revisions: TB, TABLE, EXTR.
Revsd By: D.B.	Date: 8/18/98	Revisions:
Drawn By: D.B.	Date: 2/9/98	

PRODUCT RENEWED
ACCEPTANCE No. 01-0629.08
EXPIRATION DATE November 01, 2006
By Ishaq I. Zhanda
PRODUCT CONTROL DIVISION
BUILDING CODE COMPLIANCE OFFICE

Description: ANCHORAGE

Title: ALUMINUM SINGLE HUNG WINDOW

Series/Model:	Scale:	Sheet:	Drawing No.	Rev:
SH-701	NTS	4 of 4	4040	B