MIAMI-DADE

MIAMI-DADE COUNTY, FLORIDA
METRO-DADE FLAGLER BUILDING

BUILDING CODE COMPLIANCE OFFICE
METRO-DADE FLAGLER BUILDING
140 WEST FLAGLER STREET, SUITE 1603
MIAMI, FLORIDA 33130-1563
(305) 375-2901 FAX (305) 375-2908

CONTRACTOR LICENSING SECTION
(305) 375-2527 FAX (305) 375-2558

CONTRACTOR ENFORCEMENT DIVISION
(305) 375-2966 FAX (305) 375-2908

PRODUCT CONTROL DIVISION
(305) 375-2902 FAX (305) 372-6339

PRODUCT CONTROL NOTICE OF ACCEPTANCE

Raynor Garage Doors
1101 East River Road, P.O. Box 448
Dixon ,IL 61021

Your application for Notice of Acceptance (NOA) of:
Rolling Steel Flat Slat Door
under Chapter 8 of the Code of Miami-Dade County governing the use of Alternate Materials and Types of Construction, and completely described herein, has been recommended for acceptance by the Miami-Dade County Building Code Compliance Office (BCCO) under the conditions specified herein.

This NOA shall not be valid after the expiration date stated below. BCCO reserves the right to secure this product or material at any time from a jobsite or manufacturer's plant for quality control testing. If this product or material fails to perform in the approved manner, BCCO may revoke, modify, or suspend the use of such product or material immediately. BCCO reserves the right to revoke this approval, if it is determined by BCCO that this product or material fails to meet the requirements of the South Florida Building Code.

The expense of such testing will be incurred by the manufacturer.

ACCEPTANCE NO.: 01-0814.11
EXPIRES: 08/31/2006

Raul Rodriguez
Chief Product Control Division

THIS IS THE COVERSHEET, SEE ADDITIONAL PAGES FOR SPECIFIC AND GENERAL CONDITIONS
BUILDING CODE & PRODUCT REVIEW COMMITTEE

This application for Product Approval has been reviewed by the BCCO and approved by the Building Code and Product Review Committee to be used in Miami-Dade County, Florida under the conditions set forth above.

Francisco J. Quintana, R.A.
Director
Miami-Dade County
Building Code Compliance Office

APPROVED: 09/27/2001

Raynor Garage Doors.

ACCEPTANCE NO: 01-0814.11

APPROVED: SEP 27 2001

EXPIRES: 08/31/2006

NOTICE OF ACCEPTANCE: SPECIFIC CONDITIONS

1.0 SCOPE:

1.1 This renews the Notice of Acceptance No. 93-1102.07 which was issued on 06/01/95.It approves a roll up door with maximum dimensions of 12'-0" wide x 07-'0" through 29'-0" high as described in section 2 of this Notice of Acceptance, designed to comply with the South Florida Building Code, 1994 edition for Miami-Dace County (S.F.B.C.) for the locations where the pressure requirements, as determined by the S.F.B.C. chapter 23, do not exceed the design pressure rating values indicated on the approved drawings.

2.0 PRODUCT DESCRIPTION:

2.1 The 12' wide Raynor Door and its components shall be built in strict compliance with the following documents: Drawing No P-1281, titled "Series FF Flat Slat" prepared by Raynor Garage Door, dated 08/25/94, with latest revision on 05/18/95, sheet 1 of 1, bearing the Miami-Dade County Product Control approval stamp with the Notice of Acceptance number and approval date by the Miami Dade Product Control Division. These documents shall hereinafter be referred to as the approved drawings.

3.0 LIMITATION:

3.1 This approval requires the manufacturer to do testing of all coils used to fabricate door slats under this Notice of Acceptance. A minimum of 2 specimens shall be cut from each coil and tensile tested according ASTM E-8 by a Dade County approved laboratory selected and paid by the manufacturer. Every 3 months, four times per year, the manufacturer shall mail to this office: a copy of the test reports with confirmation that the specimens were selected from coils at the manufacturer's production facilities and a notarized statements from the manufacturer that only coils with a yield strength of 38,000 psi or more shall be used to make door slats for Dade County under this Notice of Acceptance.

4.0 INSTALLATION:

4.1 The Roll-Up Door and its components shall be installed in strict compliance with the approved drawings.
4.2 The installation of this door does not require a hurricane protection system.

5.0 LABELLING

5.1 Each door shall bear a permanent label with the manufacturer's name or logo, city, state and the following statement "Miami Dade County Product Control Approved"

6.0 BUILDING PERMIT REQUIREMENTS.

6.1 Application for Building Permit shall be accompanied by copies of the following:

6.1.1 This Notice of Acceptance, including the approved drawings as identified in section 2 clearly marked toshow the components selected for the proposed installation.

6.1.2 Any other document required by the building Official or the S.F.B.B. in order to properly evaluate the installation of this system.

Candido Font, PE, Sr. Product Control Examiner
Product Control Division

Raynor Garage Doors.

ACCEPTANCE NO: 01-0814.11

APPROVED: SEP 27 2001

EXPIRES: 08/31/2006

NOTICE OF ACCEPTANCE STANDARD CONDITIONS

1. Renewal of this Acceptance (approval) shall be considered after a renewal application has been filed and the original submitted documentation, including test supporting data, engineering documents, are no older than eight (8) years.

2. Any and all approved products shall be permanently labeled with the manufacturer's name, city, state and the following statement: "Dade County Product Control Approved", or as specifically stated in the specific conditions of this Acceptance.

3. Renewals of Acceptance will not be considered if:
   a) There has been a change in the South Florida Building Code affecting the evaluation of this product and the product is not in compliance with the code changes;
   b) The product is no longer the same product (identical) as the one originally approved;
   c) If the Acceptance holder has not complied with all the requirements of this acceptance, including the correct installation of the product;
   d) The engineer, who originally prepared, signed and sealed the required documentation initially submitted, is no longer practicing the engineering professions.

4. Any revision or change in the materials, use, and/or manufacture of the product or process shall automatically be cause for termination of this Acceptance, unless prior written approval has been requested (through the filing of a revision application with appropriate fee) and granted by this office.

5. Any of the following shall also be grounds for removal of this Acceptance:
   a) Unsatisfactory performance of this product or process;
   b) Misuse of this Acceptance as an endorsement of any product, for sales, advertising or any other purpose.

6. The Notice of Acceptance number preceded by the words Dade County, Florida, and followed by the expiration date may be displayed in advertising literature. If any portion of the Notice of Acceptance is displayed, then it shall be done in its entirety.

7. A copy of this Acceptance as well as approved drawings and other documents, where it applies, shall be provided to the user by the manufacturer or its distributors and shall be available for inspection at the job site at all times. The engineer need not reseal the copies.

8. Failure to comply with any section of this Acceptance shall be cause for termination and removal of Acceptance.

9. This Acceptance contains pages 1, 2 and this last page 3.

Candido Font, PE, Sr. Product Control Examiner
Product Control Division

END OF THIS ACCEPTANCE

Raynor Garage Doors.

ACCEPTANCE NO: 01-0814.11

APPROVED: SEP 27 2001

EXPIRES: 08/31/2006

NOTICE OF ACCEPTANCE: EVIDENCE SUBMITTED

A DRAWINGS:

1. Drawing prepared by Raynor Garage Door, titled "SPEC: WINDLOAD SERIES: FF FLAT SLAT", Drawing No. P-1281, dated 08/25/94 with latest revision on 05/18/95, sheets 1 of 1, signed and sealed by R. A. Baumann PE.

B TEST:

	Test Report	Test	Date	Signature
1.	Heti 94-303	PA 202	09/20/94	H.M. Medina PE.
2.	Heti 94-306	PA 201 & 203	09/21/94	H. M. Medina PE.
3.	Heti 94-1009	Force Entry	10/05/94	H. M. Medina PE.
4.	Heti 94-T52	ASTM E-8	12/05/94	H. M. Medina PE.

C CALCULATIONS:

1. Anchor calculations, dated 05/19/95 pages 1 of 1, prepared by R. A. Bauman sheet 1 of 1, signed and sealed by R. A. Bauman PE.

D STATEMENTS:

1. No change letter issued by Raynor Garage Doors on 08/05/01, signed by G. Wedekind and notarized by D. L. Stratton.
2. Tensile test and Affidavit issued by Raynor Garage Doors on 08/01/01, signed by G. Wedeking and notarized by D. L. Stratton.

Candido Font, PE, Sr. Product Control Examiner
Product Control Division

NOTE: FOR THRU-BOLT W/MASONRY USE SAME WALL FASTENER SPACING AS STEEL JAMB

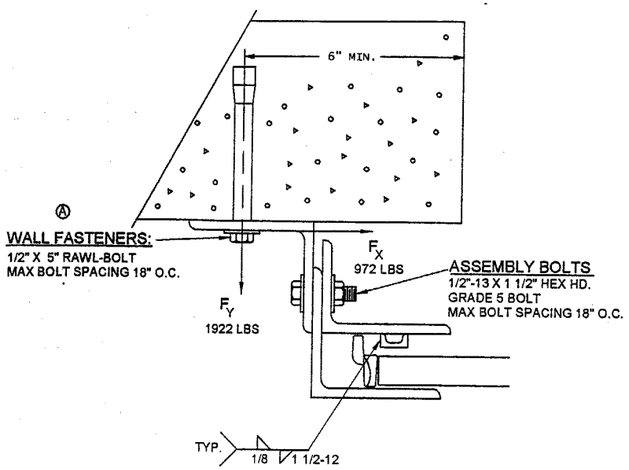

MASONRY JAMB -"Z" MTD.

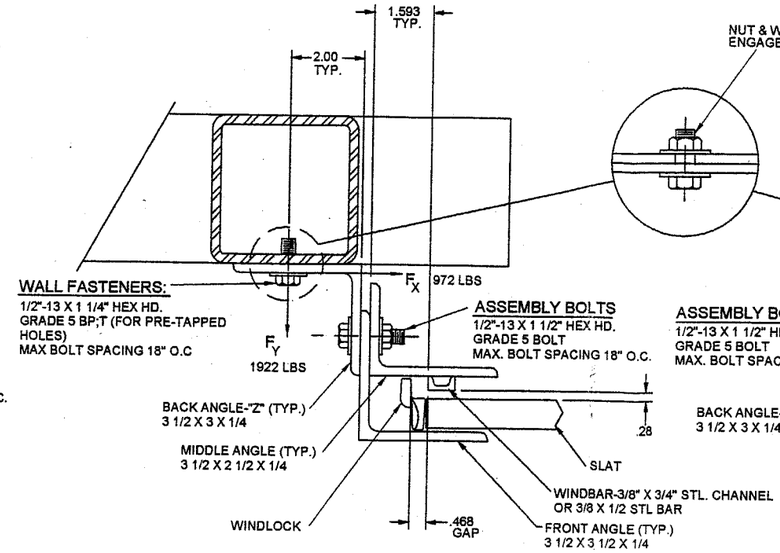

STEEL JAMB -"Z" MTD.

NUT & WASHER MUST BE USED IF TAPPED THREAD ENGAGEMENT IS LESS THAN 1/4" FOR 1/2" DIA. BOLT.

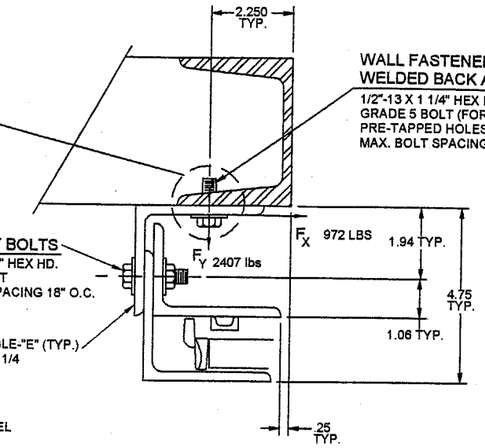

STEEL JAMB - "E" MTD.

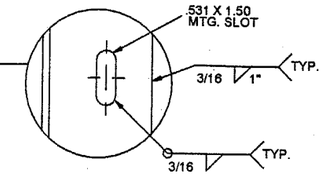

GENERAL NOTES

1. BUILDING DESIGNER NOTE: STRUCTURE MUST BE DESIGNED TO SUPPORT THE FORCES SHOWN (Fx and Fy)

SPECIFICATIONS:

CURTAIN- INTERLOCKING SLATS ROLLFORMED FROM COMMERCIAL QUALITY HOT DIPPED GALVANIZED (G-90) STEEL PER ASTM A-525 AND A-526. MINIMUM YIELD ON STEEL SLATS IS 38,820 PSI.
FINISH SHALL BE A TWO COAT BAKED ON PRIME PAINT APPLIED PRIOR TO ROLLFORMING. MALLEABLE IRON GALVANIZED ENDLOCKS FASTENED TO ALTERNATE SLATS WITH TWO ZINC PLATED STEEL RIVETS PER LOCK, ELIMINATE LATERAL MOVEMENT AND PREVENT SLATS FROM WEARING AT SURFACES COMING IN CONTACT WITH GUIDES. BOTTOM OF CURTAIN SHALL BE REINFORCED WITH TWO STEEL ANGLES, MINIMUM 2 X 2 X 1/8.

GUIDES-STRUCTURAL STEEL ANGLES PER ASTM A-36,MINIMUM 1/4" THICK, PROVIDED WITH FOUR REMOVABLE BELLMOUTH CURTAIN STOPS.

BRACKETS-STEEL PLATES,MINIMUM 3/16" THICK,BOLTED TO GUIDES FOR MOUNTING CURTAIN AND BARREL ASSEMBLY. DRIVE SIDE BRACKET SHALL BE FITTED WITH A SEALED BALL BEARING FOR LONG LIFE.

BARREL-STRUCTURAL STEEL PIPE PER ASTM A-500 OR ASTM A-120, MINIMUM 4 1/2" O.D. X .120" WALL AND DESIGNED TO LIMIT MAXIMUM DEFLECTION UNDER LOAD TO .03" PER FOOT OF SPAN.

SPRING COUNTERBALANCE-THE CURTAIN SHALL BE COUNTERBALANCED BY MEANS OF OIL TEMPERED, HELICAL TORSION SPRINGS, GREASE-PACKED AND MOUNTED ON A SINGLE CONTINUOUS STEEL TORSION SHAFT. SPRINGS SHALL BE COMPRESSION SPRING DESIGN TO FACILITATE ANY COUNTER-BALANCE MAINTENANCE. CAST IRON SPRING ANCHORS SHALL TRANSFER FULL SPRING LOADING TO THE BARREL.

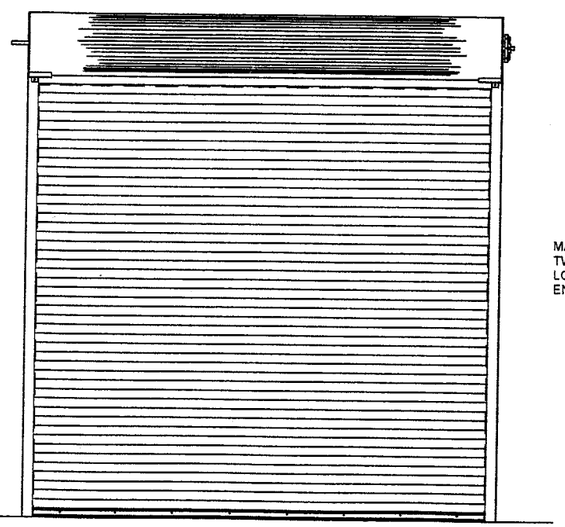

ELEVATION
NOT TO SCALE

MANUAL PUSH-UP DOORS REQUIRE TWO (2) SLIDE BOLTS PER DOOR. LOCATE OPPOSITE EACH OTHER TO ENGAGE EACH GUIDE 5/8" MIN.

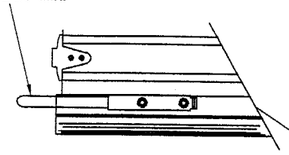

SLIDE BOLT
NOT TO SCALE

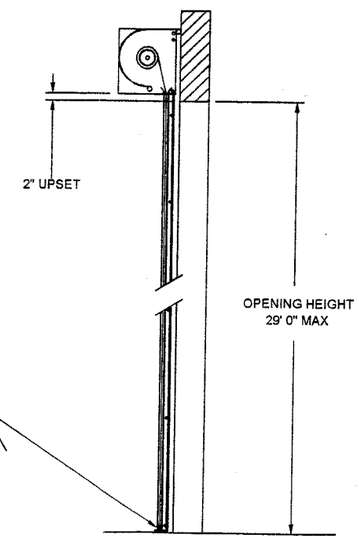

SECTION THRU OPENING
NOT TO SCALE

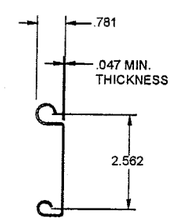

SLAT MODEL "FF"

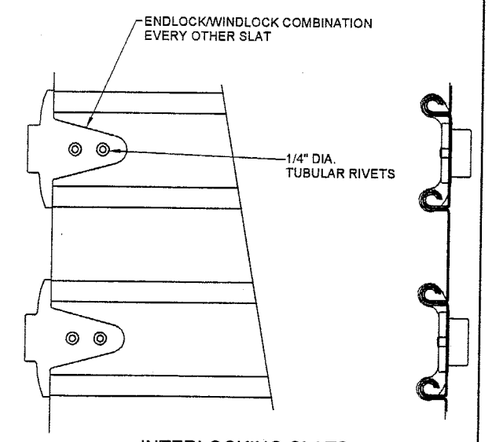

INTERLOCKING SLATS

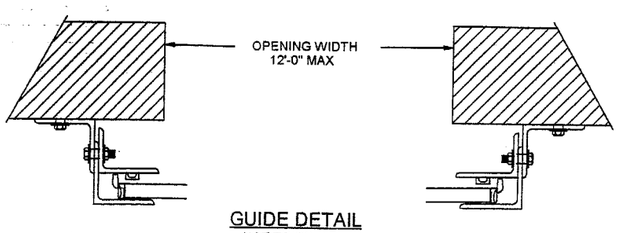

GUIDE DETAIL
NOT TO SCALE

THIS AREA IS FOR DADE COUNTY USE ONLY

APPROVED AS COMPLYING WITH THE SOUTH FLORIDA BUILDING CODE
DATE SEP 27 2001
BY
PRODUCT CONTROL DIVISION
BUILDING CODE COMPLIANCE OFFICE
ACCEPTANCE NO. 01-0814.11

DESIGN LOAD
+60 PSF
- 60 PSF
LARGE MISSLE
IMPACT RESISTANT

8-28-01
EXPIRES 2-28-02
REGISTERED ENGINEER: RICHARD A. BAUMANN
STATE REGISTRATION NUMBER: 0036469

REV.	DESCRIPTION	ECN. NO.	DATE
A	WAS 1/2" FOURWAY MASONARY ANCHOR		5/18/95

SCALE: HALF
DRAWN BY: J. BONNELL
CHECKED BY: J. BONNELL
DATE: 08/25/94
ECN. NO.:

RAYNOR GARAGE DOORS
BOX 448,EAST RIVER ROAD
DIXON, ILL. 61021

TITLE: SPEC., WINDLOAD SERIES "FF" FLAT SLAT

NO. P-1281 | SHEET 1 OF 1 | REV A