MIAMI-DADE

MIAMI-DADE COUNTY, FLORIDA
METRO-DADE FLAGLER BUILDING

BUILDING CODE COMPLIANCE OFFICE
METRO-DADE FLAGLER BUILDING
140 WEST FLAGLER STREET, SUITE 1603
MIAMI, FLORIDA 33130-1563
(305) 375-2901 FAX (305) 375-2908

CONTRACTOR LICENSING SECTION
(305) 375-2527 FAX (305) 375-2558

CONTRACTOR ENFORCEMENT DIVISION
(305) 375-2966 FAX (305) 375-2908

PRODUCT CONTROL DIVISION
(305) 375-2902 FAX (305) 372-6339

PRODUCT CONTROL NOTICE OF ACCEPTANCE

Yale Ogron Manufacturing Co., Inc.
671 West 18 Street
Hialeah ,FL 33010

Your application for Notice of Acceptance (NOA) of:
Series 1800 Aluminum French Door w/Sidelites Impact
under Chapter 8 of the Code of Miami-Dade County governing the use of Alternate Materials and Types of Construction, and completely described herein, has been recommended for acceptance by the Miami-Dade County Building Code Compliance Office (BCCO) under the conditions specified herein.

This NOA shall not be valid after the expiration date stated below. BCCO reserves the right to secure this product or material at any time from a jobsite or manufacturer's plant for quality control testing. If this product or material fails to perform in the approved manner, BCCO may revoke, modify, or suspend the use of such product or material immediately. BCCO reserves the right to revoke this approval, if it is determined by BCCO that this product or material fails to meet the requirements of the South Florida Building Code.

The expense of such testing will be incurred by the manufacturer.

ACCEPTANCE NO.: 01-1016.03
EXPIRES: 01/03/2007

Raul Rodriguez
Chief Product Control Division

THIS IS THE COVERSHEET, SEE ADDITIONAL PAGES FOR SPECIFIC AND GENERAL CONDITIONS
BUILDING CODE & PRODUCT REVIEW COMMITTEE

This application for Product Approval has been reviewed by the BCCO and approved by the Building Code and Product Review Committee to be used in Miami-Dade County, Florida under the conditions set forth above.

Francisco J. Quintana, R.A.
Director
Miami-Dade County
Building Code Compliance Office

APPROVED: 01/03/2002

NOTICE OF ACCEPTANCE: SPECIFIC CONDITIONS

1. SCOPE

1.1 This Notice of Acceptance (NOA) approves an aluminum French door with sidelites, as described in Section 2 of this NOA, designed to comply with the South Florida Building Code (SFBC), 1994 Edition for Miami-Dade County, for the locations where the pressure requirements, as determined by SFBC Chapter 23, do not exceed the Design Pressure Rating values indicated in the approved drawings.

2. PRODUCT DESCRIPTION

2.1 The **Series 1800 Aluminum French Door w/ Sideletes** and its components shall be constructed in strict compliance with the following document: Drawing No **W01-64**, Sheets 1 through 5 of 5, titled "Series 1800 Aluminum French Door w/ Sideletes", prepared by AL-FAROOQ CORPORATION, dated 9/17/01, with revision date 11/09/01, signed and sealed by Humayoun Farooq, bearing the Miami-Dade County Product Control approval stamp with the NOA number and approval date by the Miami-Dade County Product Control Division. This document shall hereinafter be referred to as the approved drawings.

3. LIMITATIONS

3.1 This approval applies to single unit applications only, as shown in approved drawings.

4. INSTALLATION

4.1 The Series 1800 Aluminum French Door w/ Sideletes and its components shall be installed in strict compliance with the approved drawings.

4.2 Hurricane protection system (shutters): the installation of this unit **will not require** a hurricane protection system.

5. LABELING

5.1 Each unit shall bear a permanent label with the manufacturer's name or logo, city, state and following statement: "Miami-Dade County Product Control Approved".

6. BUILDING PERMIT REQUIREMENTS

6.1 Application for building permit shall be accompanied by copies of the following:

- **6.1.1** This Notice of Acceptance
- **6.1.2** Duplicate copies of the approved drawings, as identified in Section 2 of this Notice of Acceptance, clearly marked to show the components selected for the proposed installation.
- **6.1.3** Any other documents required by the Building Official or the South Florida Building Code (SFBC) in order to properly evaluate the installation of this system.

Raul Rodriguez, Chief
Product Control Division

Yale Ogron Manufacturing Co. Inc.

ACCEPTANCE No.: **01-1016.03**

APPROVED: **January 3, 2002**

EXPIRES: **January 3, 2007**

NOTICE OF ACCEPTANCE: STANDARD CONDITIONS

1. Renewal of this Acceptance (approval) shall be considered after a renewal application has been filed and the original submitted documentation, including test supporting data, engineering documents, are no older than eight (8) years.

2. Any and all approved products shall be permanently labeled with the manufacturer's name, city, state, and the following statement: "Miami-Dade County Product Control Approved", or as specifically stated in the specific conditions of this Acceptance.

3. Renewals of Acceptance will not be considered if:
   a) There has been a change in the South Florida Building Code affecting the evaluation of this product and the product is not in compliance with the code changes;
   b) The product is no longer the same product (identical) as the one originally approved;
   c) If the Acceptance holder has not complied with all the requirements of this acceptance, including the correct installation of the product;
   d) The engineer who originally prepared, signed and sealed the required documentation initially submitted is no longer practicing the engineering profession.

4. Any revision or change in the materials, use, and/or manufacture of the product or process shall automatically be cause for termination of this Acceptance, unless prior written approval has been requested (through the filing of a revision application with appropriate fee) and granted by this office.

5. Any of the following shall also be grounds for removal of this Acceptance:
   a) Unsatisfactory performance of this product or process.
   b) Misuse of this Acceptance as an endorsement of any product, for sales, advertising or any other purpose.

6. The Notice of Acceptance number preceded by the words Miami-Dade County, Florida, and followed by the expiration date may be displayed in advertising literature. If any portion of the Notice of Acceptance is displayed, then it shall be done in its entirety.

7. A copy of this Acceptance as well as approved drawings and other documents, where it applies, shall be provided to the user by the manufacturer or its distributors and shall be available for inspection at the job site at all time. The engineer need not reseal the copies.

8. Failure to comply with any section of this Acceptance shall be cause for termination and removal of Acceptance.

9. This Notice of Acceptance consists of pages 1, 2 and this last page 3.

END OF THIS ACCEPTANCE

Raul Rodriguez, Chief
Product Control Division

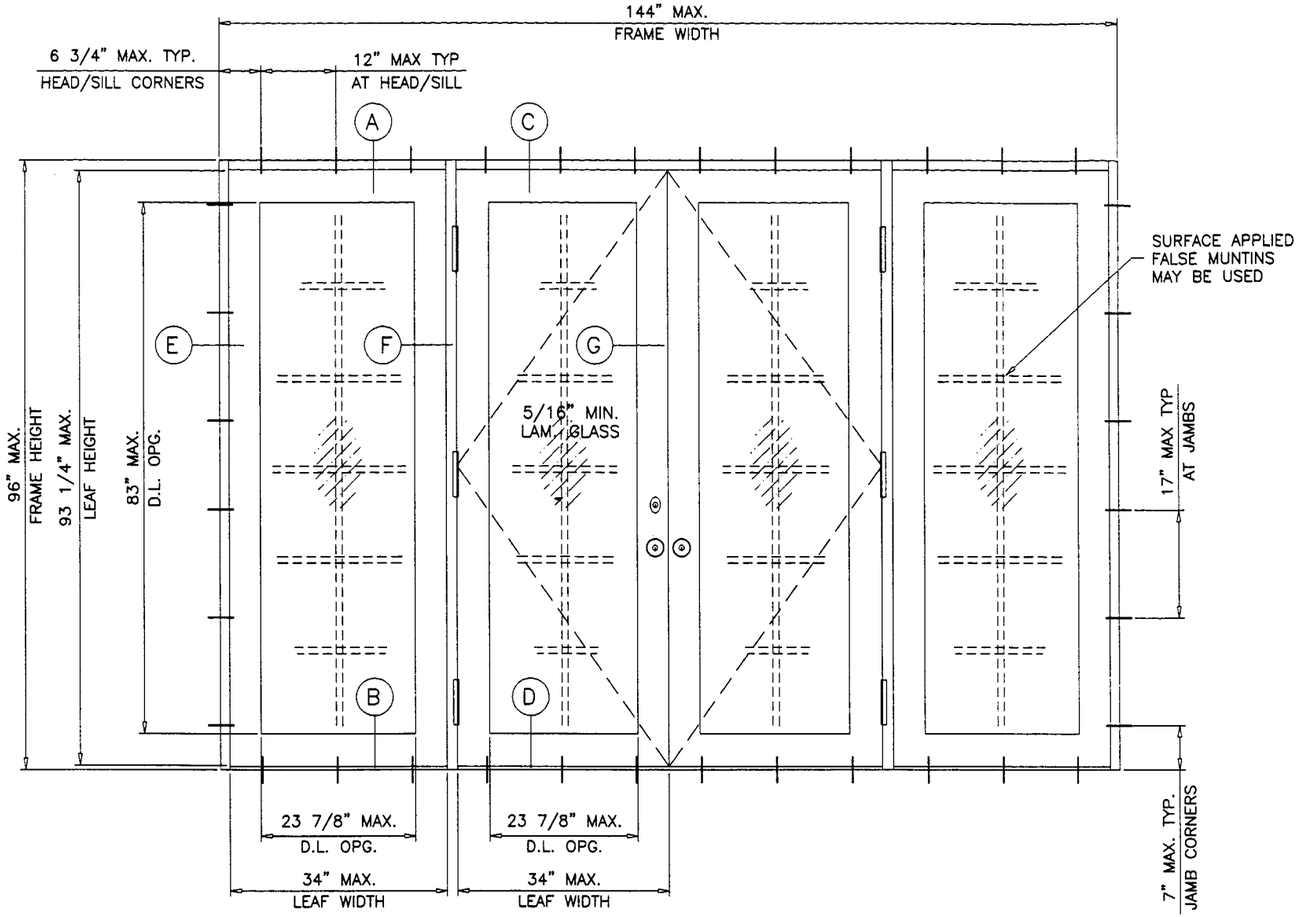

TYPICAL ELEVATION

(OXXO) TESTED UNIT

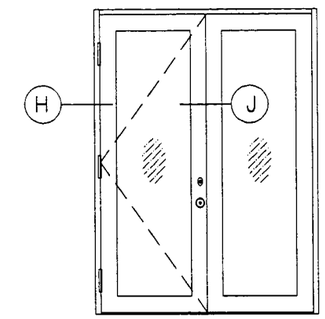

MAXIMUM DESIGN LOAD RATING = + 65.0 PSF
(FOR SIZES SHOWN OR SMALLER) − 65.0 PSF

APPROVAL APPLIES TO SINGLE (X) AND DOUBLE (XX) LEAF DOORS WITH OR WITHOUT SIDELITES.
THE SIDELITES CAN BE ONE OR BOTH SIDES OF DOORS.
ALSO FIXED LITES OF SINGLE (O) UNITS.

DOORS/SIDELITES GLAZED WITH LAMINATED GLASS RATED FOR LARGE MISSILE IMPACT AND REQUIRE NO SHUTTERS.

THIS PRODUCT IS DESIGNED AS PER THE SOUTH FLORIDA BUILDING CODE 1994 EDITION FOR DADE COUNTY. ALSO FOR WIND LOADS AS PER ASCE 7 USING CORRESPONDING LOADS.

WOOD BUCKS BY OTHERS, MUST BE ANCHORED PROPERLY TO TRANSFER LOADS TO THE STRUCTURE.

ANCHORS SHALL BE AS LISTED, SPACED AS SHOWN ON DETAILS. ANCHOR EMBEDMENT TO BASE MATERIAL SHALL BE BEYOND WALL DRESSING OR STUCCO.

ANCHORING OR LOADING CONDITIONS NOT SHOWN IN THESE DETAILS ARE NOT PART OF THIS APPROVAL.

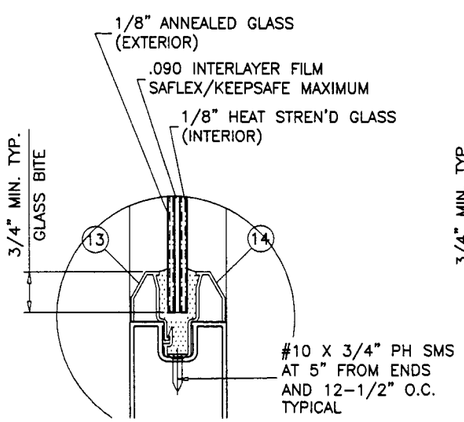

5/16" OVERALL LAM. GLASS
LAMINATED BY
'ARCH ALUMINUM'

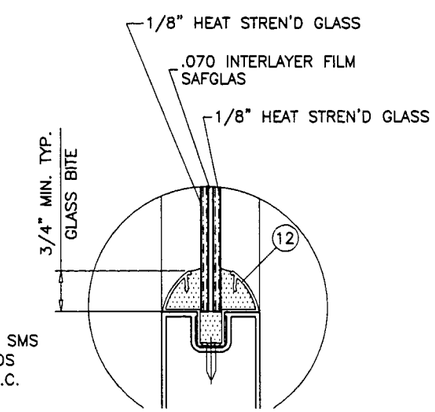

5/16" OVERALL LAM. GLASS
LAMINATED BY
'SECURITY IMPACT GLASS'

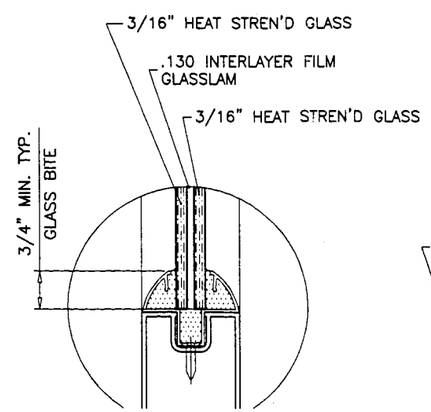

1/2" OVERALL LAM. GLASS
LAMINATED BY
'UNITED GLASS LAMINATING'

GLAZING OPTIONS

LARGE MISSILE IMPACT RESISTANT DOORS, SHUTTERS NOT REQUIRED

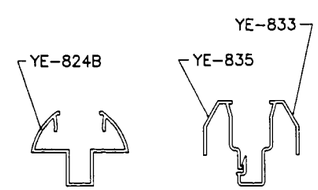

GLAZING ADAPTER OPTIONS

Engr: DR. HUMAYOUN FAROOQ
STRUCTURES
FLA. PE # 16557

DEC 1 1 2001

APPROVED AS COMPLYING WITH THE
SOUTH FLORIDA BUILDING CODE
DATE JAN. 3 2002
BY
PRODUCT CONTROL DIVISION
BUILDING CODE COMPLIANCE OFFICE
ACCEPTANCE NO. 01-1016.03

AL-FAROOQ CORPORATION
ENGINEERS, PLANNERS & PRODUCT DESIGN
1235 SW 87 AVE
MIAMI, FLORIDA 33174
TEL. (305) 264-8100 FAX. (305) 262-6978

COMP-ANL\W01-64YO

SERIES 1800 ALUM FRENCH DOOR W/ SIDELITES

YALE OGRON MFG. CO. INC.
671 WEST 18TH ST.
HIALEAH, FL. 33010-2480
TEL. (305) 887-2646 FAX (305) 883-1309

revisions:			
no	date	by	description
A	11.09.01		REV. PER BCCO COMMENTS

date: 09-17-01	scale: 1/2"=1'-0"	dr. by: HAMID	chk. by:

drawing no. W01-64

sheet 1 of 5

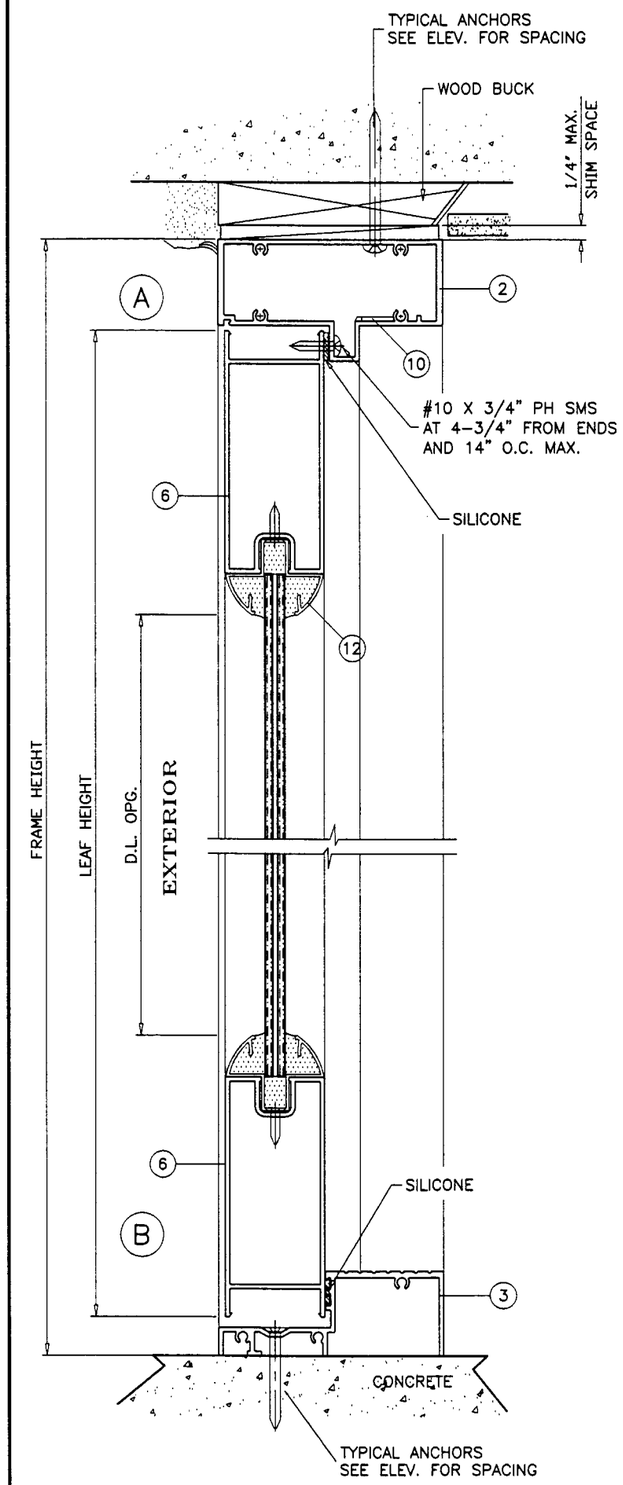

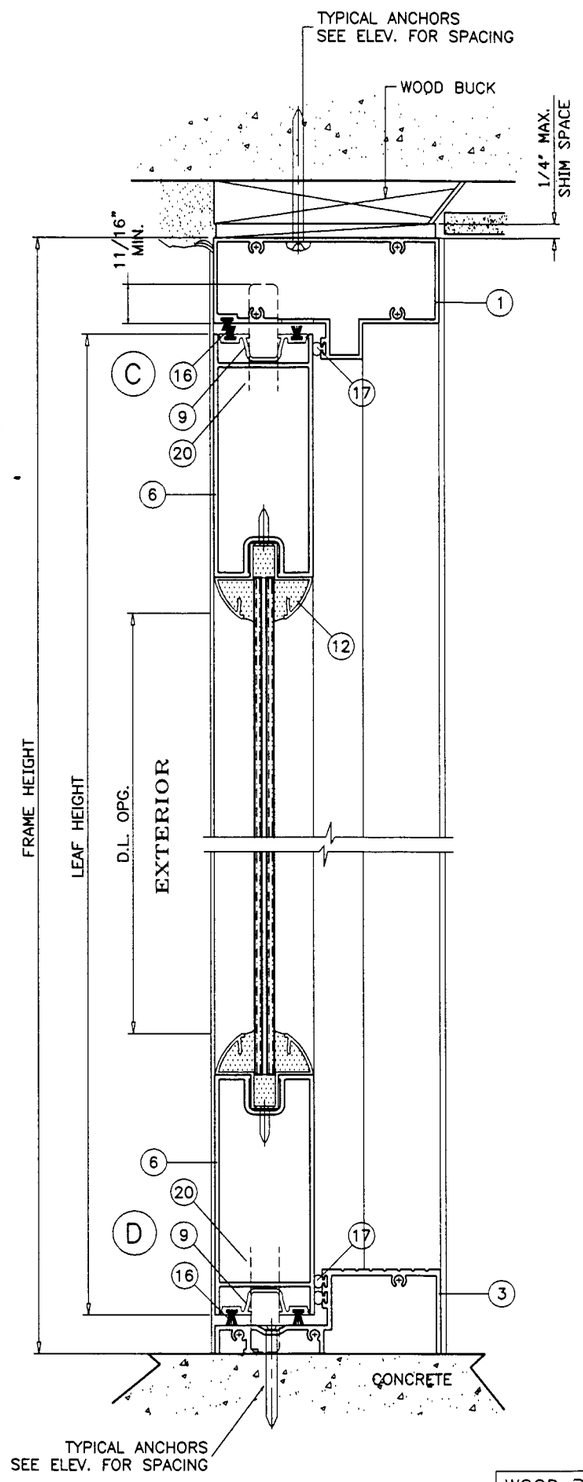

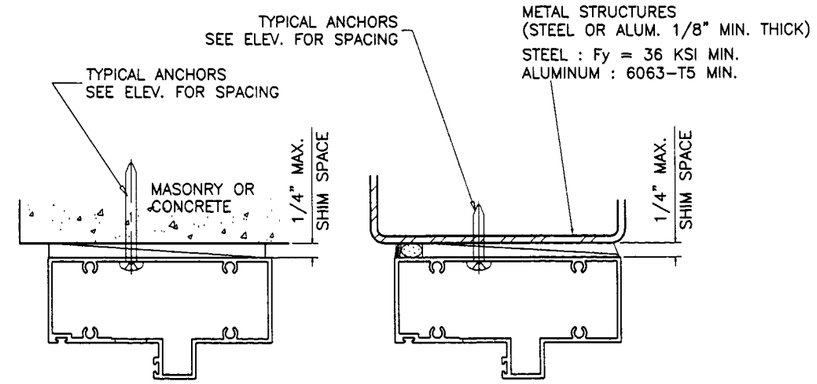

TYPICAL ANCHORS: SEE ELEV. FOR SPACING

1/4" DIA. TAPCONS

INTO 2BY WOOD BUCKS OR WOOD STRUCTURE
1-3/4" MIN. TOTAL EMBED. (WOOD+SUBSTRATE)

THRU 1BY WOOD BUCKS INTO MASONRY OR DIRECTLY INTO MASONRY
1-1/4" MIN. EMBED INTO MASONRY

1/4" TEKS OR SELF DRILLING SCREWS

INTO METAL STRUCTURES (1/8" MIN. THICKNESS)
(1/4" MAX. SHIM SPACE)

#14 SMS OR SELF DRILLING SCREWS

INTO DADE COUNTY APPROVED MULLIONS
(NO SHIM SPACE)

SEALANTS:

FRAME AND LEAF CORNERS, INSTALLATION SCREWS AT SILL AND ALL METAL PARTS CONNECTIONS SEALED WITH CLEAR COLORED SILICONE.

HINGES:

EXTRUDED ALUMINUM BUTT HINGE
1/8" THICK AND 7-1/2" LONG WITH 5/16" STAINLESS STEEL ROD AT EACH LEAF JAMB STILE ONE EACH AT 10-5/8" FROM TOP & BOTTOM AND ONE AT MIDSPAN

LOCKS:

STANDARD STEEL DEAD BOLT LOCK BY KWIKSET/WESLOCK
KEY OPERATED ON EXTERIOR AND THUMB TURN ON INTERIOR
AT EACH ACTIVE LEAF LOCK STILE, 41-3/4" FROM BOTTOM

CONVENTIONAL LOCKSET WITH KNOB BY HARLOCK/WESLOCK
KEY OPERATED ON EXTERIOR AND THUMB TURN ON INTERIOR
AT EACH ACTIVE LEAF LOCK STILE, 34-7/8" FROM BOTTOM

MANUALLY OPERATED CONCEALED FLUSH BOLTS
AT TOP & BOTTOM OF EACH LEAF LOCK STILE

(FLUSH BOLTS AT TOP & BOTTOM OF ACTIVE AND INACTIVE LEAFS
TO BE ENGAGED DURING PERIODS OF HURRICANE WARNING)

WOOD BUCKS NOT BY YALE OGRON, MUST SUSTAIN LOADS IMPOSED BY GLAZING SYSTEM AND TRANSFER THEM TO THE BUILDING STRUCTURE.

Engr: DR. HUMAYOUN FAROOQ
STRUCTURES
FLA. PE # 16557

DEC 1 1 2001

JAN. 3, 2002

01-1016.03

AL-FAROOQ CORPORATION
ENGINEERS, PLANNERS & PRODUCT DESIGN
1235 SW 87 AVE
MIAMI, FLORIDA 33174
TEL. (305) 264-8100 FAX. (305) 262-6978

COMP-ANL\W01-64YO

SERIES 1800 ALUM FRENCH DOOR W/ SIDELITES

YALE OGRON MFG. CO. INC.
671 WEST 18TH ST.
HIALEAH, FL. 33010-2480
TEL. (305) 887-2646 FAX (305) 883-1309

revisions:			
no	date	by	description

date: 09-17-01
scale: 3/8" = 1"
dr. by: HAMID
chk. by:

drawing no.
W01-64

sheet 2 of 5

WOOD BUCKS NOT BY YALE OGRON, MUST SUSTAIN LOADS IMPOSED BY GLAZING SYSTEM AND TRANSFER THEM TO THE BUILDING STRUCTURE.

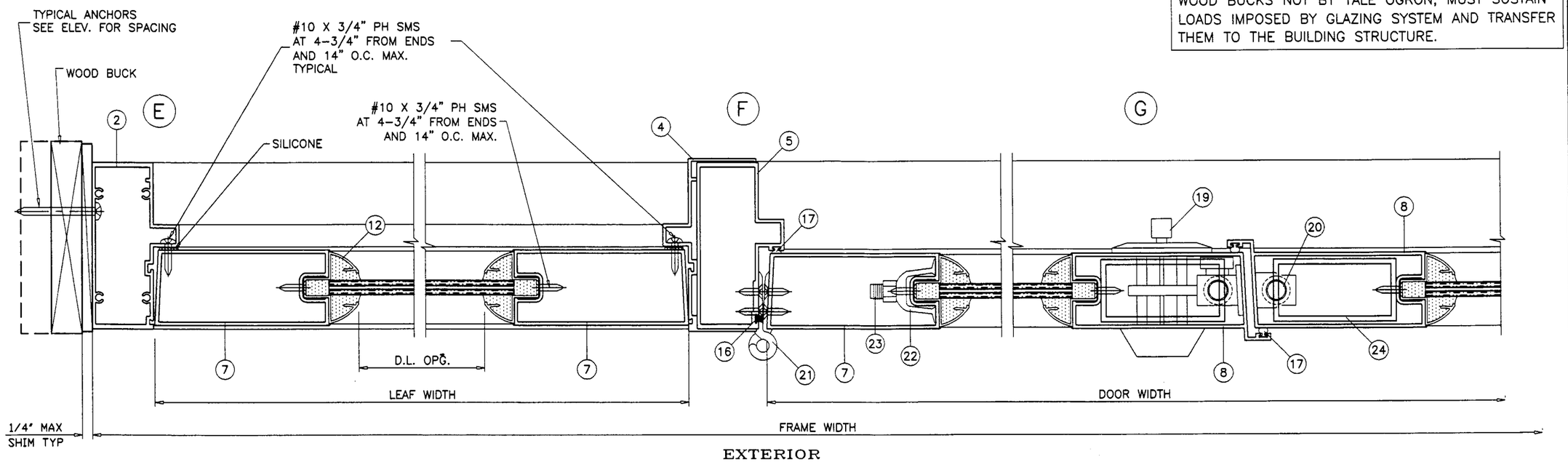

EXTERIOR

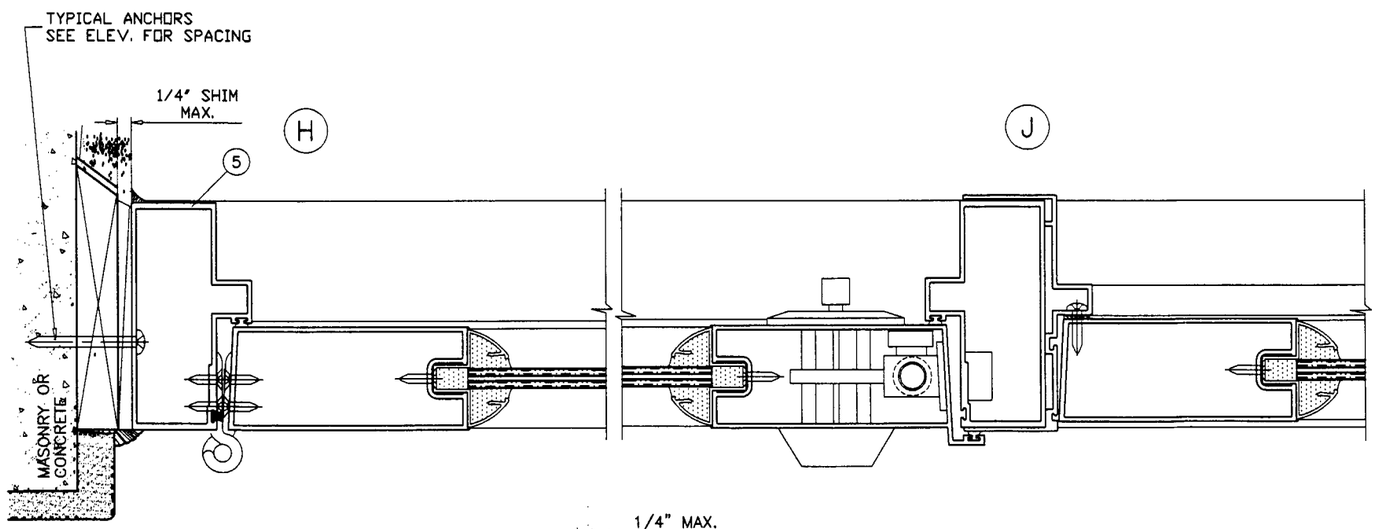

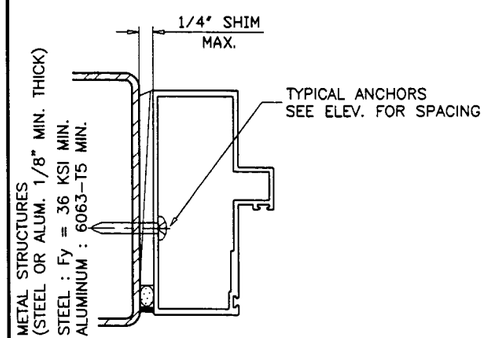

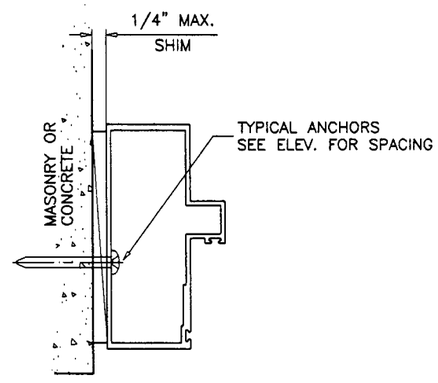

Engr: DR. HUMAYOUN FAROOQ
STRUCTURES
FLA. PE # 16557

DEC 1 1 2001

APPROVED AS COMPLYING WITH THE
SOUTH FLORIDA BUILDING CODE
DATE JAN 3, 2002
BY
PRODUCT CONTROL DIVISION
BUILDING CODE COMPLIANCE OFFICE
ACCEPTANCE NO. 01-1016.03

AL-FAROOQ CORPORATION
ENGINEERS, PLANNERS & PRODUCT DESIGN
1235 SW 87 AVE
MIAMI, FLORIDA 33174
TEL. (305) 264-8100 FAX. (305) 262-6978

COMP-ANL\W01-64YO

SERIES 1800 ALUM FRENCH DOOR W/ SIDELITES

YALE OGRON MFG. CO. INC.
671 WEST 18TH ST.
HIALEAH, FL. 33010-2480
TEL. (305) 887-2646 FAX (305) 883-1309

revisions:

no	date	by	description

date: 09-17-01
scale: 3/8" = 1"
dr. by: HAMID
chk. by:

drawing no.
W01-64

sheet 3 of 5

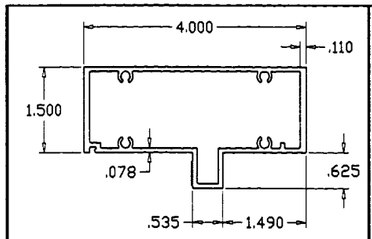

(2) SIDELITE FRAME

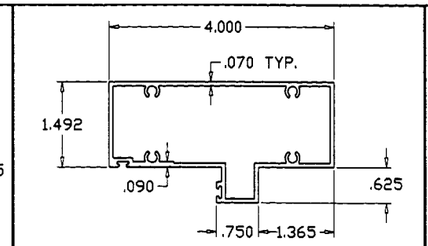

(1) DOOR FRAME HEAD

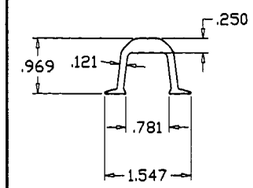

(22) PRESSURE PLATE

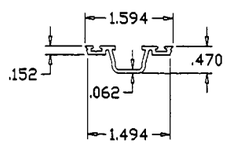

(9) SNAP CAP

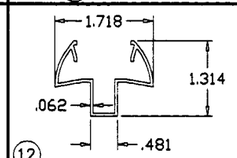

(12) GLAZING CHANNEL

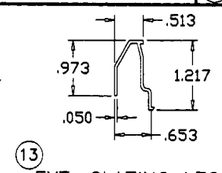

(13) EXT. GLAZING LEG

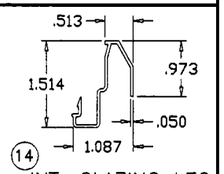

(14) INT. GLAZING LEG

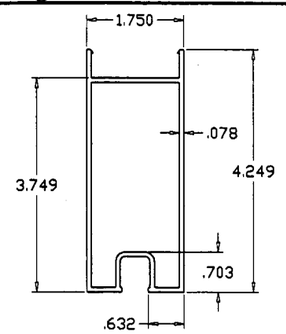

(6) TOP/BOTTOM RAIL

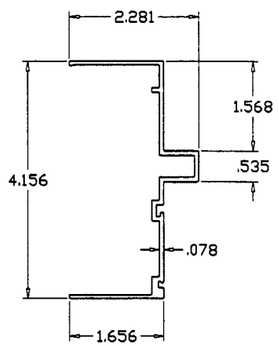

(4) SIDE LITE JAMB

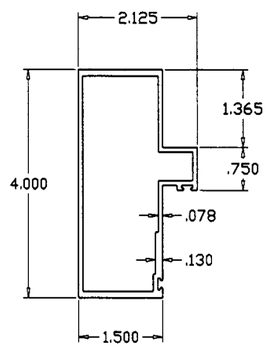

(5) DOOR FRAME JAMB

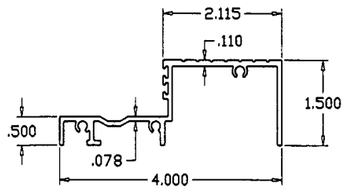

(3) THRESHOLD

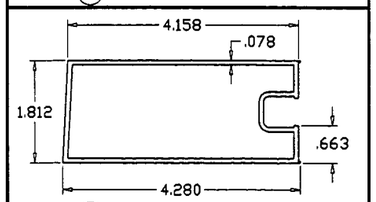

(7) HINGE STILE

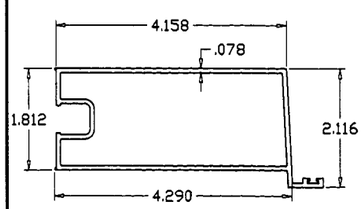

(8) LOCK STILE

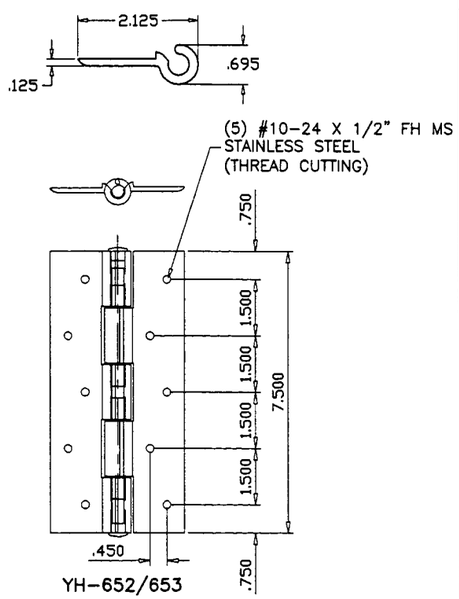

HINGE

ITEM #	PART #	REQD.	DESCRIPTION	MATERIAL	MANF./SUPPLIER/REMARKS
1	YE-832B	1	DOOR FRAME HEAD	6063-T5	-
2	YE-809	AS REQD.	SIDELITE FRAME	6063-T5	-
3	YE-810	1	THRESHOLD	6063-T5	-
4	YE-808	AS REQD.	SIDELITE - MULLION	6063-T5	-
5	YE-811	AS REQD.	FRAME JAMB	6063-T5	-
6	YE-801	2/ LEAF	DOOR LEAF SILL & HEAD	6063-T5	-
7	YE-803	1	DOOR LEAF JAMB - HINGE SIDE	6063-T5	-
8	YE-802	1	DOOR LEAF - LOCK SIDE	6063-T5	-
9	YE-831	2/ LEAF	SNAP CAP FOR DOOR LEAF & SILL	6063-T5	-
10	YE-816	AS REQD.	COVER PLATE	6063-T5	-
11	-	-	-	-	-
12	YE-824B	4/ LEAF	GLAZING CHANNEL	-	-
13	YE-835	AS REQD.	EXTERIOR GLAZING LEG	6063-T5	-
14	YE-833	AS REQD.	INTERIOR GLAZING LEG	6063-T5	-
15	-	-	-	-	-
16	YE-602	AS REQD.	WOOL FIN WEATHERSTRIPPING (.187 X .260)	-	ULTRAFAB
17	YH-622	AS REQD.	BULB WEATHERSTRIPPING (.198 X .260)	-	TEAM PLASTIC
18	-	-	-	-	-
19	YH-615	1	LOCK SET BY HARLOC OR WESTLOCK	-	-
20	YH-610	AS REQD.	FLUSH BOLT BY DELTA IND.	ZINC	DIECAST
21	-	3/ LEAF	BUTT HINGES, AT 10-5/8" FROM ENDS & MIDSPAN	ALUMINUM	WITH SS PIN
22	YE-805	4/ LEAF	PRESSURE PLATE-TIE ROD	6063-T5	2-1/2" LONG
23	YH-630	2/ LEAF	3/8" DIA. THREADED ROD	STEEL	-
24	-	1/ LOCK ST.	REINFORCING TUBE, FULL LENGTH OF PANEL	ALUMINUM	1-1/2" X 3" X 1/8"

Engr: DR. HUMAYOUN FAROOQ
STRUCTURES
FLA. PE # 16557

DEC 1 1 2001

JAN 3, 2002

01-1066.03

AL-FAROOQ CORPORATION
ENGINEERS, PLANNERS & PRODUCT DESIGN
1235 SW 87 AVE
MIAMI, FLORIDA 33174
TEL. (305) 264-8100 FAX. (305) 262-6978

COMP-ANL\W01-64YO

SERIES 1800 ALUM FRENCH DOOR W/ SIDELITES

YALE OGRON MFG. CO. INC.
671 WEST 18TH ST.
HIALEAH, FL. 33010-2480
TEL. (305) 887-2646 FAX (305) 883-1309

revisions:		
no	date	by description

date: 09-17-01
scale: 3/8" = 1"
dr. by: HAMID
chk. by:

drawing no. W01-64

sheet 4 of 5

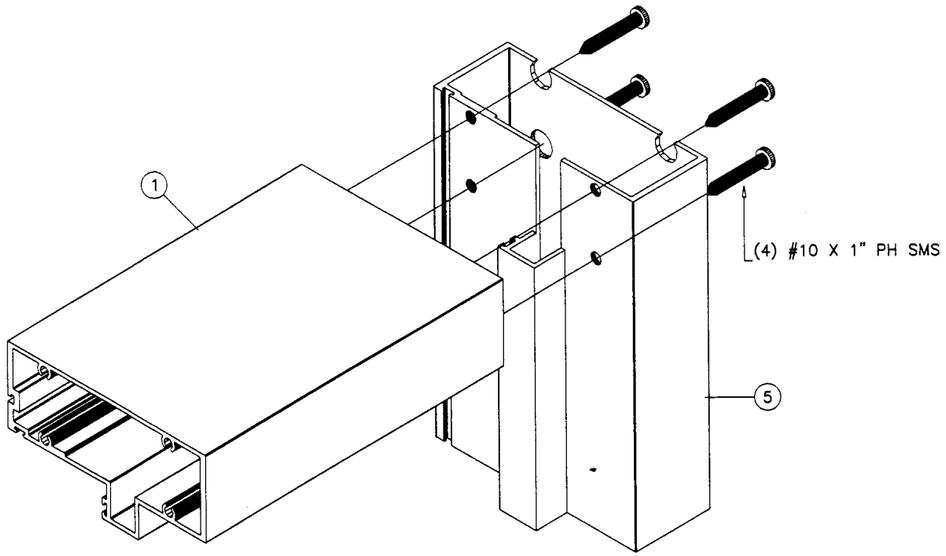

FRAME UPPER CORNER

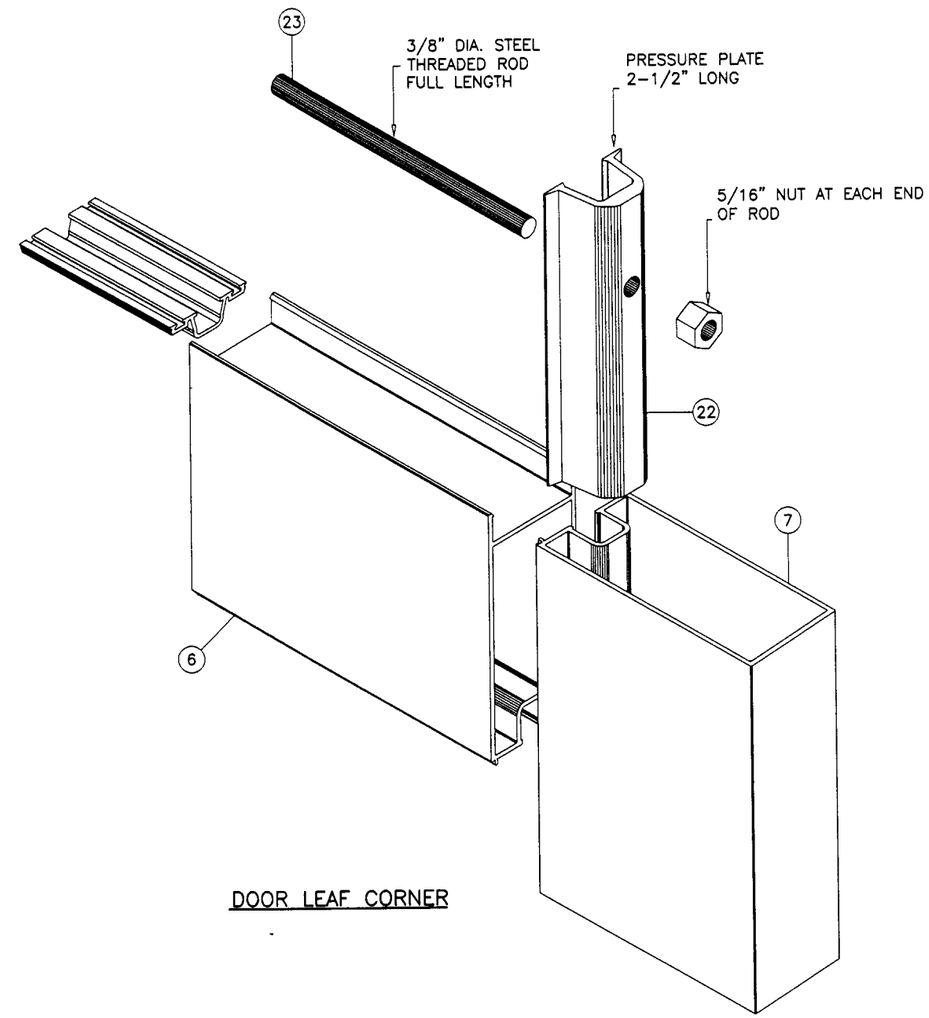

DOOR LEAF CORNER

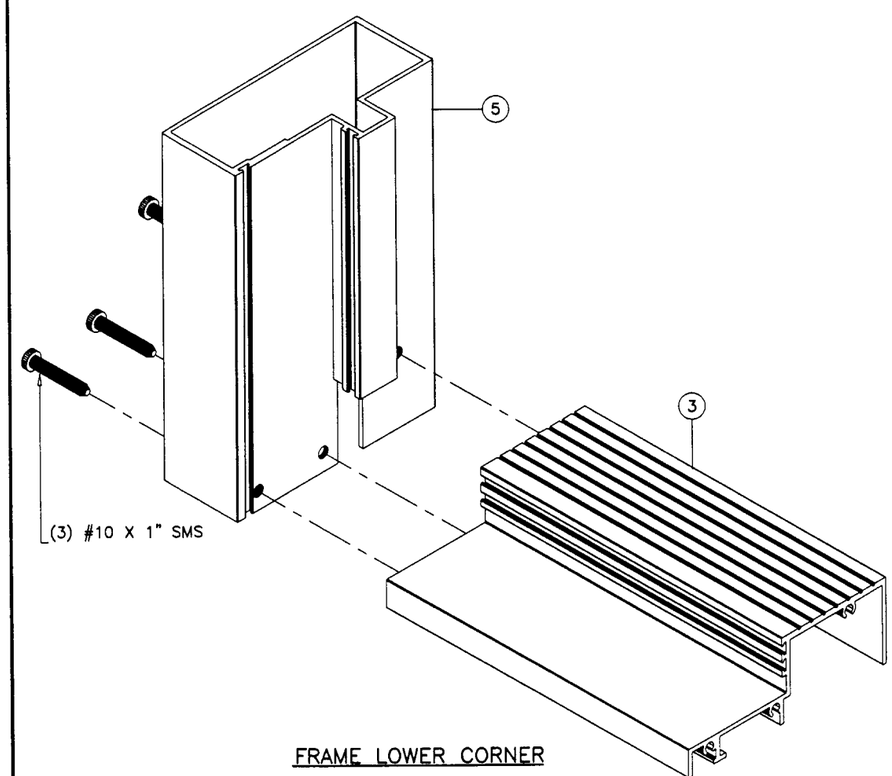

FRAME LOWER CORNER

Engr: DR. HUMAYOUN FAROOQ
STRUCTURES
FLA. PE # 16557

DEC 1 1 2001

JAN. 3, 2002

01-1016.03

AL-FAROOQ CORPORATION
ENGINEERS, PLANNERS & PRODUCT DESIGN
1235 SW 87 AVE
MIAMI, FLORIDA 33174
TEL. (305) 264-8100 FAX. (305) 262-6978
COMP-ANL\W01-64YO

SERIES 1800 ALUM FRENCH DOOR W/ SIDELITES

YALE OGRON MFG. CO. INC.
671 WEST 18TH ST.
HIALEAH, FL. 33010-2480
TEL. (305) 887-2646 FAX (305) 883-1309

revisions:

no	date	by	description

date: 09-17-01
scale: 3/8" = 1"
dr. by: HAMID
chk. by:

drawing no.
W01-64

sheet 5 of 5