MIAMI-DADE COUNTY, FLORIDA
METRO-DADE FLAGLER BUILDING

BUILDING CODE COMPLIANCE OFFICE
METRO-DADE FLAGLER BUILDING
140 WEST FLAGLER STREET, SUITE 1603
MIAMI, FLORIDA 33130-1563
(305) 375-2901 FAX (305) 375-2908

CONTRACTOR LICENSING SECTION
(305) 375-2527 FAX (305) 375-2558

CONTRACTOR ENFORCEMENT DIVISION
(305) 375-2966 FAX (305) 375-2908

PRODUCT CONTROL DIVISION
(305) 375-2902 FAX (305) 372-6339

PRODUCT CONTROL NOTICE OF ACCEPTANCE

Therma-Tru Corporation
1687 Woodlands Drive
Maumee ,OH 43537

Your application for Notice of Acceptance (NOA) of:
Therma -Tru Series " BTS, TCM, PVC, SMC" Lite Frames
under Chapter 8 of the Code of Miami-Dade County governing the use of Alternate Materials and Types of Construction, and completely described herein, has been recommended for acceptance by the Miami-Dade County Building Code Compliance Office (BCCO) under the conditions specified herein.

This NOA shall not be valid after the expiration date stated below. BCCO reserves the right to secure this product or material at any time from a jobsite or manufacturer's plant for quality control testing. If this product or material fails to perform in the approved manner, BCCO may revoke, modify, or suspend the use of such product or material immediately. BCCO reserves the right to revoke this approval, if it is determined by BCCO that this product or material fails to meet the requirements of the South Florida Building Code.

The expense of such testing will be incurred by the manufacturer.

ACCEPTANCE NO.: 01-1120.08
EXPIRES: 01/18/2007

Raul Rodriguez
Chief Product Control Division

THIS IS THE COVERSHEET, SEE ADDITIONAL PAGES FOR SPECIFIC AND GENERAL CONDITIONS
BUILDING CODE & PRODUCT REVIEW COMMITTEE

This application for Product Approval has been reviewed by the BCCO and approved by the Building Code and Product Review Committee to be used in Miami-Dade County, Florida under the conditions set forth above.

Francisco J. Quintana, R.A.
Director
Miami-Dade County
Building Code Compliance Office

APPROVED: 01/18/2002

NOTICE OF ACCEPTANCE: SPECIFIC CONDITIONS

1. SCOPE

1.1 This approves a plastic lite frame component, as described in Section 2 of this NOA, designed to comply with the South Florida Building Code (SFBC), 1994 Edition for Miami-Dade County, for the locations where the pressure requirements, as determined by SFBC Chapter 23, do not exceed the Design Pressure Rating values indicated in the approved drawings.

2. PRODUCT DESCRIPTION

2.1 The **Therma Tru Plastic Lite Frame, BTS, TCM, PVC & SMC** and its components shall be constructed in strict compliance with the following document: Drawing No **S-2156-A1**, Sheets 1 through 4 of 4, titled "Plastic Lite Frame Component Approval," prepared by RW Building Consultants, Inc., dated 8/14/01 and revised on 12/17/01, bearing the Miami-Dade County Product Control approval stamp with the NOA number and approval date by the Miami-Dade County Product Control Division. This document shall hereinafter be referred to as the approved drawings.

3. LIMITATIONS

3.1 This approval does not include an elevation of structural performance of this component. Test reports and other required documents shall be submitted to Dade County Product Control, showing that the systems using the plastic lite frames will resist the loads according to Chapter 23 of the S.F.B.C., in order to issue a specific approval for the system.

4. INSTALLATION

4.1 The plastic lite frame shall be fabricated in strict compliance with the manufacturer's instructions, the approved drawing and the applicable Section of the South Florida Building Code.

5. LABELING

5.1 Each unit shall bear a permanent label with the manufacturer's name or logo, city, state and following statement: "Miami-Dade County Product Control Approved".

6. BUILDING PERMIT REQUIREMENTS

6.1 Application for building permit shall be accompanied by copies of the following:

6.1.1 This Notice of Acceptance

6.1.2 Duplicate copies of the approved drawings, as identified in Section 2 of this Notice of Acceptance, clearly marked to show the components selected for the proposed installation.

6.1.3 Any other documents required by the Building Official or the South Florida Building Code (SFBC) in order to properly evaluate the installation of this system.

Raul Rodriguez, Chief
Product Control Division

Therma-Tru

ACCEPTANCE No.: 01-1120.08

APPROVED: January 18, 2002

EXPIRES: January 18, 2007

NOTICE OF ACCEPTANCE: STANDARD CONDITIONS

1. Renewal of this Acceptance (approval) shall be considered after a renewal application has been filed and the original submitted documentation, including test supporting data, engineering documents, are no older than eight (8) years.

2. Any and all approved products shall be permanently labeled with the manufacturer's name, city, state, and the following statement: "Miami-Dade County Product Control Approved", or as specifically stated in the specific conditions of this Acceptance.

3. Renewals of Acceptance will not be considered if:
   a) There has been a change in the South Florida Building Code affecting the evaluation of this product and the product is not in compliance with the code changes;
   b) The product is no longer the same product (identical) as the one originally approved;
   c) If the Acceptance holder has not complied with all the requirements of this acceptance, including the correct installation of the product;
   d) The engineer who originally prepared, signed and sealed the required documentation initially submitted is no longer practicing the engineering profession.

4. Any revision or change in the materials, use, and/or manufacture of the product or process shall automatically be cause for termination of this Acceptance, unless prior written approval has been requested (through the filing of a revision application with appropriate fee) and granted by this office.

5. Any of the following shall also be grounds for removal of this Acceptance:
   a) Unsatisfactory performance of this product or process.
   b) Misuse of this Acceptance as an endorsement of any product, for sales, advertising or any other purpose.

6. The Notice of Acceptance number preceded by the words Miami-Dade County, Florida, and followed by the expiration date may be displayed in advertising literature. If any portion of the Notice of Acceptance is displayed, then it shall be done in its entirety.

7. A copy of this Acceptance as well as approved drawings and other documents, where it applies, shall be provided to the user by the manufacturer or its distributors and shall be available for inspection at the job site at all time. The engineer need not reseal the copies.

8. Failure to comply with any section of this Acceptance shall be cause for termination and removal of Acceptance.

9. This Notice of Acceptance consists of pages 1, 2 and this last page 3.

END OF THIS ACCEPTANCE

Raul Rodriguez, Chief
Product Control Division

THERMA-TRU®

"PLASTICS LITE FRAME COMPONENT APPROVAL"

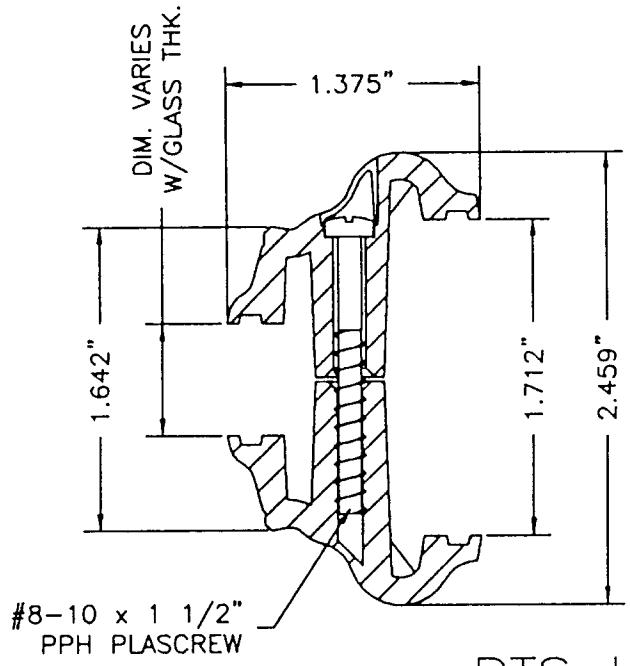

BTS LITE FRAME

Notes:

1. Plastic Type – Better Than Styrene (Therma-Tru's Polypropylene)
2. Color – White
3. Tensile Strength – 5,217 psi
4. Process – Injection molded as one piece
5. Mfg. Facility – Therma-Tru Mexico, Avenida Uniones S/N A.P. 87310, Parque Indutrial Del Norte H. Matamoros Mexico

TABLE OF CONTENTS	
SHEET #	DESCRIPTION
1	BTS LITE FRAME
2	TCM LITE FRAME
3	PVC LITE FRAME
4	SMC LITE FRAME

APPROVED AS COMPLYING WITH THE SOUTH FLORIDA BUILDING CODE
DATE January 18, 2002
BY
PRODUCT CONTROL DIVISION
BUILDING CODE COMPLIANCE OFFICE
ACCEPTANCE NO. 01-1120.08

THERMA-TRU CORPORATION
1687 WOODLANDS DRIVE
MAUMEE, OHIO
PH. (800) 537-8827

NO.	DATE	REVISIONS	BY
1.	12/17/01	ADD NOTES	RW

RW BUILDING CONSULTANTS, INC.
813.684.3831

DATE: 8/14/01
SCALE: N.T.S.
DWG. BY: TJH
CHK. BY: RW
DRAWING NO.: S-2156-A1
SHEET 1 OF 4

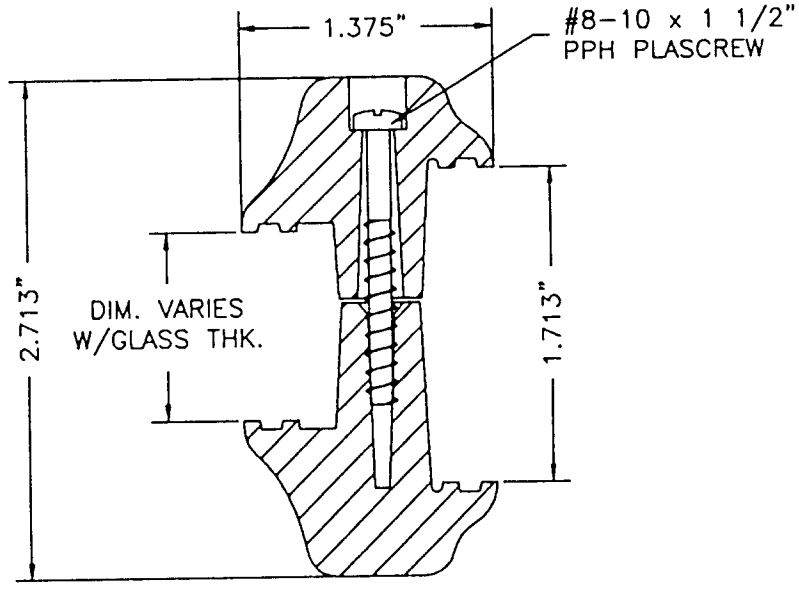

TCM LITE FRAME

Notes:

1. Plastic Type – Thermo Cellular Molding Compound (Therma-Tru's Polypropylene).
2. Color – Oak (Tan)
3. Tensile Strength – 4,674 psi
4. Process – Injection molded as one piece
5. Mfg. Facility – Therma-Tru Mexico, Avenida Uniones S/N A.P. 87310
   Parque Industrial Del Norte
   H. Matamoros Mexico

APPROVED AS COMPLYING WITH THE
SOUTH FLORIDA BUILDING CODE
DATE January 10, 2002
BY
PRODUCT CONTROL DIVISION
BUILDING CODE COMPLIANCE OFFICE
ACCEPTANCE NO. 01-1120.09

THERMA-TRU CORPORATION
1687 WOODLANDS DRIVE
MAUMEE, OHIO
PH. (800) 537-8827

NO.	DATE	REVISIONS	BY
1.	12/17/01	ADD NOTES	RW

RW BUILDING CONSULTANTS, INC.
813.684.3831

DATE:	8/14/01
SCALE:	N.T.S.
DWG. BY:	TJH
CHK. BY:	RW
DRAWING NO.:	S-2156-A1
SHEET	2 OF 4

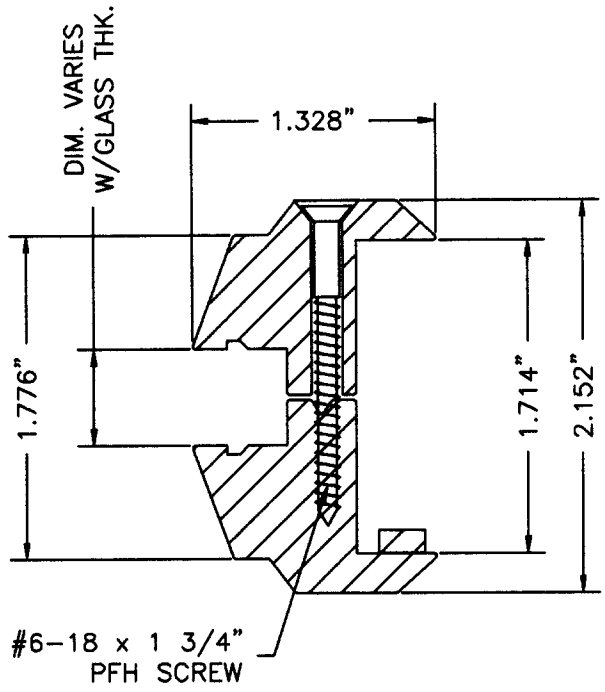

PVC LITE FRAME

APPROVED AS COMPLYING WITH THE
SOUTH FLORIDA BUILDING CODE
DATE January 18, 2002
BY
PRODUCT CONTROL DIVISION
BUILDING CODE COMPLIANCE OFFICE
ACCEPTANCE NO. 01-1120.08

Notes:

1. Plastic Type – Polyvinyl Chloride (non-painted)
2. Color – (unpainted)
3. Tensile Strength – 2,145 psi
4. Process – Lineal extrusions mitered and stapled at corners
5. Mfg. Facility – Therma-Tru Mexico, Avenida Uniones S/N A.P. 87310
   Parque Industrial Del Norte
   H. Matamoros Mexico

THERMA-TRU CORPORATION
1687 WOODLANDS DRIVE
MAUMEE, OHIO
PH. (800) 537-8827

NO.	DATE	REVISIONS	BY
1.	12/17/01	ADD NOTES	RW

RW BUILDING CONSULTANTS, INC.
813.684.3831

DATE: 8/14/01
SCALE: N.T.S.
DWG. BY: TJH
CHK. BY: RW
DRAWING NO.: S-2156-A1
SHEET 3 OF 4

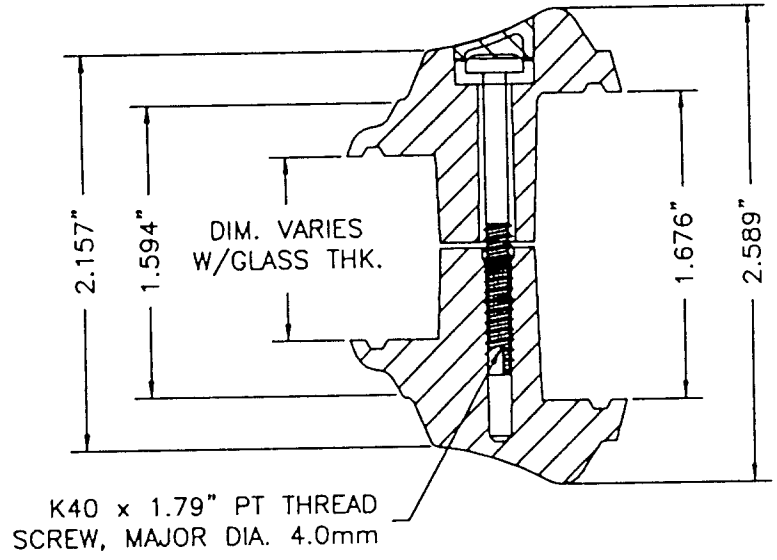

SMC LITE FRAME

Notes:

1. Plastic Type – Sheet Molding Compound – Glass reinforced Polyester (Therma–Tru's Fiberglass).
2. Color – Oak (Tan)
3. Tensile Strength – 6,200 psi
4. Process – Compression molded as one piece
5. Mfg. Facility – Therma–Tru Indiana, 108 Mutzfeld Road, Butler Indiana 46721

APPROVED AS COMPLYING WITH THE
SOUTH FLORIDA BUILDING CODE
DATE January 18, 2002
BY
PRODUCT CONTROL DIVISION
BUILDING CODE COMPLIANCE OFFICE
ACCEPTANCE NO. 01-1120.08

THERMA-TRU CORPORATION
1687 WOODLANDS DRIVE
MAUMEE, OHIO
PH. (800) 537-8827

NO.	DATE	REVISIONS	BY
1.	12/17/01	ADD NOTES	RW

RW BUILDING CONSULTANTS, INC.
813.684.3831

DATE: 8/14/01
SCALE: N.T.S.
DWG. BY: TJH
CHK. BY: RW
DRAWING NO.: S-2156-A1
SHEET 4 OF 4