MIAMI-DADE

BUILDING CODE COMPLIANCE OFFICE (BCCO)
PRODUCT CONTROL DIVISION

MIAMI-DADE COUNTY, FLORIDA
METRO-DADE FLAGLER BUILDING
140 WEST FLAGLER STREET, SUITE 1603
MIAMI, FLORIDA 33130-1563
(305) 375-2901 FAX (305) 375-2908

NOTICE OF ACCEPTANCE (NOA)

Therma-Tru Corp.
1687 Woodlands Drive
Maumee, OH 43537

SCOPE:
This NOA is being issued under the applicable rules and regulations governing the use of construction materials. The documentation submitted has been reviewed by Miami-Dade County Product Control Division and accepted by the Board of Rules and Appeals (BORA) to be used in Miami Dade County and other areas where allowed by the Authority Having Jurisdiction (AHJ).

This NOA shall not be valid after the expiration date stated below. The Miami-Dade County Product Control Division (In Miami Dade County) and/or the AHJ (in areas other than Miami Dade County) reserve the right to have this product or material tested for quality assurance purposes. If this product or material fails to perform in the accepted manner, the manufacturer will incur the expense of such testing and the AHJ may immediately revoke, modify, or suspend the use of such product or material within their jurisdiction. BORA reserves the right to revoke this acceptance, if it is determined by Miami-Dade County Product Control Division that this product or material fails to meet the requirements of the applicable building code.

This product is approved as described herein, and has been designed to comply with the High Velocity Hurricane Zone of the Florida Building Code.

DESCRIPTION: Series "Classic Craft" 8'0 Glazed Outswing Fiberglass Doors

APPROVAL DOCUMENT: Drawing No. **S-2177**, titled ""Classic Craft ¾ Oval" Single & Double Outswing 8'0 Fiberglass Door", sheets 1 through 8, dated 11/7/01 with revision #1 dated 2/6/03, prepared by RW Building Consultants, Inc., bearing the Miami-Dade County Product Control Approval stamp with the Notice of Acceptance number and approval date by the Miami-Dade County Product Control Division.

MISSILE IMPACT RATING: None

LABELING: Each unit shall bear a permanent label with the manufacturer's name or logo, city, state and following statement: "Miami-Dade County Product Control Approved", unless otherwise noted herein.

RENEWAL of this NOA shall be considered after a renewal application has been filed and there has been no change in the applicable building code negatively affecting the performance of this product.

TERMINATION of this NOA will occur after the expiration date or if there has been a revision or change in the materials, use, and/or manufacture of the product or process. Misuse of this NOA as an endorsement of any product, for sales, advertising or any other purposes shall automatically terminate this NOA. Failure to comply with any section of this NOA shall be cause for termination and removal of NOA.

ADVERTISEMENT: The NOA number preceded by the words Miami-Dade County, Florida, and followed by the expiration date may be displayed in advertising literature. If any portion of the NOA is displayed, then it shall be done in its entirety.

INSPECTION: A copy of this entire NOA shall be provided to the user by the manufacturer or its distributors and shall be available for inspection at the job site at the request of the Building Official.
This NOA consists of this page 1 as well as approval document mentioned above.
The submitted documentation was reviewed by **Manuel Perez, P.E.**

PRODUCT CONTROL ACCEPTED

Therma-Tru Corporation

NOTICE OF ACCEPTANCE: EVIDENCE SUBMITTED
(For File ONLY. Not part of NOA)

A. DRAWINGS

1. Manufacturer's die drawings and sections.
2. Drawing No **S-2177**, titled ""Classic Craft ¾ Oval" Single & Double Outswing 8'0 Fiberglass Door", sheets 1 through 8, dated 11/7/01 with revision #1 dated 2/6/03, prepared by RW Building Consultants, Inc.

B. TESTS

1. Test reports on 1) Air Infiltration Test, per SFBC, PA 202-94
   2) Uniform Static Air Pressure Test, Loading per SFBC PA 202-94
   3) Water Resistance Test, per SFBC, PA 202-94
   4) Forced Entry Test, per SFBC 3603.2 (b) and PA 202-94

   along with marked-up drawings and installation diagram of a outswing and inswing fiberglass glazed outswing door, prepared by ETC Laboratories, Test Report No. **ETC-01-741-11198.0**, dated 10/04/01, signed and sealed by Wendell Haney, P.E. Addendum letter dated March 8, 2003 also signed and sealed by Wendell Haney, P.E.
2. Test reports on 1) Air Infiltration Test, per SFBC, PA 202-94
   2) Uniform Static Air Pressure Test, Loading per SFBC PA 202-94
   3) Water Resistance Test, per SFBC, PA 202-94
   4) Forced Entry Test, per SFBC 3603.2 (b) and PA 202-94

   along with marked-up drawings and installation diagram of a outswing and inswing fiberglass glazed door, prepared by ETC Laboratories, Test Report No. **ETC-01-741-11212.0**, dated 11/12/01, signed and sealed by Mark D. Passero, P.E. Addendum letter dated February 22, 2002 also signed and sealed by Mark D. Passero, P.E.

C. CALCULATIONS

1. Anchor Calculations and structural analysis, prepared by Lyndon Schmidt, P.E., dated 12/26/01, signed and sealed by Lyndon Schmidt, P.E.

D. MATERIAL CERTIFICATIONS

1. Notice of Acceptance No. **01-1120.07** issued to Threma-Tru Corporation for "Therma-Tru "Fiberglass" Door Skin" dated 1/17/02, expiring on 1/18/07.
2. Notice of Acceptance No. **01-1120.08** issued to Threma-Tru Corporation for "Therma-Tru Series "BTS, TCM, PVC, SMC" Lite Frames" dated 1/18/02, expiring on 1/18/07.
3. Test report on "20 and 90 min. vertical full scale "Fire Endurance and a Hose Stream Test for Door Assemblies" per ASTM E-152 for steel door with polyurethane foam core, prepared by Inchcape Testing Services, Warnock Hershey International, Inc. Test Report No. 6721 dated January 1994.

Manuel Perez, P.E.
Product Control Examiner
NOA No 01-1219.01
Expiration Date: April 03, 2008
Approval Date: April 03, 2003

Therma-Tru Corporation

NOTICE OF ACCEPTANCE: EVIDENCE SUBMITTED
(For File ONLY. Not part of NOA)

E. STATEMENTS

1. Statement letter of conformance and no financial interest, dated 12/14/01, signed and sealed by Lyndon Schmidt, P.E.
2. Letter stating that Mr. Rick Wright has been contracted to represent the company as a consultant, dated 9/6/01, signed and sealed by Steven Kepler.

F. OTHER

1. Letter for San Martin Associates, Inc.

Manuel Perez, P.E.
Product Control Examiner
NOA No 01-1219.01
Expiration Date: April 03, 2008
Approval Date: April 03, 2003

THERMA-TRU®

"CLASSIC CRAFT SERIES"

8'0 OUTSWING GLAZED FIBERGLASS DOOR WITH WOOD FRAME

GENERAL NOTES

1. THIS PRODUCT IS DESIGNED TO COMPLY WITH FLORIDA BUILDING CODE.
2. WOOD BUCKS BY OTHERS, MUST BE ANCHORED PROPERLY TO TRANSFER LOADS TO THE STRUCTURE.
3. PRODUCT ANCHORS SHALL BE AS LISTED AND SPACED AS SHOWN ON DETAILS. ANCHOR EMBEDMENT TO BASE MATERIAL SHALL BE BEYOND WALL DRESSING OR STUCCO.
4. DESIGNED PRESSURE RATING SEE TABLE PAGE 1.
5. THIS PRODUCT MEETS THE WATER REQUIREMENTS FOR "HIGH VELOCITY HURRICAN ZONES" WITH THE USE OF THE HIGH DAM BUMP THRESHOLD. SEE THE DESIGN PRESSURE CHART BELOW.
6. THIS SYSTEM REQUIRES WINDBORNE DEBRIS EXTERNAL PROTECTION AS PRESCRIBED IN SECTION 1621.1 OF THE FLORIDA BUILDING CODE.
7. SIDELITES ARE AN OPTION AND CAN BE USED IN A SINGLE OR DOUBLE CONFIGURATION.

RESIDENTIAL INSULATED FIBERGLASS DOOR
(Common to all frame conditions)

Door & Sidelite Leaf Construction:

Face sheets Door Panel: Fiberglass skin 0.127" minimum thickness, (SMC) Fy(min.)=6,000 psi

Face sheets Sidelite: Fiberglass skin 0.070" minimum thickness, (SMC) with yield strength Fy(min.)=6,000 psi

Core design: Polyurethane foam core, with1.9 lbs. density by BASF.

Panel Construction: The panel skin is constructed from a 0.127" thk. sheet molding compound (SMC). The interior cavity is filled with 1.9 lbs. density BASF polyurethane foam. The panel face sheets are glued to the wood stiles and rails. The latch and hinge stiles are LVL or LSL. The latch stile which is 1.426" x 4.09" is the latch reinforcement. The top and bottom rail are of a wood composite material. In the double door application the inactive door is fitted with an extruded aluminum astragal of 6060–T6 alloy.

Frame Construction: The frame is constructed from finger jointed pine measuring 4.565" wide x 1.25" thick. The header is joined to the side jambs with (3) #8 x 2.5 PFH Screws at each side. The threshold is joined to the side jambs with (2) #8 x 2.5 PFH Screws at each side. The mullions are secured together in a sidelite application using #8 x 2" long PFH Wood Screws (6) screws per each mullion. The units use an Outswing Bump threshold measuring 4.615" x .837".

Door Glazing: SMC Lip Lite – OA size is 21.656" wide x 58.093" secured w/(16) #6 x 1.5" Long Tek Screws. The frames are sealed with silicone caulking (Dow 795) to sidelite panel and to the glass.

Sidelite Glazing: SMC Lip Lite with yield strength Fy(min.)=6,200 psi & PVC Lip Lite with yield strength Fy(min.)=2,145 psi – OA size is 9.85" wide x 65.85" high secured w/(16) #8 x 1.75" Phillips Pan Head Screws. The frames are sealed with silicone caulking (Dow 795) to sidelite panel and to the glass. Integral Flush Glazed – The sidelite sash face panels are molded to receive the insulated Glass. The glass is attached to the sidelite face sheets with silicone glazing compound (Dow 795).

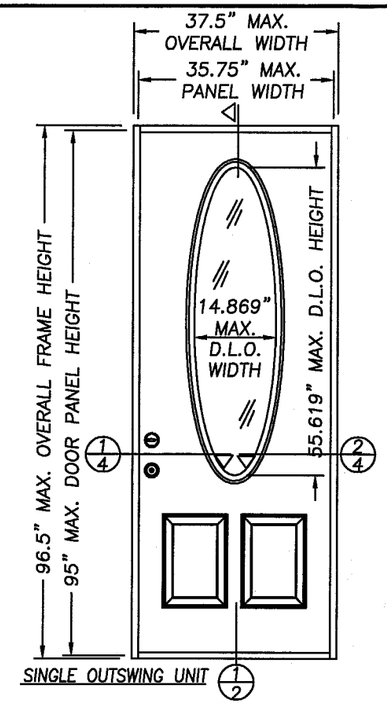

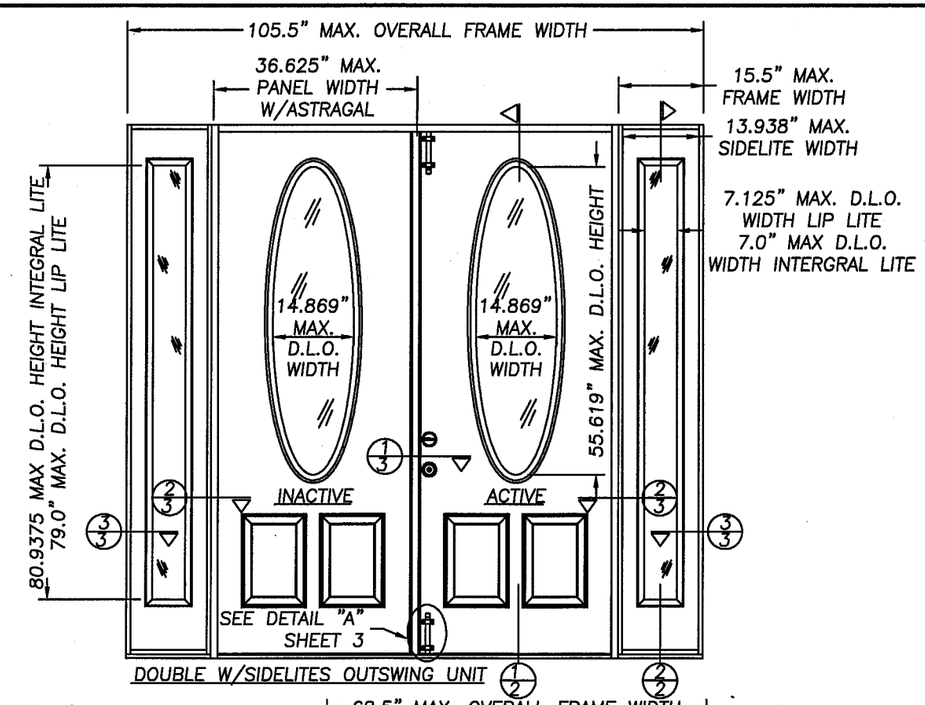

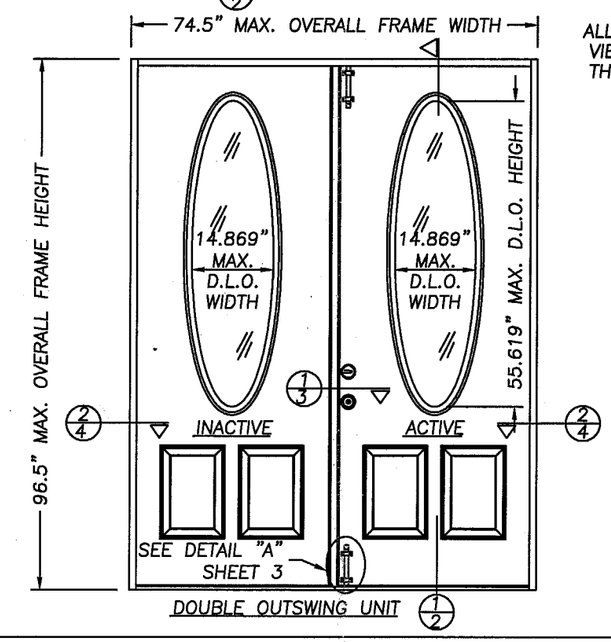

ALL ELEVATIONS VIEWED FROM THE INTERIOR

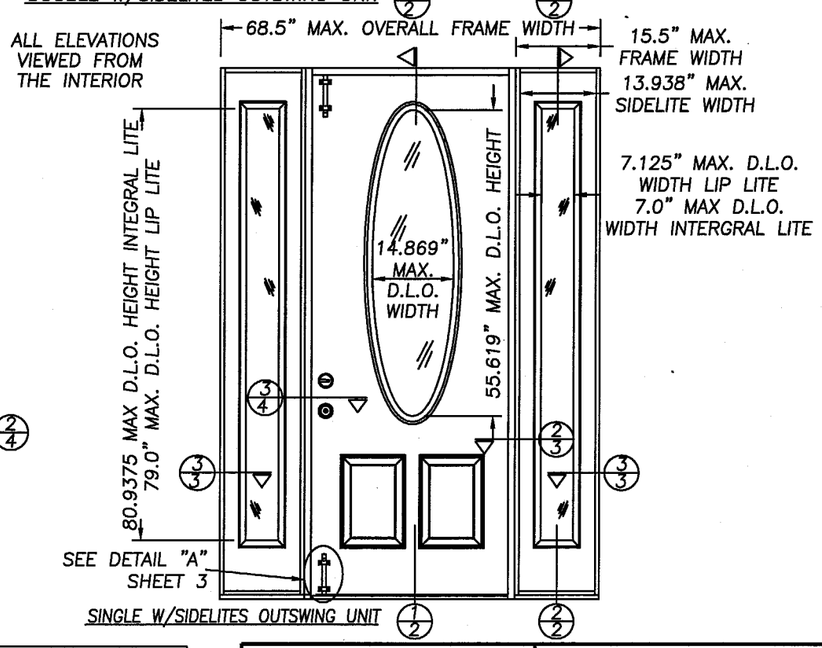

TABLE OF CONTENTS

SHEET #	DESCRIPTION
1	TESTED ELEVATION, OUTSWING UNIT
2	VERTICAL CROSS SECTION
3	HORIZONTAL CROSS SECTIONS
4	HORIZONTAL CROSS SECTIONS & NOTES
5	ANCHORING LOCATION & DETAILS
6	ANCHORING LOCATION
7	UNIT COMPONENTS
8	BILL OF MATERIALS & GLAZING DETAIL

DESIGN PRESSURE RATING (WHERE WATER INFILTRATION REQUIREMENT IS NEEDED, W/HIGH DAM THRESHOLD)

UNIT TYPE	WITH OUT SURFACE BOLTS	WITH SURFACE BOLTS
SINGLE	+ 67.0 PSF – 67.0 PSF	
DOUBLE	+ 47.0 PSF – 47.0 PSF	+ 65.0 PSF – 65.0 PSF
SINGLE & DOUBLE WITH SIDELITES	+ 47.0 PSF – 47.0 PSF	+ 65.0 PSF – 65.0 PSF

Approved as complying with the Florida Buiding Code
Date APRIL 3, 2003
NOA# 01-1219.01
Miami Dade Product Control Division
By Manuel Perez

THERMA-TRU CORPORATION
1687 WOODLANDS DRIVE
MAUMEE, OHIO
PH. (800) 537-8827

PRODUCT: "CLASSIC CRAFT 3/4 OVAL" SINGLE & DOUBLE OUTSWING 8'0 FIBERGLASS DOOR

PART OR ASSEMBLY: ELEVATIONS AND GENERAL NOTES

NO.	DATE	GENERAL REVISION	BY
1	2/6/03		TJH

REVISIONS

RW BUILDING CONSULTANTS, INC.
813.659.9197

DATE: 11/7/01
SCALE: NTS
DWG. BY: WLN
CHK. BY: RW
DRAWING NO.: S-2177
SHEET 1 OF 8

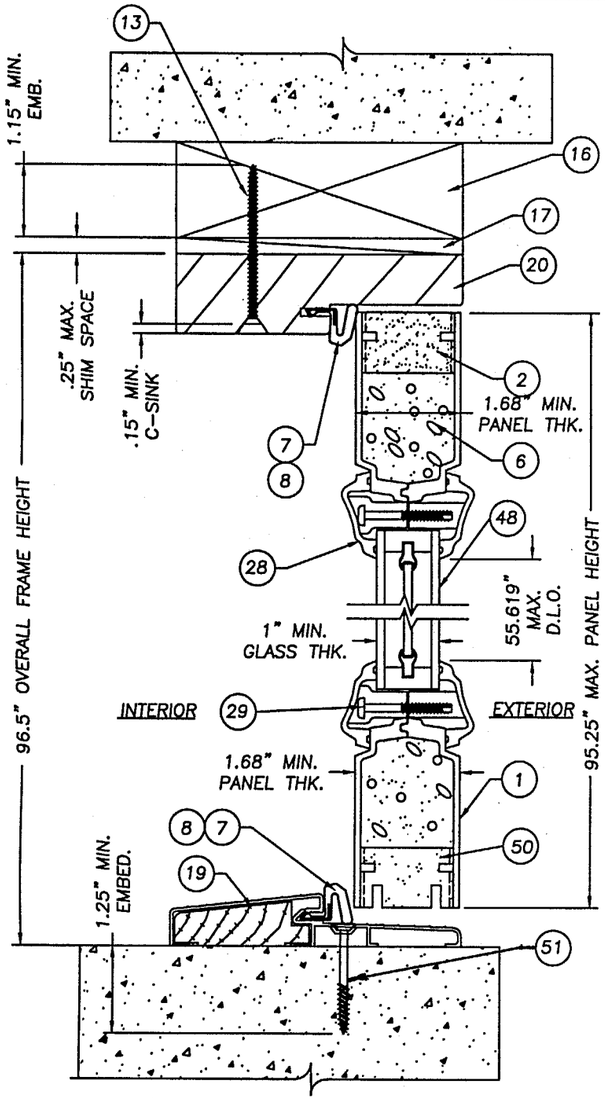

1/2 VERTICAL CROSS SECTION
OUTSWING DOOR PANEL
WITH LOW PROFILE THRESHOLD
(THIS THRESHOLD NOT FOR USE
WHERE WATER REQUIREMENT IS NEEDED)

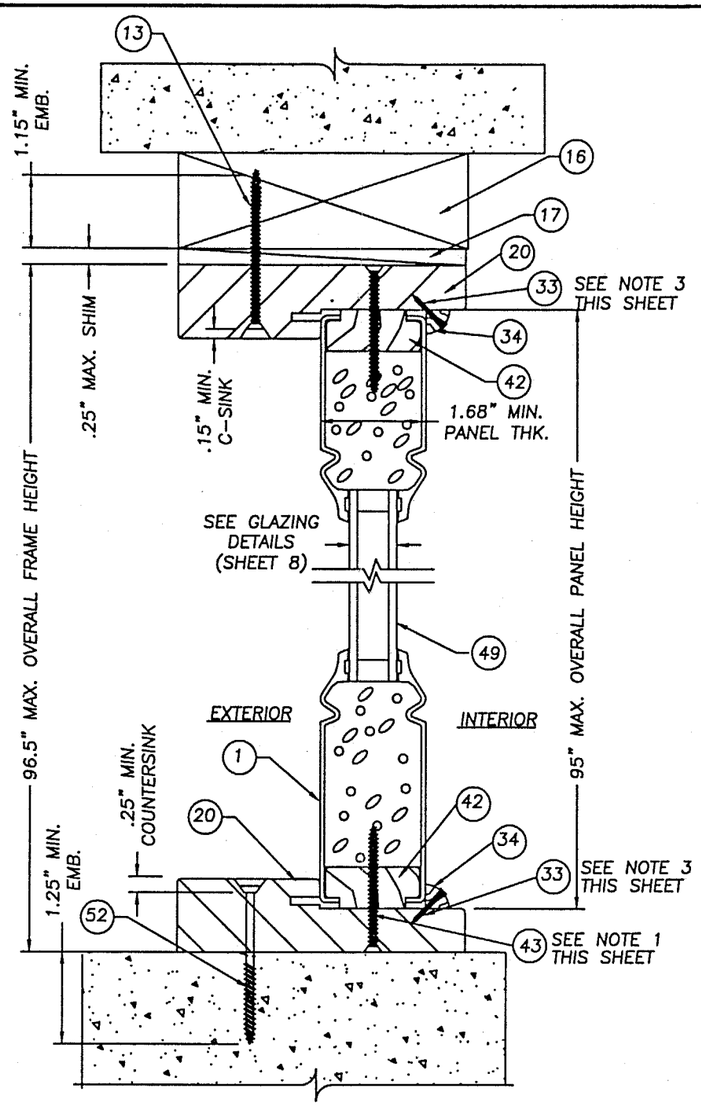

2/2 VERTICAL CROSS SECTION
OUTSWING SIDELITE PANEL
THE CROSS SECTION IS
SHOWN W/THE "CLASSIC
CRAFT" FLUSH GLAZED & 3/4" GLASS

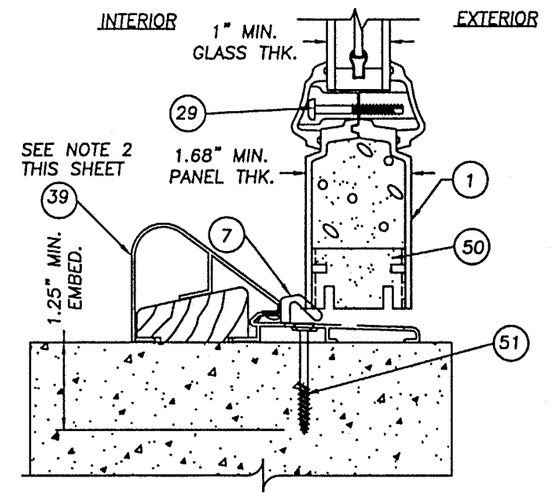

1/2 VERTICAL CROSS SECTION
OUTSWING DOOR PANEL W/ HIGH DAM THRESHOLD
(THIS THRESHOLD MEETS WATER REQUIREMENTS)

NOTES:

1. THE SIDELITE IS DIRECT SET INTO THE JAMB WITH (12) #8 x 2" PFH. WOOD SCREW. THERE ARE (4) AT EACH VERTICAL JAMB, FROM THE TOP DOWN AT 13.5", 31", 48.5" 66". THERE ARE (2) AT THE HEADER AT 4" IN FROM THE OUTSIDE CORNERS OF THE FRAME. THERE ARE (2) AT THE SILL, 4" IN FROM THE OUTSIDE CORNERS.
2. THE HIGH DAM THRESHOLD IS MANDATORY WHERE WATER REQUIREMENT IS NEEDED.
3. THE SASH WAS STOPPED IN WITH A NOMINAL 3/8" QUARTER ROUND MOLDING AROUND PERIMETER. THE COVE MOLDING WAS SECURED USING 1" x 0.04" DIA. WIRE BRADS AT 2" FROM EACH END A MAX. OF 12" O.C.

Approved as complying with the Florida Building Code
Date APRIL 3, 2003
NOA# 01-1219.01
Miami Dade Product Control Division
By Manuel Perez

THERMA-TRU CORPORATION
1687 WOODLANDS DRIVE
MAUMEE, OHIO
PH. (800) 537-8827

PRODUCT: "CLASSIC CRAFT 3/4 OVAL" SINGLE & DOUBLE OUTSWING 80 FIBERGLASS DOOR

PART OR ASSEMBLY: VERTICAL CROSS SECTIONS

NO.	DATE	REVISIONS	BY
1	2/6/03	GENERAL REVISION	TJH

RW BUILDING CONSULTANTS, INC.
813.659.9197

DATE: 11/7/01
SCALE: NTS
DWG. BY: WLN
CHK. BY: RW
DRAWING NO.: S-2177
SHEET 2 OF 8

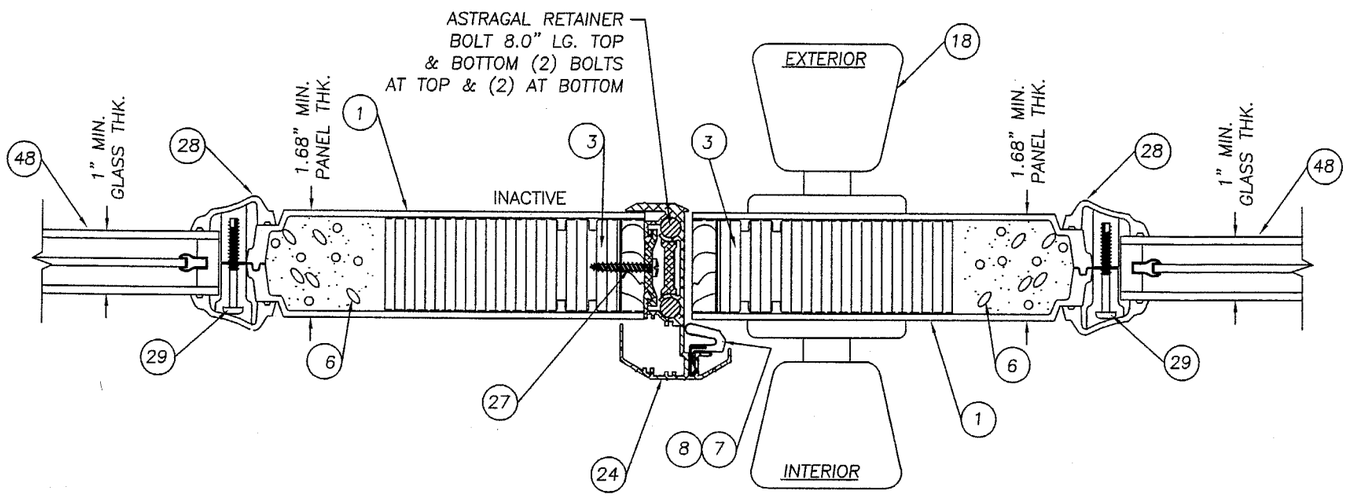

1/3 HORIZONTAL CROSS SECTION @ ASTRAGAL

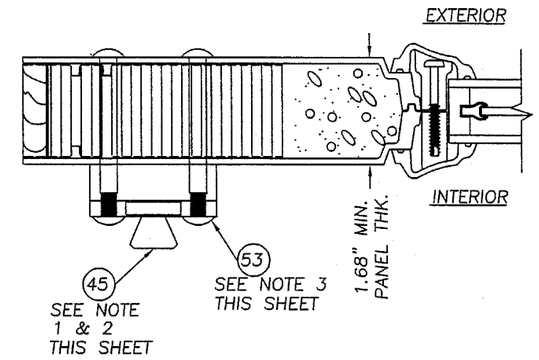

DETAIL "A"
OPTIONAL ADDITION OF SURFACE BOLT

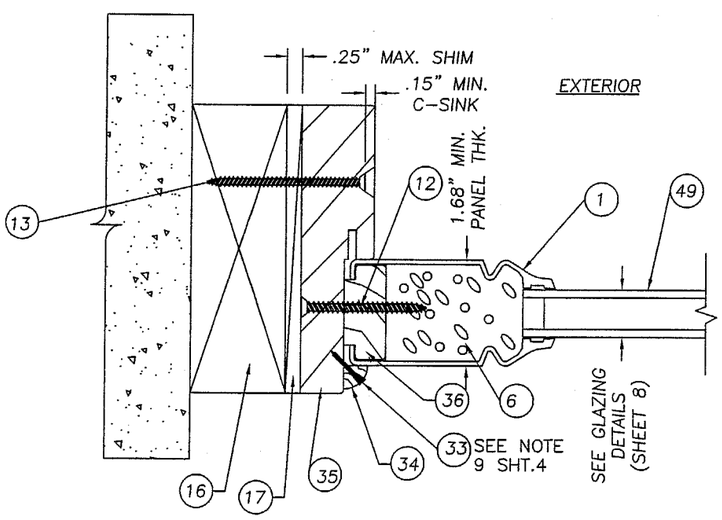

3/3 HORIZONTAL CROSS SECTION @ SIDELITE TO BUCK

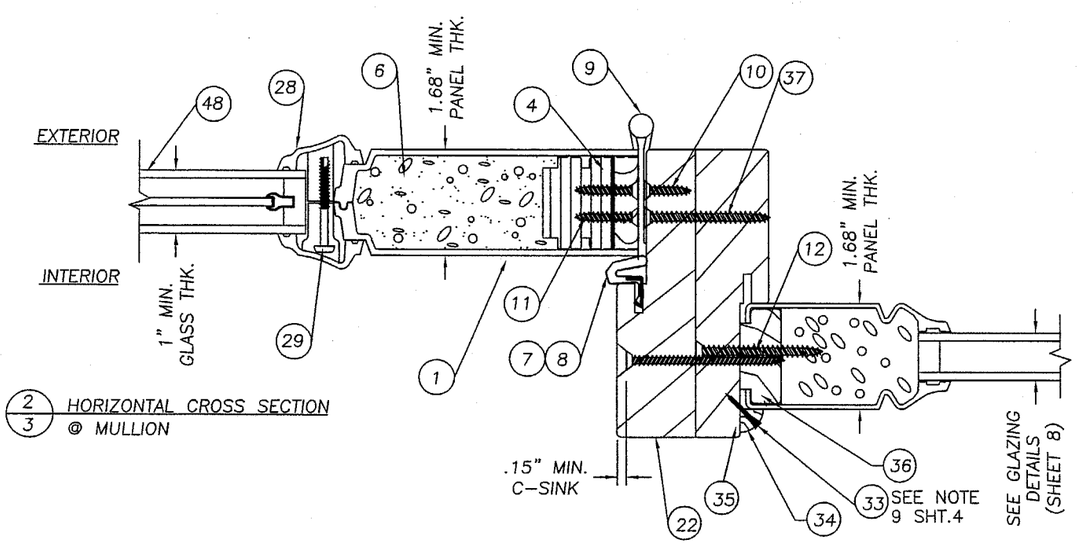

2/3 HORIZONTAL CROSS SECTION @ MULLION

NOTES:
1. THE SURFACE BOLTS ARE AN OPTION ON THE ACTIVE DOOR TO ACHIEVE A HIGH PRESSURE RATING.
2. THE SURFACE BOLT STRIKE ARE LOCATED AT THE TOP AND BOTTOM OF THE ACTIVE PANEL AT 2.5" CENTERLINE FROM THE LATCH STILE EDGE. THE STRIKES FOR EACH BOLT WERE ATTACHED TO THE JAMB AND THRESHOLD WITH (2) #8 x 2.5" PFH WS.
3. THE SURFACE BOLTS WERE ATTACHED TO THE ACTIVE PANEL WITH (4) 10-24 SEX BOLTS.

Approved as complying with the Florida Buiding Code
Date APRIL 3, 2003
NOA# 01-1219.01
Miami Dade Product Control Division
By Manuel Perez

THERMA-TRU CORPORATION
1687 WOODLANDS DRIVE
MAUMEE, OHIO
PH. (800) 537-8827

PRODUCT: "CLASSIC CRAFT 3/4" OVAL" SINGLE & DOUBLE OUTSWING 8'0 FIBERGLASS DOOR

PART OR ASSEMBLY: HORIZONTAL CROSS SECTION

NO.	DATE	REVISIONS	BY
1	2/6/03	GENERAL REVISION	TJH

RW BUILDING CONSULTANTS, INC.
813.659.9197

DATE: 11/7/14
SCALE: NTS
DWG. BY: WLN
CHK. BY: RW
DRAWING NO.: S-2177
SHEET 3 OF 8

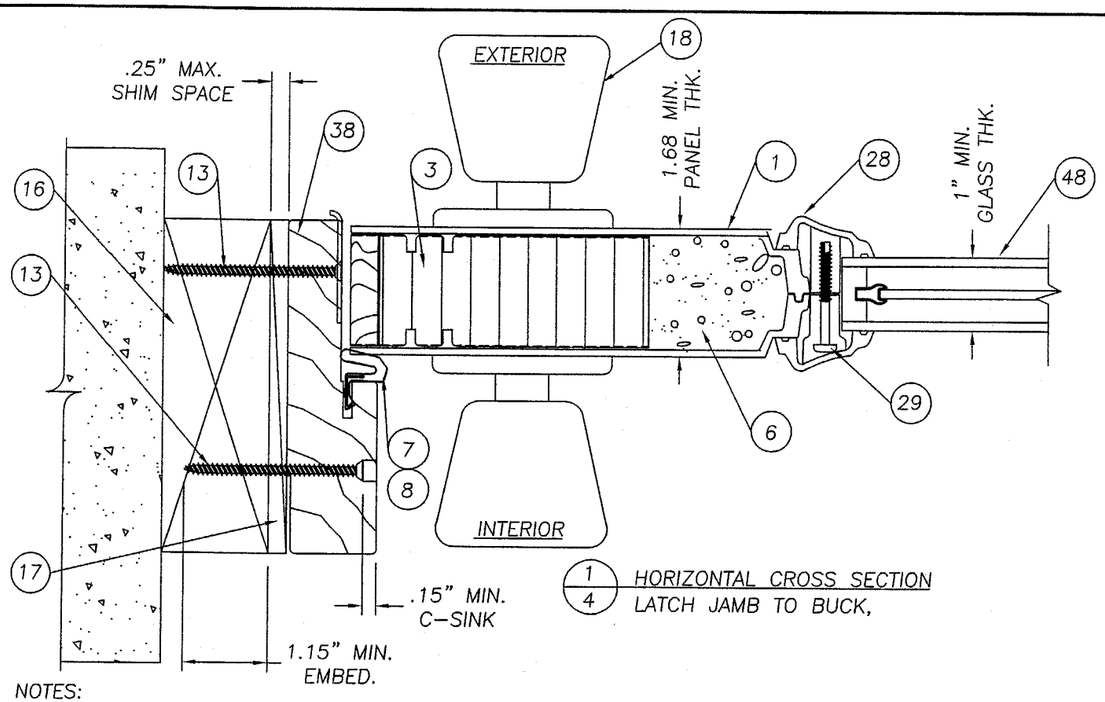

1/4 HORIZONTAL CROSS SECTION
LATCH JAMB TO BUCK,

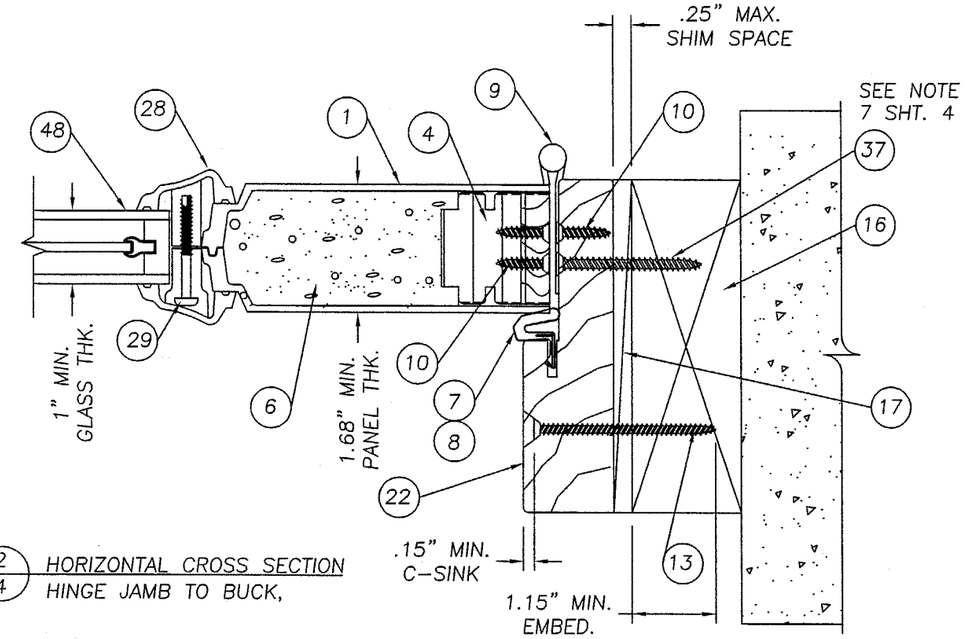

2/4 HORIZONTAL CROSS SECTION
HINGE JAMB TO BUCK,

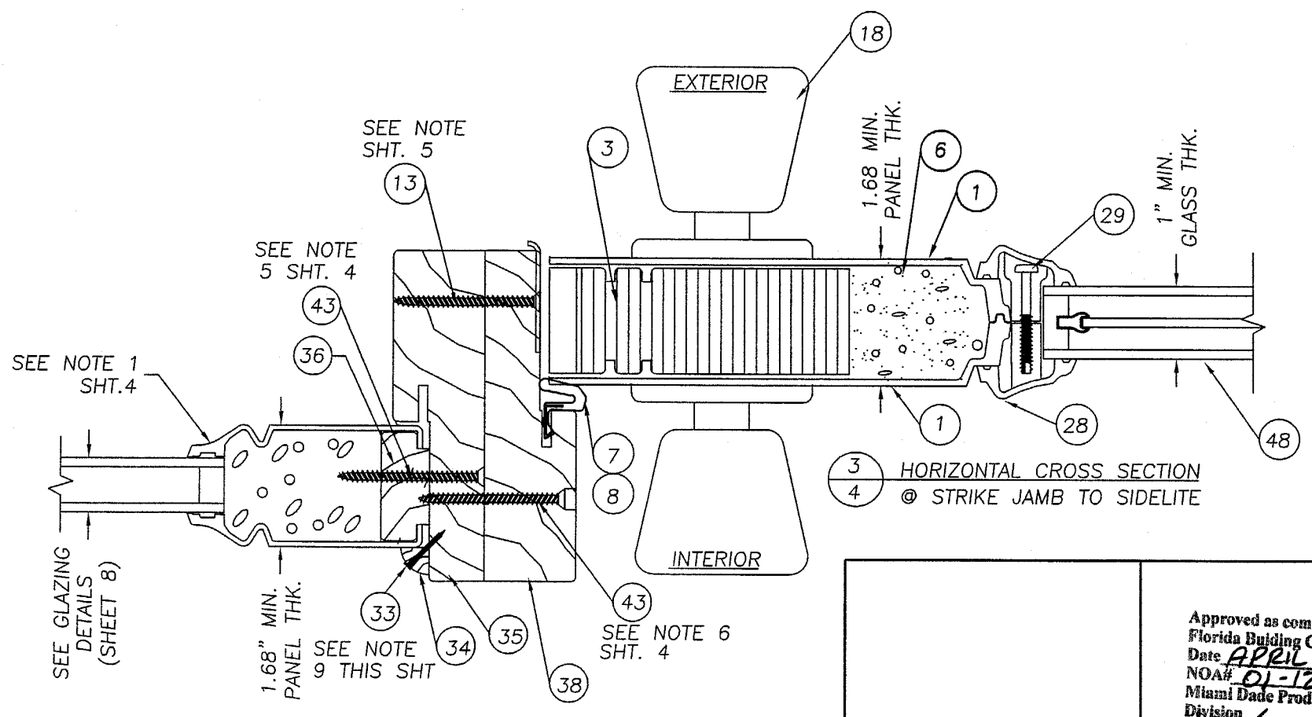

3/4 HORIZONTAL CROSS SECTION
@ STRIKE JAMB TO SIDELITE

NOTES:

1. THE SIDELITE SASH FACE PANELS ARE MOLDED TO RECEIVE THE INSULATED GLASS. THE GLASS IS ATTACHED TO THE SIDELITE FACE SHEETS WITH SILICONE GLAZING COMPOUND (DOW 795).
2. SPACING FOR #8 x 1" PANHEAD SCREW ATTACHING THE ASTRAGAL TO THE INACTIVE DOOR IS AS FOLLOWS: FROM THE TOP DOWN 1", 3", 5", 18.25", 54.0", 77.0" 90.25", 92.25", & 94.25".
3. THE HEAD JAMB IS ATTACHED TO THE SIDE JAMBS WITH (3) #8 x 2.5" PFH WOOD SCREWS AT BOTH SIDE.
4. THE THRESHOLD IS ATTACHED TO THE SIDE JAMBS WITH (2) #8 x 2.5 PFH WOOD SCREWS AT BOTH SIDE.
5. THE SIDELITE IS DIRECT SET INTO THE JAMB WITH (12) #8 x 2" PFH. WOOD SCREW. THERE ARE (6) AT EACH VERTICAL JAMB, FROM THE TOP DOWN AT 6.0", 23.0", 40.0", 57.0", 74.0" & 90.5". THERE ARE (2) AT THE HEADER AT 4" IN FROM THE OUTSIDE CORNERS OF THE FRAME. THERE ARE (2) AT THE SILL, 4" IN FROM THE OUTSIDE CORNERS.
6. SPACING FOR #8 x 2" SCREW SECURING THE MULLIONS TOGETHER IS THE SAME AS THE PERIMETER ANCHORING SCREWS. 6" DOWN FROM THE TOP AND UP FROM THE BOTTOM WITH (4) MORE SPACED AT 17" O.C.
7. WHEN ATTACHING THE HINGE TO THE JAMB AND THE BUCK USE A #10 x 1 3/4" SCREW. WHEN ATTACHING THE HINGE TO THE JAMB AND THE SIDELITE AT THE MULLION USE #10 x 1 3/4" SCREW.
8. THE HIGH DAM THRESHOLD IS ONLY USED IN AN APPLICATION WHERE A HIGHER WATER PRESSURE MUST BE ACHIEVED (SEE DESIGN PRESSURE CHART).
9. THE SASH WAS STOPPED IN WITH A NOMINAL 3/8" QUARTER ROUND MOLDING AROUND PERIMETER. THE COVE MOLDING WAS SECURED USING 1" x 0.04" DIA. WIRE BRADS AT 2" FROM EACH END A MAX. OF 12" O.C.

Approved as complying with the Florida Building Code
Date APRIL 3 2003
NOA# 01-1219.01
Miami Dade Product Control Division
By Manuel Perez

THERMA-TRU CORPORATION
1687 WOODLANDS DRIVE
MAUMEE, OHIO
PH. (800) 537-8827

PRODUCT: "CLASSIC CRAFT 3/4 OVAL" SINGLE & DOUBLE OUTSWING 8'0 FIBERGLASS DOOR

PART OR ASSEMBLY: HORIZONTAL CROSS SECTIONS & NOTES

NO.	DATE	REVISIONS	BY
1	2/6/03	GENERAL REVISION	TJH

RW BUILDING CONSULTANTS, INC.
813.659.9197

DATE: 11/7/01
SCALE: NTS
DWG. BY: WLN
CHK. BY: RW
DRAWING NO.: S-2177
SHEET 4 OF 8

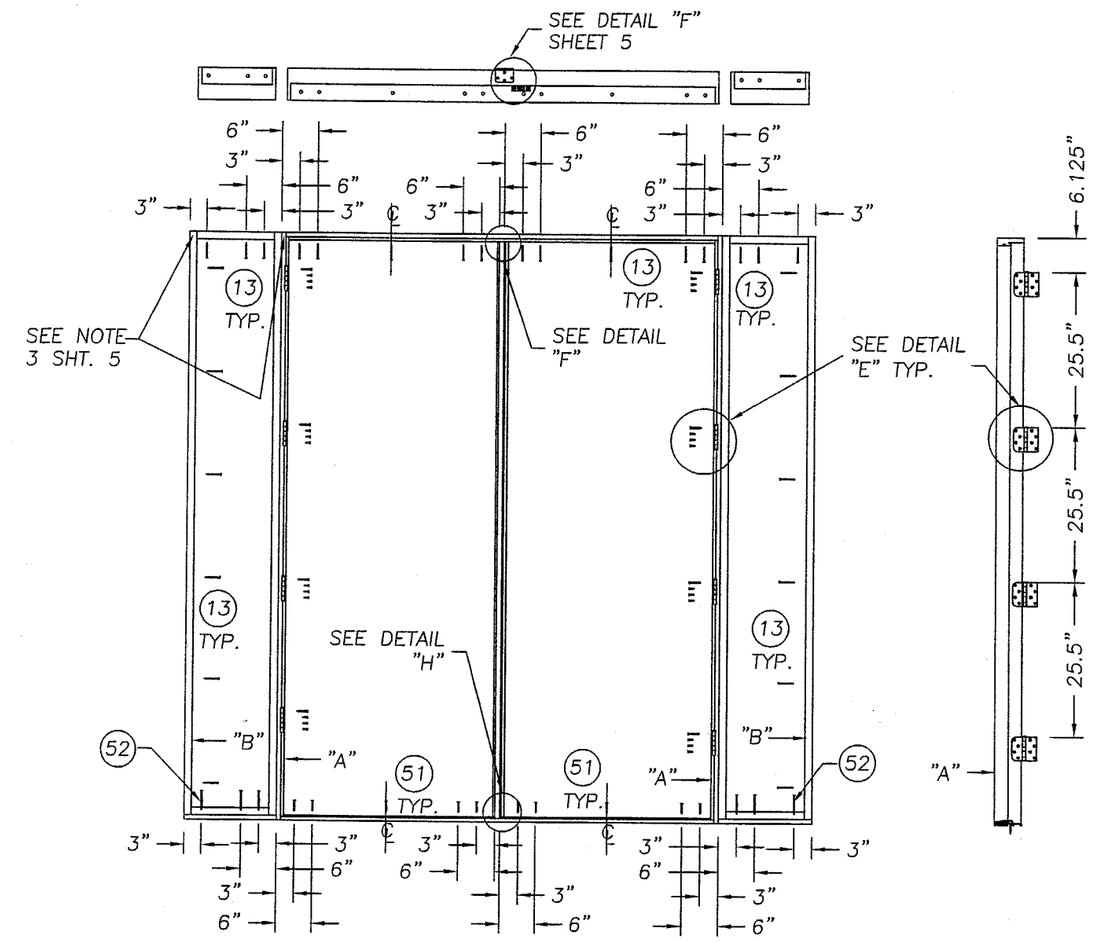

DOUBLE DOOR W/SIDELITES

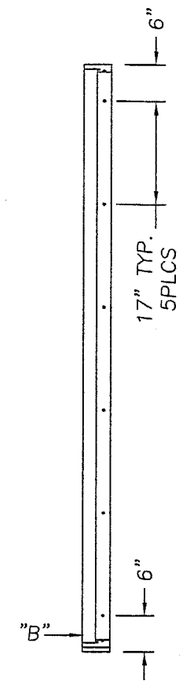

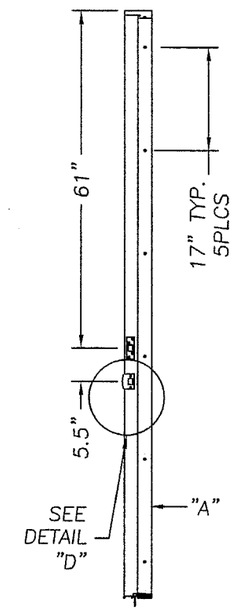

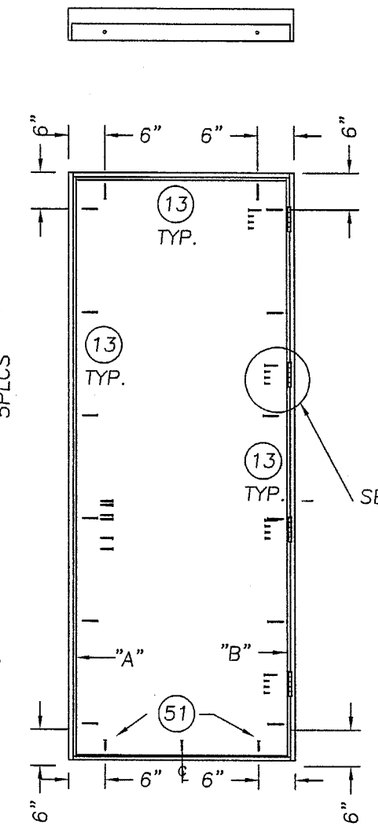

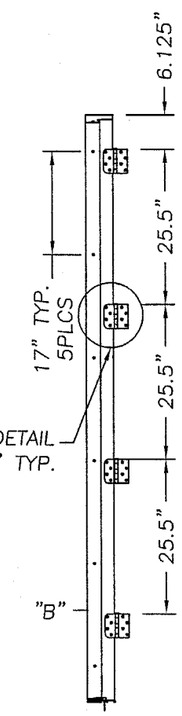

SINGLE DOOR

NOTE:
USE ITEM #13 A #8 x 2 1/2" PFH WOOD SCREW TO ATTACH THE STRIKE AND DEADBOLT PLATES TO THE JAMB OR ASTRAGAL EXCEPT IN THE MULLED APPLICATION WITH THE SIDELITE USE ITEM #43 A #8 x 2" PFH WOOD SCREW.

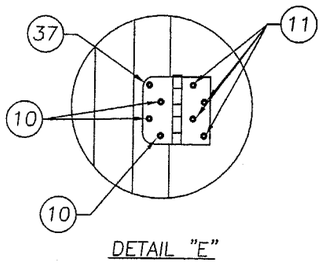

DETAIL "E"

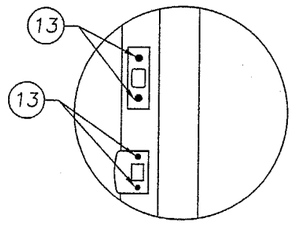

DETAIL "G"

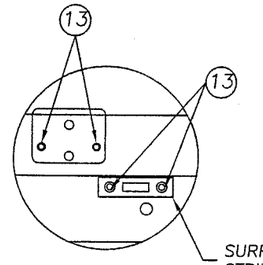

DETAIL F
ASTRAGAL STRIKE PLATE & OPTIONAL SURFACE BOLT STRIKE PLATE

DRILL THRU FOR A ø.357" BOLT DEEP ENOUGH FOR A 2" BOLT THROW

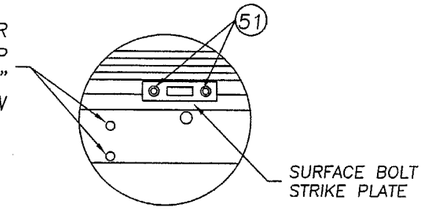

DETAIL "H"
RETAINER BOLT HOLES & OPTIONAL SURFACE BOLT STRIKE PLATE

Approved as complying with the Florida Buiding Code
Date APRIL 3, 2003
NOA# 01-1219.01
Miami Dade Product Control Division
By Manuel Perez

THERMA-TRU CORPORATION
1687 WOODLANDS DRIVE
MAUMEE, OHIO
PH. (800) 537-8827

PRODUCT: "CLASSIC CRAFT 3/4 OVAL" SINGLE & DOUBLE OUTSWING 8'0 FIBERGLASS DOOR
PART OR ASSEMBLY: ANCHORING LOCATIONS & DETAILS

NO.	DATE	GENERAL REVISION	BY
1	2/6/03		TJH

REVISIONS

RW BUILDING CONSULTANTS, INC.
813.659.9197

DATE: 11/7/01
SCALE: N.T.S.
DWG. BY: WLN
CHK. BY: RW
DRAWING NO.: S-2177
SHEET 5 OF 8

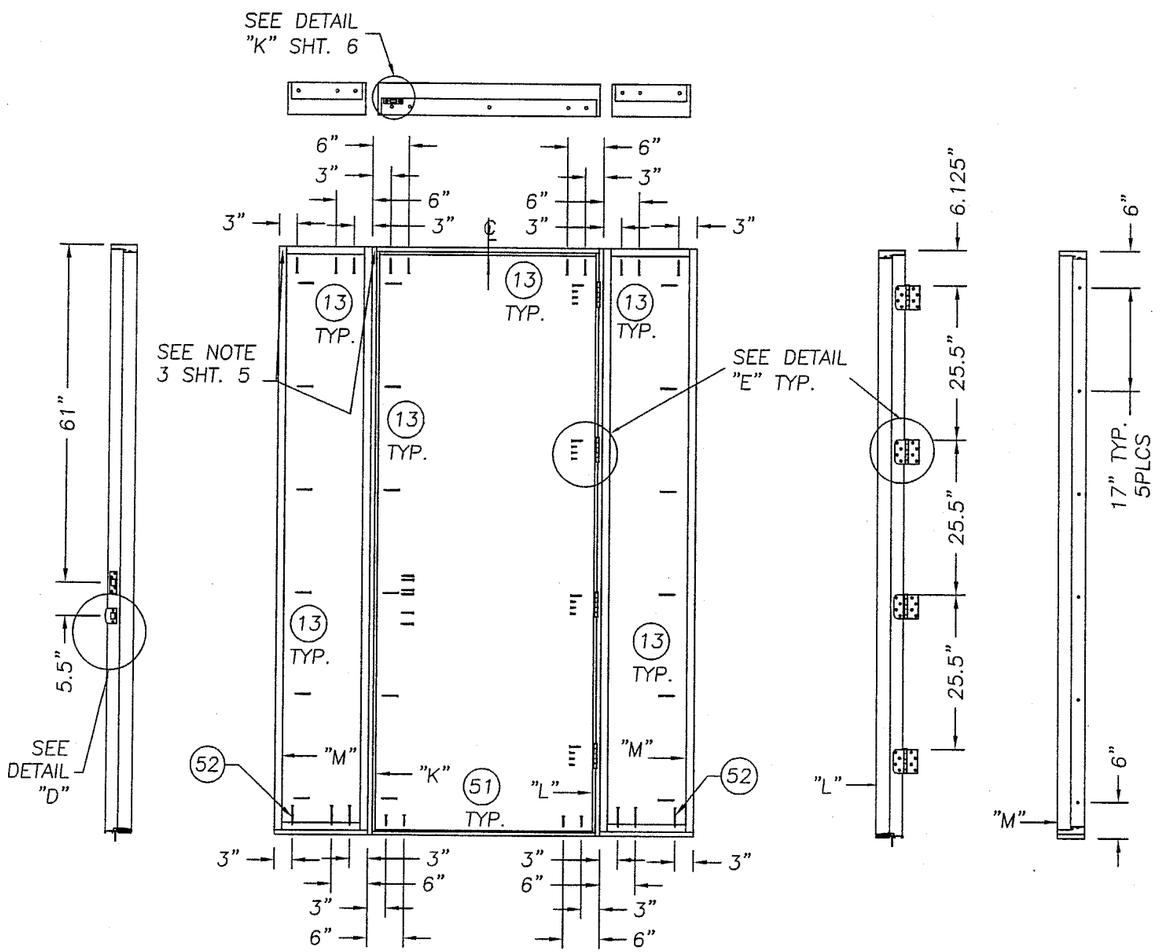

DOUBLE DOOR W/SIDELITES

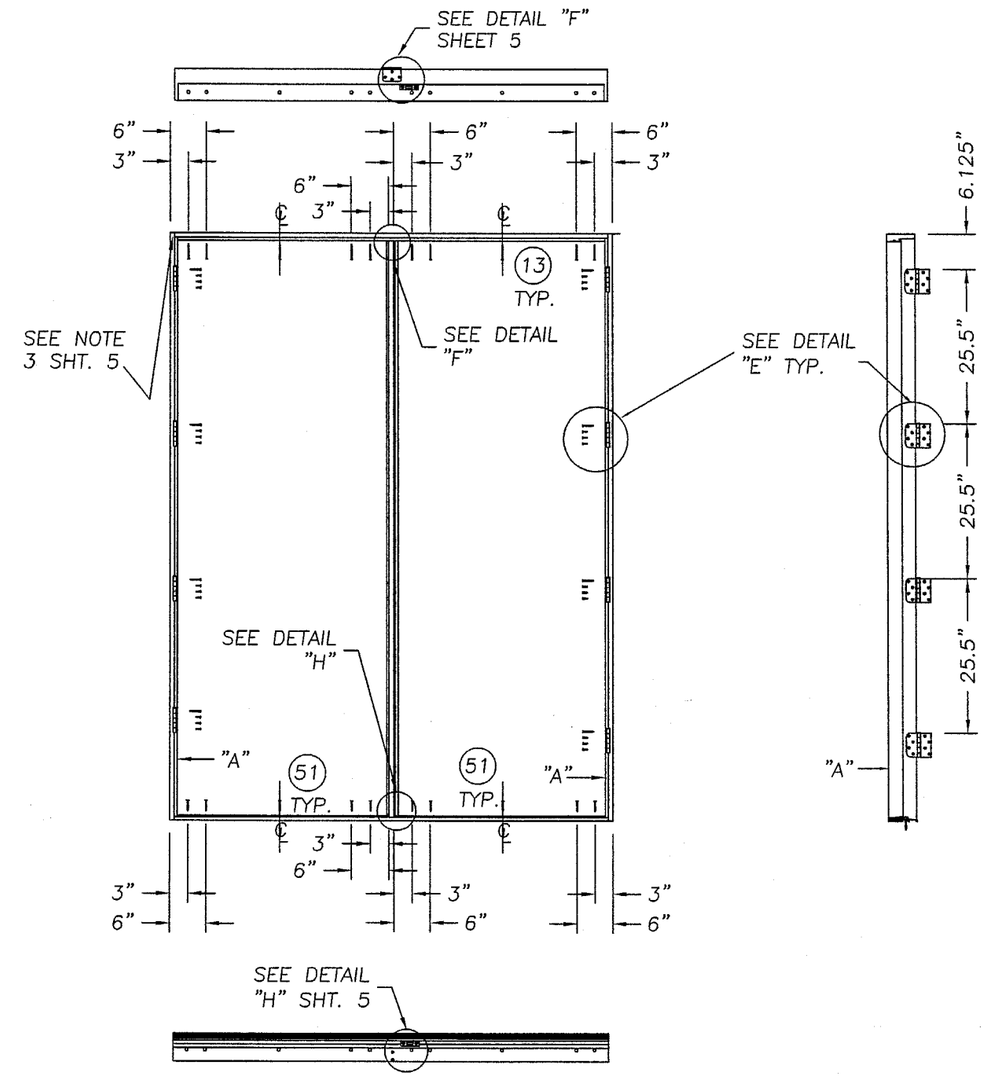

DOUBLE DOOR

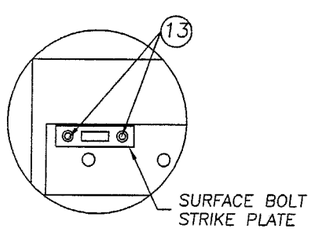

DETAIL K
OPTIONAL SURFACE BOLT STRIKE PLATE

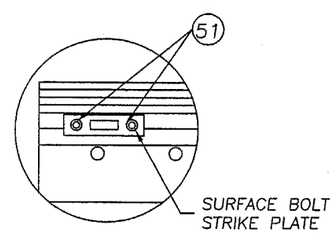

DETAIL "J"
OPTIONAL SURFACE BOLT STRIKE PLATE

Approved as complying with the Florida Buiding Code
Date APRIL 3, 2003
NOA# 01-1219.01
Miami Dade Product Control Division
By Manuel Perez

THERMA-TRU CORPORATION
1687 WOODLANDS DRIVE
MAUMEE, OHIO
PH. (800) 537-8827

PRODUCT: "CLASSIC CRAFT 3/4 OVAL" SINGLE & DOUBLE OUTSWING 8'0 FIBERGLASS DOOR

PART OR ASSEMBLY: ANCHORING LOCATIONS

REVISIONS

NO.	DATE	GENERAL REVISION	BY
1	2/6/03		TJH

RW BUILDING CONSULTANTS, INC.
813.659.9197

DATE: 11/7/01
SCALE: N.T.S.
DWG. BY: WLN
CHK. BY: RW
DRAWING NO.: S-2177
SHEET 6 OF 8

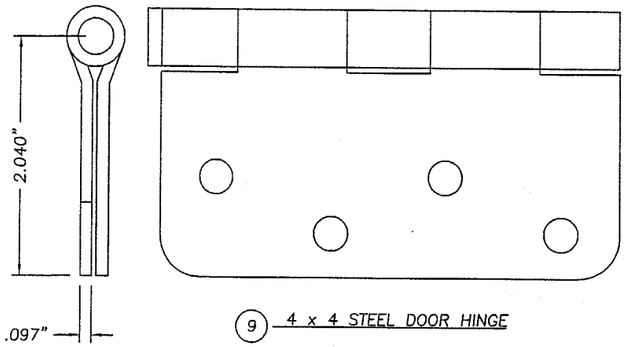

(9) 4 x 4 STEEL DOOR HINGE

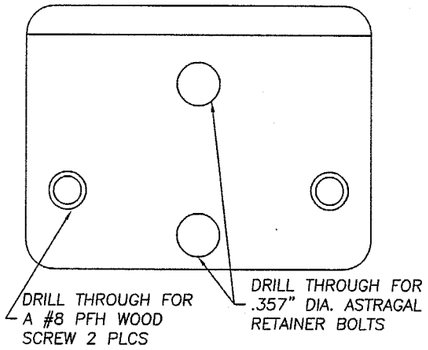

WINDJAMBER II WR68T STRIKE PLATE

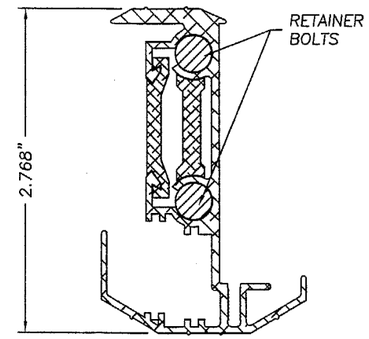

(24) WINDJAMBER II WR68T ASTRAGAL (ALUMINUM .052" WALL TYP.)

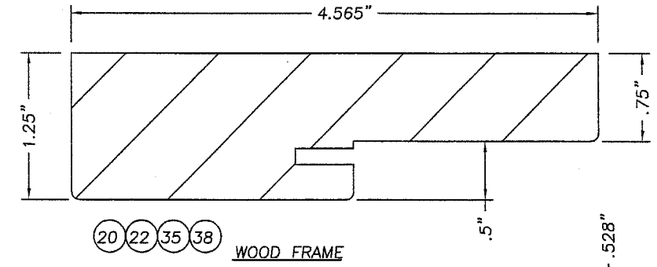

(20)(22)(35)(38) WOOD FRAME

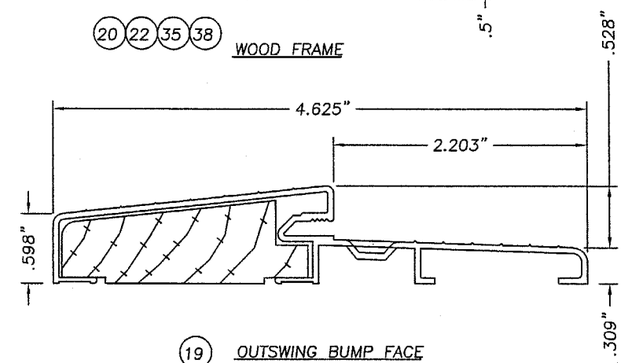

(19) OUTSWING BUMP FACE ALUMINUM/WOOD THRESHOLD .050" WALL TYP.

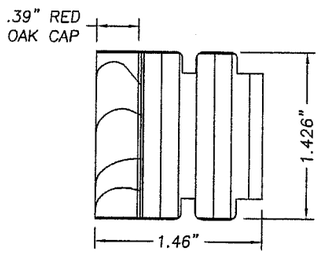

CC HINGE SIDE STILE

(4) CORE MATERIAL: LVL OR LSL
ALTERNATE CORE MATERIAL: PONDEROSA, RADIATA, PULAI, ELLIOTTII, TAEDA OR SUGAR PINE, DOUGLAS OR WHITE FIR, CEDAR, INCENSE CEDAR OR REDWOOD.

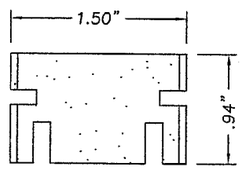

(50) CC BOTTOM RAIL WOOD COMPOSITE

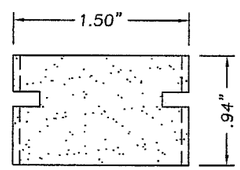

(2) CC TOP RAIL WOOD COMPOSITE

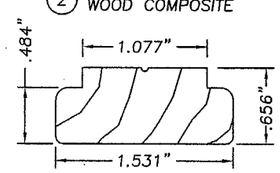

(36) SIDELITE BLANK SIDE STILE FINGER JOINTED PONDEROSA PINE

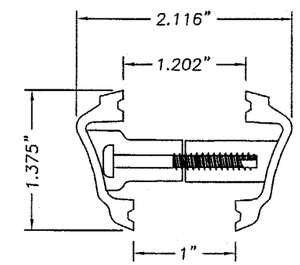

(28) MOLDED OPEN LITE SMC FRAME EXTRUDED SMC

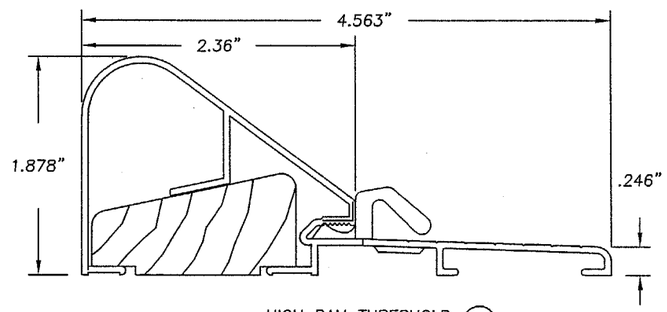

HIGH DAM THRESHOLD (39)

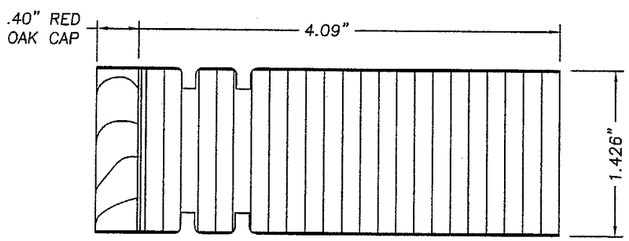

(3) CC LATCH SIDE STILE CORE MATERIAL LVL OR LSL

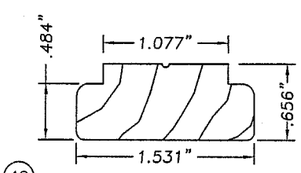

(42) SIDELITE TOP & BOTTOM RAIL FINGER JOINTED PONDEROSA PINE

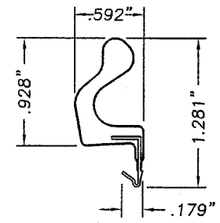

(8) LONG REACH COMPRESSION WEATHERSTRIP FOAM CELL CORE W/VINYL JACKET

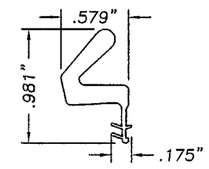

(7) COMPRESSION WEATHERSTRIP BY THERMA-TRU FOAM CELL CORE W/VINYL JACKET

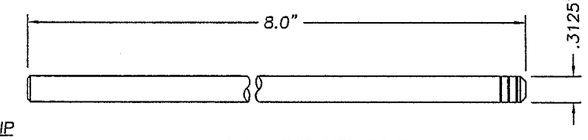

ASTRAGAL RETAINER BOLT
MATERIAL: C/R ROD ZINC & YELLOW CHROMATE

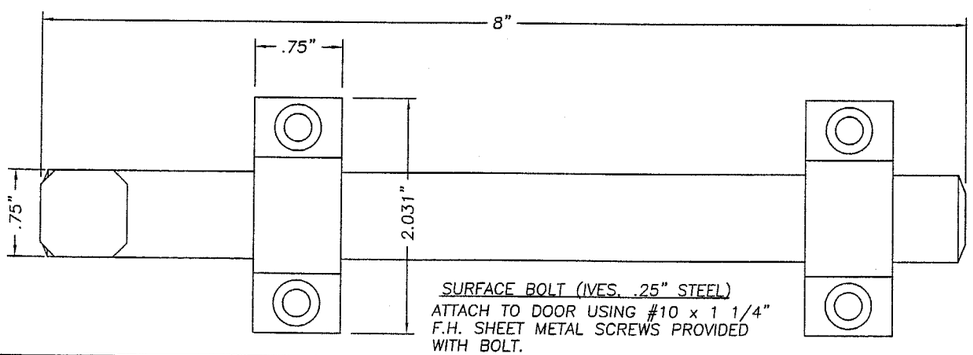

SURFACE BOLT (IVES, .25" STEEL)
ATTACH TO DOOR USING #10 x 1 1/4" F.H. SHEET METAL SCREWS PROVIDED WITH BOLT.

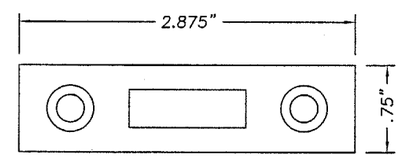

SURFACE BOLT STRIKE (.125" STEEL)
ATTACH TO SILL USING #10 x 1 1/4" F.H. SHEET METAL SCREWS PROVIDED WITH BOLT.

Approved as complying with the Florida Building Code
Date APRIL 3, 2003
NOA# 01-1219.01
Miami Dade Product Control Division
By

THERMA-TRU CORPORATION
1687 WOODLANDS DRIVE
MAUMEE, OHIO
PH. (800) 537-8827

PRODUCT: "CLASSIC CRAFT 3/4" OVAL" SINGLE AND DOUBLE OUTSWING 8'0 FIBERGLASS DOOR

PART OR ASSEMBLY: UNIT COMPONENTS

REVISIONS

NO.	DATE		BY
1	2/6/03	GENERAL REVISION	TJH

RW BUILDING CONSULTANTS, INC.
813.659.9197

DATE: 11/7/01
SCALE: NTS
DWG. BY: WLN
CHK. BY: RW
DRAWING NO.: S-2177
SHEET 7 OF 8

Item	DESCRIPTION	Material
1	CLASSIC CRAFT DOOR SKIN .095" MIN. THK. FIBERGLASS BY THERMA TRU with yield strength Fy(min.) = 6,000 psi	FIBERGLASS
2	CC TOP RAIL (1.50" x .94" THERMA-TRU WOOD COMPOSITE)	WOOD COMPOSITE
3	CC LATCH STILE/LOCK BLOCK (THERMA-TRU, LVL OR LSL & OAK 1.50" x 4.125")	LVL OR LSL/OAK
4	CC HINGE STILE (THERMA-TRU, LVL OR LSL & OAK 1.50" x 1.457")	LVL OR LSL/OAK
5	NOT USED	
6	POLYURETHANE FOAM (BASF, 1.9lbs. DENSITY)	FOAM
7	SHORT REACH COMPRESSION WEATHERSTRIP (THERMA-TRU)	FOAM
8	LONG REACH COMPRESSION WEATHERSTRIP (THERMA-TRU)	FOAM
9	4" x 4" HINGE .097" THK. (THERMA-TRU)	STEEL
10	#10 x 3/4" lg. PFH WOOD SCREW (Hinge to Frame)	STEEL
11	#10 x 1" LG. PFH WOOD SCREW	STEEL
12	#8 x 2" LG. PFH WOOD SCREW	STEEL
13	#8 x 2 1/2" LG. PFH WOOD SCREW	STEEL
14	NOT USED	
15	NOT USED	WOOD
16	2x INNER WOOD TEST BUCK	WOOD
17	MAX. 1/4" SHIM MATERIAL	WOOD
18	KWIKSET TITAN 700 SERIES PASSAGE LOCK	–
19	ONE PIECE BUMP FACE THRESHOLD (THERMA-TRU)	ALUM./WOOD
20	HEADER 4.656" x 1.211" (THERMA-TRU, PONDEROSA PINE)	WOOD
21	NOT USED	
22	HINGE JAMB 4.656" x 1.211" (THERMA-TRU, PONDEROSA PINE)	WOOD
23	KWIKSET TITAN 700 SERIES DEADBOLT	–
24	ASTRAGAL WINDJAMBER II WR68T (.052" WALL)	ALUM. 6060-T6
25	GLAZING, 1/2" INSULATED TEMPERED GLASS	GLASS
26	NOT USED	–
27	#8 x 1" LG. PANHEAD SHEET METAL SCREW	STEEL
28	MOLDED OPEN LITE FRAME EXTRUDED SMC with the yield strength Fy(min)=6,200 psi	SMC
29	K40 x 1.50" PT THREAD SCREW, MAJOR DIA. 4.0MM (FOR ITEM #28)	STEEL
30	NOT USED	
31	NOT USED	
32	1/8 THK. CELLULAR GLAZING TAPE (STIK-II TAPE)	–
33	1" X .04" DIA WIRE BRADS	STEEL
34	3/8" QUARTER ROUND MOLDING	WOOD
35	BLANK JAMB 4.656" x 1.211" (THERMA-TRU, PONDEROSA PINE)	WOOD
36	SIDELITE SIDE STILE (THERMA-TRU, 1.531" x .656" PONDEROSA PINE)	WOOD
37	#10 x 1 3/4" LG. PFH WOOD SCREW	STEEL
38	NOT USED	
39	HIGH WATER DAM THRESHOLD	ALUM.
40	SILICONE CAULK	SILICONE
41	NOT USED	
42	SIDELITE TOP & BOTTOM RAIL (THERMA-TRU, 1.531" x .656" PONDEROSA PINE)	WOOD
43	#8 x 2" LG. PFH WOOD SCREW	STEEL
44	3/16" SEX BOLT	STEEL
45	IVES 454 8" SURFACE BOLT	STEEL
46	NOT USED	TCM
47	NOT USED	STEEL
48	GLAZING, 1" INSULATED TEMPERED GLASS	GLASS
49	GLAZING, 3/4" INSULATED TEMPERED GLASS	GLASS
50	CC BOTTOM RAIL (1.50" x .94" THERMA-TRU WOOD COMPOSITE)	WOOD COMPOSITE
51	3/16" TAPCON ANCHORING (ELCO, 1.75" MIN. LG.)	STEEL
52	3/16" TAPCON ANCHORING (ELCO, 2.5" MIN. LG.)	STEEL
53	10-24 SEX BOLT	STEEL
54	PLASTIC LIP LITE FRAME PVC with a yield stregth Fy(min)=2,145 psi	PVC

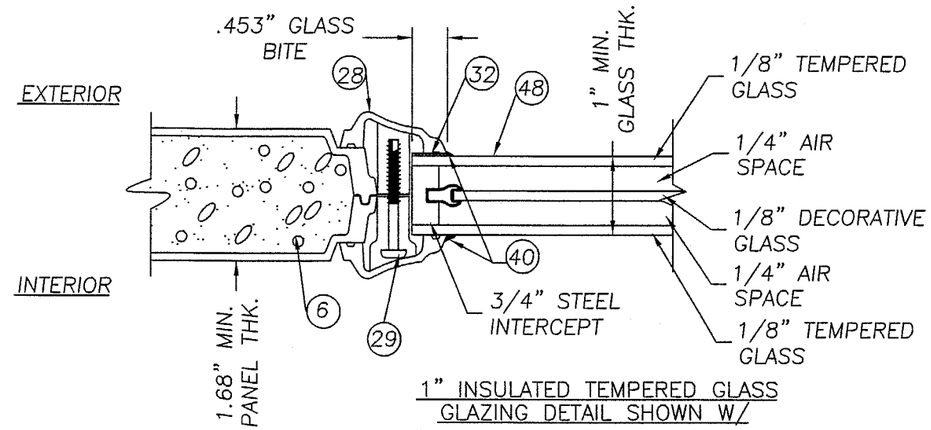

1" INSULATED TEMPERED GLASS GLAZING DETAIL SHOWN W/ "CLASSIC CRAFT" SMC LITE FRAME (REQUIRED FOR DOOR PANELS)

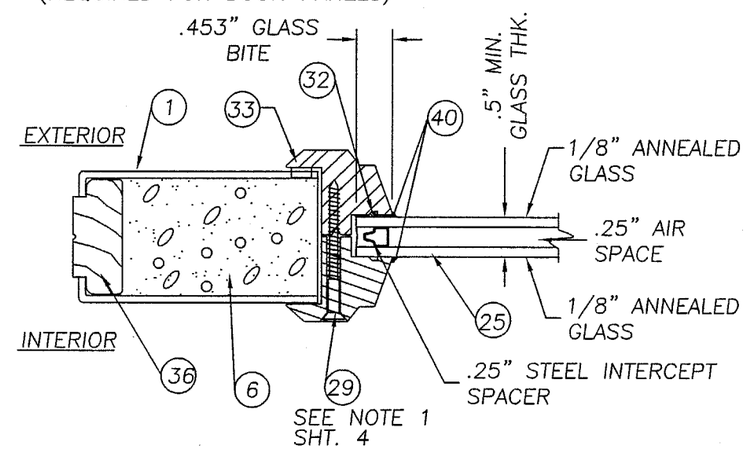

.5" INSULATED GLASS W/ PVC LITE FRAME GLAZING DETAIL (SIDELITES ONLY)

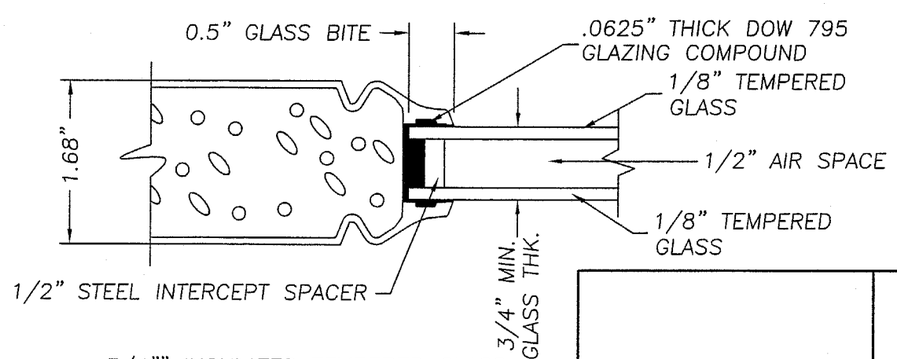

3/4"" INSULATED TEMPERED GLASS GLAZING DETAIL SHOWN W/ "CLASSIC CRAFT" INTEGRAL GLAZING (SIDELITES ONLY)

Approved as complying with the Florida Buiding Code
Date APRIL 3, 2003
NOA# 01-1219.01
Miami Dade Product Control Division
By

THERMA-TRU CORPORATION
1687 WOODLANDS DRIVE
MAUMEE, OHIO
PH. (800) 537-8827

PRODUCT: "CLASSIC CRAFT 3/4 OVAL" SINGLE & DOUBLE OUTSWING 8'0 FIBERGLASS DOOR

PART OR ASSEMBLY: BILL OF MATERIALS & GLAZING DETAIL

REVISIONS

NO.	DATE		BY
1	2/6/03	GENERAL REVISION	TJH

RW BUILDING CONSULTANTS, INC.
813.659.9197

DATE: 11/7/01
SCALE: NTS
DWG. BY: WLN
CHK. BY: RW
DRAWING NO.: S-2177
SHEET 8 OF 8