MIAMI-DADE

BUILDING CODE COMPLIANCE OFFICE (BCCO)
PRODUCT CONTROL DIVISION

MIAMI-DADE COUNTY, FLORIDA
METRO-DADE FLAGLER BUILDING
140 WEST FLAGLER STREET, SUITE 1603
MIAMI, FLORIDA 33130-1563
(305) 375-2901 FAX (305) 375-2908

NOTICE OF ACCEPTANCE (NOA)

Therma-Tru Corporation
1687 Woodlands Drive
Maumee, Ohio 43537

SCOPE:
This NOA is being issued under the applicable rules and regulations governing the use of construction materials. The documentation submitted has been reviewed by Miami-Dade County Product Control Division and accepted by the Board of Rules and Appeals (BORA) to be used in Miami Dade County and other areas where allowed by the Authority Having Jurisdiction (AHJ).

This NOA shall not be valid after the expiration date stated below. The Miami-Dade County Product Control Division (In Miami Dade County) and/or the AHJ (in areas other than Miami Dade County) reserve the right to have this product or material tested for quality assurance purposes. If this product or material fails to perform in the accepted manner, the manufacturer will incur the expense of such testing and the AHJ may immediately revoke, modify, or suspend the use of such product or material within their jurisdiction. BORA reserves the right to revoke this acceptance, if it is determined by Miami-Dade County Product Control Division that this product or material fails to meet the requirements of the applicable building code.

This product is approved as described herein, and has been designed to comply with the High Velocity Hurricane Zone of the Florida Building Code.

DESCRIPTION: "Classic Craft" 8'0 Outswing Opaque Fiberglass Door w & w/o Sidelites

APPROVAL DOCUMENT: Drawing No. **S-2162**, titled "Classic Craft Opaque" Single & Double Outswing 8'0 Fiberglass Door, sheets 1 through 7, prepared by RW Building Consultants, Inc., dated 11/10/01, with revision #2 dated 5/27/02, bearing the Miami-Dade County Product Control Approval stamp with the Notice of Acceptance number and approval date by the Miami-Dade County Product Control Division.

MISSILE IMPACT RATING: None

LABELING: Each unit shall bear a permanent label with the manufacturer's name or logo, city, state and following statement: "Miami-Dade County Product Control Approved", unless otherwise noted herein.

RENEWAL of this NOA shall be considered after a renewal application has been filed and there has been no change in the applicable building code negatively affecting the performance of this product.

TERMINATION of this NOA will occur after the expiration date or if there has been a revision or change in the materials, use, and/or manufacture of the product or process. Misuse of this NOA as an endorsement of any product, for sales, advertising or any other purposes shall automatically terminate this NOA. Failure to comply with any section of this NOA shall be cause for termination and removal of NOA.

ADVERTISEMENT: The NOA number preceded by the words Miami-Dade County, Florida, and followed by the expiration date may be displayed in advertising literature. If any portion of the NOA is displayed, then it shall be done in its entirety.

INSPECTION: A copy of this entire NOA shall be provided to the user by the manufacturer or its distributors and shall be available for inspection at the job site at the request of the Building Official.
This NOA consists of this page 1 as well as approval document mentioned above
The submitted documentation was reviewed by **Manuel Perez, P.E.**

PRODUCT CONTROL ACCEPTED

THERMA-TRU®

"CLASSIC CRAFT" FIBERGLASS DOOR

8'0 OUTSWING WITH & WITHOUT SIDELITES

GENERAL NOTES

1. THIS PRODUCT IS DESIGNED TO MEET THE FLORIDA BUILDING CODE.
2. WOOD BUCKS BY OTHERS, MUST BE ANCHORED PROPERLY TO TRANSFER LOADS TO THE STRUCTURE.
3. PRODUCT ANCHORS SHALL BE AS LISTED AND SPACED AS SHOWN ON DETAILS. ANCHOR EMBEDMENT TO BASE MATERIAL SHALL BE BEYOND WALL DRESSING OR STUCCO.
4. DESIGNED PRESSURE RATING SEE TABLE SHEET 1.
5. THIS PRODUCT MEETS THE WATER REQUIREMENTS FOR "HIGH VELOCITY HURRICANE ZONES" WITH USE OF HIGH DAM ALUMINUM BUMP THRESHOLD.
6. WHEN THIS PRODUCT IS USED IN AREAS REQUIRING WIND BORN DEBRIS PROTECTION, FLORIDA BUILDING CODE APPROVED IMPACT RESISTANT SHUTTERS ARE REQUIRED.
7. SIDELITES ARE AN OPTION AND CAN BE USED IN A SINGLE OR DOUBLE CONFIGURATION.

RESIDENTIAL INSULATED FIBERGLASS DOOR
(Common to all frame conditions)

Door & Sidelite Leaf Construction:

Face sheets: Fiberglass skin 0.125" minimum thickness, with yield strength Fy(min.)=6,000 psi

Core design: Polyurethane foam core, with1.9 lbs. density by BASF.

Panel Construction: The panel skin is constructed from a 1.68" thk. sheet molding compound (SMC). The interior cavity is filled with 1.9 lbs. density BASF polyurethane foam. The panel face sheets are glued to the wood stiles and rails. The latch and hinge stiles are LVL or LSL. The latch stile which is 4.125" X 1.50" is the latch reinforcement. The top and bottom rail are of a wood composite material. In the double door application the inactive door is fitted with an extruded aluminum astragal of 6060-T6 alloy.

Frame Construction: The frame is constructed from finger jointed pine. The header is joined to the side jambs with (3) #8 x 2 1/2" long Phillips flathead screw at each side. The mullions are secured together in a sidelite application using #8 x 2" long PFH Wood Screws (6) screws per each mullion. The units uses an Outswing Bumpface threshold, either a Low Profile or High Water Dam type.

Sidelite Glazing: The sidelite panels are sandwich glazed using a two piece lip lit frame. They are dry glazed on the exterior with an 1/8" thk. cellular glazing tape, (Stik-II Tape) and Dow 795 Silicon Compound. The lite frames are held together with a #8 x 1 1/2" long Plascrew or a #6-18 1 3/4" long PFH screw.

TABLE OF CONTENTS

SHEET #	DESCRIPTION
1	TYPICAL ELEVATIONS & GENERAL NOTES
2	VERTICAL CROSS SECTIONS & BILL OF MATERIALS
3	HORIZONTAL CROSS SECTIONS
4	HORIZONTAL CROSS SECTIONS & NOTES
5	ANCHORING LOCATIONS & DETAILS
6	ANCHORING LOCATIONS & GLAZING DETAILS
7	UNIT COMPONENTS

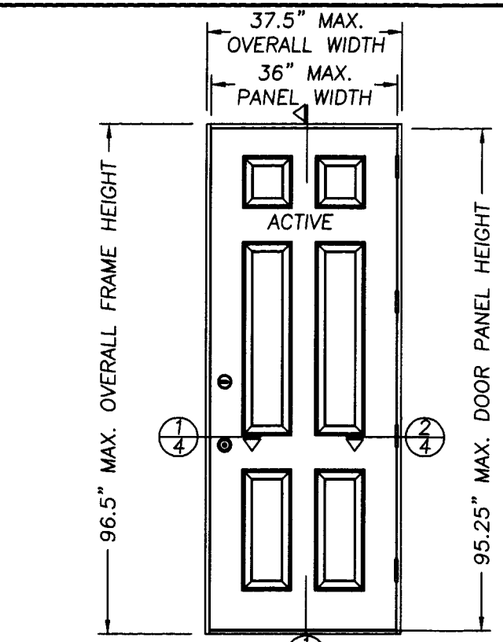

SINGLE OUTSWING UNIT

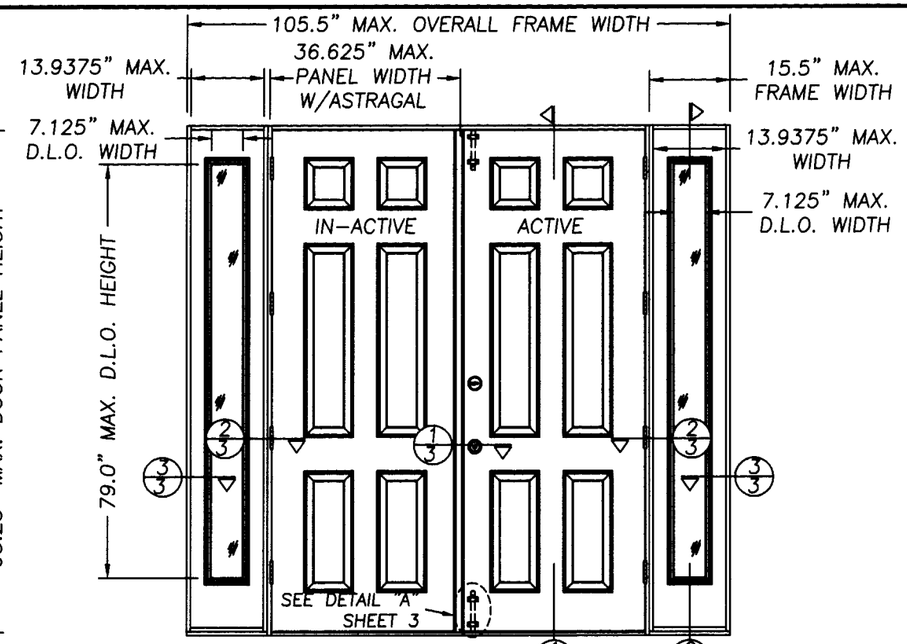

DOUBLE W/SIDELITES OUTSWING UNIT

ALL MODELS ARE VIEWED FROM INTERIOR

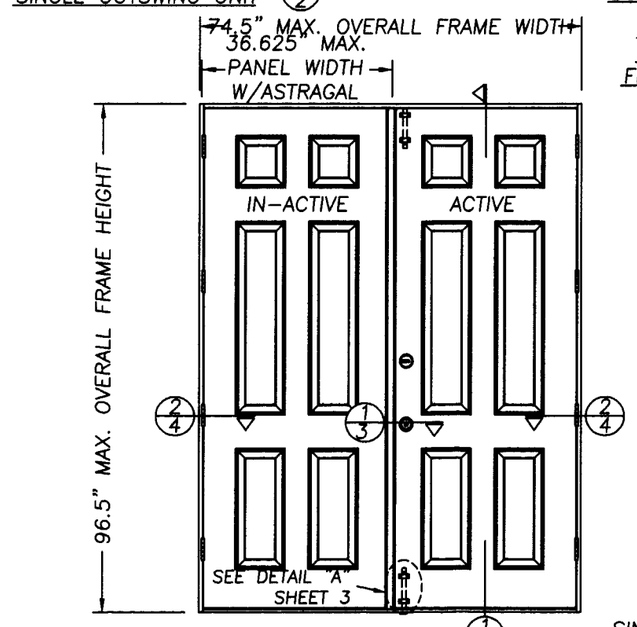

DOUBLE OUTSWING UNIT

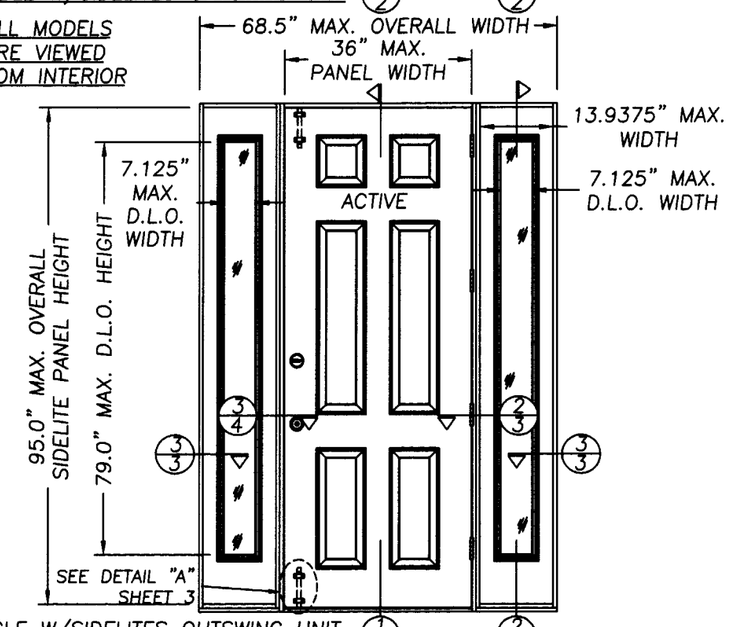

SINGLE W/SIDELITES OUTSWING UNIT

DESIGN PRESSURE RATING
WHERE WATER INFILTRATION IS REQUIRED

UNIT TYPE	WITHOUT SURFACE BOLTS	WITH SURFACE BOLTS (ACTIVE PANEL)
SINGLE	+ 75.0 PSF - 75.0 PSF	
DOUBLE	+ 47.0 PSF - 47.0 PSF	+ 60.0 PSF - 60.0 PSF
SINGLE & DOUBLE WITH SIDELITES	+ 47.0 PSF - 47.0 PSF	+ 60.0 PSF - 60.0 PSF

Approved as complying with the Florida Building Code
Date SEPT. 19, 2002
NOA# 02-0109.05
Miami Dade Product Control Division
By [signature]

THERMA-TRU CORPORATION
1687 WOODLANDS DRIVE
MAUMEE, OHIO
PH. (800) 537-8827

PRODUCT: "CLASSIC CRAFT OPAQUE" SINGLE & DOUBLE OUTSWING 8'0 FIBERGLASS DOOR

PART OR ASSEMBLY: TYPICAL ELEVATIONS & GENERAL NOTES

REVISIONS

NO.	DATE		BY
2	5/27/02	GENERAL REVISION	WLN
1	3/18/02	GENERAL REVISION	WLN

RW BUILDING CONSULTANTS, INC.
813.684.3831

DATE: 11/10/01
SCALE: N.T.S.
DWG. BY: WLN
CHK. BY: RW
DRAWING NO.: S-2162
SHEET 1 OF 7

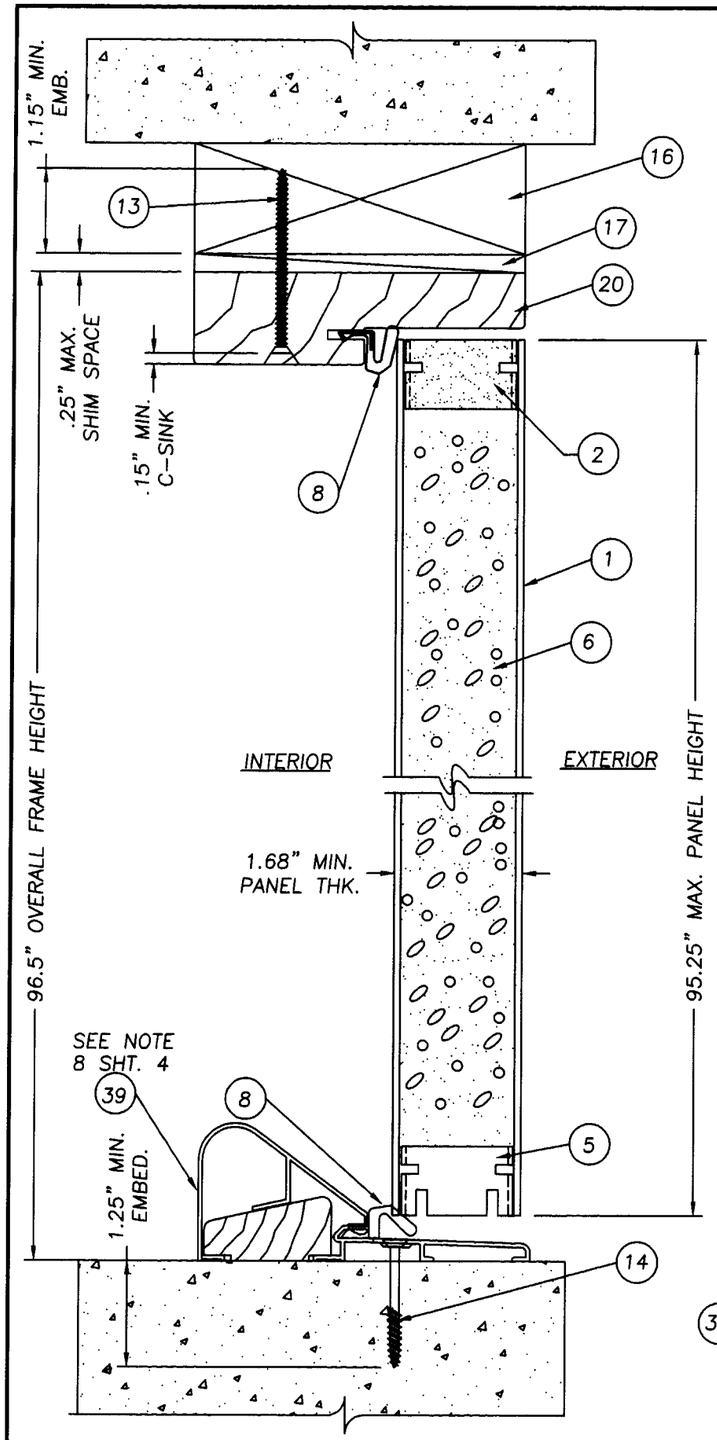

1/2 VERTICAL CROSS SECTION
DOOR PANEL W/ LOW PROFILE

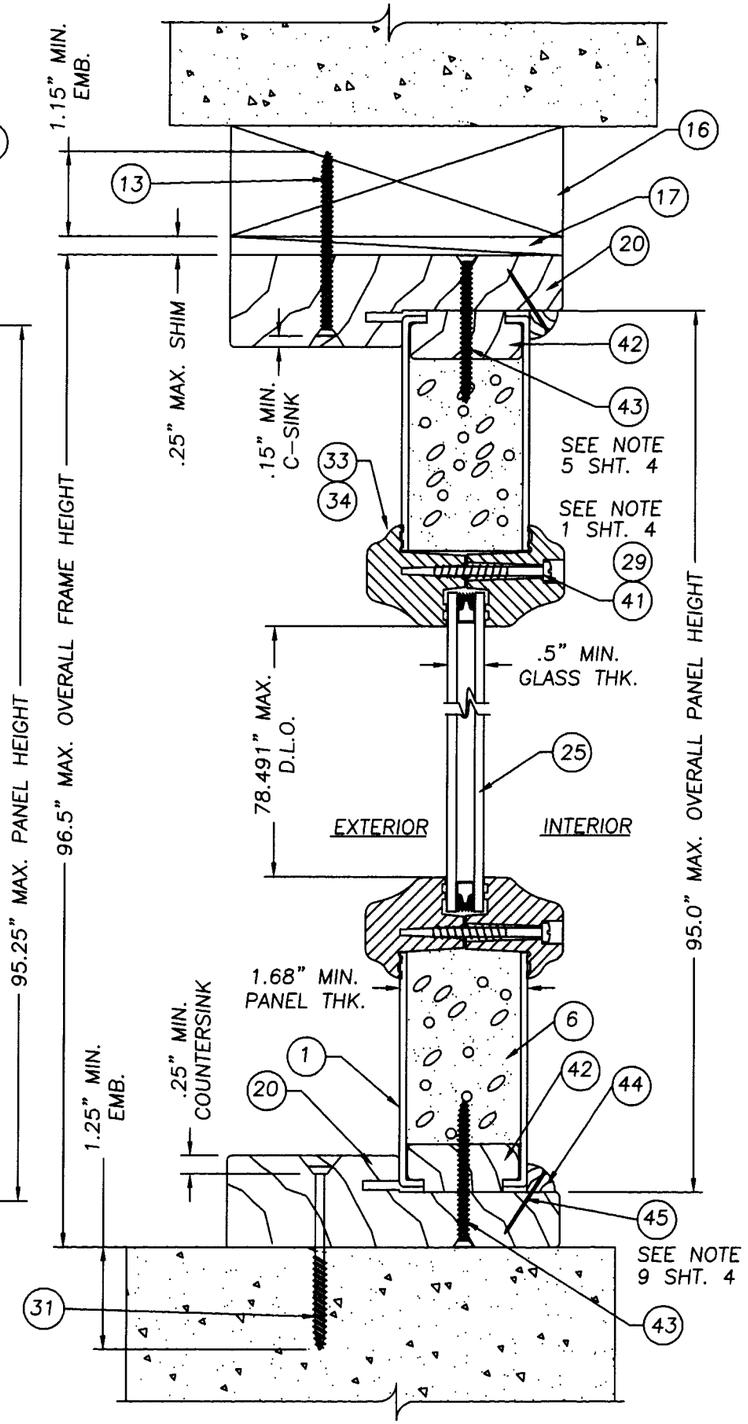

2/2 VERTICAL CROSS SECTION
SIDELITE PANEL

Item	DESCRIPTION	Material
1	DOOR SKIN .125" MIN. THK. FIBERGLASS BY THERMA TRU with yield strength Fy(min.)=6,000 psi	FIBERGLASS
2	TOP RAIL (1.50" x .94" THERMA-TRU WOOD COMPOSITE)	WOOD COMPOSITE
3	LATCH STILE/LOCK BLOCK (THERMA-TRU, LVL OR LSL & OAK 1.50" x 4.125")	WOOD COMPOSITE
4	HINGE STILE (THERMA-TRU, LVL OR LSL & OAK 1.50" x 1.50")	WOOD
5	BOTTOM RAIL (1.50" x .94" THERMA-TRU WOOD COMPOSITE)	WOOD COMPOSITE
6	POLYURETHANE FOAM (BASF, 1.9lbs. DENSITY)	FOAM
7	SHORT REACH COMPRESSION WEATHERSTRIP (THERMA-TRU)	FOAM
8	LONG REACH COMPRESSION WEATHERSTRIP (THERMA-TRU)	FOAM
9	4" x 4" HINGE .097" THK. (THERMA-TRU)	STEEL
10	#10 x 3/4" lg. PFH WOOD SCREW (Hinge to Frame)	STEEL
11	NOT USED	-
12	#10 x 2" LG. PFH WOOD SCREW	STEEL
13	#8 x 2 1/2" LG. PFH WOOD SCREW	STEEL
14	3/16" TAPCON ANCHOR (ELCO)	STEEL
15	NOT USED	-
16	2x INNER WOOD BUCK	WOOD
17	MAX. 1/4" SHIM MATERIAL	WOOD
18	KWIKSET TITAN 700 SERIES PASSAGE LOCK	-
19	ONE PIECE BUMP FACE THRESHOLD (THERMA-TRU) (NOT FOR USE IN "HIGH VELOCITY HURRICANE ZONES"	ALUM.
20	HEADER 4.656" x 1.211" (THERMA-TRU, PINE)	WOOD
21	4.563" x 1.25" STRIKE JAMB (THERMA-TRU, PINE)	WOOD
22	4.563" x 1.25" HINGE JAMB (THERMA-TRU, PINE)	WOOD
23	KWIKSET TITAN 700 SERIES DEADBOLT	-
24	ASTRAGAL WINDJAMBER II WR80T (.052" WALL)	ALUM. 6060-T6
25	GLAZING, 1/2" INSULATED TEMPERED GLASS	GLASS
26	NOT USED	-
27	#8 x 1" LG. PANHEAD SHEET METAL SCREW	STEEL
28	NOT USED	-
29	#6-18 x 1 3/4" PHILLIPS FLATHEAD SCREW (FOR ITEM #33)	STEEL
30	NOT USED	WOOD
31	3/16" TAPCON ANCHOR (ELCO, 2.5" MIN. LG.)	STEEL
32	1/8 THK. CELLULAR GLAZING TAPE (STIK-II TAPE)	-
33	PLASTIC LIP LITE FRAME (PVC, THERMA-TRU)	PVC
34	PLASTIC LIP LITE FRAME (SMC THERMA-TRU)	SMC
35	4.656" x 1.211" BLANK JAMB (THERMA-TRU, PINE)	WOOD
36	SIDELITE SIDE STILE (THERMA-TRU, 1.531" x .656" PINE)	WOOD
37	#10 x 1 3/4" LG. PFH WOOD SCREW	STEEL
38	SS. LATCH STILE (THERMA-TRU, WOOD COMPOSITE 1.531" x 4.024")	WOOD COMPOSITE
39	HIGH WATER DAM THRESHOLD (USE IS REQUIRED IN "HIGH VELOCITY HURRICANE ZONES")	ALUM.
40	SILICONE CAULK (DOW 795)	SILICONE
41	#8-10 x 1 1/2" PLASCREW (FOR ITEM #34)	STEEL
42	SIDELITE TOP & BOTTOM RAIL (THERMA-TRU, 1.531" x .656" PINE)	WOOD
43	#8 x 2" LG. PFH WOOD SCREW	STEEL
44	3/8" x 3/8" QUARTER ROUND FINGER JOINTED PINE	WOOD
45	1" L. x .040" DIA. BRAD TRIM NAIL	STEEL
46	IVES SURFACE BOLT #454 8.0" L. x .25" THK. STEEL	-
47	1/4-20 SEX BOLT W/1/4-20 FEMALE END x 1 3/4" L.	STEEL

THERMA-TRU CORPORATION
1687 WOODLANDS DRIVE
MAUMEE, OHIO
PH. (800) 537-8827

PRODUCT: "CLASSIC CRAFT OPAQUE" SINGLE & DOUBLE OUTSWING 8'0 FIBERGLASS DOOR

PART OR ASSEMBLY: VERTICAL CROSS SECTIONS

REVISIONS

NO.	DATE		BY
2	5/27/02	GENERAL REVISION	WLN
1	3/18/02	GENERAL REVISION	WLN

RW BUILDING CONSULTANTS, INC.
813.684.3831

Approved as complying with the Florida Buiding Code
Date SEPT. 19, 2002
NOA# 02-0109.05
Miami Dade Product Control Division
By [signature]

DATE: 11/10/01
SCALE: NTS
DWG. BY: WLN
CHK. BY: RW
DRAWING NO.: S-2162
SHEET 2 OF 7

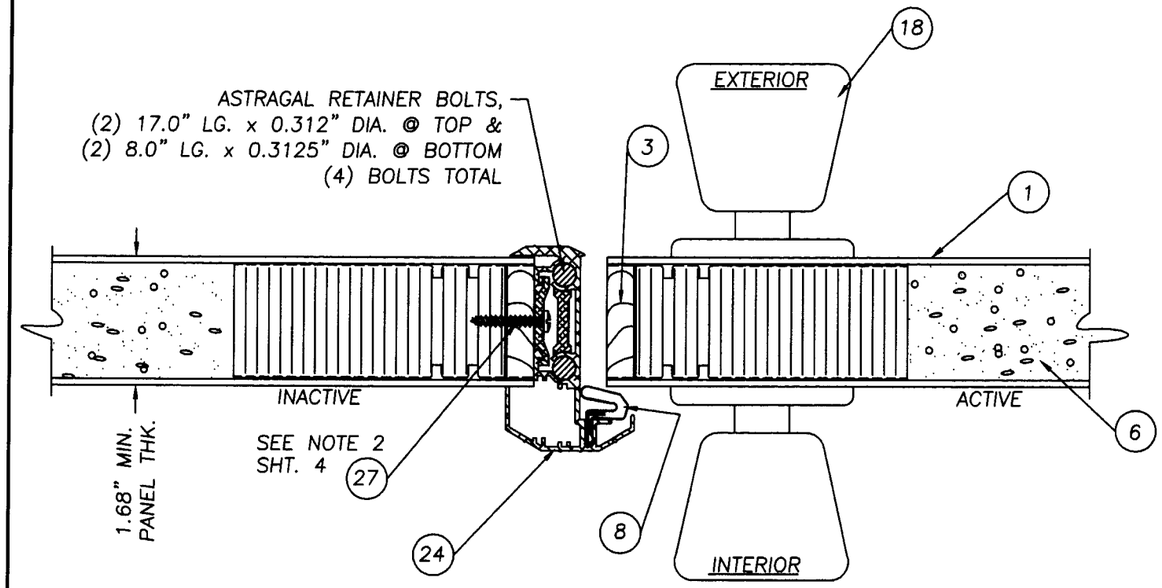

1/3 HORIZONTAL CROSS SECTION
@ ASTRAGAL
(SEE DESIGN PRESSURE RATE CHART)

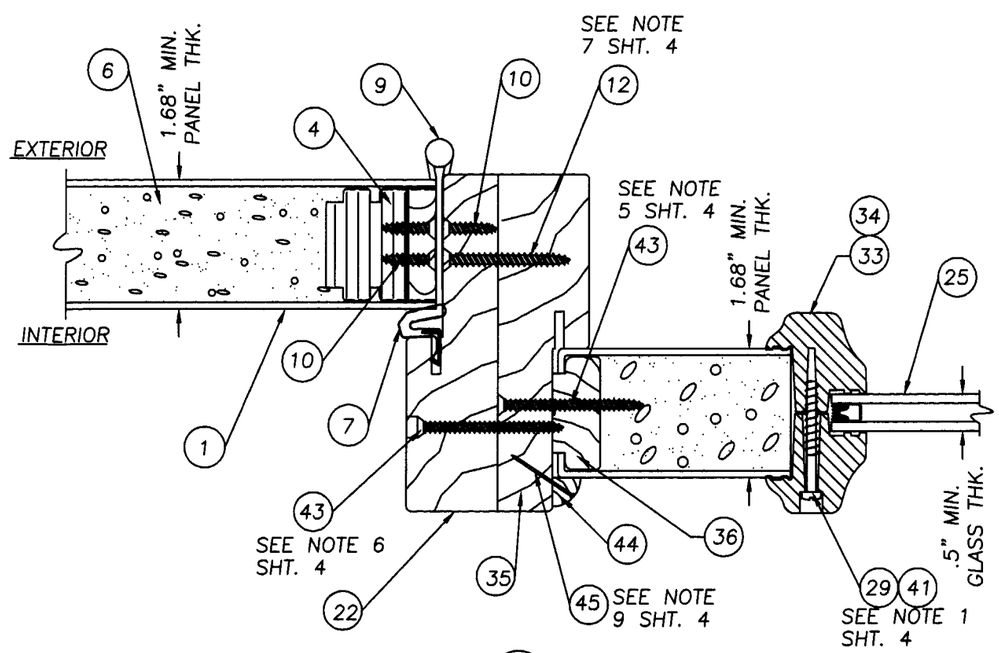

2/3 HORIZONTAL CROSS SECTION
@ HINGE JAMB TO SIDELITE

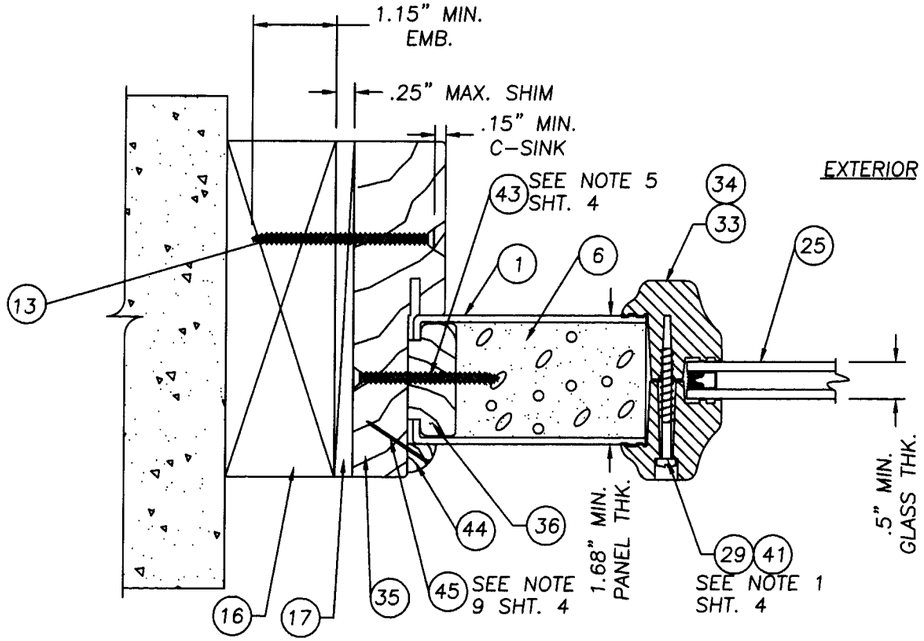

3/3 HORIZONTAL CROSS SECTION
@ SIDELITE TO BUCK

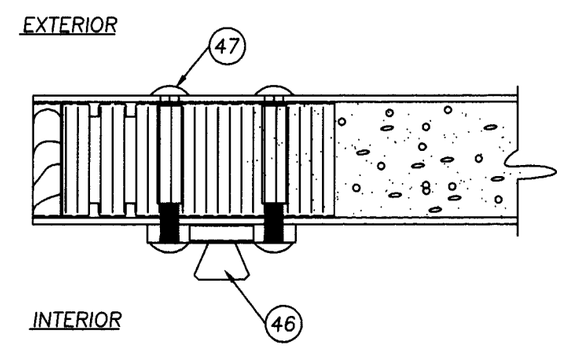

DETAIL "A"
OPTIONAL SURFACE BOLTS IN ACTIVE PANEL
(SEE DESIGN PRESSURE CHART)

Approved as complying with the Florida Buiding Code
Date SEPT. 19, 2002
NOA# 02-0109.05
Miami Dade Product Control Division
By

THERMA-TRU CORPORATION
1687 WOODLANDS DRIVE
MAUMEE, OHIO
PH. (800) 537-8827

PRODUCT: "CLASSIC CRAFT OPAQUE" SINGLE & DOUBLE OUTSWING 8' FIBERGLASS DOOR

PART OR ASSEMBLY: HORIZONTAL CROSS SECTIONS

NO.	DATE		BY
2	5/27/02	GENERAL REVISION	WLN
1	3/18/02	GENERAL REVISION	WLN

REVISIONS

RW BUILDING CONSULTANTS, INC.
813.684.3831

DATE: 11/10/01
SCALE: NTS
DWG. BY: WLN
CHK. BY: RW
DRAWING NO.: S-2162
SHEET 3 OF 7

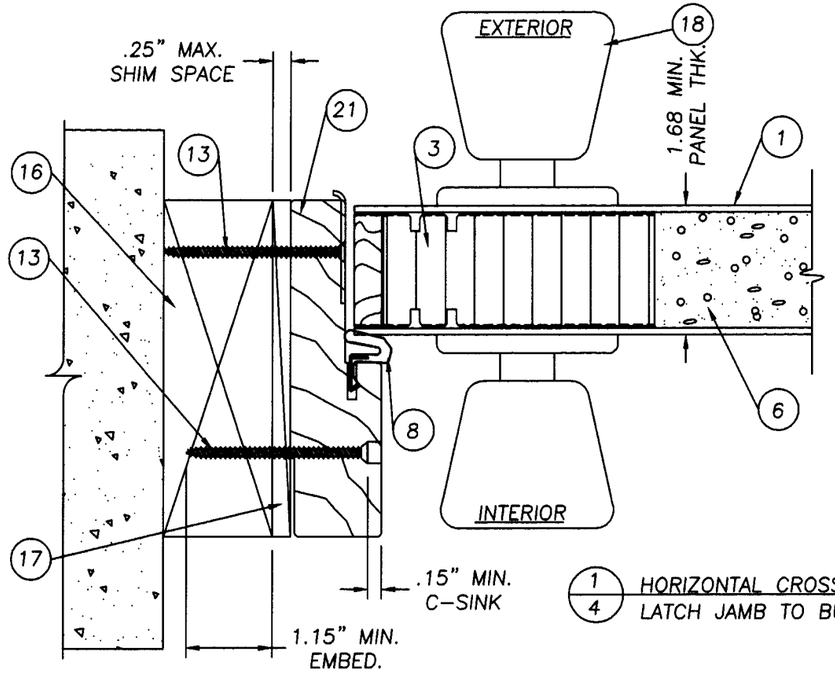

1/4 HORIZONTAL CROSS SECTION LATCH JAMB TO BUCK,

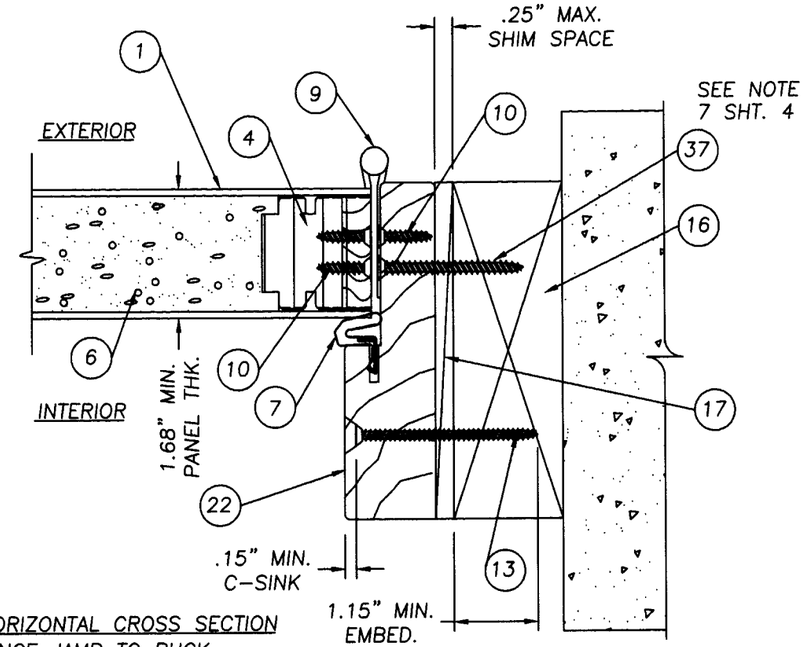

2/4 HORIZONTAL CROSS SECTION HINGE JAMB TO BUCK,

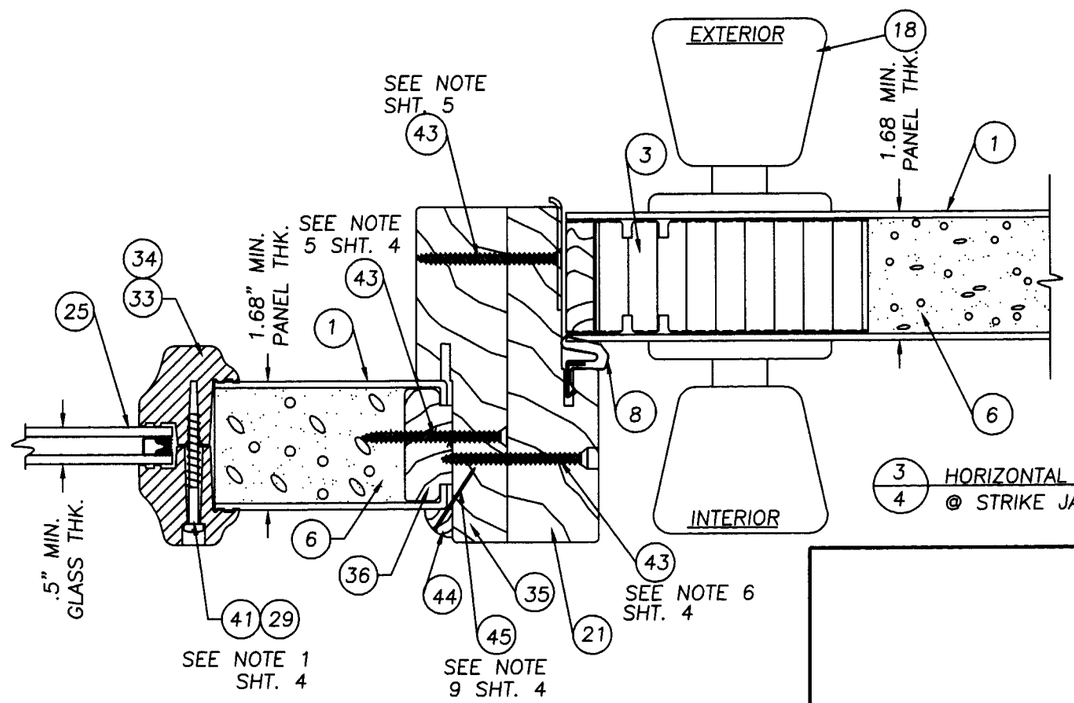

3/4 HORIZONTAL CROSS SECTION @ STRIKE JAMB TO SIDELITE

NOTES:

1. SPACING FOR (LITE FRAME SCREWS) IS AS FOLLOWS: FROM THE BOTTOM UP ON SIDES; 6.5", WITH (7) MORE SPACED AT 9.875" O.C. THERE ARE (2) SCREW BOTH TOP AND BOTTOM AT 2.125" IN FROM EACH CORNER.
2. SPACING FOR THE (9) #8 x 1" PANHEAD SCREW ATTACHING THE ASTRAGAL TO THE INACTIVE DOOR IS AS FOLLOWS: FROM THE TOP DOWN 1", 3", 5", 18.25", 54" 77", 90.25", 92.25 & 94.25".
3. THE HEAD JAMB IS ATTACHED TO THE SIDE JAMBS WITH (3) #8 x 2.5" PFH SCREWS
4. THE THRESHOLD IS ATTACHED TO THE SIDE JAMBS WITH (2) #8 x 2.5" PFH SCREWS
5. THE SIDELITE IS DIRECT SET INTO THE JAMB WITH (12) #8 x 2" PFH. WOOD SCREW. THERE ARE (4) AT EACH VERTICAL JAMB, FROM THE TOP DOWN AT 13.5", 31", 48.5" 66". THERE ARE (2) AT THE HEADER AT 4" FROM THE OUTSIDE CORNERS OF THE FRAME. THERE ARE (2) AT THE SILL, 4" FROM THE OUTSIDE CORNERS.
6. SPACING FOR #8 x 2" SCREW SECURING THE MULLIONS TOGETHER IS THE SAME AS THE PERIMETER ANCHORING SCREWS. 6" DOWN FROM THE TOP AND UP FROM THE BOTTOM WITH (4) MORE SPACED AT 16.9" O.C.
7. WHEN ATTACHING THE HINGE TO THE JAMB AND THE BUCK USE #10 x 2" SCREW. WHEN ATTACHING THE HINGE TO THE JAMB AND THE SIDELITE AT THE MULLION USE ITEM #10 x 1 3/4" SCREW.
8. THE HIGH DAM THRESHOLD IS REQUIRED WHEN SYSTEM IS INSTALLED IN "HIGH VELOCITY HURRICANE ZONES".
9. SPACING FOR THE BRAD TRIM NAIL SECURING THE QUARTER ROUND TO THE SIDELITE FRAME IS AS FOLLOWS: 2.0" FROM ALL ENDS AND A MAX. OF 12.0" O.C.

Approved as complying with the Florida Buiding Code
Date SEPT. 19, 2002
NOA# 02-0109.05
Miami Dade Product Control Division
By

THERMA-TRU CORPORATION
1687 WOODLANDS DRIVE
MAUMEE, OHIO
PH. (800) 537-8827

PRODUCT: "CLASSIC CRAFT OPAQUES" SINGLE & DOUBLE OUTSWING 8'0 FIBERGLASS DOOR

PART OR ASSEMBLY: HORIZONTAL CROSS SECTIONS & NOTES

NO.	DATE	REVISIONS	BY
2	5/27/02	GENERAL REVISION	WLN
1	3/18/02	GENERAL REVISION	WLN

RW BUILDING CONSULTANTS, INC.
813.684.3831

DATE: 11/11/01
SCALE: NTS
DWG. BY: WLN
CHK. BY: RW
DRAWING NO.: S-2162
SHEET 4 OF 7

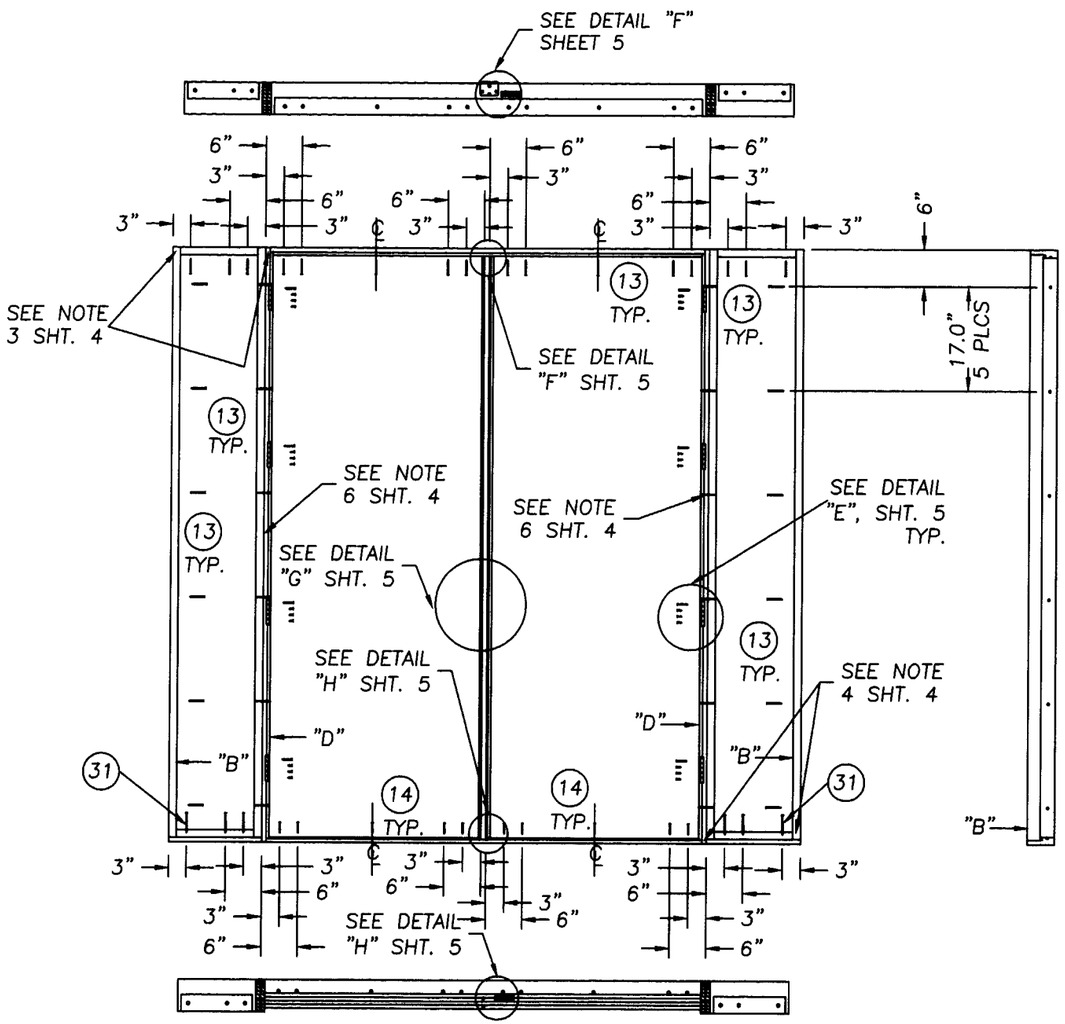

DOUBLE DOOR W/SIDELITES

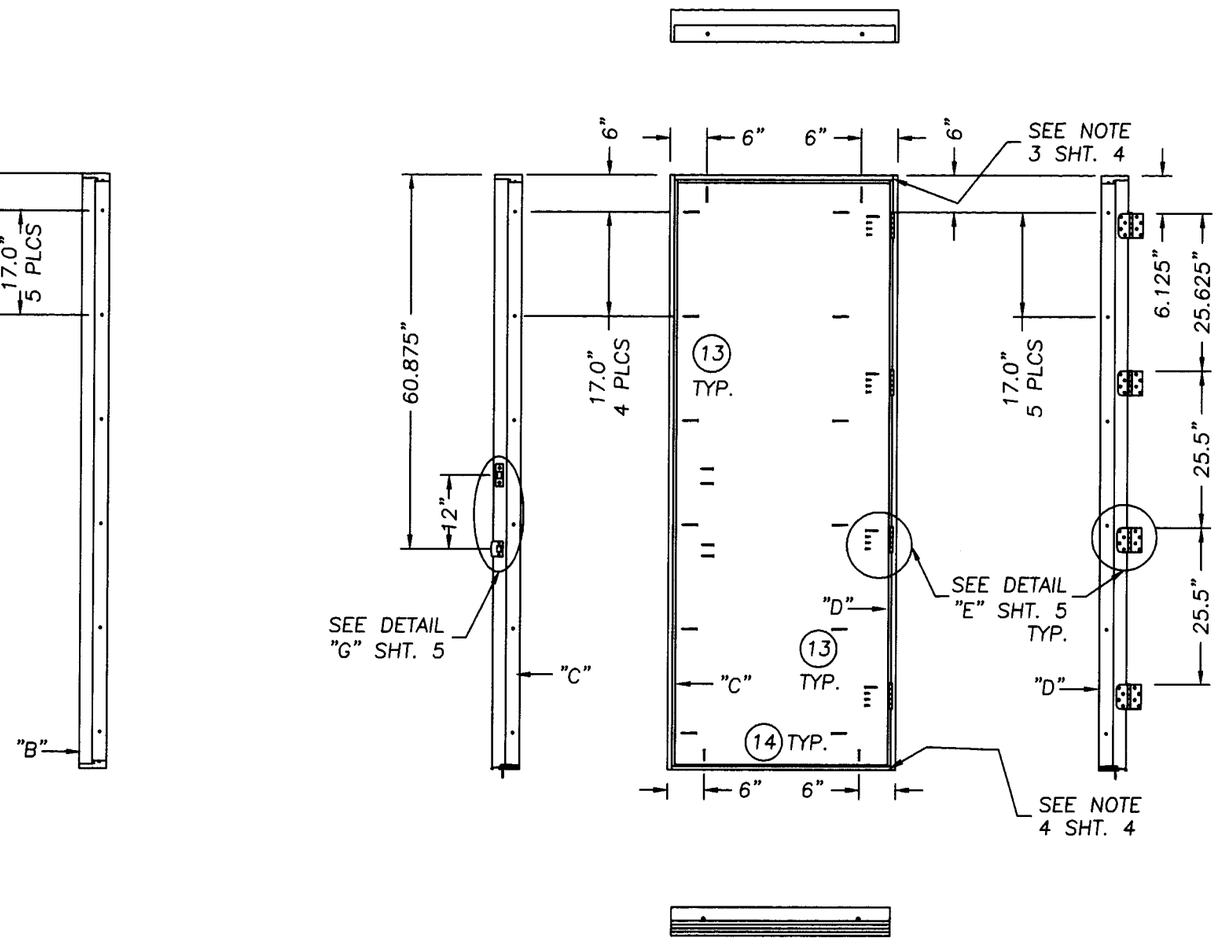

SINGLE DOOR

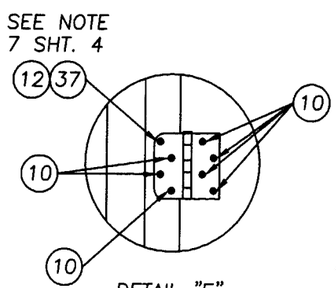

DETAIL "E"

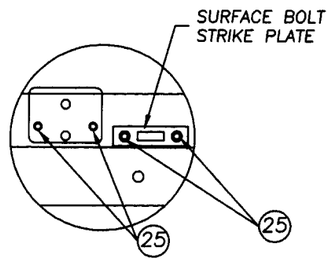

DETAIL F
ATTACH ASTRAGAL THROW BOLT STRIKE PLATE TO FRAME AS SHOWN.

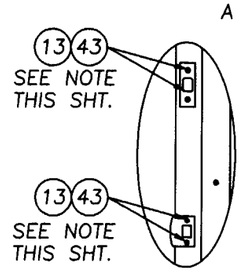

DETAIL G

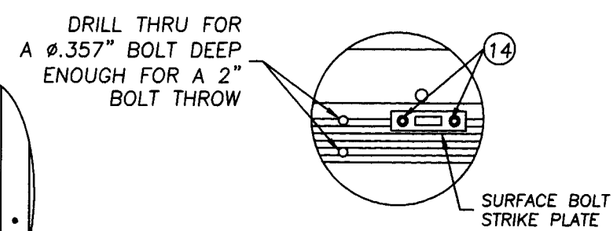

DETAIL "H"
RETAINER BOLT HOLES & OPTIONAL SURFACE BOLT STRIKE PLATE

NOTE:
USE #8 x 2 1/2" PFH WOOD SCREW TO ATTACH THE STRIKE AND DEADBOLT PLATES TO THE JAMB OR ASTRAGAL EXCEPT IN THE MULLED APPLICATION WITH THE SIDELITE USE #8 x 2" PFH WOOD SCREW.

Approved as complying with the Florida Buiding Code
Date SEPT. 19, 2002
NOA# 02-0109.05
Miami Dade Product Control Division
By Manuel Perez

THERMA-TRU CORPORATION
1687 WOODLANDS DRIVE
MAUMEE, OHIO
PH. (800) 537-8827

PRODUCT: "CLASSIC CRAFT OPAWUE" SINGLE & DOUBLE OUTSWING 8'0 FIBERGLASS DOOR

PART OR ASSEMBLY: ANCHORING LOCATIONS & DETAILS

NO.	DATE	REVISIONS	BY
2	5/27/02	GENERAL REVISION	WLN
1	3/18/02	GENERAL REVISION	WLN

RW BUILDING CONSULTANTS, INC.
813.684.3831

DATE: 11/11/01
SCALE: N.T.S.
DWG. BY: WLN
CHK. BY: RW
DRAWING NO.: S-2162
SHEET 5 OF 7

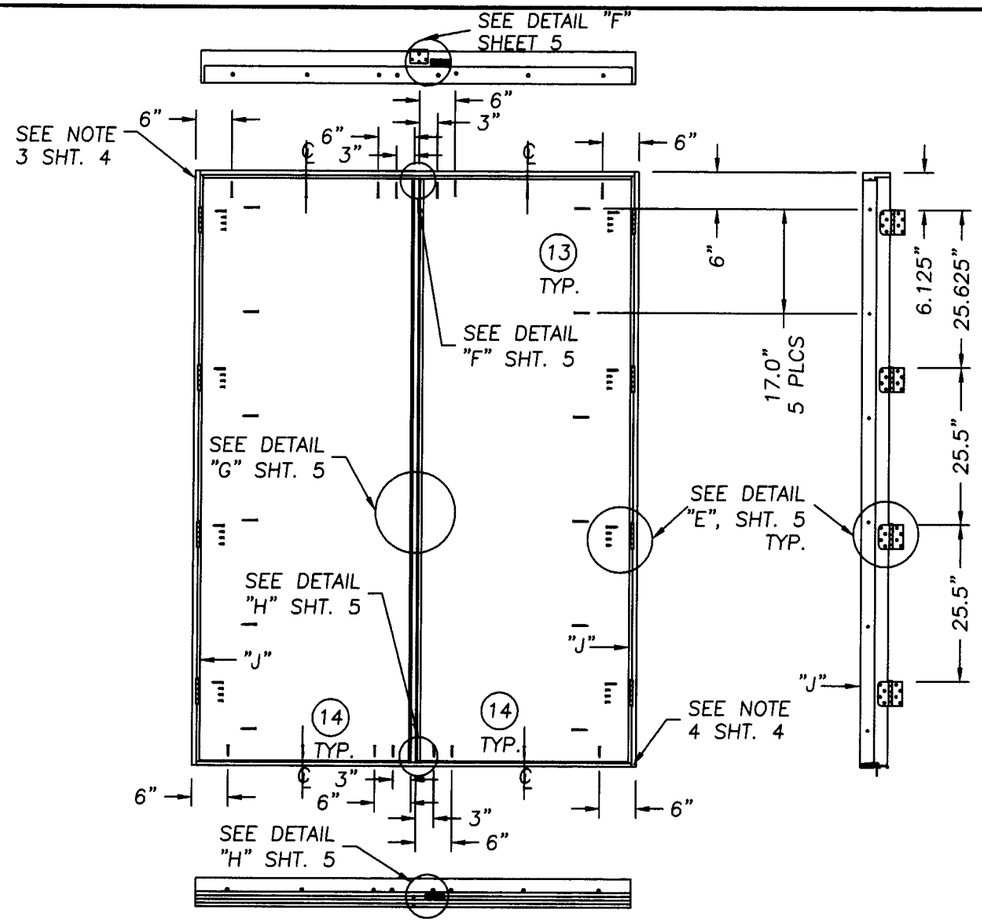

DOUBLE DOOR

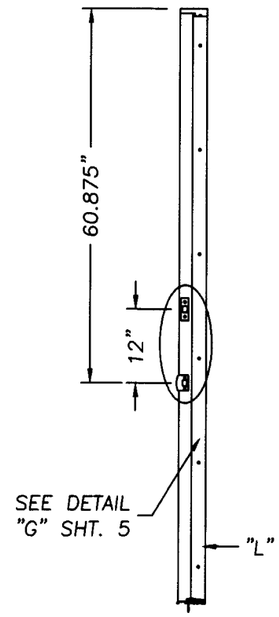

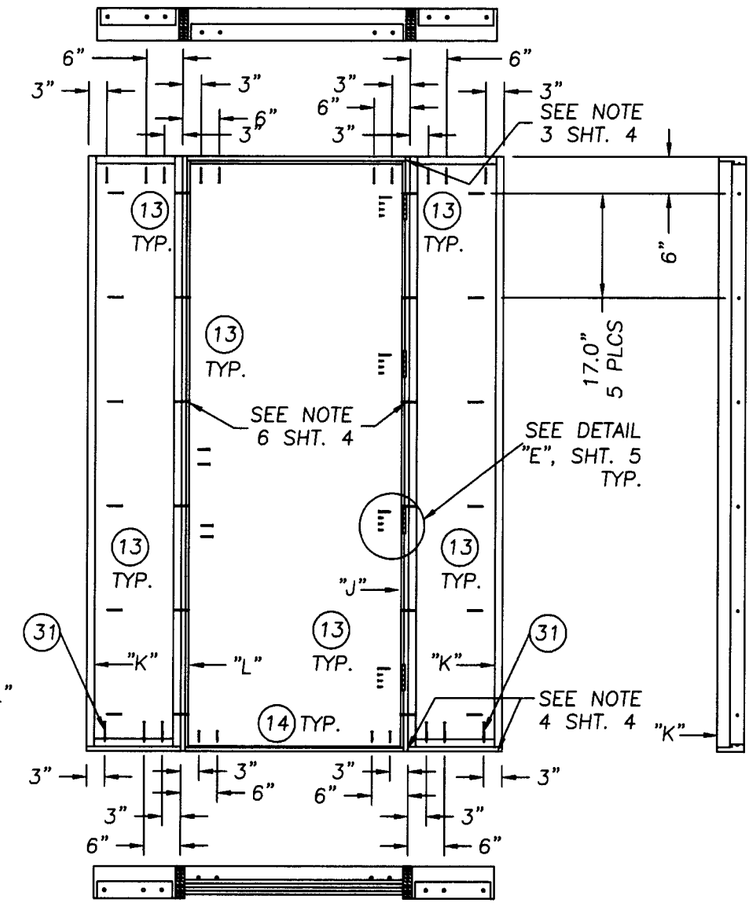

SINGLE DOOR W/SIDELITES

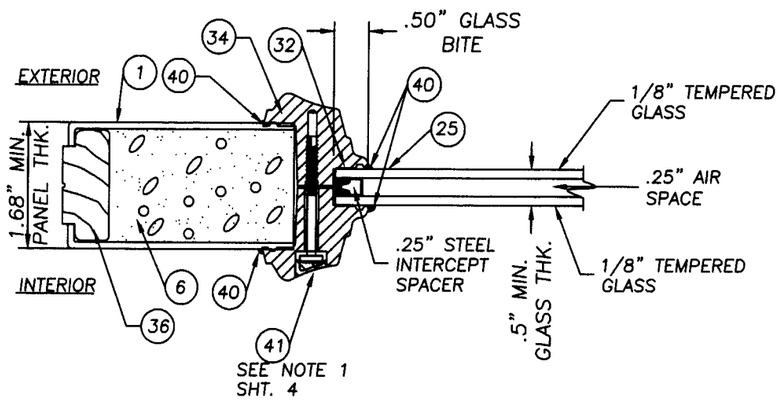

.5" INSULATED GLASS W/ SMC LITE FRAME GLAZING DETAIL

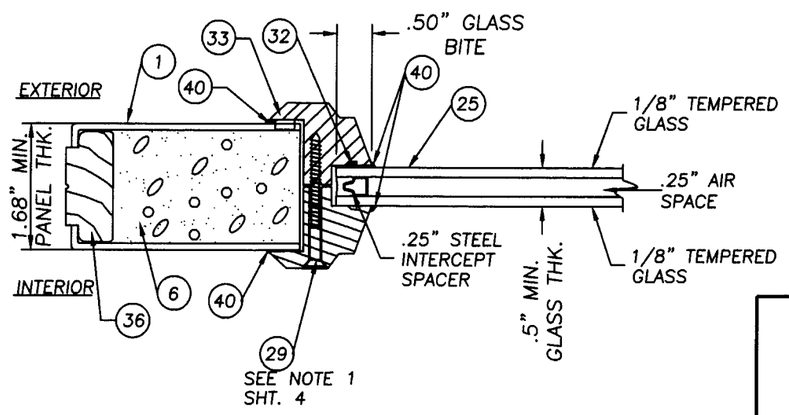

.5" INSULATED GLASS W/ PVC LITE FRAME GLAZING DETAIL

Approved as complying with the Florida Buiding Code
Date SEPT. 19, 2002
NOA# 02-0109.05
Miami Dade Product Control Division
By

THERMA-TRU CORPORATION
1687 WOODLANDS DRIVE
MAUMEE, OHIO
PH. (800) 537-8827

PRODUCT: "CLASSIC CRAFT OPAQUE" SINGLE & DOUBLE OUTSWING 8'0 FIBERGLASS DOOR

PART OR ASSEMBLY: ANCHORING LOCATIONS & GLAZING DETAILS

REVISIONS

NO.	DATE		BY
2	5/27/02	GENERAL REVISION	WLN
1	3/18/02	GENERAL REVISION	WLN

RW BUILDING CONSULTANTS, INC.
813.684.3831

DATE: 11/11/01
SCALE: N.T.S.
DWG. BY: WLN
CHK. BY: RW
DRAWING NO.: S-2162
SHEET 6 OF 7

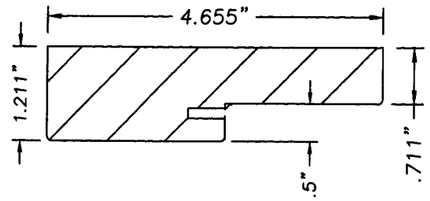

(20)(22)(21)(35) WOOD FRAME

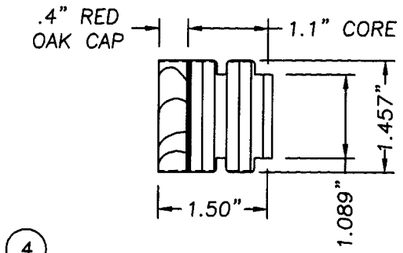

(4) HINGE SIDE STILE

CORE MATERIAL: LVL OR LSL
ALTERNATE CORE MATERIAL: PONDEROSA, RADIATA, PULAI, ELLIOTTII, TAEDA OR SUGAR PINE, DOUGLAS OR WHITE FIR, CEDAR, INCENSE CEDAR OR REDWOOD.

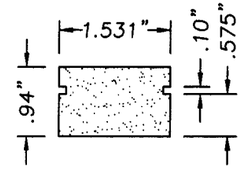

(2) TOP RAIL
WOOD COMPOSITE

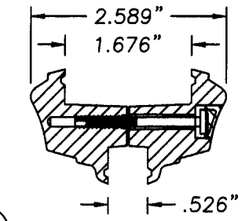

(34) PLASTIC LIP LITE FRAME
EXTRUDED SMC

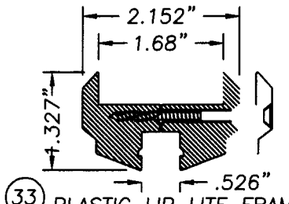

(33) PLASTIC LIP LITE FRAME
EXTRUDED PVC

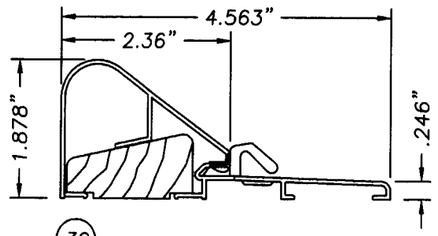

(39) HIGH DAM THRESHOLD
ALUMINUM/WOOD THRESHOLD
.050" WALL TYP.
USE IS REQUIRED IN
"HIGH VELOCITY HURRICANE ZONES"

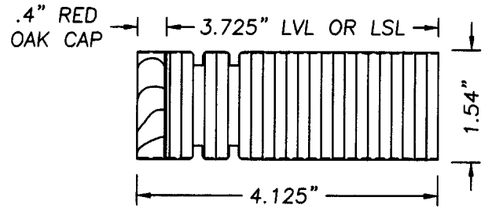

(3) LATCH SIDE STILE/ LOCK BLOCK
LVL OR LSL W/ KILN DRIED RED OAK CAP

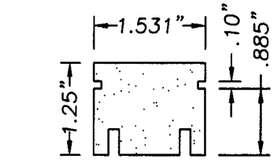

(5) BOTTOM RAIL
WOOD COMPOSITE

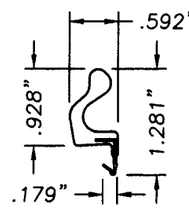

(8) LONG REACH
COMPRESSION WEATHERSTRIP
FOAM CELL CORE
W/VINYL JACKET

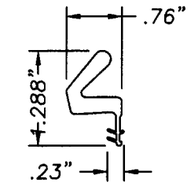

(7) COMPRESSION WEATHERSTRIP
BY THERMA-TRU
FOAM CELL CORE
W/VINYL JACKET

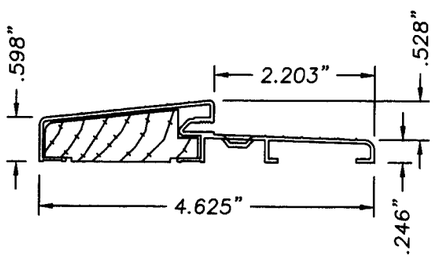

(19) OPTIONAL LOW PROFILE OUTSWING
BUMP FACE ALUMINUM/WOOD THRESHOLD
.050" WALL TYP.
NOT FOR USE IN
"HIGH VELOCITY HURRICANE ZONES"

ASTRAGAL RETAINER BOLTS,
(2) 17.0" LG. X 0.3125" DIA.
@ TOP & (2) 8.0" LG. X
0.3125" DIA. @ BOTTOM
(4) BOLTS TOTAL

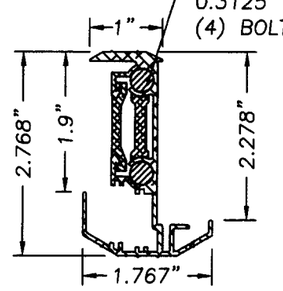

(24) WINDJAMBER II WR80T
ASTRAGAL (ALUMINUM .052" WALL TYP.)

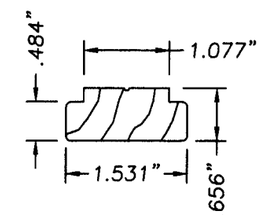

(42) SIDELITE TOP & BOTTOM RAIL
FINGER JOINTED PONDEROSA PINE

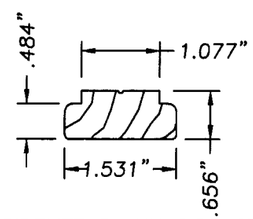

(36) SIDELITE BLANK SIDE STILE
FINGER JOINTED PONDEROSA PINE

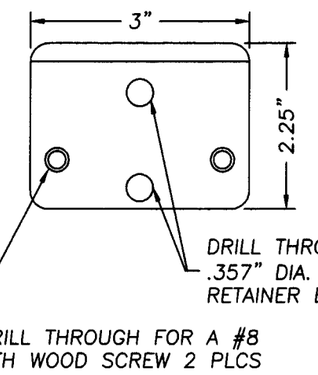

WINDJAMBER II WR80T STRIKE PLATE

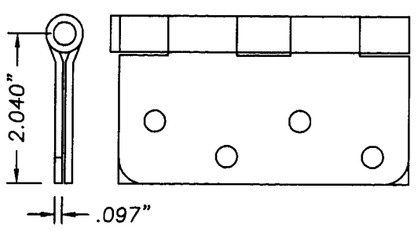

(9) 4 x 4 STEEL DOOR HINGE

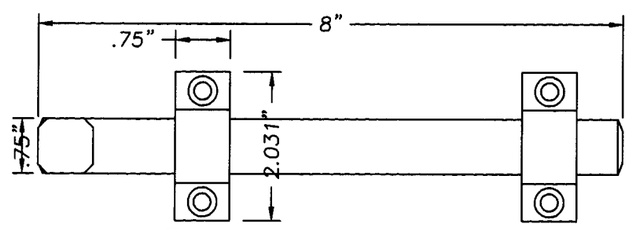

(48) SURFACE BOLT (IVES, .25" STEEL)

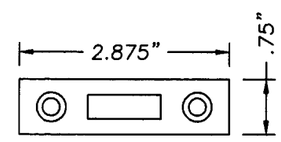

SURFACE BOLT STRIKE (.125" STEEL)

Approved as complying with the Florida Building Code
Date SEPT. 19, 2002
NOA# 02-0109.05
Miami Dade Product Control Division
By [signature]

THERMA-TRU CORPORATION
1687 WOODLANDS DRIVE
MAUMEE, OHIO
PH. (800) 537-8827

PRODUCT: "CLASSIC CRAFT OPAQUE" SINGLE DOUBLE OUTSWING 8'0 FIBERGLASS DOOR

PART OR ASSEMBLY: UNIT COMPONENTS

NO.	DATE	REVISIONS	BY
2	5/27/02	GENERAL REVISION	WLN
1	3/18/02	GENERAL REVISION	WLN

RW BUILDING CONSULTANTS, INC.
813.684.3831

DATE: 11/11/01
SCALE: N.T.S
DWG. BY: WLN
CHK. BY: RW
DRAWING NO.: S-2162
SHEET 7 OF 7