MIAMI-DADE

BUILDING CODE COMPLIANCE OFFICE (BCCO)
PRODUCT CONTROL DIVISION

MIAMI-DADE COUNTY, FLORIDA
METRO-DADE FLAGLER BUILDING
140 WEST FLAGLER STREET, SUITE 1603
MIAMI, FLORIDA 33130-1563
(305) 375-2901 FAX (305) 375-2908

NOTICE OF ACCEPTANCE (NOA)

PGT Industries, Inc.
1070 Technology Drive
Nokomis, FL 34275

SCOPE:

This NOA is being issued under the applicable rules and regulations governing the use of construction materials. The documentation submitted has been reviewed by Miami-Dade County Product Control Division and accepted by the Board of Rules and Appeals (BORA) to be used in Miami Dade County and other areas where allowed by the Authority Having Jurisdiction (AHJ).

This NOA shall not be valid after the expiration date stated below. The Miami-Dade County Product Control Division (In Miami Dade County) and/or the AHJ (in areas other than Miami Dade County) reserve the right to have this product or material tested for quality assurance purposes. If this product or material fails to perform in the accepted manner, the manufacturer will incur the expense of such testing and the AHJ may immediately revoke, modify, or suspend the use of such product or material within their jurisdiction. BORA reserves the right to revoke this acceptance, if it is determined by Miami-Dade County Product Control Division that this product or material fails to meet the requirements of the applicable building code.

This product is approved as described herein, and has been designed to comply with the High Velocity Hurricane Zone of the Florida Building Code.

DESCRIPTION: Series "PW-701" Aluminum Fixed Window – Small Missile Impact Resistant

APPROVAL DOCUMENT: Drawing No. **4233**, sheets 1 through 4, dated 09/28/01, with revision E dated 11/15/02, titled "Aluminum Picture Window (Small Missile)", prepared by manufacturer, signed and sealed by Robert L. Clark, P.E., bearing the Miami-Dade County Product Control Approval stamp with the Notice of Acceptance number and approval date by the Miami-Dade County Product Control Division.

MISSILE IMPACT RATING: Small Missile Impact Resistant

LABELING: Each unit shall bear a permanent label with the manufacturer's name or logo, city, state and following statement: "Miami-Dade County Product Control Approved", unless otherwise noted herein.

RENEWAL of this NOA shall be considered after a renewal application has been filed and there has been no change in the applicable building code negatively affecting the performance of this product.

TERMINATION of this NOA will occur after the expiration date or if there has been a revision or change in the materials, use, and/or manufacture of the product or process. Misuse of this NOA as an endorsement of any product, for sales, advertising or any other purposes shall automatically terminate this NOA. Failure to comply with any section of this NOA shall be cause for termination and removal of NOA.

ADVERTISEMENT: The NOA number preceded by the words Miami-Dade County, Florida, and followed by the expiration date may be displayed in advertising literature. If any portion of the NOA is displayed, then it shall be done in its entirety.

INSPECTION: A copy of this entire NOA shall be provided to the user by the manufacturer or its distributors and shall be available for inspection at the job site at the request of the Building Official.
This NOA consists of this page 1 as well as approval document mentioned above.
The submitted documentation was reviewed by **Manuel Perez, P.E.**

PGT Industries, Inc.

NOTICE OF ACCEPTANCE: EVIDENCE SUBMITTED

(For File ONLY. Not part of NOA)

A. DRAWINGS

1. Manufacturer's die drawings and sections.
2. Drawing No. **4233**, sheets 1 through 4, dated 09/28/01, with revision E dated 11/15/02, titled "Aluminum Picture Window (Small Missile)", prepared by manufacturer, signed and sealed by Robert L. Clark, P.E.

B. TESTS

1. Test reports on 1) Air Infiltration Test, per SFBC, PA 202-94
   2) Uniform Static Air Pressure Test, Loading per SFBC PA 202-94
   3) Water Resistance Test, per SFBC, PA 202-94
   4) Small Missile Impact Test per SFBC, PA 201-94
   5) Cyclic Wind Pressure Loading per SFBC, PA 203-94

   along with marked-up drawings and installation diagram of a series PW-820 aluminum picture window, prepared by Fenestration Testing Laboratory, Inc., Test Report No. **FTL-3168**, dated July 16, 2001, signed and sealed by Luis A. Figueredo, P.E..

C. CALCULATIONS

1. Anchor calculations and structural analysis, prepared by manufacturer, dated 10/15/01, revised on 11/15/02, signed and sealed by Robert L. Clark, P.E.

D. MATERIAL CERTIFICATIONS

1. None.

E. STATEMENTS

1. Statement letter of conformance, dated January 14, 2002, signed and sealed by Robert L. Clark, P.E.
2. Statement letter of no financial interest, dated January 14, 2002, signed and sealed by Robert L. Clark, P.E.
3. Laboratory compliance letter for Test Report No. **FTL- 3168**, issued by Fenestration Testing Laboratory, Inc., dated July 24, 2001, signed and sealed by Luis Figueredo, P.E.

F. OTHER

1. None.

Manuel Perez, P.E.
Product Control Examiner
NOA No 02-0123.03
Expiration Date: December 13, 2007
Approval Date: December 13, 2002

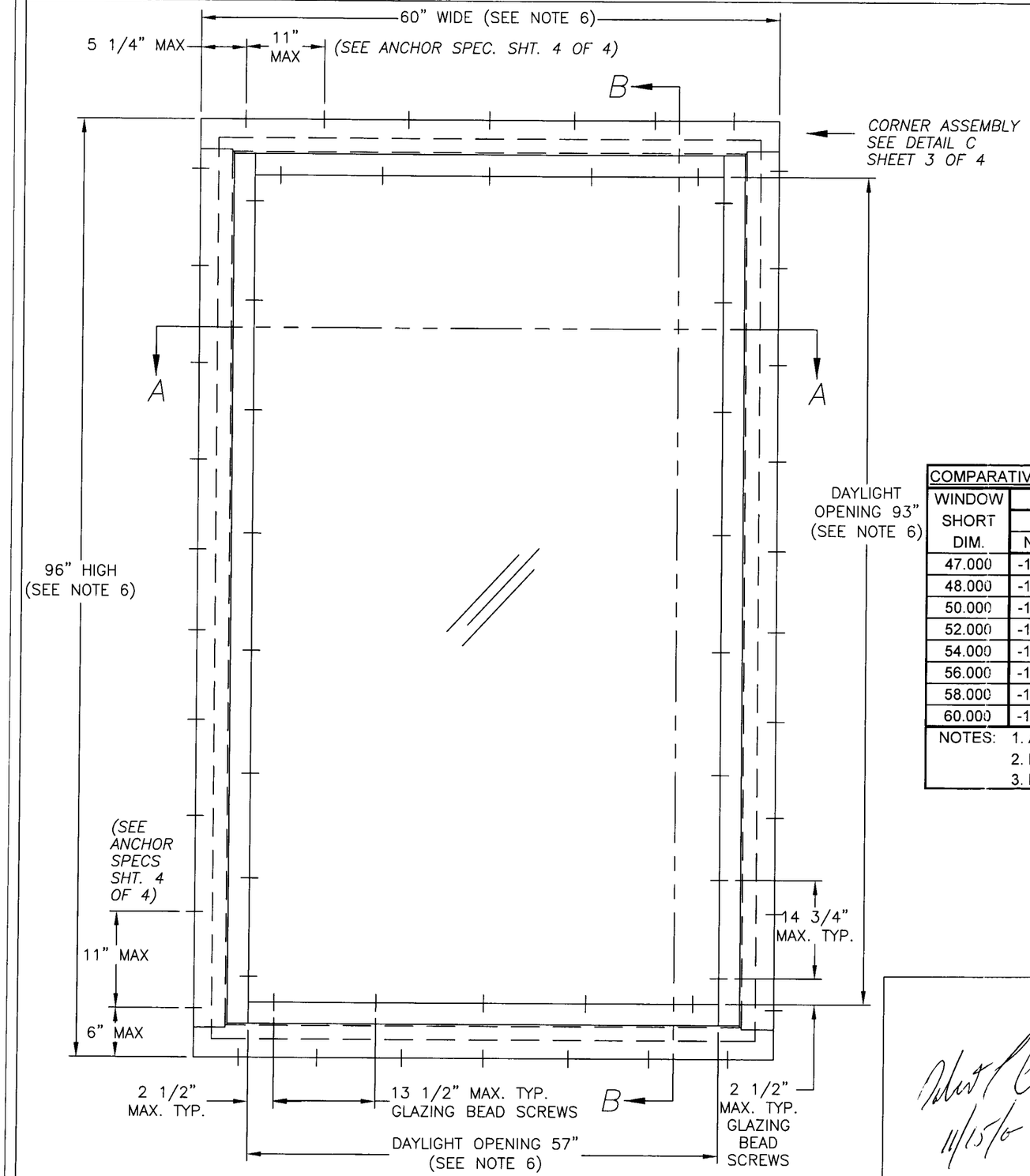

SEE SHEET 2 OF 4 FOR SECTION DETAILS

SMALL MISSILE IMPACT PICTURE WINDOW

1. GLAZING: 7/16" LAMINATED GLASS CONSISTING OF (2) LITES OF 3/16" TEMPERED GLASS WITH A .090 PVB INTERLAYER.
2. DESIGN PRESSURE RATING: SEE TABLE 1
   A. NEGATIVE DESIGN LOADS BASED ON TESTED PRESSURE AND GLASS TABLE ASTM E 1300-98.
   B. POSITIVE DESIGN LOADS BASED ON WATER TEST PRESSURE AND GLASS TABLE ASTM E 1300-98.
3. ANCHORAGE: SINGLE ROW OF FASTENERS LOCATED AS FOLLOWS AND PER SPECS SHT. 4 OF 4..
   MAX. 5 1/4" FROM CORNERS AT HEAD & SILL.
   MAX. 6" FROM CORNERS AT JAMBS.
   MAX. SPACING 11" AT HEAD, SILL & JAMBS.
   ANCHORING WITH #12 WOOD SCREWS EMBEDED 1 1/2" AT SAME LOCATIONS LIMITS PRESSURE RATING (SEE TABLE1).
4. SHUTTER REQUIREMENT: MIAMI-DADE COUNTY APPROVED SHUTTERS ARE ONLY REQUIRED AT INSTALLATIONS BELOW 30 FEET. (NONE REQUIRED AT INSTALLATIONS ABOVE 30 FT. GRADE).
5. NARROW JOINT SEALANT IS USED ON ALL 4 CORNERS OF THE FRAME AND ON THE OUTSIDE OF THE FRAME TO SEAL EXPOSED SCREWS.
6. MAX. WINDOW AREA = 40 SQ. FT. & DAYLIGHT OPENING AREA = 36.82 SQ. FT.
7. REFERENCE TEST REPORT: FTL-3168
8. SEE SHEET 3 OF 4 FOR GLAZING DETAIL.

COMPARATIVE ANALYSIS: TABLE 1

WINDOW SHORT DIM.	WINDOW LONG DIMENSION															
	74.000		76.000		81.000		84.000		87.000		90.000		93.000		96.000	
	NEG	POS	NEG	POS	NEG	POS	NEG	POS	NEG	POS	NEG	POS	NEG	POS	NEG	POS
47.000	-150.0	82.0	-150.0	82.0	-150.0	82.0	-150.0	82.0	-150.0	82.0	-150.0	82.0	-150.0	82.0	-150.0	82.0
48.000	-150.0	82.0	-150.0	82.0	-150.0	82.0	-150.0	82.0	-150.0	82.0	-150.0	82.0	-150.0	82.0	-149.7	82.0
50.000	-150.0	82.0	-150.0	82.0	-150.0	82.0	-150.0	82.0	-150.0	82.0	-150.0	82.0	-146.2	82.0	-140.4	82.0
52.000	-150.0	82.0	-150.0	82.0	-150.0	82.0	-150.0	82.0	-149.1	82.0	-143.9	82.0	-138.5	82.0	-132.9	82.0
54.000	-150.0	82.0	-150.0	82.0	-150.0	82.0	-147.1	82.0	-142.4	82.0	-137.3	82.0	-132.0	82.0	-126.6	82.0
56.000	-150.0	82.0	-150.0	82.0	-146.5	82.0	-141.5	82.0	-136.8	82.0	-131.7	82.0	-126.8	82.0	-122.8	82.0
58.000	-150.0	82.0	-150.0	82.0	-142.4	82.0	-137.0	82.0	-131.9	82.0	-127.2	82.0	-123.3	82.0	-119.3	82.0
60.000	-150.0	82.0	-147.5	82.0	-138.4	82.0	-133.0	82.0	-128.0	82.0	-124.0	82.0	-120.1	82.0	-116.1	82.0

NOTES:
1. ALL SMALLER WINDOW SIZES NOT SHOWN IN TABLE ARE NEGATIVE **-150.0 PSF** AND POSTIVE **82.0 PSF**
2. PRESSURES ARE BASED ON ANCHORING WITH 1/4" TAPCONS.
3. NEGATIVE PRESSURES ARE LIMITED TO **-87.3 P.S.F.** WHEN ANCHORING WITH #12 WOOD SCREWS

Revsd By:	Date:	Revisions:
F.K.	11/15/02	E-REVISE RATING TABLE
F.K.	6/20/02	D-UPDATED RATING TABLE
F.K.	5/10/02	C-CHG MODEL TO PW-701
F.K.	4/29/02	B-CHG TABLE-TAPCONS
F.K.	3/1/02	A-ADD 2x, REDRAW BUCKS
Drawn By: F.K.	Date: 9/28/01	REF: FTL-3168

Approved as complying with the Florida Buiding Code
Date DEC. 13, 2002
NOA# 02-0123.03
Miami Dade Product Control Division
By

Robert L. Clark, P.E.
PE #39712
Structural
11/15/0

PGT INDUSTRIES

1070 TECHNOLOGY DRIVE
NOKOMIS, FL 34275

P.O. BOX 1529
NOKOMIS, FL 34274

Description: ELEVATION & GLAZING DETAIL

Title: ALUMINUM PICTURE WINDOW (SMALL MISSILE)

Series/Model:	Scale:	Sheet:	Drawing No.	Rev:
PW-701	NTS	1 of 4	4233	E

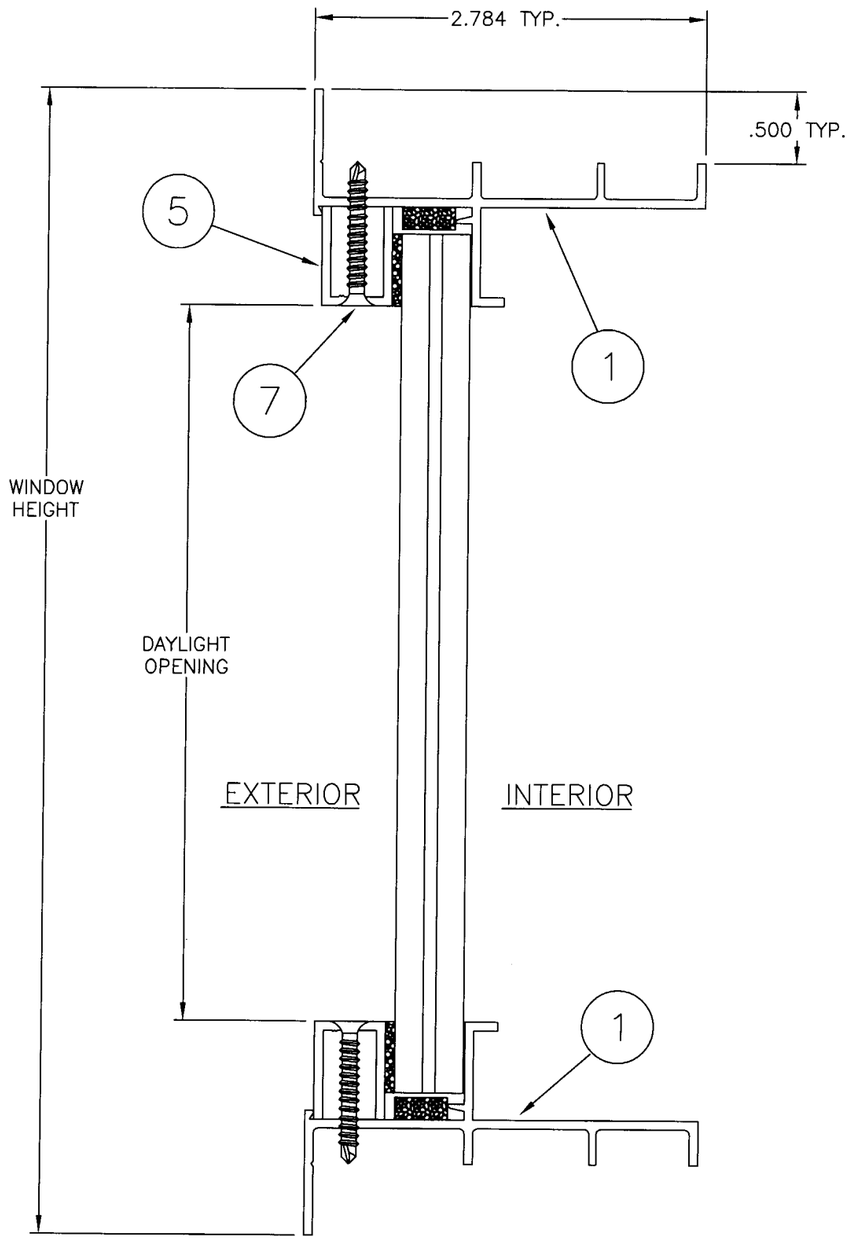

VERTICAL SECTION B–B

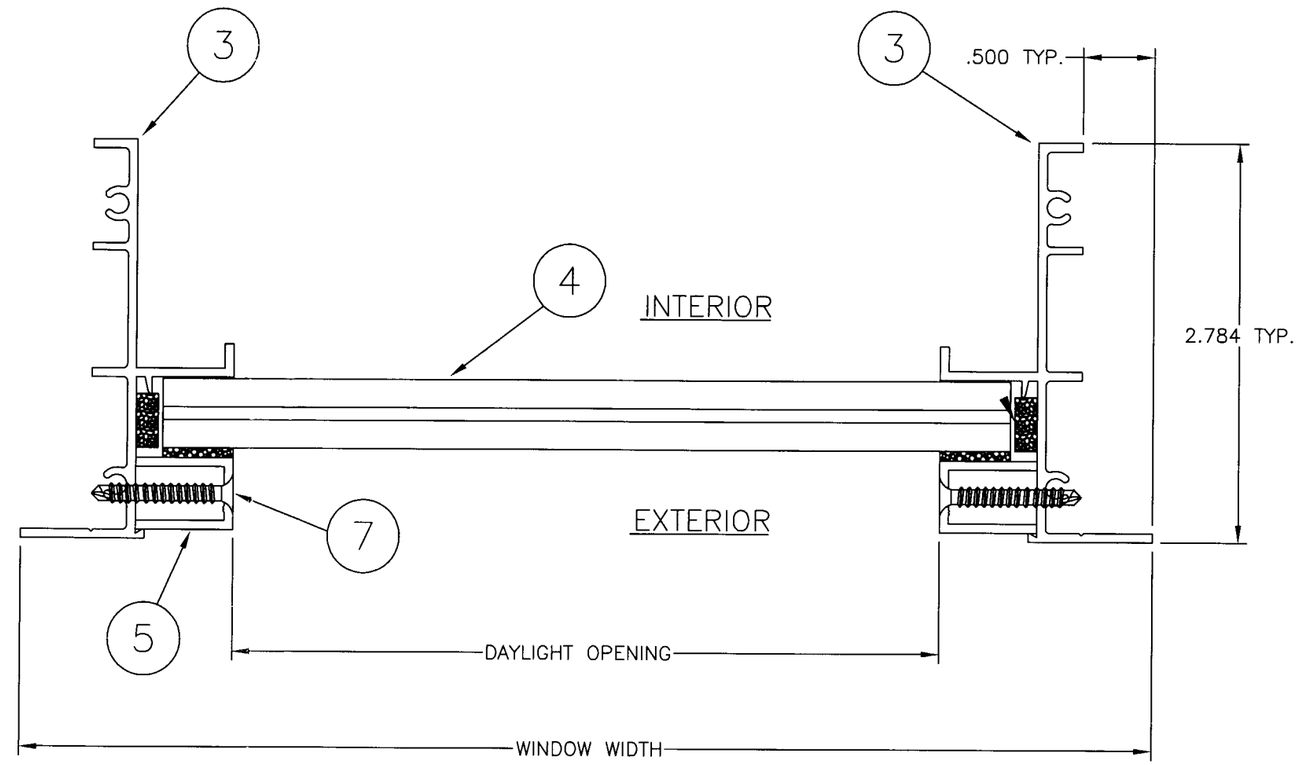

HORIZONTAL SECTION A–A

Revsd By:	Date:	Revisions:
F.K.	11/15/02	E–NO CHG THIS SHT
F.K.	6/20/02	D–NO CHG THIS SHT
F.K.	5/10/02	C–CHG MODEL TO PW–701
F.K.	4/29/02	B–NO CHG THIS SHT
F.K.	3/1/02	A–ADD 2x, REDRAW BUCKS
Drawn By: F.K.	Date: 9/28/01	REF: FTL–3168

Approved as complying with the Florida Buiding Code
Date DEC. 13, 2007
NOA# 02-0123.03
Miami Dade Product Control Division
By Mauricio Perez

Robert L. Clark
11/15/02

Robert L. Clark, P.E.
PE #39712
Structural

PGT INDUSTRIES

1070 TECHNOLOGY DRIVE
NOKOMIS, FL 34275

P.O. BOX 1529
NOKOMIS, FL 34274

Description: SECTIONS

Title: ALUMINUM PICTURE WINDOW (SMALL MISSILE)

Series/Model:	Scale:	Sheet:	Drawing No.	Rev:
PW–701	NTS	2 of 4	4233	E

ITEM	DWG	MAT'L	DESCRIPTION	PART NO
1	4202	6063-T5	FLANGE FRAME HEAD & SILL	612241
2	1155-1		#8 x 1" S.S. QUAD PN SMS	781PQX
3	4203	6063-T5	FLANGE FRAME JAMB	612242
4			GLASS, 7/16 LAMINATED (3/16T,.090,3/16T)	
5	505	6063-T5	GLAZING BEAD, .688 x .500 U-CHANNEL	6533402
6	1208		CLOSED CELL FOAM TAPE	61308K
7		400 ST.ST.	#8 x 1" F.H. S.S. TEK SCREW	78X1FPT410X
8	4232	EDPM	GLASS SPACER BLOCK W/ADHESIVE	712654K
9			SCHNEE-MOREHEAD JOINT SEALANT	6VPBDG
10			GLAZING SILICON, DOW #899	62899C6

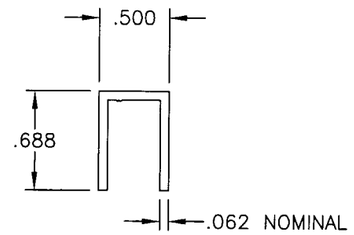

5 GLAZING BEAD U-CHANNEL
MAT'L: 6063-T5
DWG #505

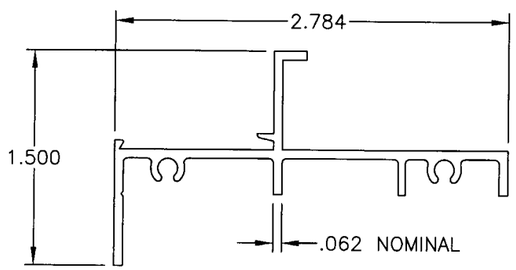

3 FRAME JAMB
MAT'L: 6063-T5
DWG #4203

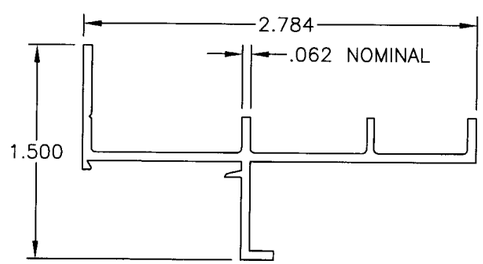

1 FRAME HEAD & SILL
MAT'L: 6063-T5
DWG #4202

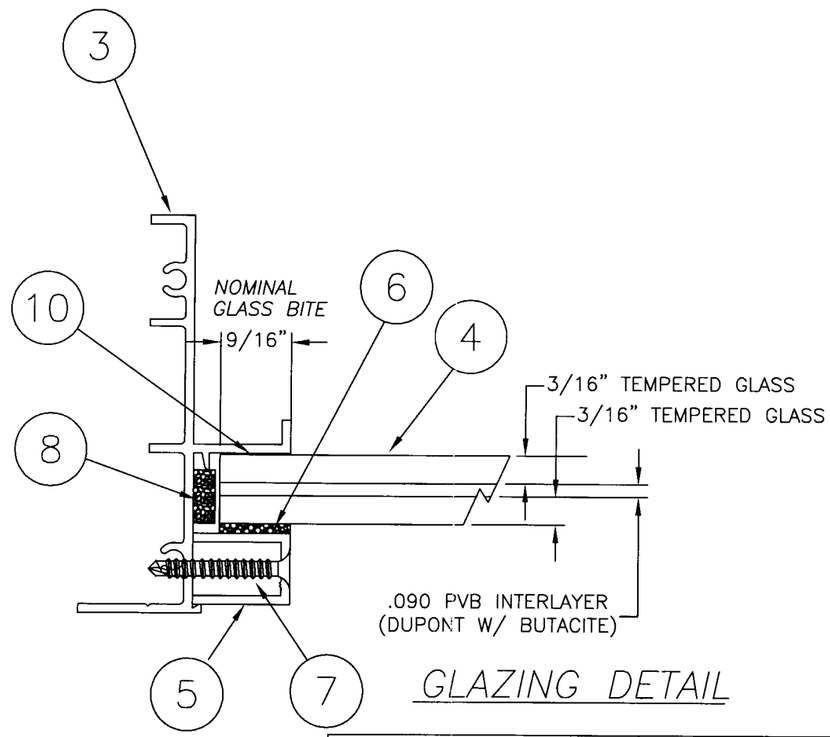

GLAZING DETAIL

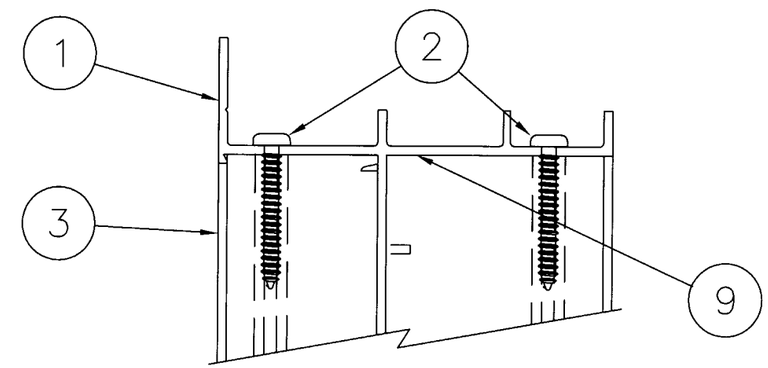

DETAIL C – TYP. CORNER ASSEMBLY

Revsd By:	Date:	Revisions:
F.K.	11/15/02	E-NO CHG THIS SHT
F.K.	6/20/02	D-GLAZING FROM SHT 1
F.K.	5/10/02	C-CHG MODEL TO PW-701
F.K.	4/29/02	B-NO CHG THIS SHT
F.K.	3/1/02	A-ADD 2x, REDRAW BUCKS
Drawn By: F.K.	9/28/01	REF: FTL-3168

Approved as complying with the Florida Buiding Code
Date DEC. 13, 2002
NOA# 02-0173.03
Miami Dade Product Control Division
By

Robert L. Clark, P.E.
PE #39712
Structural
11/15/02

PGT INDUSTRIES

1070 TECHNOLOGY DRIVE
NOKOMIS, FL 34275

P.O. BOX 1529
NOKOMIS, FL 34274

Description: EXTRUSION PROFILES & BILL OF MAT'L

Title: ALUMINUM PICTURE WINDOW (SMALL MISSILE)

Series/Model:	Scale:	Sheet:	Drawing No.	Rev:
PW-701	1x	3 of 4	4233	E

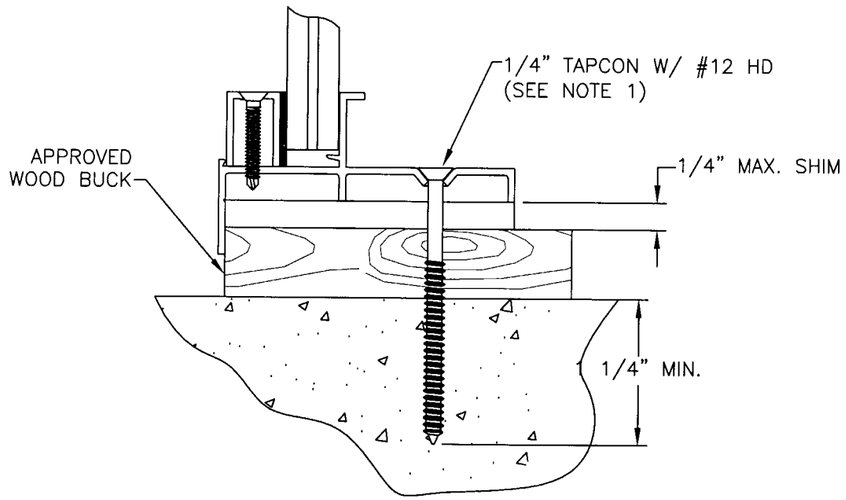

HEAD, SILL & JAMB SECTION

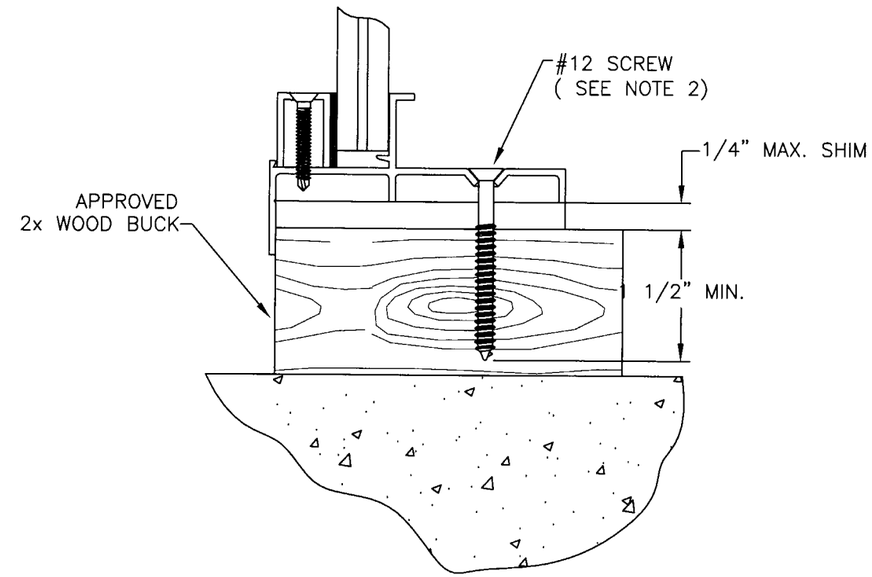

ALTERNATE SECTION
HEAD, SILL & JAMB

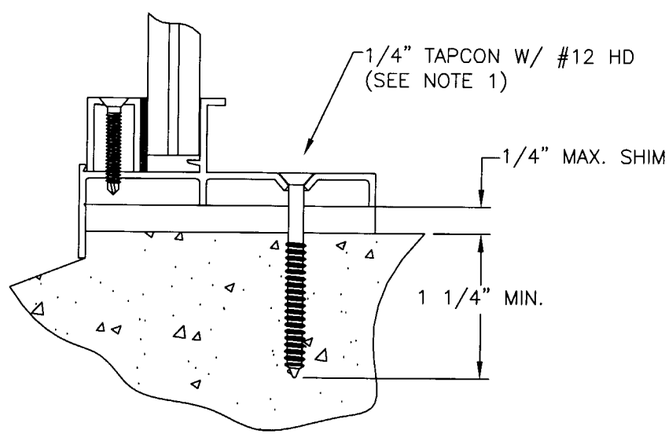

SILL SECTION

NOTES:

1. USE ONLY MIAMI-DADE COUNTY APPROVED ELCO OR ITW TAPCONS.
2. SEE SHEET 1 OF 4 FOR PRESSURE LIMITATION WHEN ANCHORING WITH #12 WOOD SCREWS.

11/15/02

Robert L. Clark, P.E.
PE #39712
Structural

PGT INDUSTRIES

1070 TECHNOLOGY DRIVE
NOKOMIS, FL 34275

P.O. BOX 1529
NOKOMIS, FL 34274

Revsd By:	Date:	Revisions:
F.K.	11/15/02	E-NO CHG THIS SHT
F.K.	6/20/02	D-NO CHG THIS SHT
F.K.	5/10/02	C-CHG MODEL TO PW-701
F.K.	4/29/02	B-CHG NOTE 1
F.K.	3/1/02	A-ADD 2x, REDRAW BUCKS
Drawn By: F.K.	9/28/01	REF: FTL-3168

Approved as complying with the Florida Buiding Code
Date DEC. 13, 2002
NOA# 02-0123.03
Miami Dade Product Control Division
By Manuel Sanz

Description: ANCHORAGE DETAIL

Title: ALUMINUM PICTURE WINDOW (SMALL MISSILE)

Series/Model:	Scale:	Sheet:	Drawing No.	Rev:
PW-701	NTS	4 of 4	4233	E