MIAMI-DADE

BUILDING CODE COMPLIANCE OFFICE (BCCO)
PRODUCT CONTROL DIVISION

MIAMI-DADE COUNTY, FLORIDA
METRO-DADE FLAGLER BUILDING
140 WEST FLAGLER STREET, SUITE 1603
MIAMI, FLORIDA 33130-1563
(305) 375-2901 FAX (305) 375-2908

NOTICE OF ACCEPTANCE (NOA)

PGT Industries, Inc.
1070 Technology Drive
Nokomis, FL 34275

SCOPE:
This NOA is being issued under the applicable rules and regulations governing the use of construction materials. The documentation submitted has been reviewed by Miami-Dade County Product Control Division and accepted by the Board of Rules and Appeals (BORA) to be used in Miami Dade County and other areas where allowed by the Authority Having Jurisdiction (AHJ).

This NOA shall not be valid after the expiration date stated below. The Miami-Dade County Product Control Division (In Miami Dade County) and/or the AHJ (in areas other than Miami Dade County) reserve the right to have this product or material tested for quality assurance purposes. If this product or material fails to perform in the accepted manner, the manufacturer will incur the expense of such testing and the AHJ may immediately revoke, modify, or suspend the use of such product or material within their jurisdiction. BORA reserves the right to revoke this acceptance, if it is determined by Miami-Dade County Product Control Division that this product or material fails to meet the requirements of the applicable building code.

This product is approved as described herein, and has been designed to comply with the High Velocity Hurricane Zone of the Florida Building Code.

DESCRIPTION: Series "SGD-830" Aluminum Sliding Glass Door – Small Missile Impact Resistant

APPROVAL DOCUMENT: Drawing No. **4333**, sheets 1 through 5, dated 10/01/01, with revision B dated 04/30/02, titled "Mid-Rise Alum. Sliding Glass Door", prepared by manufacturer, signed and sealed by Robert L. Clark, P.E., bearing the Miami-Dade County Product Control Approval stamp with the Notice of Acceptance number and approval date by the Miami-Dade County Product Control Division.

MISSILE IMPACT RATING: Small Missile Impact Resistant

LABELING: Each unit shall bear a permanent label with the manufacturer's name or logo, city, state and following statement: "Miami-Dade County Product Control Approved", unless otherwise noted herein.

RENEWAL of this NOA shall be considered after a renewal application has been filed and there has been no change in the applicable building code negatively affecting the performance of this product.

TERMINATION of this NOA will occur after the expiration date or if there has been a revision or change in the materials, use, and/or manufacture of the product or process. Misuse of this NOA as an endorsement of any product, for sales, advertising or any other purposes shall automatically terminate this NOA. Failure to comply with any section of this NOA shall be cause for termination and removal of NOA.

ADVERTISEMENT: The NOA number preceded by the words Miami-Dade County, Florida, and followed by the expiration date may be displayed in advertising literature. If any portion of the NOA is displayed, then it shall be done in its entirety.

INSPECTION: A copy of this entire NOA shall be provided to the user by the manufacturer or its distributors and shall be available for inspection at the job site at the request of the Building Official.
This NOA consists of this page 1 as well as approval document mentioned above.
The submitted documentation was reviewed by **Manuel Perez, P.E.**

PRODUCT CONTROL ACCEPTED

PGT Industries, Inc.

NOTICE OF ACCEPTANCE: EVIDENCE SUBMITTED

(For File ONLY. Not part of NOA)

A. DRAWINGS

1. Manufacturer's die drawings and sections.
2. Drawing No. **4333**, sheets 1 through 5, dated 10/01/01, with revision B dated 04/30/02, titled "Mid-Rise Alum. Sliding Glass Door", prepared by manufacturer, signed and sealed by Robert L. Clark, P.E.

B. TESTS

1. Test reports on 1) Air Infiltration Test, per SFBC, PA 202-94
   2) Uniform Static Air Pressure Test, Loading per SFBC PA 202-94
   3) Water Resistance Test, per SFBC, PA 202-94
   4) Small Missile Impact Test per SFBC, PA 201-94
   5) Cyclic Wind Pressure Loading per SFBC, PA 203-94
   6) Forced Entry Test, per SFBC 3603.2 (b) and PA 202-94

   along with marked-up drawings and installation diagram of an aluminum sliding glass door, prepared by Fenestration Testing Laboratory, Inc., Test Report No. **FTL-3167**, dated Aug. 1, 2001, signed and sealed by Luis A. Figueredo, P.E..

C. CALCULATIONS

1. Anchor Calculations and structural analysis, prepared by Al-Farooq Corporation, dated 10/15/01, signed and sealed by Robert L. Clark, P.E.

D. MATERIAL CERTIFICATIONS

1. None.

E. STATEMENTS

1. Statement letter of conformance, dated January 14, 2002, signed and sealed by Robert L. Clark, P.E.
2. Statement letter of no financial interest, dated January 14, 2002, signed and sealed by Robert L. Clark, P.E.
3. Laboratory compliance letter for Test Report no. FTL- 3167, issued by Fenestration Testing Laboratory, Inc., dated July 24, 2001, signed and sealed by Luis Figueredo, P.E.

F. OTHER

1. None.

Manuel Perez

Manuel Perez, P.E.
Product Control Examiner
NOA No 02-0123.05
Expiration Date: July 3, 2007
Approval Date: July 3, 2002

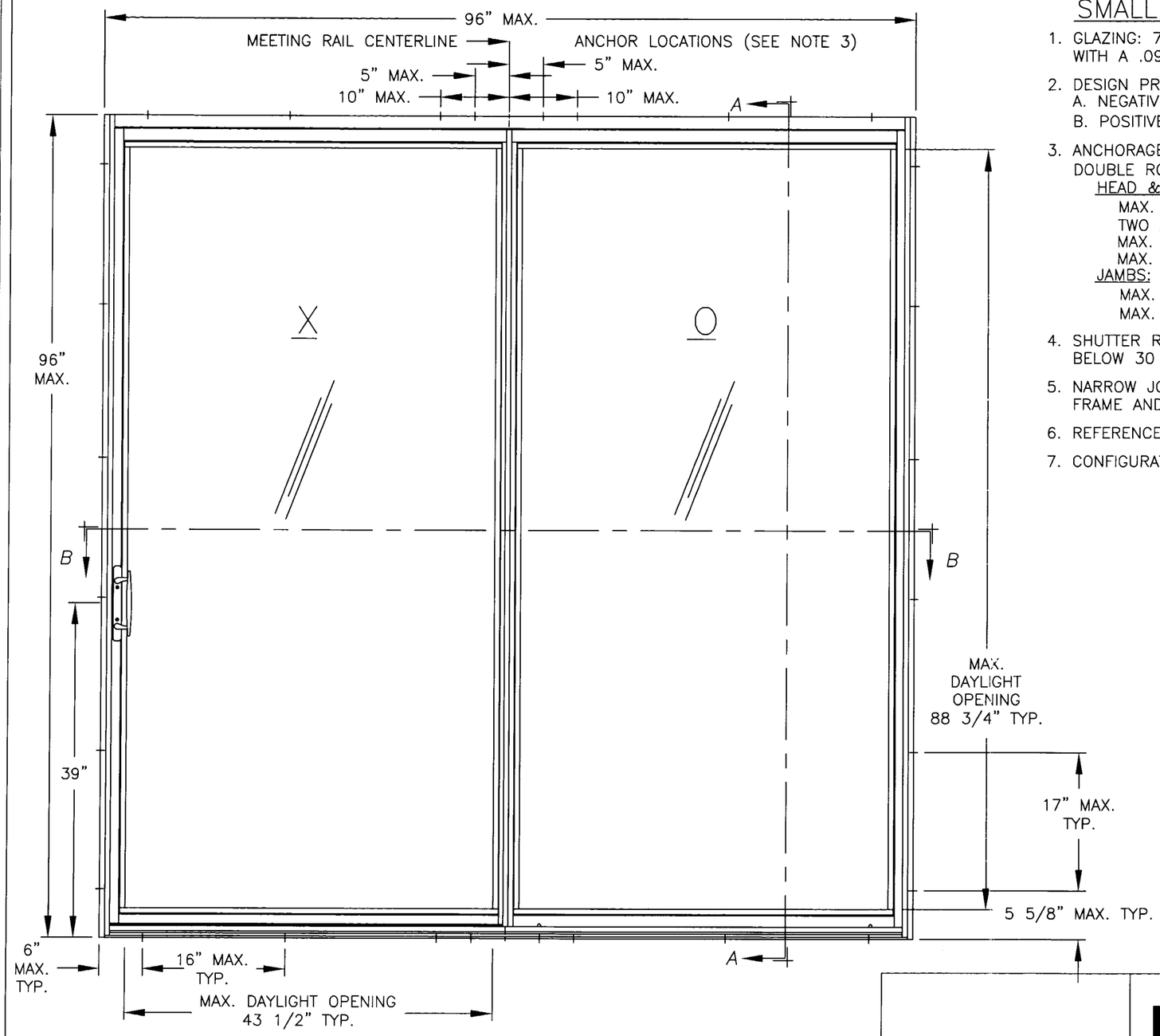

ELEVATION – OUTSIDE

SEE SHEET 2 OF 5 FOR SECTION DETAILS

DESIGN PRESSURE RATING	
NEGATIVE	POSITIVE
−140.0 P.S.F.	80.0 P.S.F.

SMALL MISSILE IMPACT SLIDING GLASS DOOR

1. GLAZING: 7/16" LAMINATED GLASS CONSISTING OF (2) LITES OF 3/16" TEMPERED GLASS WITH A .090 PVB INTERLAYER.
2. DESIGN PRESSURE RATING: SEE TABLE
   A. NEGATIVE DESIGN LOADS BASED ON TESTED PRESSURE AND GLASS TABLES ASTM E 1300-98.
   B. POSITIVE DESIGN LOADS BASED ON WATER TEST PRESSURE AND GLASS TABLES ASTM E 1300-98.
3. ANCHORAGE:
   DOUBLE ROW OF FASTENERS LOCATED AS FOLLOWS AND PER SHEET 6 OF 6.
   HEAD & SILL:
   MAX. 6" FROM CORNERS.
   TWO ANCHORS AT THE MEETING RAIL CENTERLINE.
   MAX. 5" & 10" ON EACH SIDE OF MEETING RAIL CENTERLINE.
   MAX. 16" SPACING.
   JAMBS:
   MAX. 5 5/8" FROM CORNERS.
   MAX. 17" SPACING.
4. SHUTTER REQUIREMENT: MIAMI-DADE COUNTY APPROVED SHUTTERS ARE ONLY REQUIRED AT INSTALLATIONS BELOW 30 FEET. (NONE REQUIRED AT INSTALLATIONS ABOVE 30 FT GRADE)
5. NARROW JOINT SEALANT IS USED ON ALL 4 CORNERS OF THE FRAME AND ON OUTSIDE OF FRAME WHERE ITEM 12, KEEPER PENETRATES.
6. REFERENCE TEST REPORT: FTL-3167
7. CONFIGURATIONS: XO & OX

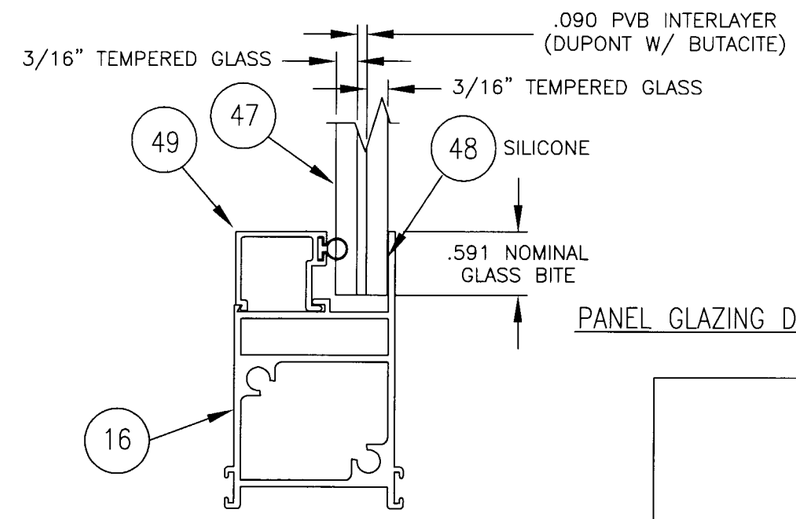

PANEL GLAZING DETAIL

Approved as complying with the Florida Building Code
Date July 3, 2002
NOA# 02-0123.05
Miami Dade Product Control Division
By Manuel Perez

Robert L. Clark, P.E.
PE #39712
Structural
4/2/02

PGT INDUSTRIES

1070 TECHNOLOGY DRIVE
NOKOMIS, FL 34275

P.O. BOX 1529
NOKOMIS, FL 34274

Revsd By:	Date:	Revisions:
F.K.	4/30/02	NO CHG THIS SHT
F.K.	3/4/02	ADD 2x DESIGNAT.
Drawn By: F.K.	Date: 10/1/01	REF: FTL-3167

Description: ELEVATION & GLAZING DETAIL (SM MISSILE)

Title: MID-RISE ALUM. SLIDING GLASS DOOR

Series/Model:	Scale:	Sheet:	Drawing No.	Rev:
SGD-830	NTS	1 of 5	4333	B

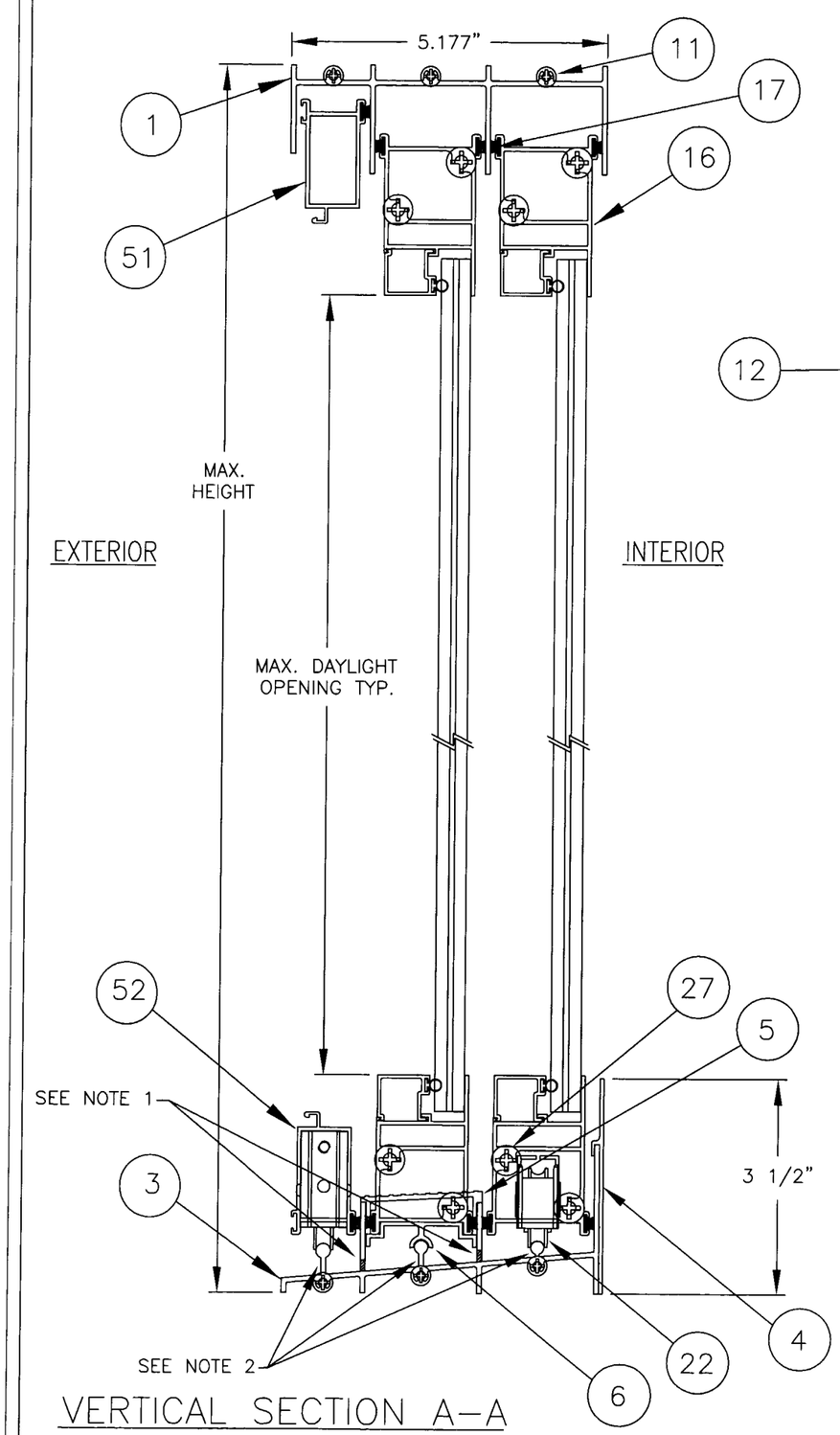

VERTICAL SECTION A–A

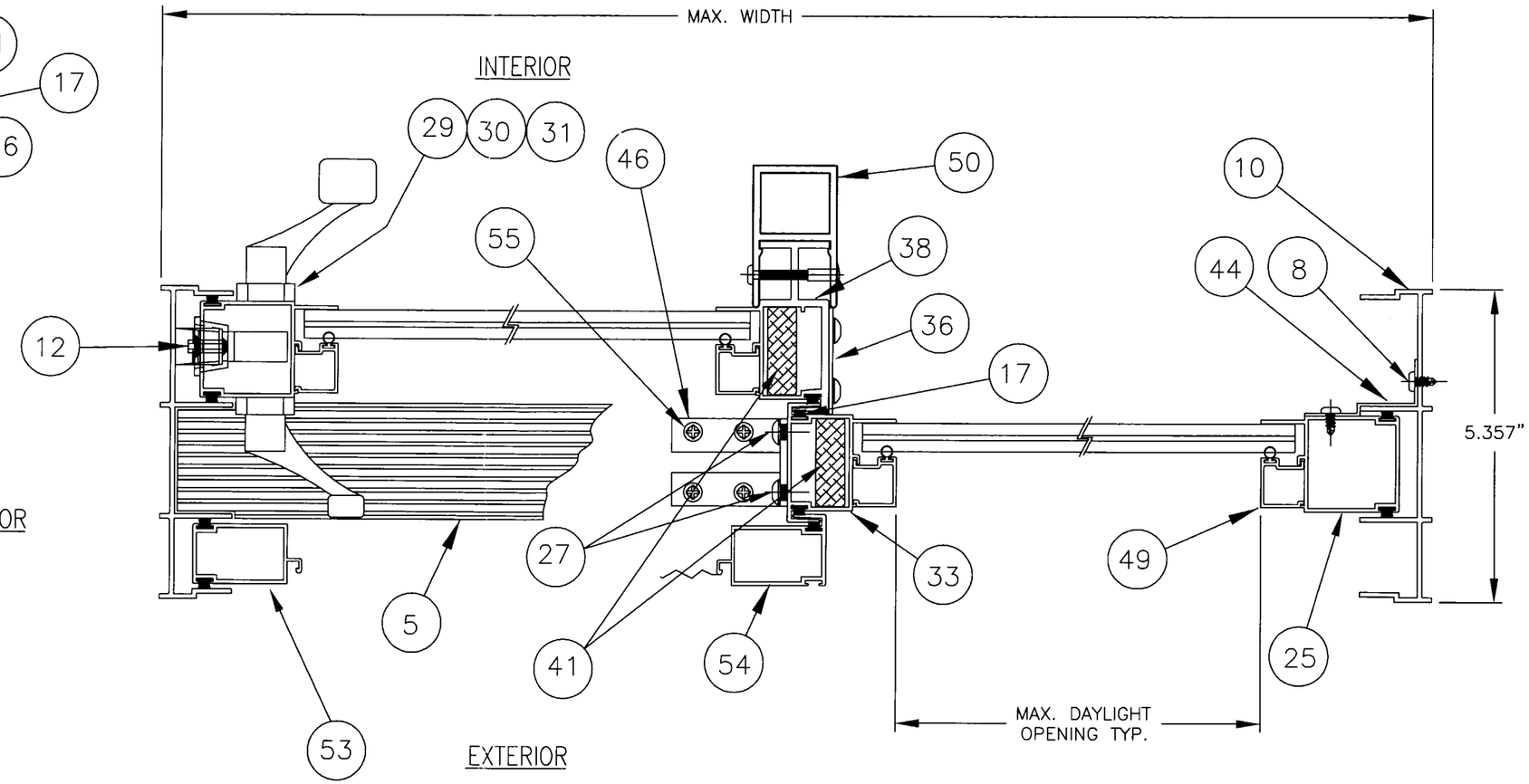

HORIZONTAL SECTION B–B

NOTES:

1. (1) 3/16" x 1" WEEP HOLE AT EACH END OF THE INTERMEDIATE AND OUTBOARD SILL FLANGE (4 TOTAL).
2. (1) 1 7/8" NOTCH AT EACH END OF EACH PANEL AND SCREEN TRACK (6 TOTAL).

Approved as complying with the Florida Building Code
Date July 3, 2002
NOA# 02-0123.05
Miami Dade Product Control Division
By Manuel Perez

Robert L. Clark, P.E.
PE #39712
Structural

4/2/02

PGT INDUSTRIES

1070 TECHNOLOGY DRIVE
NOKOMIS, FL 34275

P.O. BOX 1529
NOKOMIS, FL 34274

Revsd By:	Date:	Revisions:
F.K.	4/30/02	NO CHG THIS SHT
F.K.	3/4/02	ADD 2x DESIGNAT.
Drawn By: F.K.	Date: 10/1/01	REF: FTL-3167

Description: SECTIONS

Title: MID–RISE ALUM. SLIDING GLASS DOOR

Series/Model:	Scale:	Sheet:	Drawing No.	Rev:
SGD–830	NTS	2 of 5	4333	B

ITEM	DWG#	MAT'L	PGT#	DESCRIPTION
1	4302	6063-T5	612245	Frame Head, 2-Track
3	4303	6063-T5	64303	Frame Sill, 2-Track
4	4361	6063-T5	64361	3.500 Sill Add On
5	4315	6063-T5	64315	Threshold
6	4314	6063-T5	612254	Adapter, Fixed Panel
7		PLASTIC	71164	H.D 4 Hole Bumper Stop
8		S. STL	78X12	#8 x .500 S. STL. Tek Screw
10	4304	6063-T5	612247	Frame Jamb, 2-Track
11	1155-1	S. STL	781PQX	#8 x 1" S. Stl. Quad Pn. SMS
		(used at frame corners)		
12	4372	DIE-CAST	72507MLK	Mortise Lock Keeper
13	729	RUBBER	72087K	Bumper
14	1144	ZINC	78X38PPT	#8 x .375 Ph. Pn. TEK
16	4305A	6063-T5	64305	Panel, Top & Bottom Rail
17			W21205NG	Wstp .200 x .270 back, fin seal
22	1050	S. STL	71050X	Roller, Stainless Steel
23		S. STL	70834X	#8 x .75 Ph. Pn. SMS - S. Stl.
25	4306	6063-T5	612249	Panel, Side Rail (Fixed & Operable)
27		S. STL	720X112X	1/4-20 x 1.50 Ph. Pn. S. STL.
		(used at panel corners)		
29			7SGHWHW	Mortise Lock Handle Set
30			73009NFPX	Mortise Lock
31	4371-1		2260-03-63	Mortise Lock Recess Adapter
33	4308	6063HS-T54	64308	Fxd. Pnl. Meeting Rail
36	4355	PLASTIC	44355	Air Plug
		(used at top & bottom of fixed panel meeting stile)		
38	4326	6063HS-T54	64326	Oper. Pnl. Side Rail
41	4357B	6061-T65	64357M	Alum. Reinf. 1.50" x .50" x 90"
42	4370	POLYSTYRENE	44370	T-Handle Cover
43	4300-1			Screen B.O.M.
44	4328	6063-T5	612262	Fixed Panel Clip
		(3 used at fixed panel jamb stile)		
45		S. STL	78x38PPTX	#8 x 3/8 long Ph. P. Head Tek
46	4356	6063-T5	74356A	Fixed Panel Angle Bracket
		2 1/2"x2"x1/8"x1 1/2" lg (used at top & bottom)		
47		(3/16T,.090,3/16T)		Glass, 7/16 Laminated
48				Silicone Dow 899 or Equal
49	4324	6063-T5	6534601	Bead, Glazing .454 (7/16" Lami)
50	4353	6063HS-T54	64353	Add-on Reinforcement
51	4317	6063-T5	612256	Screen Frame Top Rail
52	4318	6063-T5	612257	Screen Frame Bottom Rail
53	4319	6063-T5	612258	Screen Frame Lockstile
54	4320	6063-T5	612259	Screen Frame Meeting Rail
55		S. STL	7S134X	#10 x 1 lg PH. FH. SMS (2)

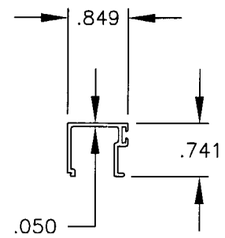

49 GLAZING BEAD, 7/16
MAT'L: 6063-T5
DWG# 4324

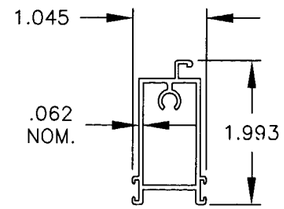

51 SCREEN FRAME TOP RAIL
MAT'L: 6063-T5
DWG# 4317

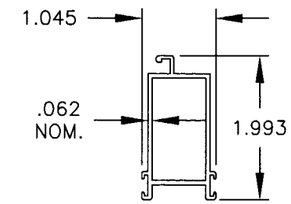

52 SCREEN FRAME BOTTOM RAIL
MAT'L: 6063-T5
DWG# 4318

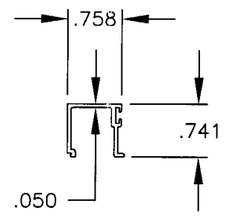

56 GLAZING BEAD - 9/16
MAT'L: 6063-T5
DWG# 4375

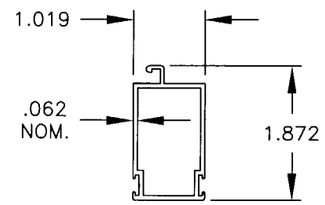

53 SCREEN FRAME LOCKSTILE
MAT'L: 6063-T5
DWG# 4319

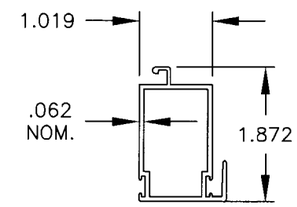

54 SCREEN FRAME MEETING RAIL
MAT'L: 6063-T5
DWG# 4320

R L Clark
4/2/02
Robert L. Clark, P.E.
PE #39712
Structural

PGT INDUSTRIES
1070 TECHNOLOGY DRIVE
NOKOMIS, FL 34275
P.O. BOX 1529
NOKOMIS, FL 34274

Revsd By:	Date:	Revisions:
F.K.	4/30/02	NO CHG THIS SHT
F.K.	3/4/02	ADD 2x DESIGNAT.
Drawn By: F.K.	Date: 10/1/01	REF: FTL-3167

Approved as complying with the Florida Buiding Code
Date July 3, 2002
NOA# 02-0123.05
Miami Dade Product Control Division
By Manuel Perez

Description: B.O.M. & EXTRUSION PROFILES

Title: MID-RISE ALUM. SLIDING GLASS DOOR

Series/Model:	Scale:	Sheet:	Drawing No.	Rev:
SGD-830	NTS	3 of 5	4333	B

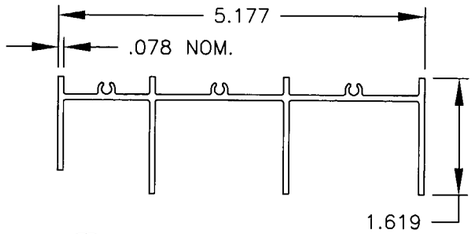

1 FRAME HEAD
MAT'L: 6063-T5
DWG# 4302

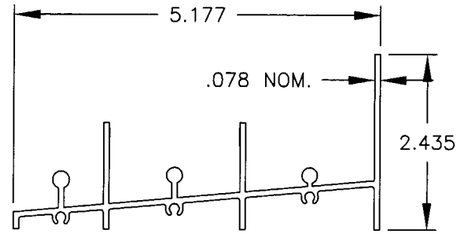

3 FRAME SILL
MAT'L: 6063-T5
DWG# 4303

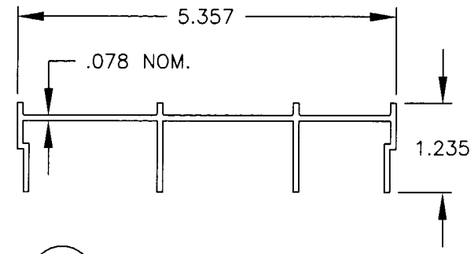

10 FRAME JAMB
MAT'L: 6063-T5
DWG# 4304

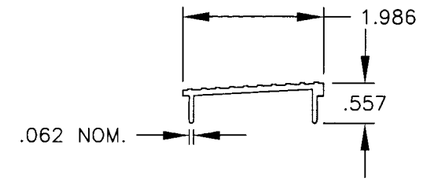

5 THRESHOLD COVER
MAT'L: 6063-T5
DWG# 4315

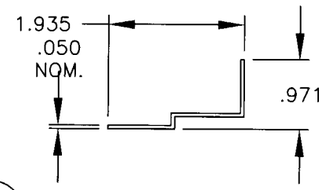

44 FIXED PANEL CLIP
MAT'L: 6063-T5
DWG# 4328

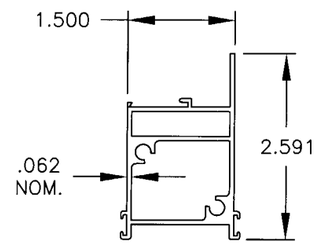

16 TOP & BOTT. RAIL
MAT'L: 6063-T5
DWG# 4305A

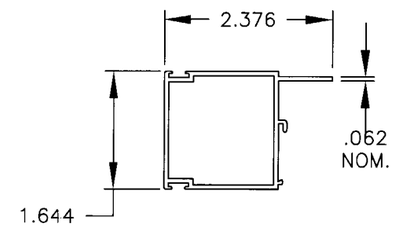

25 LOCKSTILE
MAT'L: 6063-T5
DWG# 4306

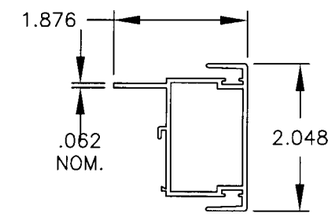

33 FIXED PANEL
MEETING RAIL
MAT'L: 6063HS-T54
DWG# 4308

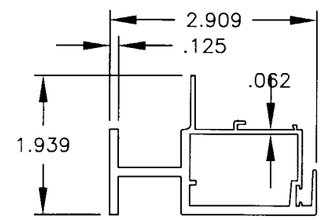

38 MOVING PANEL
MEETING RAIL
MAT'L: 6063HS-T54
DWG# 4326

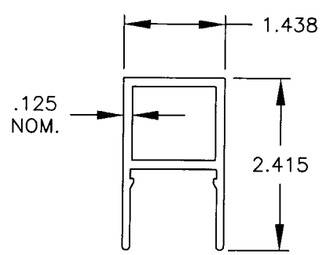

50 ADD ON REINF.
MAT'L: 6063HS-T54
DWG# 4353

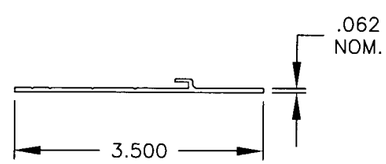

4 ADD ON SILL
MAT'L: 6063-T5
DWG# 4361

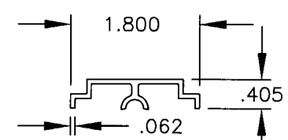

6 ADAPTER, FIXED PANEL
MAT'L: 6063-T5
DWG# 4314

4/2/02

Robert L. Clark, P.E.
PE #39712
Structural

PGT INDUSTRIES

1070 TECHNOLOGY DRIVE
NOKOMIS, FL 34275

P.O. BOX 1529
NOKOMIS, FL 34274

Revsd By:	Date:	Revisions:
F.K.	4/30/02	NO CHG THIS SHT
F.K.	3/4/02	ADD 2x DESIGNAT.
F.K.	10/1/01	REF: FTL-3167

Approved as complying with the Florida Building Code
Date July 3, 2002
NOA# 07-0123.05
Miami Dade Product Control Division
By

Description: EXTRUSION PROFILES CONT.

Title: MID-RISE ALUM. SLIDING GLASS DOOR

Series/Model:	Scale:	Sheet:	Drawing No.	Rev:
SGD-830	NTS	4 of 5	4333	B

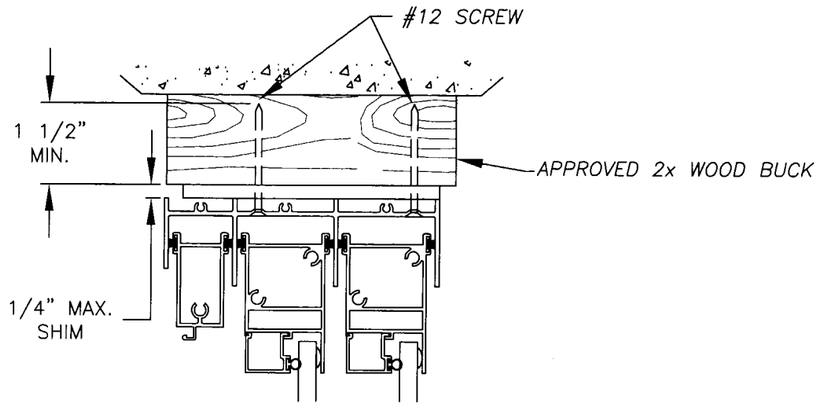

TYP. HEAD

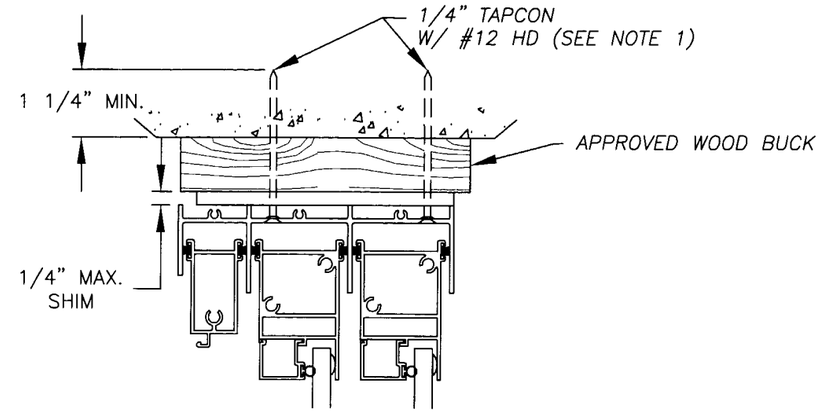

TYP. HEAD

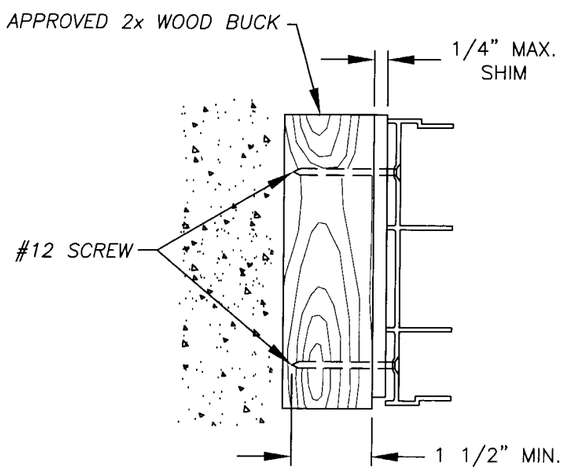

TYP. JAMB

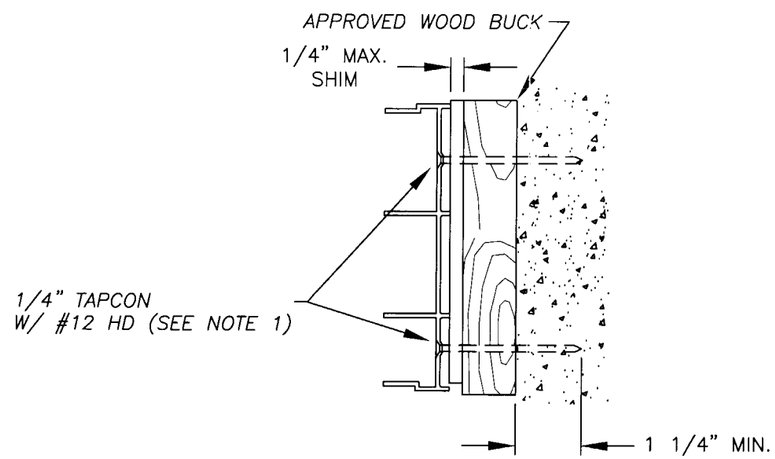

TYP. JAMB

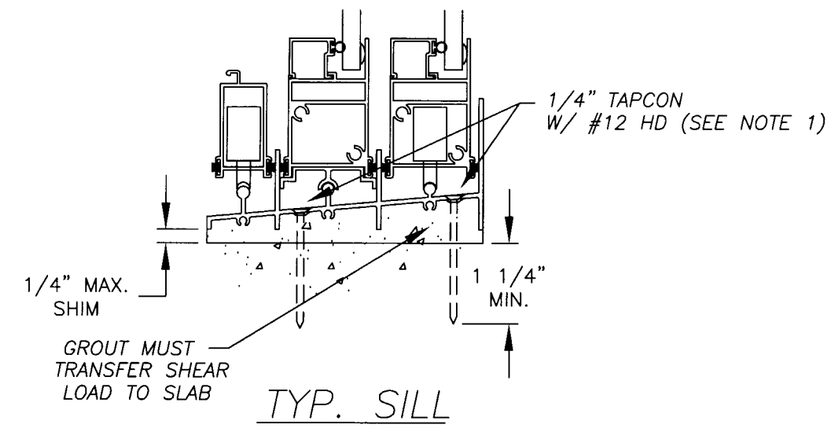

TYP. SILL

NOTE:

1. USE ONLY MIAMI-DADE COUNTY APPROVED ELCO OR ITW TAPCONS.

R L Clark
4/2/02

Robert L. Clark, P.E.
PE #39712
Structural

PGT INDUSTRIES

1070 TECHNOLOGY DRIVE
NOKOMIS, FL 34275

P.O. BOX 1529
NOKOMIS, FL 34274

Revsd By:	Date:	Revisions:
F.K.	4/30/02	CHG NOTE 1.
F.K.	3/4/02	ADD 2x DESIGNAT.
Drawn By: F.K.	Date: 10/1/01	REF: FTL-3167

Approved as complying with the Florida Building Code
Date July 3, 2002
NOA# 02-0123.05
Miami Dade Product Control Division
By Manuel Perez

Description: ANCHORAGE DETAILS

Title: MID-RISE ALUM. SLIDING GLASS DOOR

Series/Model:	Scale:	Sheet:	Drawing No.	Rev:
SGD-830	NTS	5 of 5	4333	B