MIAMI-DADE

BUILDING CODE COMPLIANCE OFFICE (BCCO)
PRODUCT CONTROL DIVISION

MIAMI-DADE COUNTY, FLORIDA
METRO-DADE FLAGLER BUILDING
140 WEST FLAGLER STREET, SUITE 1603
MIAMI, FLORIDA 33130-1563
(305) 375-2901 FAX (305) 375-2908

NOTICE OF ACCEPTANCE (NOA)

Dura-Loc Roofing Systems Limited
P.O box 220, R.R. #2
Courtland, Ontario, Canada NOJ 1EO

SCOPE:
This NOA is being issued under the applicable rules and regulations governing the use of construction materials. The documentation submitted has been reviewed by Miami-Dade County Product Control Division and accepted by the Board of Rules and Appeals (BORA) to be used in Miami Dade County and other areas where allowed by the Authority Having Jurisdiction (AHJ).

This NOA shall not be valid after the expiration date stated below. The Miami-Dade County Product Control Division (In Miami Dade County) and/or the AHJ (in areas other than Miami Dade County) reserve the right to have this product or material tested for quality assurance purposes. If this product or material fails to perform in the accepted manner, the manufacturer will incur the expense of such testing and the AHJ may immediately revoke, modify, or suspend the use of such product or material within their jurisdiction. BORA reserves the right to revoke this acceptance, if it is determined by Miami-Dade County Product Control Division that this product or material fails to meet the requirements of the applicable building code.

This product is approved as described herein, and has been designed to comply with the High Velocity Hurricane Zone of the Florida Building Code.

DESCRIPTION: Dura-Loc Continental Tile, Woodshake Tile and ShadowLine Tile

LABELING: Each unit shall bear a permanent label with the manufacturer's name or logo, city, state and following statement: "Miami-Dade County Product Control Approved", unless otherwise noted herein.

RENEWAL of this NOA shall be considered after a renewal application has been filed and there has been no change in the applicable building code negatively affecting the performance of this product.

TERMINATION of this NOA will occur after the expiration date or if there has been a revision or change in the materials, use, and/or manufacture of the product or process. Misuse of this NOA as an endorsement of any product, for sales, advertising or any other purposes shall automatically terminate this NOA. Failure to comply with any section of this NOA shall be cause for termination and removal of NOA.

ADVERTISEMENT: The NOA number preceded by the words Miami-Dade County, Florida, and followed by the expiration date may be displayed in advertising literature. If any portion of the NOA is displayed, then it shall be done in its entirety.

INSPECTION: A copy of this entire NOA shall be provided to the user by the manufacturer or its distributors and shall be available for inspection at the job site at the request of the Building Official.

This consists of pages 1 through 7.
The submitted documentation was reviewed by Frank Zuloaga, RRC.

ROOFING ASSEMBLY APPROVAL

Category: Roofing
Sub-Category: Panels
Type: Non-Structural
Sub-Type: Metal
Maximum Design Pessure: **-63 psf.**

TRADE NAMES OF PRODUCTS MANUFACTURED OR LABELED BY APPLICANT:

Product	Covered Dimensions	Test Specifications	Product Description
Dura-Loc Continental Tile, woodshake tile Shadowline Tile	Length: 47 ¼" Width: 15 $^{13}/_{16}$" Thickness 0.0217 galvanized	PA 110	SFQ AZ150 (AZ50) Grade 33 Acrylic Coated w/ color quartz stones
Trim pieces	Length: varies Width: varies	PA 110	SFQ AZ150 (AZ50) Grade 33 Acrylic Coated

TRADE NAMES OF PRODUCTS MANUFACTURED OTHERS:

Product	Dimensions	Test Specifications	Product Description	Manufacturer
Pop Rivets	#8	PA 114 Appendix E	Corrosion Resistant, standard steel pop rivets	Generic (With current NOA)
Tile Fixing Screws	1 ½" #10 ¼" Hex Head	PA 114 Appendix E	Corrosion resistant, metal screws approved by manufacturer..	Generic (With current NOA)
Fire Barrier Board ("Dens Deck")	min. ¼" thick	N/A	Fire barrier over-layment board for installation of metal panels. For Class 'A' fire rating.	Georgia-Pacific (with current NOA)
Sealant	N/A	N/A	Sealant for use at foam closure strip.	Dura-Loc (With current NOA)
Wood Battens	nominal 2" x 2"	N/A	Decay resistant lumber battens	Generic (With current NOA)

System: A:	Dura-Loc Continental Tile, Shadowline Tile and Shake Tile
Deck Type:	Wood, Non-insulated
Deck Description:	New Construction or $^{19}/_{32}$" or greater plywood or wood plank or Re-roof $^{15}/_{32}$" plywood.
Maximum Uplift Pressure:	The maximum allowable design pressure for the panel shall be **–63 psf.**
Deck Attachment:	In accordance with applicable building code, but in no case shall it be less using minimum #8 x 1¾" wood screws or annular ring shank nails at a spacing of 6" o.c. at supports. In re-roofing, where the deck is less than $^{19}/_{32}$" thick (Minimum $^{15}/_{32}$") The above attachment method must be in addition to existing attachment.
Underlayment:	Minimum underlayment shall be a double layer underlayment system comprised of a #15 felt (ASTM D 226, type 1) applied with a 50% overlap or application of a #30 felt (ASTM D 226, type II) or #43 coated base sheet (ASTM D 2626) installed with a minimum 6" side-laps and 2" headlaps. Underlayment shall be fastened with corrosion resistant tin-caps and 1¼" annular ring-shank nails, spaced 6" o.c. at all laps and two staggered rows 12" o.c. in the field of the roll.
Fire Barrier Board:	For class A or B fire rating, install minimum ¼" thick Georgia Pacific "Dens Deck" (with current NOA) or minimum 4 mm thick of Tritex, RockRoof (with current NOA) or $^{5}/_{8}$" water resistance type X gypsum sheathing with treated core and facer.
Valleys:	Valley construction shall be in compliance with Roofing Application Standard RAS 133 and with the current published installation instructions and details in Dura-Loc Roofing System Limited installation instructions.
Battens:	Install nominal 2" x 2" battens decay resistant lumber over underlayment at a maximum spacing of 15- $^{13}/_{16}$" using minimum of one #12-13 x 3½" pan screws spaced 24" o.c. and at ½" from each end.
Metal Panels and Accessories:	Install the "Dura-Loc Continental Tile, Woodshake Tile and Shadowline Tile" panels including flashing penetrations, valleys endlaps and accessories in compliance with "Dura-Loc Roofing Systems Limited current, published instalation instructions and in compliance with the minimum requirements detailed in Roofing Application Standard RAS 133. Fasteners shall be a minimum of #10 1-$^{1}/_{2}$" long hex head metal/wood fasteners to be installed in the front downturn, at the low profile in each panel as per manufacturer instructions. This leads to 6 fasteners per panel width and 4 fasteners in the field of the panel.

SYSTEM A-2:	Dura-Loc Continental Tile, WoodShake Tile and Shadowline Tile
Deck Type:	Wood, Non-insulated
Deck Description:	Recover over existing Asphalt Shingle Roof $^{15}/_{32}$" or greater plywood
Maximum Uplift Pressure:	The maximum allowable design pressure for the panel shall be **–63 psf.**
Deck Attachment:	For recover applications, existing deck attachments shall be confirmed to be in compliance with applicable building code.
Existing Shingles:	Existing shingles shall be minimum Class 'C' organic felt shingles or minimum Class 'A' fiberglass shingles to maintain a Class 'A' or 'B' fire rating, as noted below.
Underlayment:	Minimum underlayment shall be a double layer underlayment system comprised of a #15 felt (ASTM D 226, type 1) applied with a 50% overlap or application of a #30 felt (ASTM D 226, type II) or #43 coated base sheet (ASTM D 2626) installed with a minimum 6" side-laps and 2" headlaps. Underlayment shall be fastened with corrosion resistant tin-caps and 1¼" annular ring-shank nails, spaced 6" o.c. at all laps and two staggered rows 12" o.c. in the field of the roll.
Fire Barrier:	For class A or B fir rating, installed minimum ¼" thick Georgia Pacific "Dens Deck" (with current NOA) or minimum 4 mm thick of Tritex, RockRoof (with current NOA) or 5/8" water resistant type X gypsum sheathing with treated core and facer.
Battens:	(For a Class 'B' Fire Rating) Install minimum 2" x 2" wood battens of decay resistant lumber, running perpendicular to the roof slope, at a spacing of 15-$^{13}/_{16}$" using a minimum of one #12-13 x 3-½" pan screws spaced 24" o.c. and ½" from each end.
Valleys:	Valley construction shall be in compliance with Roofing Application Standard RAS 133 and with current published installation instructions and details in Dura-Loc Roofing System Limited current published installation instructions.
Metal Panels and Accessories:	Install the Dura-Loc Continental, WoodShake Tile and Shadowline Tile panels including flashing, penetrations, valleys, end laps and accessories in compliance with Dura-Loc Roofing Systems Limited current, published installation instructions and in compliance with the minimum requirements detailed in Roofing Application Standard RAS 133. Fastener shall be #10 1-½" long minimum hex head metal/wood fasteners to be installed in the front downturn, at the low profile in each panel as per manufacturers instructions. This leads to 6 fasteners per panel width and 4 fasteners in the field of the panel.

SYSTEM LIMITATIONS

1. Increased design pressure at perimeter and corner areas, in compliance with applicable building code may be met through rational analysis by increasing the number of attachment points in these areas. The maximum fasteners spacing noted in the "Systems Description" section of this approval shall not be exceeded. All rational analysis computation shall be prepared, signed and sealed by a Florida registered Proffesional Engineer, Registered Architect, or Registered Roof Consultant.

2. All panels shall be permanently labeled with the manufacturer's name and/or logo, and the following statement: "Miami-Dade County Product Control Approved.

3. Fire classification is not part of this acceptance; refer to a current Approved Roofing Materials Directory for fire rating of this product.

4. For minimum slope reuiqrements, refer to applicable building code.

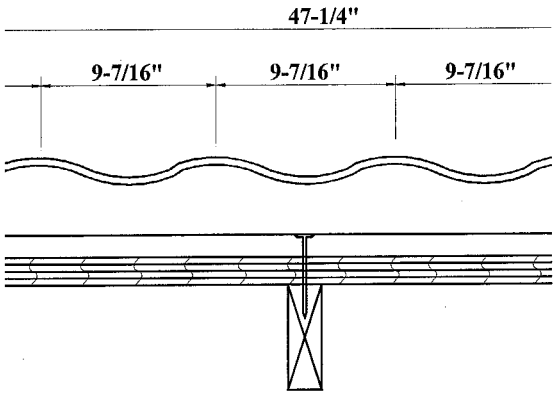

CONTINENTAL TILE

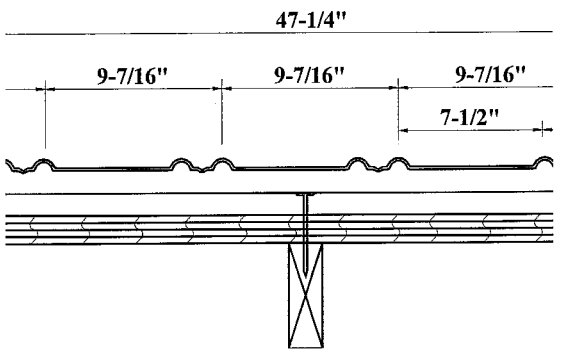

SHADOWLINE TILE

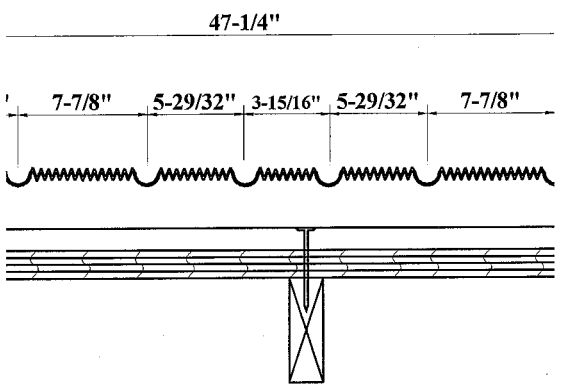

SHAKE TILE

CONTINENTAL

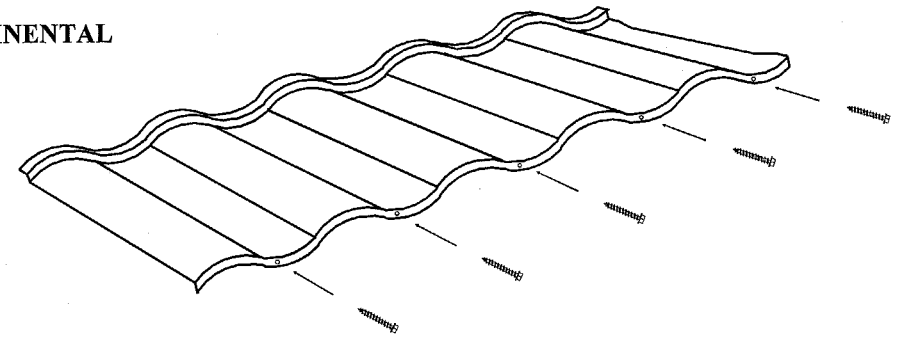

SHADOWLINE

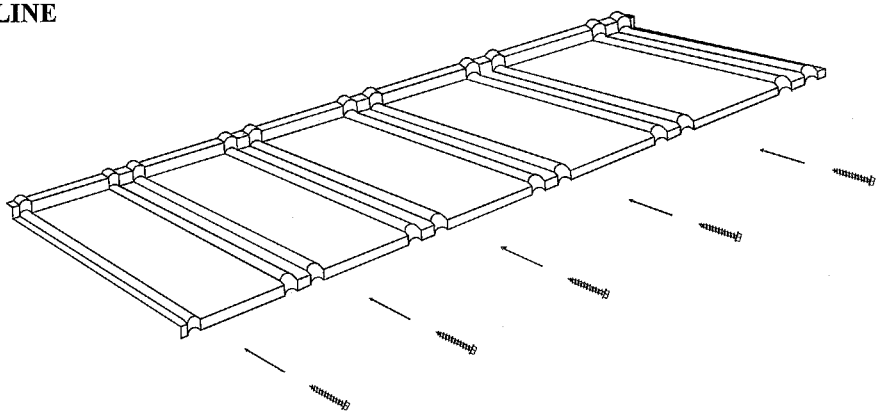

SHAKE

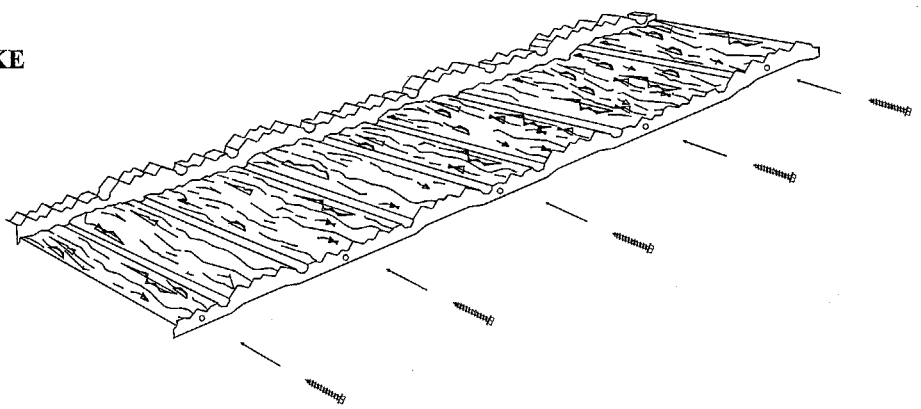

END OF THIS ACCEPTANCE