MIAMI-DADE

BUILDING CODE COMPLIANCE OFFICE (BCCO)
PRODUCT CONTROL DIVISION

MIAMI-DADE COUNTY, FLORIDA
METRO-DADE FLAGLER BUILDING
140 WEST FLAGLER STREET, SUITE 1603
MIAMI, FLORIDA 33130-1563
(305) 375-2901 FAX (305) 375-2908

NOTICE OF ACCEPTANCE (NOA)

Rotan Mahogany Millwork, Inc.
2525 SW 3rd Avenue
Miami, Fl 33129

SCOPE:
This NOA is being issued under the applicable rules and regulations governing the use of construction materials. The documentation submitted has been reviewed by Miami-Dade County Product Control Division and accepted by the Board of Rules and Appeals (BORA) to be used in Miami Dade County and other areas where allowed by the Authority Having Jurisdiction (AHJ).

This NOA shall not be valid after the expiration date stated below. The Miami-Dade County Product Control Division (In Miami Dade County) and/or the AHJ (in areas other than Miami Dade County) reserve the right to have this product or material tested for quality assurance purposes. If this product or material fails to perform in the accepted manner, the manufacturer will incur the expense of such testing and the AHJ may immediately revoke, modify, or suspend the use of such product or material within their jurisdiction. BORA reserves the right to revoke this acceptance, if it is determined by Miami-Dade County Product Control Division that this product or material fails to meet the requirements of the applicable building code.

This product is approved as described herein, and has been designed to comply with the High Velocity Hurricane Zone of the Florida Building Code.

DESCRIPTION: Roatan Mahogany Casement Window

APPROVAL DOCUMENT: Drawing No. 02-523r1, titled "Mahogany Casement Windows", sheets 1 through 7, prepared, signed and sealed by Pedro De Figueiredo, P.E., dated 6/28/02, bearing the Miami-Dade County Product Control Approval stamp with the Notice of Acceptance number and approval date by the Miami-Dade County Product Control Division.

MISSILE IMPACT RATING: Large and Small Missile Impact

LABELING: Each unit shall bear a permanent label with the manufacturer's name or logo, city, state and following statement: "Miami-Dade County Product Control Approved", unless otherwise noted herein.

RENEWAL of this NOA shall be considered after a renewal application has been filed and there has been no change in the applicable building code negatively affecting the performance of this product.

TERMINATION of this NOA will occur after the expiration date or if there has been a revision or change in the materials, use, and/or manufacture of the product or process. Misuse of this NOA as an endorsement of any product, for sales, advertising or any other purposes shall automatically terminate this NOA. Failure to comply with any section of this NOA shall be cause for termination and removal of NOA.

ADVERTISEMENT: The NOA number preceded by the words Miami-Dade County, Florida, and followed by the expiration date may be displayed in advertising literature. If any portion of the NOA is displayed, then it shall be done in its entirety.

INSPECTION: A copy of this entire NOA shall be provided to the user by the manufacturer or its distributors and shall be available for inspection at the job site at the request of the Building Official.
This NOA consists of this page 1 as well as approval document mentioned above.
The submitted documentation was reviewed by **Theodore Berman, P.E.**

PRODUCT CONTROL ACCEPTED

02-0510.03

TYPICAL SINGLE ELEVATIONS

DESIGNED PRESSURE RATING
Pd= ± 75 PSF

MAXIMUM FRAME SIZES
FINISHED WIDTH: FW= 39 1/2"
FINISHED HEIGHT: FH= 123"

MAXIMUM CLADDING SIZES
1/2" GLASLAM SAFETY-PLUS IMPACT GLASS
DLO: 25 3/4" X 103 1/2"
1 1/2" MAHOGANY SOLID WOOD PANEL
DLO: 25 3/4" X 103 1/2"

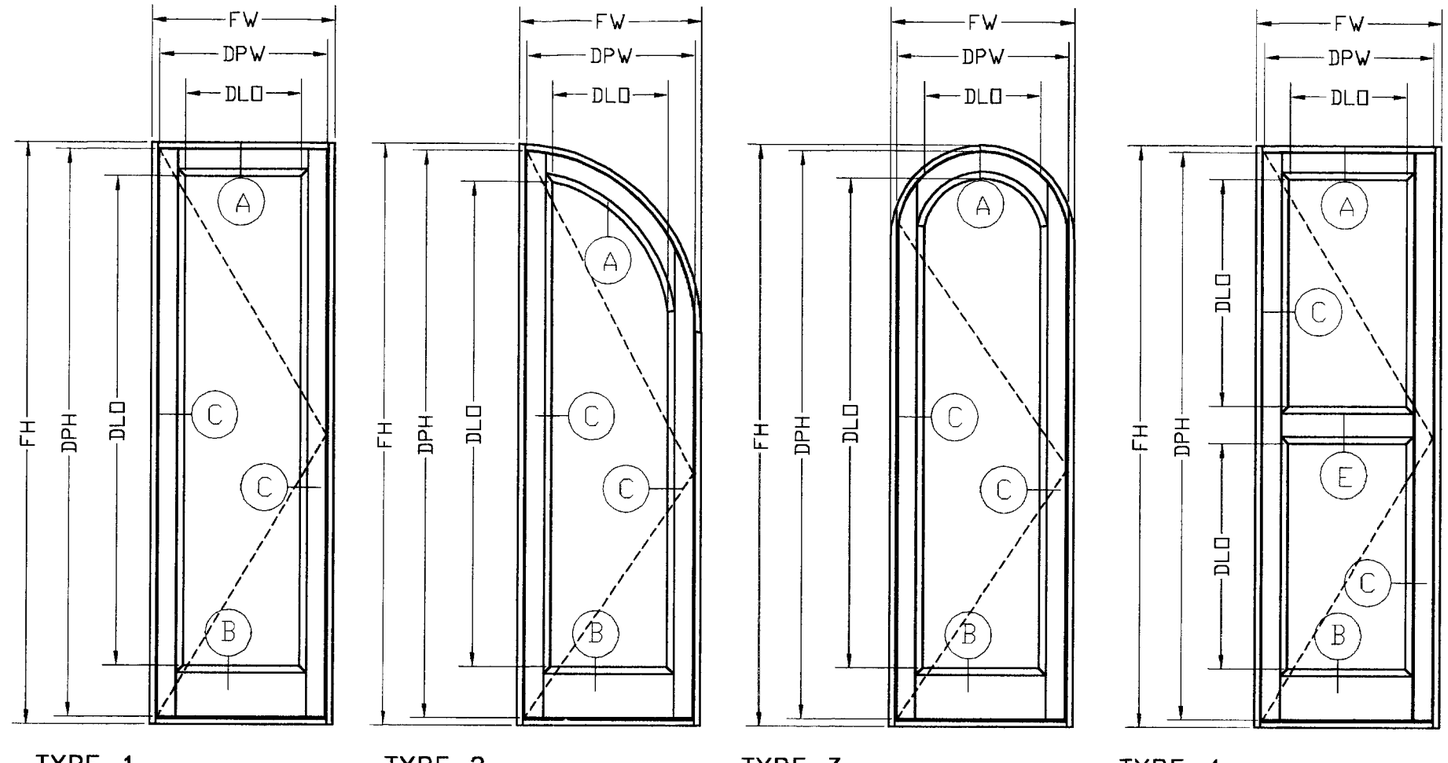

TYPE 1
SQUARE CONFIGURATION

TYPE 2
1/2 ARCH CONFIGURATION

TYPE 3
FULL ARCH CONFIGURATION

TYPE 4
LITE WITH SPLIT PANEL CONFIGURATION

GENERAL NOTES:

1- DEFINITION: THIS PRODUCT IS A CASEMENT MAHOGANY WINDOW; DESIGNED, CONSTRUCTED AND ERECTED TO ENCLOSE AN AREA, PROVIDING PROTECTION FROM HURRICANE FORCE WINDS WITHIN THE ALLOWABLE DESIGNED PRESSURES AND LIMITATIONS STATED IN THIS APPROVAL.

2- CODE: THIS PRODUCT HAS BEEN TESTED AND DESIGNED IN ACCORDANCE WITH THE 2001 FLORIDA BUILDING CODE, HIGH VELOCITY ZONES.

3- POSTING: A PERMANENT LEGIBLE DECAL SHALL BE PLACED AT A READILY VISIBLE LOCATION STATING THE FOLLOWING:

"ROATAN MAHOGANY MILLWORK INC - MIAMI - FLORIDA
LARGE MISSILE IMPACT RESISTANT
ROATAN CASEMENT WINDOW
DADE COUNTY APPROVED"

4- LOADS: DESIGNED LOAD BASED ON THE ASCE 7-98. LOADS TO BE PROVIDED BY A PROFESSIONAL ARCHITECT OR ENGINEER FOR EACH SPECIFIC PROJECT. THE CALCULATED DESIGNED PRESSURE MUST NOT EXCEED THE ALLOWABLE DESIGNED PRESSURE RATING.

5- MATERIAL: ALL WOOD MATERIAL TO BE FABRICATED FROM KILN DRIED MAHOGANY.

6- FASTENERS: ASSEMBLY SCREWS AND ANCHORS SHALL BE AS SPECIFIED IN THE CURRENT SET OF DRAWINGS. INSTALLATION AND LOADS AS PER THIS APPROVAL.

7- USE: IT SHALL BE THE RESPONSIBILITY OF THE CONTRACTOR, ARCHITECT OR ENGINEER OF RECORD TO VERIFY THE FOLLOWING:
7.1- THE STABILITY OF THE STRUCTURE WHERE THE SHUTTER IS TO BE ATTACHED INSURING PROPER ANCHORAGE.
7.2- THE SITE SPECIFIC PROJECT CRITERIA, SUCH AS BUT NOT LIMITED TO, WIND LOADS, LOCAL CODE REQUIREMENTS, DESIGNED PRESSURES ETC.
7.3- THAT THIS APPROVAL IS ADEQUATE TO THE SPECIFIC PROJECT.

8- DISCLAIMER: ENGCO INC. HAS NO CONTROL IN THE MANUFACTURING AND/OR PERFORMANCE OF THIS PRODUCT. THESE GENERIC PLANS WERE ENGINEERED IN ACCORDANCE WITH ACCEPTED ENGINEERING PRACTICES AND TEST DATA PROVIDED BY THE MANUFACTURER.

BILL OF MATERIALS

ITEM#	DESCRIPTION	SIZE	REMARKS
D1	BOTTOM RAIL	2.25" X 10"	MAHOGANY WOOD
D2	TOP RAIL & STILES	2.25" X 4.75"	MAHOGANY WOOD
D3	EXTERIOR MOULDING	1.50" X 1.25"	MAHOGANY WOOD
D4	INTERIOR MOULDING	1.50" X 1.375"	MAHOGANY WOOD
D5	MID RAIL	2.25" X 6.25"	MAHOGANY WOOD
GL1	IMPACT GLASS	1/2" ANNEAL	NOA #00-0524.06
GL2	SOLID PANEL	1.75" THICK	MAHOGANY WOOD
F1	JAMB AND HEADER	1.75" X6.50"	MAHOGANY WOOD
F2	SILL	1.875" X6.50"	MAHOGANY WOOD
G1	BOTTOM RAIL GASKET	2.25" X0.5"	PEMKO V80DS VINYL
G2	FRAME SEAL	0.65" X0.58"	SCHEGEL QDS 650

Approved as complying with the Florida Building Code
Date August 8, 2002
NOA# 02-0510.03
Miami Dade Product Control Division
By [signature]

MANUFACTURER:
Roatan Mahogany Millwork Inc
2525 SW 3rd Ave.
Suite 210
MIAMI FLORIDA 33129
Tel.: (305) 858-0053

PRODUCT:
MAHOGANY CASEMENT WINDOW

Engineering:
EngCo Inc.
CA 8116
6971 W. Sunrise Blvd. 104
Plantation, Fl. 33313
Tel.: (954) 585-0304

JUN 28 2002

Engineer Seal
Pedro De Figueiredo
PE 52609

Date: 06/24/02
Scale: NA
Design by: PPMF

Revision:

Drawing Number
02-523r1

Sheet
1 of 7

DESIGNED PRESSURE RATING
Pd= ± 75 PSF

MAXIMUM FRAME SIZES
FINISHED WIDTH: FW= 75 1/2"
FINISHED HEIGHT: FH= 123"

MAXIMUM CLADDING SIZES
1/2" GLASLAM SAFETY-PLUS IMPACT GLASS
DLO: 25" X 103 3/4"
1 1/2" MAHOGANY SOLID WOOD PANEL
DLO: 25" X 103 3/4"

TYPICAL PAIR ELEVATIONS

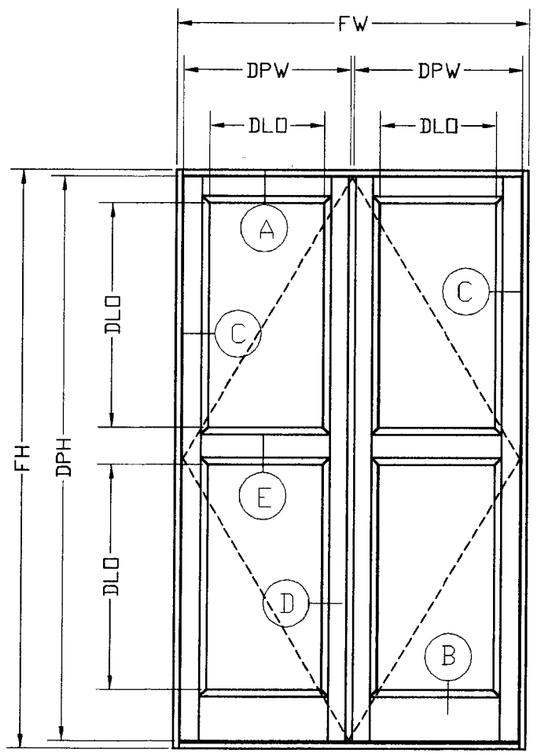

TYPE 5
SPLIT PANEL CONFIGURATION

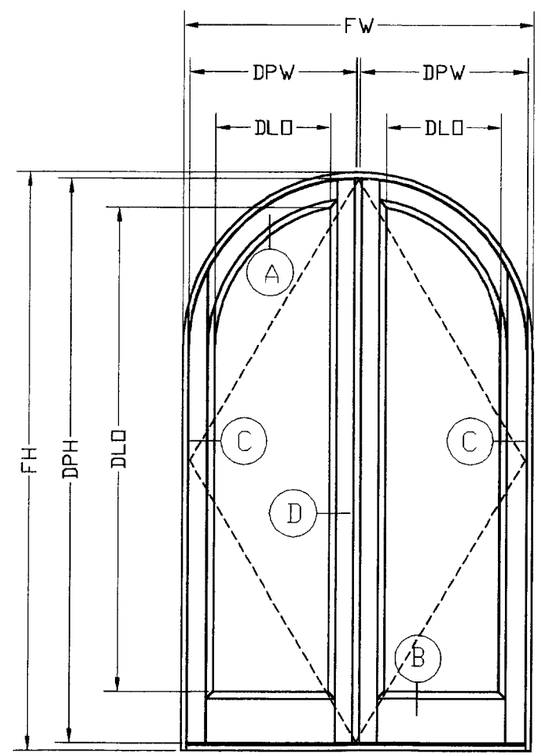

TYPE 6
ARCH CONFIGURATION

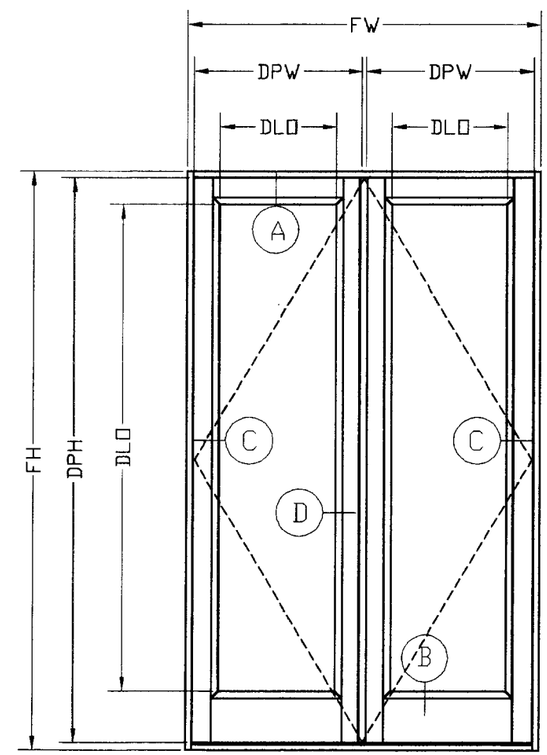

TYPE 7
SQUARE CONFIGURATION

Approved as complying with the
Florida Building Code
Date August 8, 2002
NOA# 02-0510.03
Miami Dade Product Control
Division
By Alexander Roman

MANUFACTURER:
Roatan Mahogany Millwork Inc
2525 SW 3rd Ave.
Suite 210
MIAMI FLORIDA 33129
Tel.: (305) 858-0053

PRODUCT:
MAHOGANY CASEMENT WINDOW

Engineering:
EngCo Inc.
CA 8116
6971 W. Sunrise Blvd. 104
Plantation, Fl. 33313
Tel.: (954) 585-0304

JUN 2 8 2002

Engineer Seal
Pedro De Figueiredo
PE 52609

Date: 06/24/02
Scale: NA
Design by: PPMF

Revision:

Drawing Number
02-523r1

Sheet
2 of 7

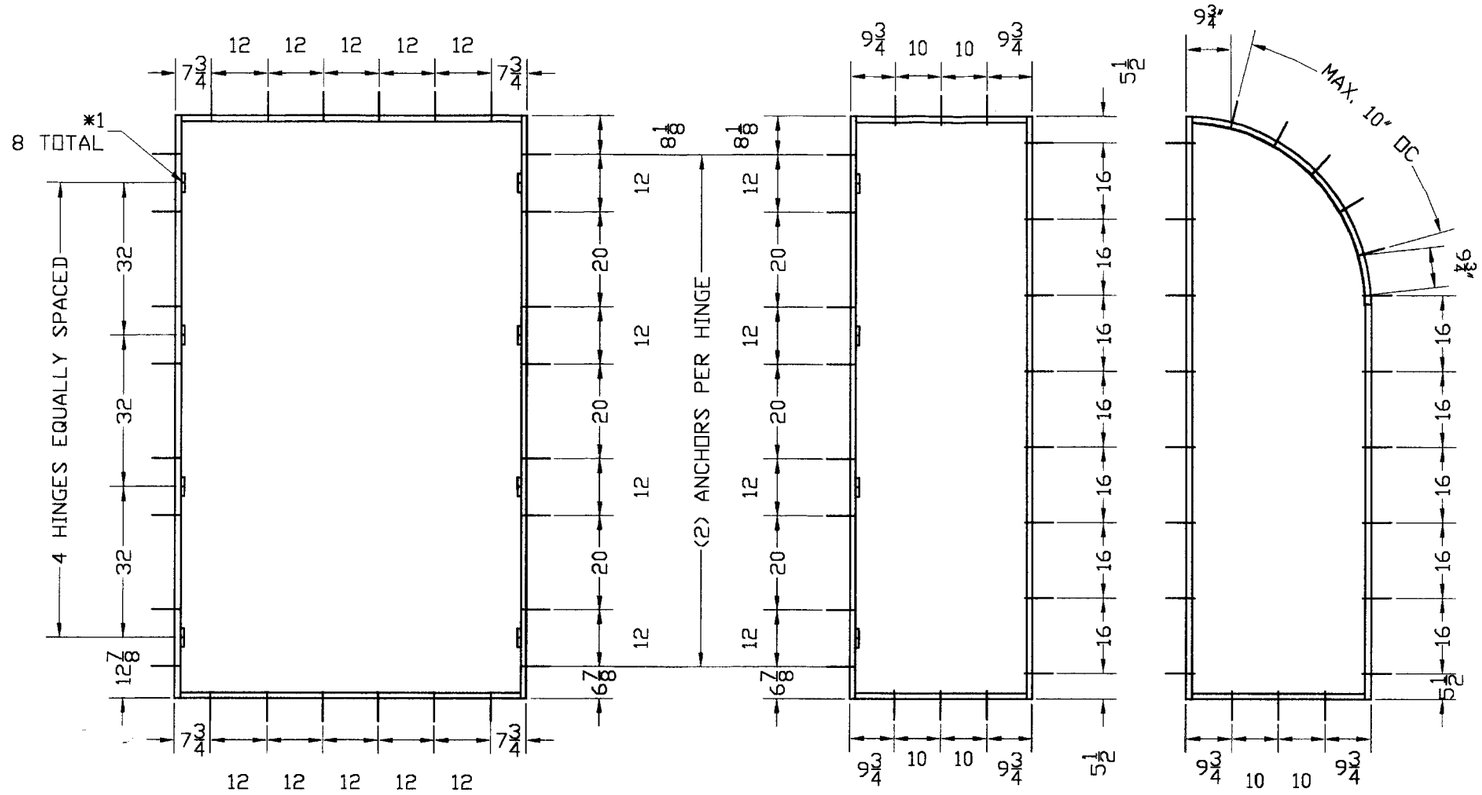

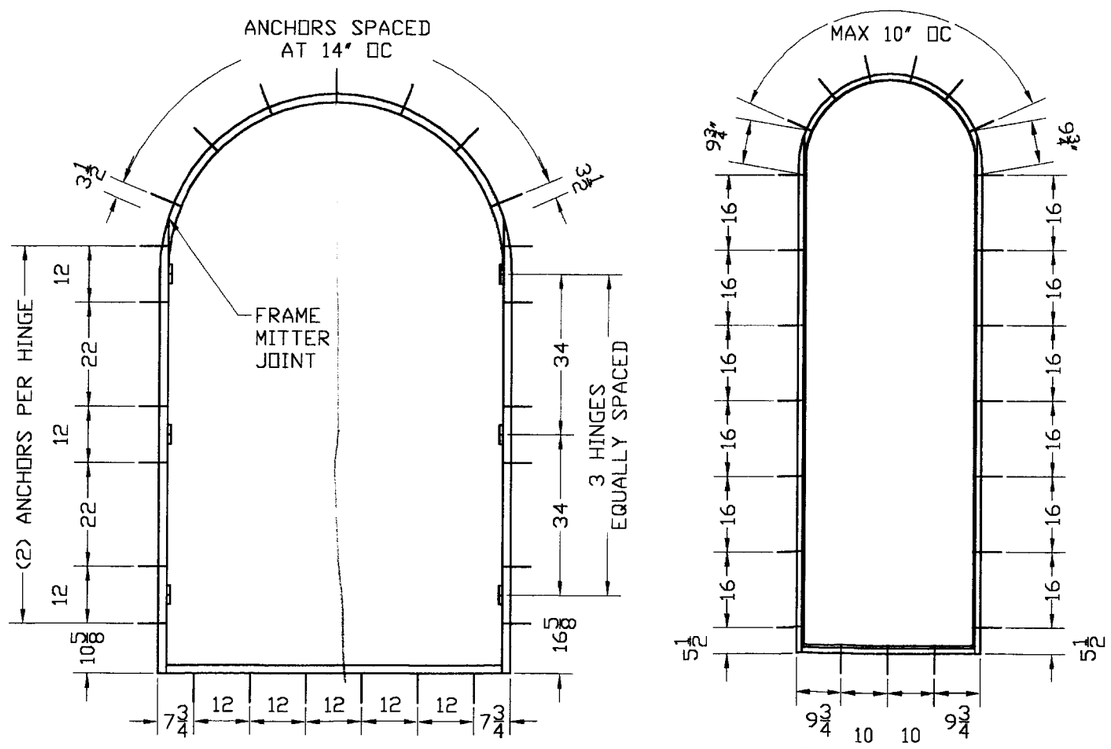

TYPICAL ANCHORAGE LAY-OUT

(SEE SHEET 6 OF 7 FOR ANCHOR DETAILS)

Approved as complying with the
Florida Buiding Code
Date August 8, 2002
NOA# 02-0510.03
Miami Dade Product Control
Division
By

MANUFACTURER:
Roatan Mahogany Millwork Inc
2525 SW 3rd Ave.
Suite 210
MIAMI FLORIDA 33129
Tel.: (305) 858-0053

PRODUCT:
MAHOGANY CASEMENT WINDOW

Engineering:
EngCo Inc.
CA 8116
6971 W. Sunrise Blvd. 104
Plantation, Fl. 33313
Tel.: (954) 585-0304

JUN 28 2002
Engineer Seal
Pedro De Figueiredo
PE 52609

Date: 06/24/02
Scale: 1:1/4 & 3/8
Design by: PPMF

Revision:

Drawing Number
02-523r1

CLADDING OPTIONS

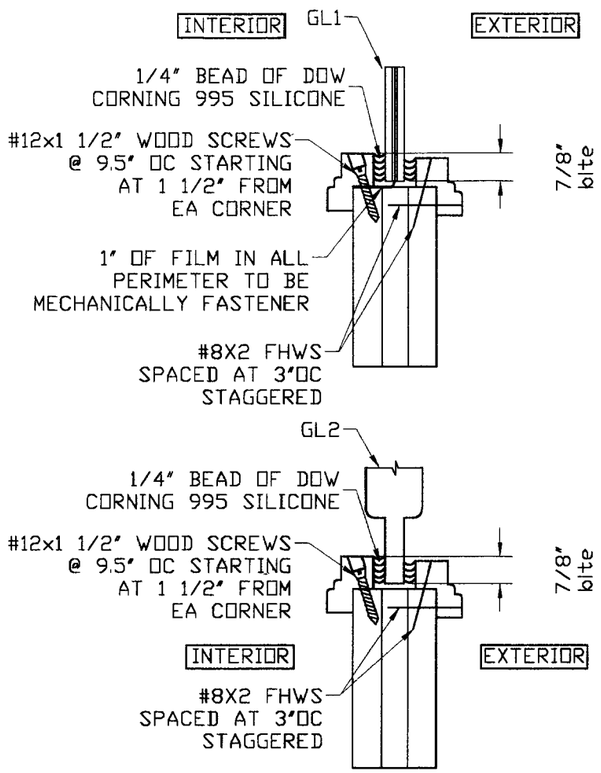

TYPICAL SECTIONS

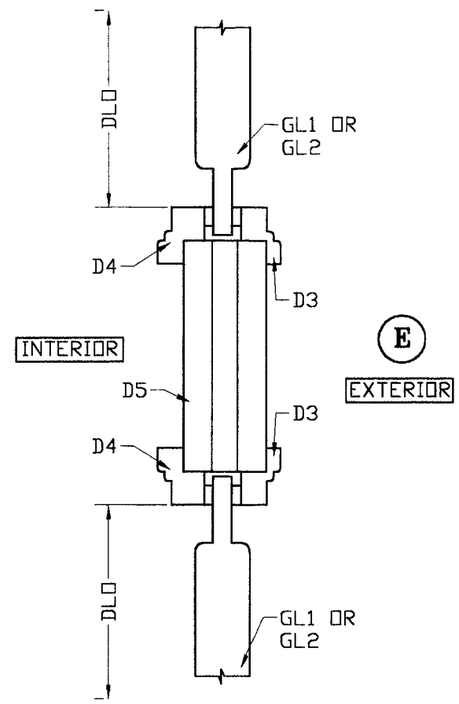

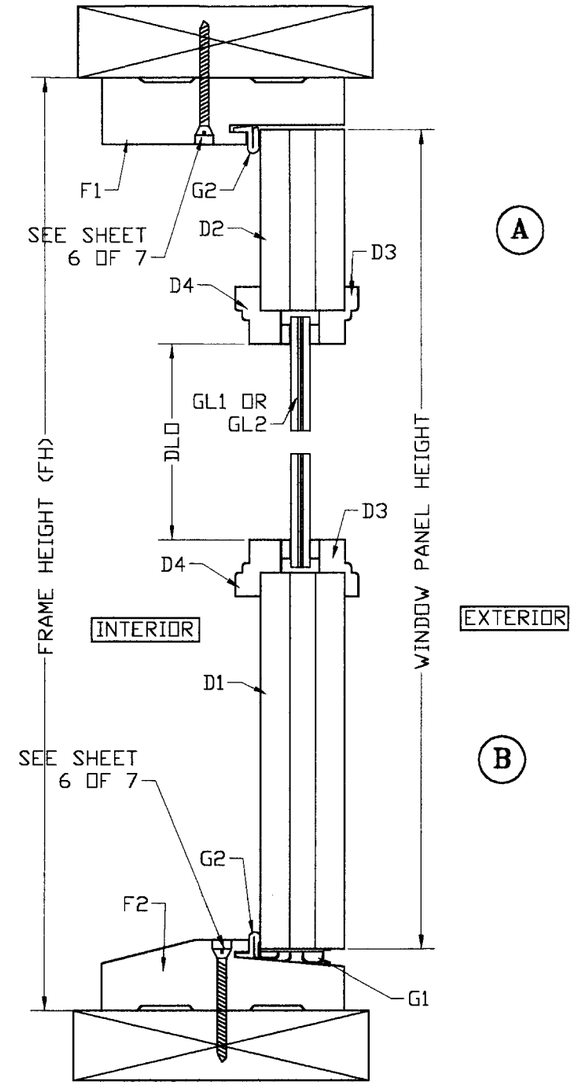

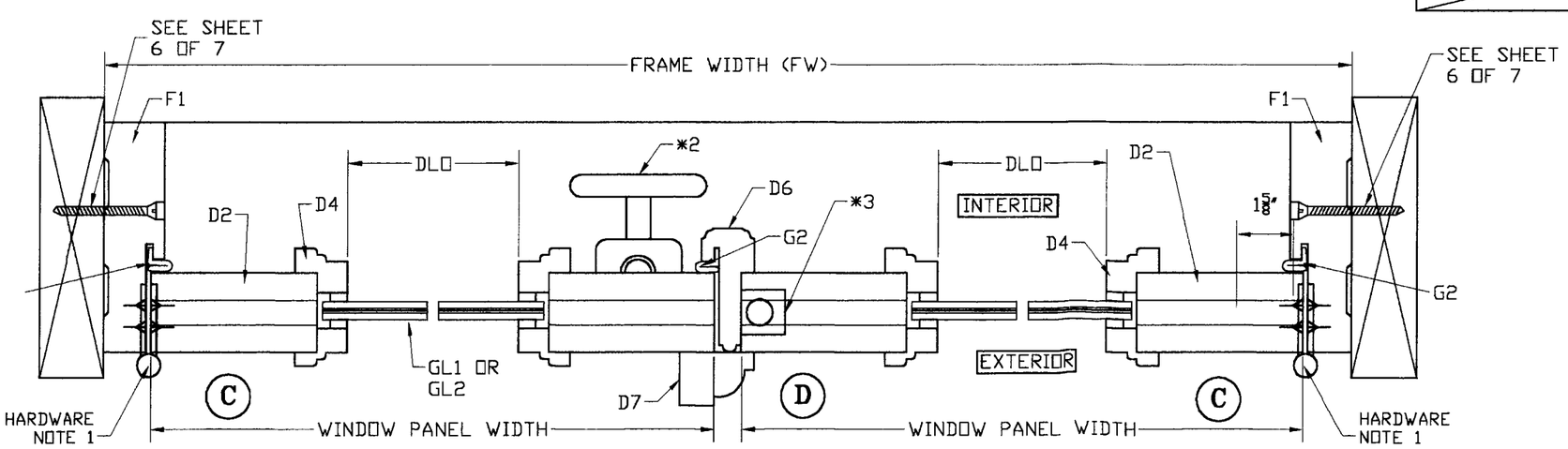

Approved as complying with the Florida Building Code
Date August 8, 2002
NOA# 02-0510.03
Miami Dade Product Control Division
By Claudine Barman

MANUFACTURER:
Roatan Mahogany Millwork Inc
2525 SW 3rd Ave.
Suite 210
MIAMI FLORIDA 33129
Tel.: (305) 858-0053

PRODUCT:
MAHOGANY CASEMENT WINDOW

Engineering:
EngCo Inc.
CA 8116
6971 W. Sunrise Blvd. 104
Plantation, Fl. 33313
Tel.: (954) 585-0304

JUN 28 2002

Engineer Seal
Pedro De Figueiredo
PE 52609

Date: 6/24/02
Scale: 1:1/4 & 3/8
Design by: PPMF

Revision:

Drawing Number
02-523r1

NATIONAL .60" DIAM. THROW BOLT

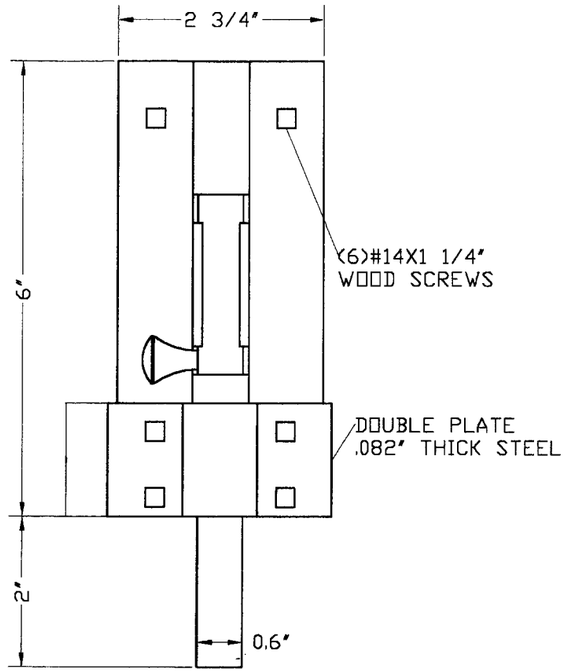

HARDWARE LAY-OUT

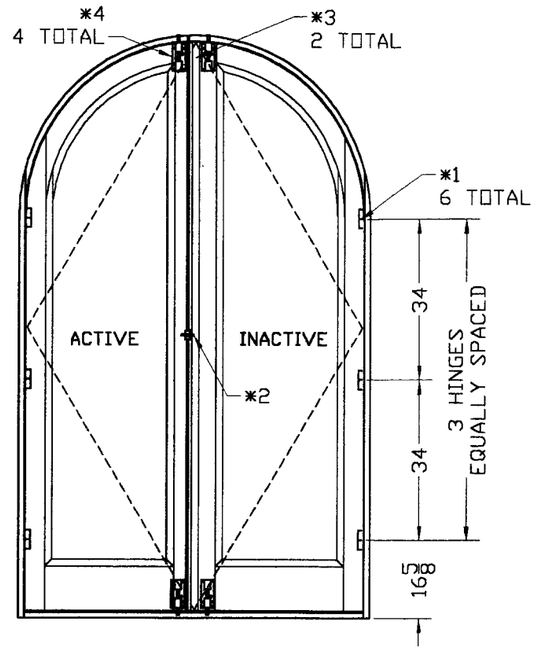

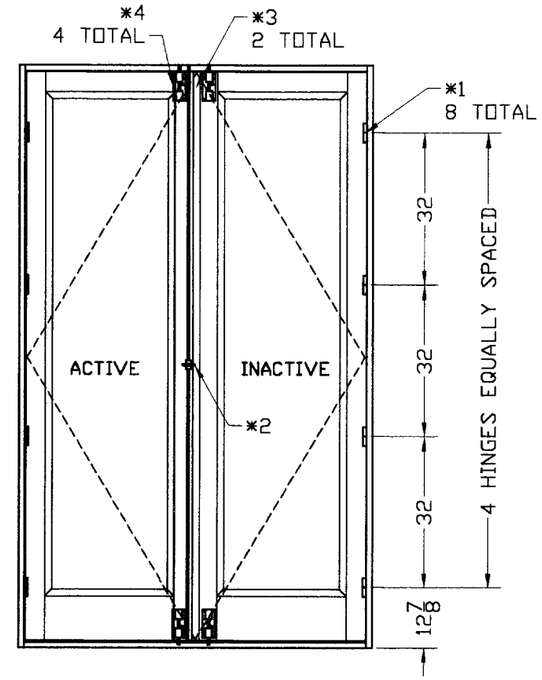

* HARDWARE

1- 4 1/2"x 4 1/2"x .136 HAGER 1279 HINGES SPACED AS PER ELEVATIONS ABOVE AND CONNECTED WITH (8) #12x1 1/4" FH SMS. (SQUARE WINDOW, 4 PER LEAF AND ARCH WINDOW, 3 PER LEAF)
2- ARDIMPEX THREE POINT CREMONS ON ACTIVE LEAF FASTENED WITH (12) #10X 1 1/2" FH SMS.
3- HARROW PRODUCTS INC. FLUSH BOLTS 296G UL LISTED TOP AND BOTTOM OF INACTIVE LEAF.
4- SECONDARY LOCKS (ACTIVATE ONLY WHEN HURRICANE FORCE WINDS ARE EXPECTED) - NATIONAL 0.60 DIA THROW BOLT ANCHORED WITH (6) #14X1 1/4" ON ACTIVE AND INACTIVE DOORS TOP AND BOTTOM RAILS.

ARDIMPEX THREE POINT CREMONES

SAME DETAIL TOP AND BOTTOM

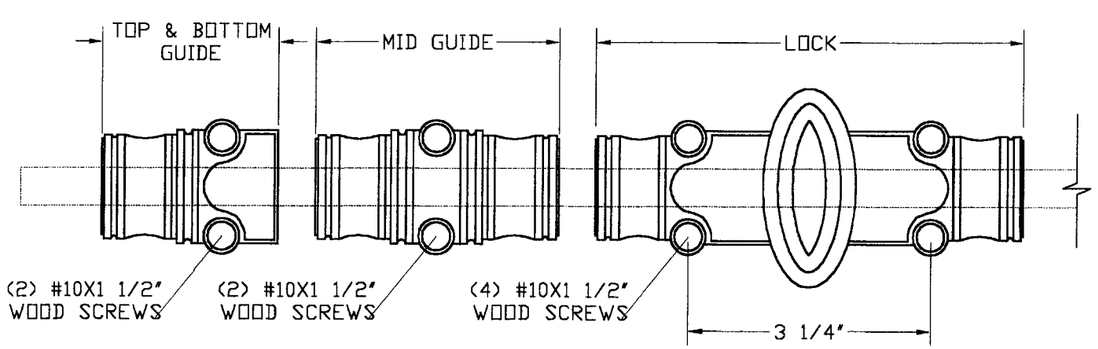

Approved as complying with the Florida Buiding Code
Date August 8, 2002
NOA# 02-0510.03
Miami Dade Product Control Division
By Theodore Lemon

MANUFACTURER:
Roatan Mahogany Millwork Inc
2525 SW 3rd Ave.
Suite 210
MIAMI FLORIDA 33129
Tel.: (305) 858-0053

PRODUCT:
MAHOGANY CASEMENT WINDOW

Engineering:
EngCo Inc.
CA 8116
6971 W. Sunrise Blvd. 104
Plantation, Fl. 33313
Tel.: (954) 585-0304

JUN 2 8 2002

Engineer Seal
Pedro De Figueiredo
PE 52609

Date: 06/24/02
Scale: NA
Design by: PPMF

Revision:

Drawing Number
02-523r1

Sheet
5 of 7

FRAMING ANCHORAGE DETAILS

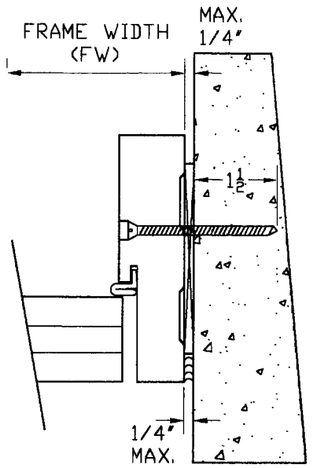

OPTION 1

FRAME WITH MAXIMUM 1/4" PT WOOD SHIM
1/4" TAPCONS BY ELCO WITH 1 1/2" MIN.
EMBEDMENT INTO 3320 PSI CONCRETE
(SEE SHEET 3 OF 7 FOR ANCHORS LAY-OUT)

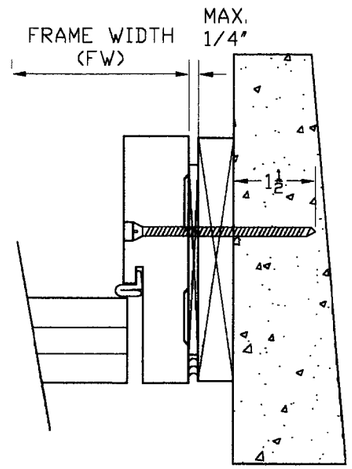

OPTION 2

FRAME WITH MAXIMUM 1/4" PT WOOD SHIM
AND 1"X PT CONT. WOOD SPACER
1/4" TAPCONS BY ELCO WITH 1 1/2" MIN.
EMBEDMENT INTO 3320 PSI CONCRETE
(SEE SHEET 3 OF 7 FOR ANCHORS LAY-OUT)

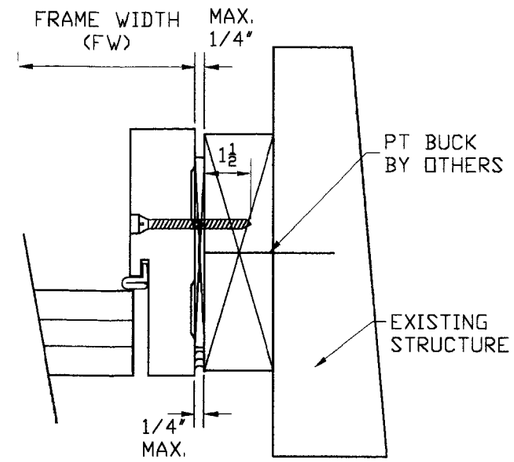

OPTION 3

FRAME WITH MAXIMUM 1/4" PT WOOD SHIM
AND 2"X PT CONT. WOOD BUCK BY OTHERS
#14 SS WOOD SCREWS WITH 1 1/2" MIN.
EMBEDMENT INTO WOOD (SG=.55)
(SEE SHEET 3 OF 7 FOR ANCHORS LAY-OUT)

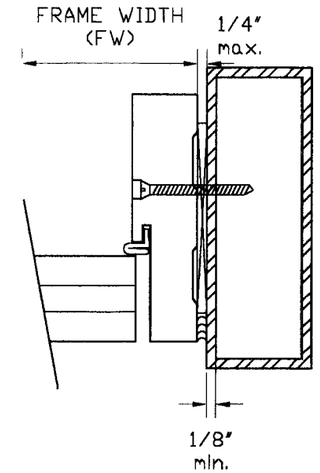

OPTION 4

FRAME WITH MAXIMUM 1/4" PT WOOD SHIM
1/4"-20 HWH DRILFLEX SELF DRILLING
SCREWS INTO MIN. 1/8" A36 STEEL
(SEE SHEET 3 OF 7 FOR ANCHORS LAY-OUT)

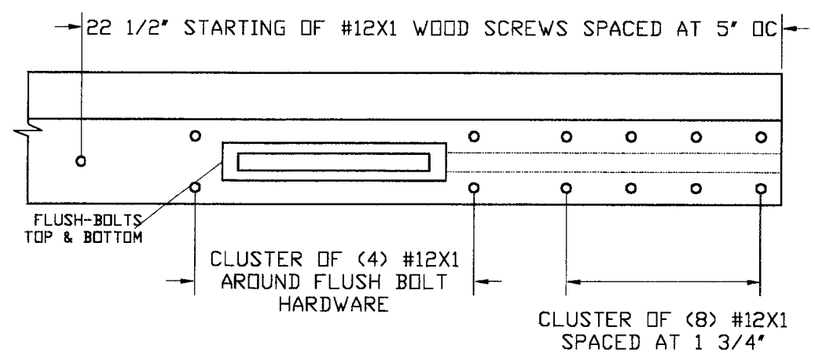

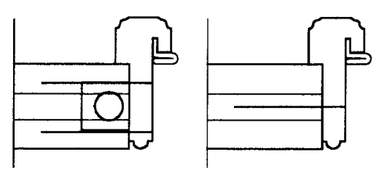

ACTIVE ASTRAGAL INSTALLATION TO WINDOW STILE

SAME DETAIL TOP AND BOTTOM

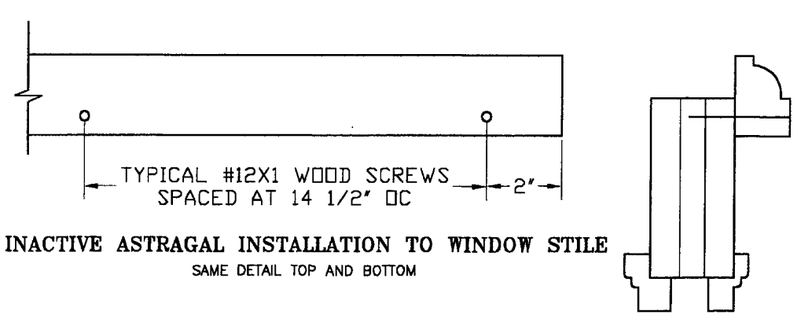

INACTIVE ASTRAGAL INSTALLATION TO WINDOW STILE

SAME DETAIL TOP AND BOTTOM

TYPICAL CORNER FRAMING CONSTRUCTION

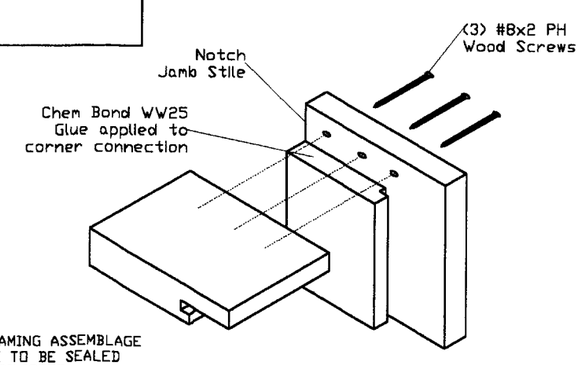

TYPICAL WINDOW CORNER CONSTRUCTION

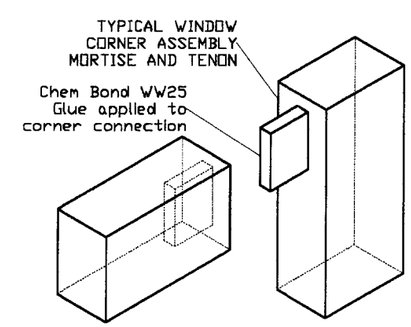

NOTE: AFTER FRAMING ASSEMBLAGE
ALL JOINTS ARE TO BE SEALED
WITH DOW 995 SILICONE.

FRAME AND WINDOW ASSEMBLY

Approved as complying with the
Florida Building Code
Date August 8, 2002
NOA# 02-0510.03
Miami Dade Product Control
Division
By Theodore Benson

MANUFACTURER:
Roatan Mahogany Millwork Inc
2525 SW 3rd Ave.
Suite 210
MIAMI FLORIDA 33129
Tel.: (305) 858-0053

PRODUCT:
MAHOGANY CASEMENT WINDOW

Engineering:
EngCo Inc.
CA 8116
6971 W. Sunrise Blvd. 104
Plantation, Fl. 33313
Tel.: (954) 585-0304

JUN 28 2002
Engineer Seal
Pedro De Figueiredo
PE 52609

Date: 06/24/02
Scale: NA
Design by: PPMF

Revision:

Drawing Number
02-523r1

WINDOW PARTS

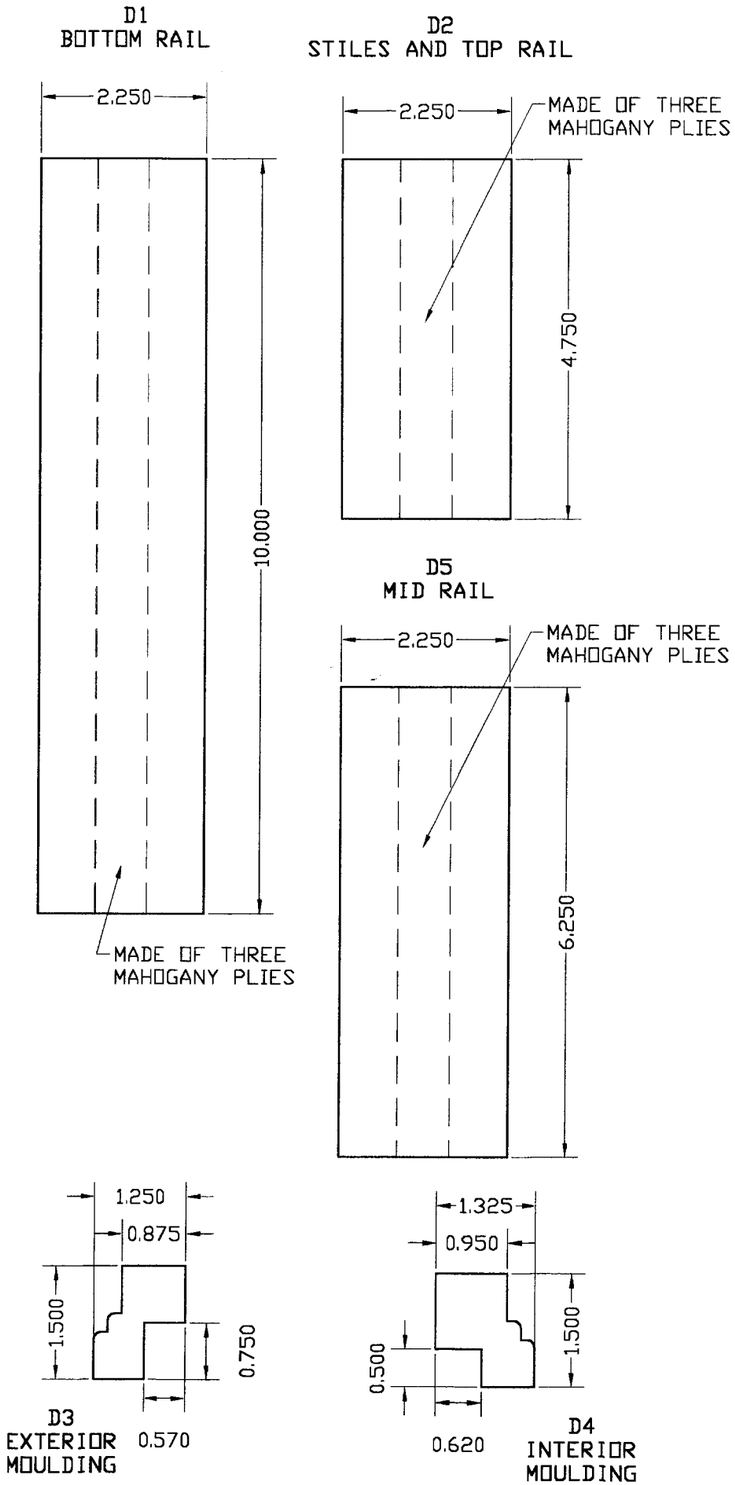

WINDOW CLADDING

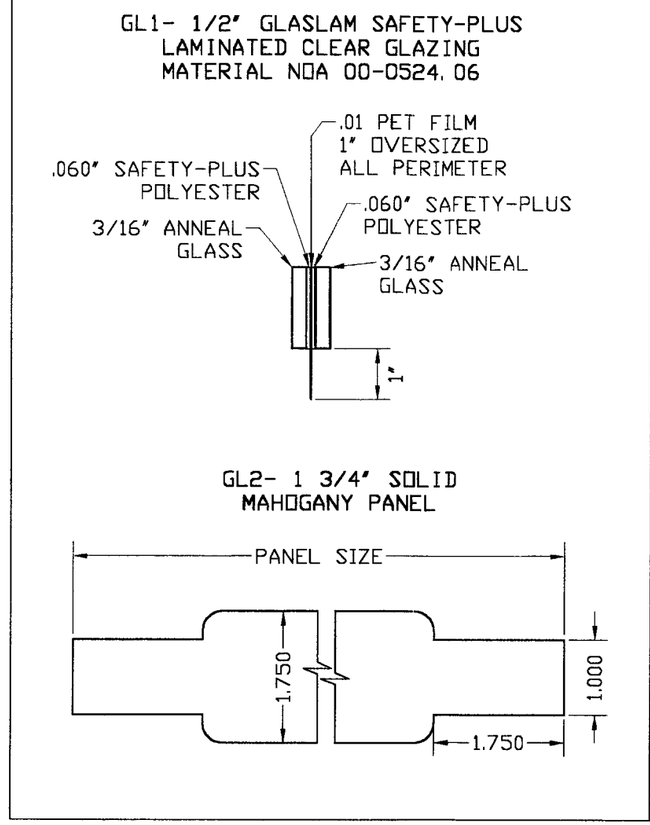

FRAME PARTS

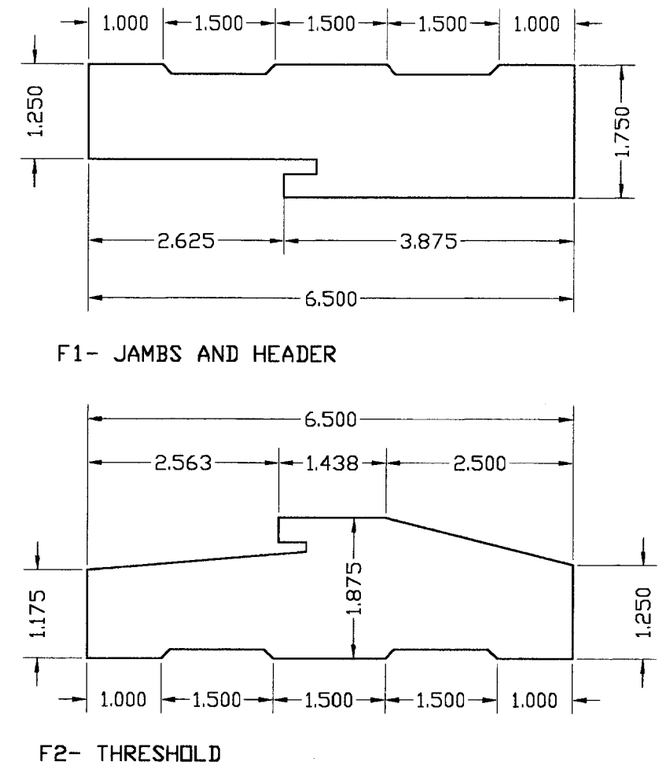

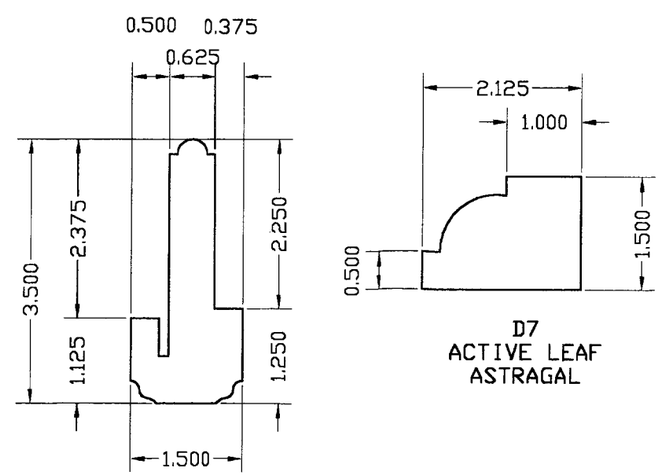

GASKETS

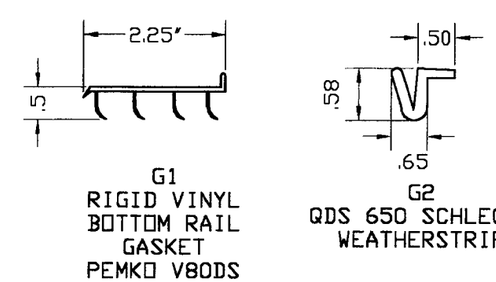

Approved as complying with the Florida Building Code
Date August 8, 2002
NOA# 02-0510.03
Miami Dade Product Control Division
By Theodore Berman

MANUFACTURER:
Roatan Mahogany Millwork Inc
2525 SW 3rd Ave. Suite 210
MIAMI FLORIDA 33129
Tel.: (305) 858-0053

PRODUCT:
MAHOGANY CASEMENT WINDOW

Engineering:
EngCo Inc.
CA 8116
6971 W. Sunrise Blvd. 104
Plantation, Fl. 33313
Tel.: (954) 585-0304

JUN 2 8 2002
Engineer Seal
Pedro De Figueiredo
PE 52609

Date: 6/24/02
Scale: 1:1/2
Design by: PPMF

Revision:

Drawing Number
02-523r1

Sheet
7 of 7