MIAMI-DADE

BUILDING CODE COMPLIANCE OFFICE (BCCO)
PRODUCT CONTROL DIVISION

MIAMI-DADE COUNTY, FLORIDA
METRO-DADE FLAGLER BUILDING
140 WEST FLAGLER STREET, SUITE 1603
MIAMI, FLORIDA 33130-1563
(305) 375-2901 FAX (305) 375-2908

NOTICE OF ACCEPTANCE (NOA)

Therma-Tru Corporation
108 Mutzfeld Road
Butler, IN 46721

SCOPE:
This NOA is being issued under the applicable rules and regulations governing the use of construction materials. The documentation submitted has been reviewed by Miami-Dade County Product Control Division and accepted by the Board of Rules and Appeals (BORA) to be used in Miami Dade County and other areas where allowed by the Authority Having Jurisdiction (AHJ).

This NOA shall not be valid after the expiration date stated below. The Miami-Dade County Product Control Division (In Miami Dade County) and/or the AHJ (in areas other than Miami Dade County) reserve the right to have this product or material tested for quality assurance purposes. If this product or material fails to perform in the accepted manner, the manufacturer will incur the expense of such testing and the AHJ may immediately revoke, modify, or suspend the use of such product or material within their jurisdiction. BORA reserves the right to revoke this acceptance, if it is determined by Miami-Dade County Product Control Division that this product or material fails to meet the requirements of the applicable building code.

This product is approved as described herein, and has been designed to comply with the High Velocity Hurricane Zone of the Florida Building Code.

DESCRIPTION: Series "Benchmark" S/E Double Outswing Opaque Insulated Steel Door

APPROVAL DOCUMENT: Drawing No. **O-99-1015**, titled "Outswing Opaque Insulated Steel Door in Wood Frame", sheets 1 through 4, prepared by R.W. Building Consultants, Inc., dated 7/28/99, bearing the Miami-Dade County Product Control Renewal stamp with the Notice of Acceptance number and expiration date by the Miami-Dade County Product Control Division.

MISSILE IMPACT RATING: Large and Small Missile Impact

LABELING: Each unit shall bear a permanent label with the manufacturer's name or logo, city, state and following statement: "Miami-Dade County Product Control Approved", unless otherwise noted herein.

RENEWAL of this NOA shall be considered after a renewal application has been filed and there has been no change in the applicable building code negatively affecting the performance of this product.

TERMINATION of this NOA will occur after the expiration date or if there has been a revision or change in the materials, use, and/or manufacture of the product or process. Misuse of this NOA as an endorsement of any product, for sales, advertising or any other purposes shall automatically terminate this NOA. Failure to comply with any section of this NOA shall be cause for termination and removal of NOA.

ADVERTISEMENT: The NOA number preceded by the words Miami-Dade County, Florida, and followed by the expiration date may be displayed in advertising literature. If any portion of the NOA is displayed, then it shall be done in its entirety.

INSPECTION: A copy of this entire NOA shall be provided to the user by the manufacturer or its distributors and shall be available for inspection at the job site at the request of the Building Official.
This NOA **renews NOA # 99-0909.01** and, consists of this page 1 as well as approval document mentioned above. The submitted documentation was reviewed by **Manuel Perez, P.E.**

PRODUCT CONTROL ACCEPTED

BENCHMARK

OUTSWING OPAQUE DOUBLE DOOR

STEEL EDGE INSULATED STEEL DOOR WITH WOOD FRAMES

GENERAL NOTES

1. THIS PRODUCT IS DESIGNED TO MEET THE SOUTH FLORIDA BUILDING CODE 1994 EDITION FOR MIAMI-DADE COUNTY.
2. WOOD BUCKS BY OTHERS, MUST BE ANCHORED PROPERLY TO TRANSFER LOADS TO THE STRUCTURE.
3. PRODUCT ANCHORS SHALL BE AS LISTED AS SPACED AS SHOWN ON DETAILS. ANCHOR EMBEDMENT TO BASE MATERIAL SHALL BE BEYOND WALL FINISH OR STUCCO.
4. IMPACT RESISTANT SHUTTERS NOT REQUIRED.
5. DESIGN PRESSURE RATING SHALL BE AS FOLLOWS:
   - FOR OPAQUE MODELS POS. +47.5 NEG. −50.4
6. ALL DIMENSIONS ARE GIVEN IN INCHES UNLESS OTHERWISE SHOWN.
7. LATEX OR SILICONE CAULKING AS NEEDED TO SEAL UNIT INTO BUILDING ENVELOPE.

OUTSWING INSULATED STEEL DOOR
(Common to all frame conditions)

Door Leaf Construction:

Face sheets: 24 ga. (0.025") minimum thickness, Galvanized steel A-525 commercial quality – AKDQ per ASTM 620 with yield strength Fy(ave.)=22.2 ksi.

Core design: Polyurethane foam (Carpenter Chemical with 1.9# density) core laminated to inside faces.

Construction:

The vertical infills are extensions of the skin, roll formed to a mechanical interlock, horizontal edges are welded together at two places each.

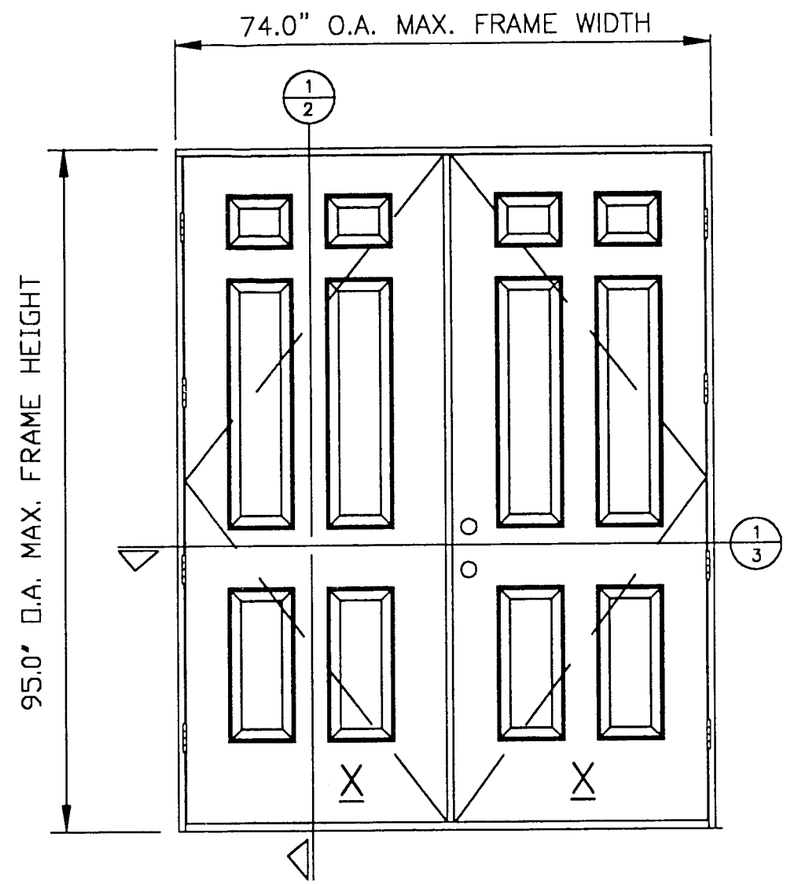

8'-0" HEIGHT
COLONIAL 6 PANEL DOOR
VIEWED FROM EXTERIOR

(IMPACT SHUTTERS NOT REQUIRED

TABLE OF CONTENTS

SHEET #	DESCRIPTION
1	COMMON (GENERAL NOTES, TYPICAL ELEVATION)
2	VERTICAL CROSS SECTION & BILL OF MATERIALS
3	HORIZONTAL CROSS SECTION & DOOR MODELS
4	ANCHOR LOCATIONS

DESIGN PRESSURE RATING

	WHERE WATER INFILTRATION REQUIREMENT IS NEEDED	WHERE WATER INFILTRATION REQUIREMENT IS NOT NEEDED
POSITIVE	+ 47.5 PSF	+ 47.5 PSF
NEGATIVE	− 50.4 PSF	− 50.4 PSF

PRODUCT RENEWED
as complying with the Florida Building Code
Acceptance No. 02-0805.03
Expiration Date August 31, 2007
By [signature]
Miami Dade Product Control Division

APPROVED AS COMPLYING WITH THE SOUTH FLORIDA BUILDING CODE
DATE September 30 1999
BY [signature]
PRODUCT CONTROL DIVISION
BUILDING CODE COMPLIANCE OFFICE
ACCEPTANCE NO. 99-0909.01

GENERAL PRODUCTS CO. INC.
P.O. BOX 7387
FREDERICKSBURG, VA 22404
PH. (540) 898-5700

PRODUCT:
OUTSWING OPAQUE INSULATED STEEL DOOR IN WOOD FRAME

PART OR ASSEMBLY:
GENERAL NOTES AND ELEVATIONS

NO.	DATE	BY

REVISIONS

RW CONSULTING
(813) 684-3831

DATE: 7-28-99
SCALE: N.T.S.
DWG. BY: R.W.B.C
CHK. BY:
DRAWING NO.: 0-99-1015
SHEET 1 OF 4

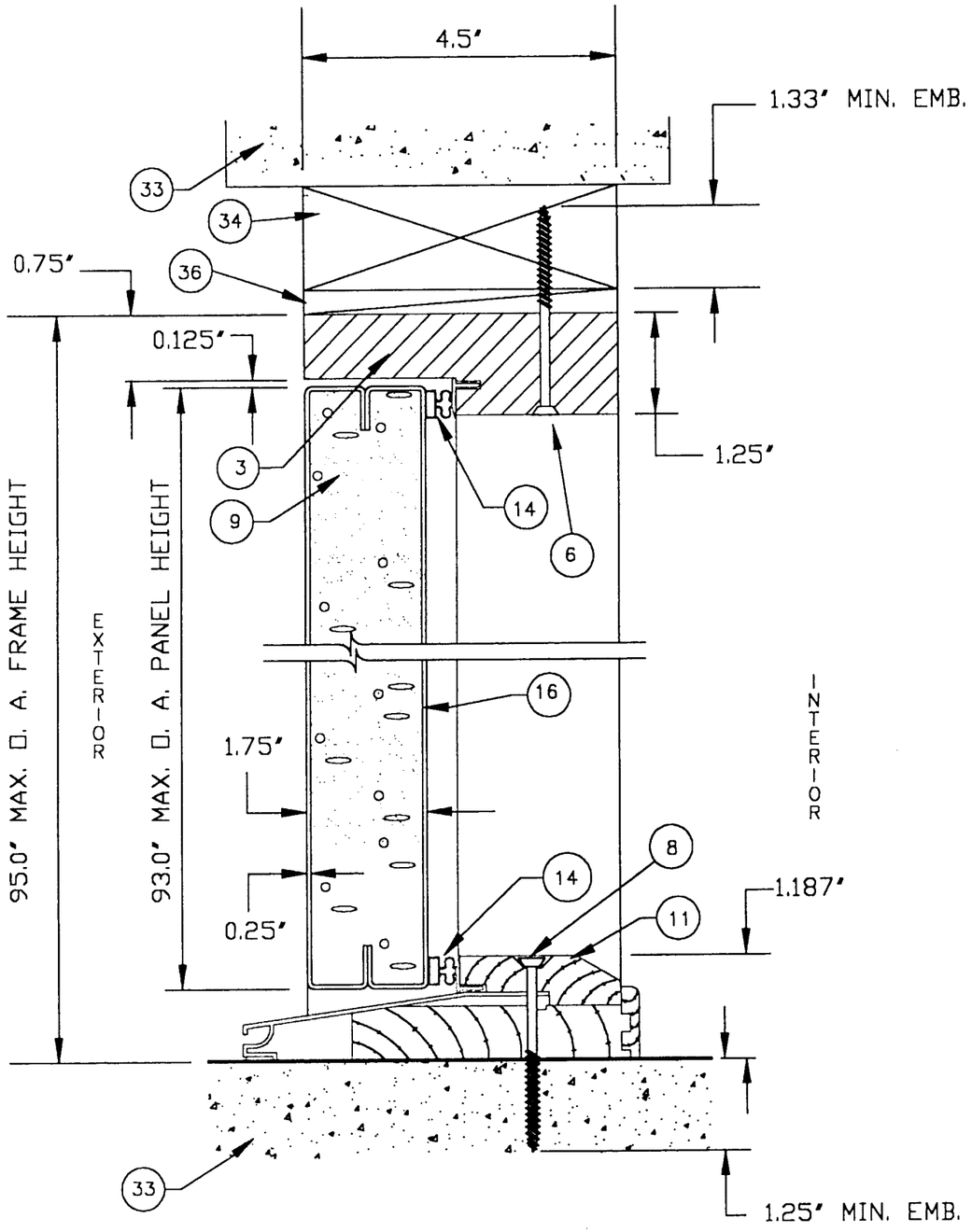

1/2 VERTICAL CROSS SECTION
OPAQUE DOOR

ITEM	DESCRIPTION
1	Extruded aluminum astragal 6063-T5
2	Hinge jamb (1-1/4" x 4-1/2" Wood Jamb)
3	Head jamb (1-1/4" x 4-1/2" Wood Jamb)
4	Benchmark 4" x 4" butt hinges 12ga.(.085") C.R steel
5	#9 x 5/8" PFH wood screw
6	#10 x 3" PFH wood screw
7	#10 x 2" PFH wood screw
8	3/16" tapcon (1-1/4" into masonry)
9	Polyurethane foam (Carpenter Chemical - 1.9 lb. density)
10	-
11	Bump face wood capped aluminum threshold
12	-
13	Compression weatherstrip Schlegel Q-Lon QDS 650
14	Magnetic weatherstrip TPE
16	Face sheet 24ga.(.024" thk.min) galv.steel
	steel A-525 Fy=22.2 ksi.(min.)
17	Hinge steel reinforcement for door (.055" x 1-1/8" x 5-1/4")
18	Wood lock reinf. (1.6875" x 4.0" x 4.0")
20	-
21	#8 x 1" PFH wood screw
22	Face plate filler
23	-
24	#8 x 1/2" lg. type "AB" PH. SMS.
25	-
26	Schlage - Grade II A53PD04-PLY-605 entry lock
26A	Weslock series 1800 lock
26B	Kwikset series 200 DL passage
26C	Kwikset series 400 DL passage
27	Schlage Grade I - B460P-605 single cylinder deadbolt
27A	Weslock series 1800 deadbolt
27B	Kwikset 660 deadbolt
27C	Kwikset 680 deadbolt
28	#8 x 1-3/4" PFH wood screw
29	-
30	#8 x 2-1/2" PFH wood screw
31	6" sliding bolt by National or Ives
32	-
33	Masonry wall
34	2x wood buck
35	-
36	1/4" max. shim space

GENERAL PRODUCTS CO. INC.
P.O. BOX 7387
FREDERICKSBURG, VA 22404
PH. (540) 898-5700

PRODUCT: OUTSWING OPAQUE INSULATED STEEL DOOR IN WOOD FRAME

PART OR ASSEMBLY: VERTICAL CROSS SECTIONS & BILL OF MATERIALS

NO.	DATE	REVISIONS	BY

RW CONSULTING
(813) 684-3831

DATE: 7-28-99
SCALE: N.T.S.
DWG. BY: R.W.B.C
CHK. BY:
DRAWING NO.: 0-99-1015
SHEET 2 OF 4

PRODUCT RENEWED
as complying with the Florida Buiding Code
Acceptance No 02-0805.03
Expiration Date August 31, 2007
By Miami-Dade Product Control Division

APPROVED AS COMPLYING WITH THE SOUTH FLORIDA BUILDING CODE
DATE September 30, 1999
BY Miami-Dade
PRODUCT CONTROL DIVISION
BUILDING CODE COMPLIANCE OFFICE
ACCEPTANCE NO 99-0909.01

1/3 HORIZONTAL CROSS SECTION OPAQUE DOOR

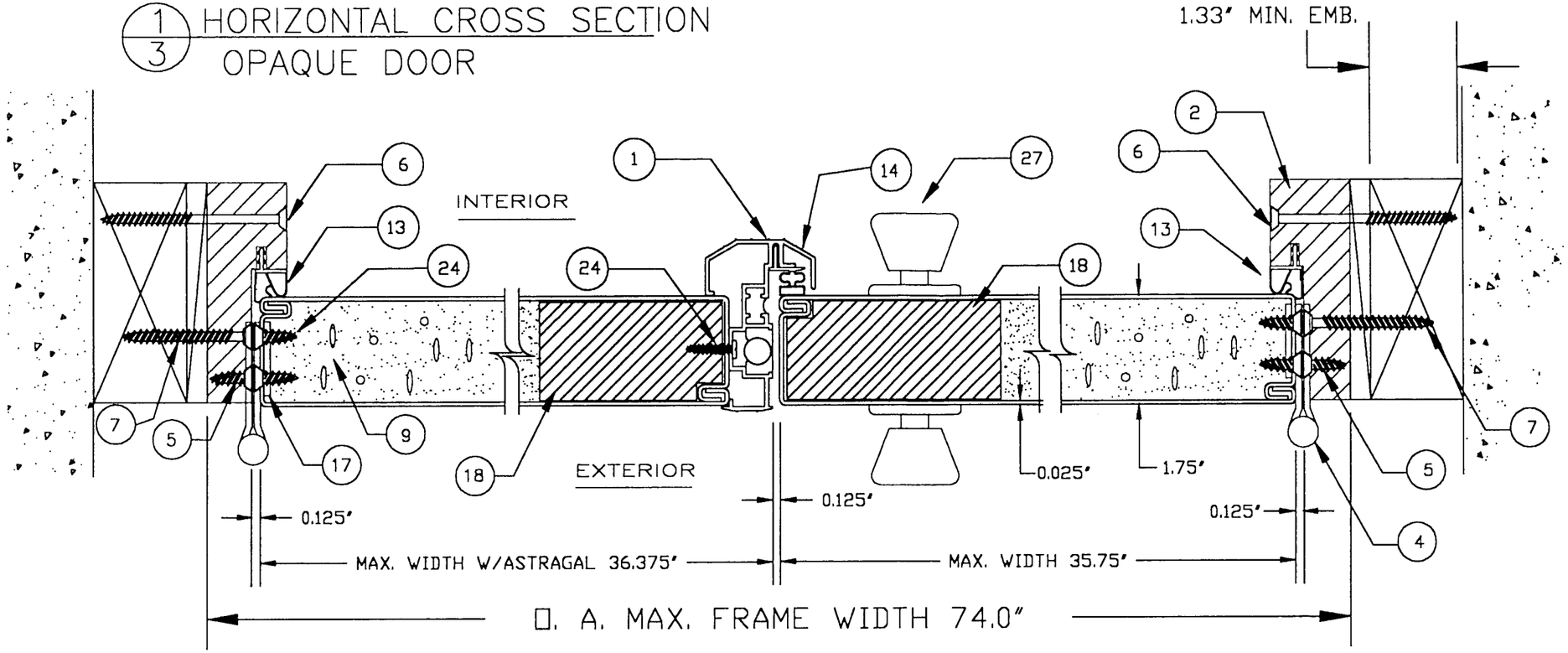

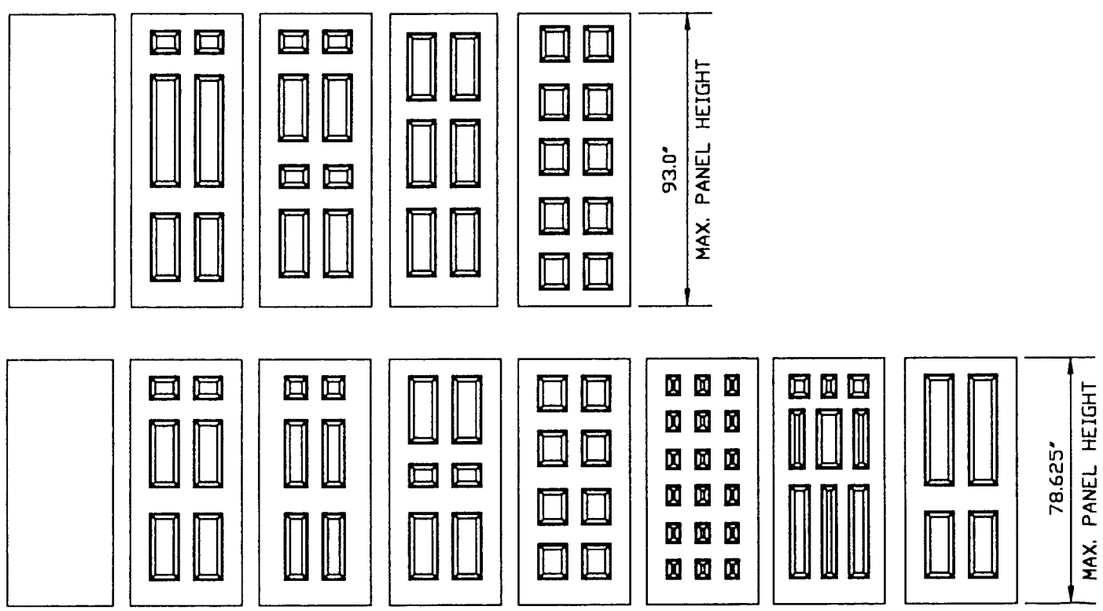

OPAQUE DOOR MODELS (SHUTTERS NOT REQUIRED)

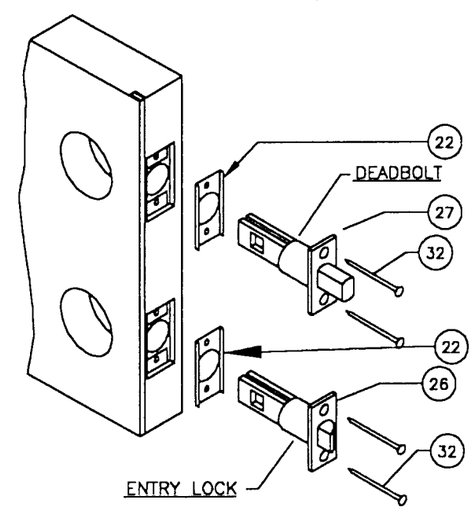

PRODUCT RENEWED
as complying with the Florida Buiding Code
Acceptance No 02-0805.03
Expiration Date August 31 2007
By Miami Dade Product Control Division

APPROVED AS COMPLYING WITH THE SOUTH FLORIDA BUILDING CODE
DATE September 30 19 99
BY
PRODUCT CONTROL DIVISION
BUILDING CODE COMPLIANCE OFFICE
ACCEPTANCE NO. 99-0909.01

GENERAL PRODUCTS CO. INC.
P.O. BOX 7387
FREDERICKSBURG, VA 22404
PH. (540) 898-5700

PRODUCT: OUTSWING OPAQUE INSULATED STEEL DOOR IN WOOD FRAME

PART OR ASSEMBLY: HORIZONTAL CROSS SECTIONS & DOOR MODELS

NO.	DATE	REVISIONS	BY

RW CONSULTING
(813) 684-3831

DATE: 7-28-99
SCALE: N.T.S.
DWG. BY: R.W.B.C
CHK. BY:
DRAWING NO.: 0-99-1015
SHEET 3 OF 4

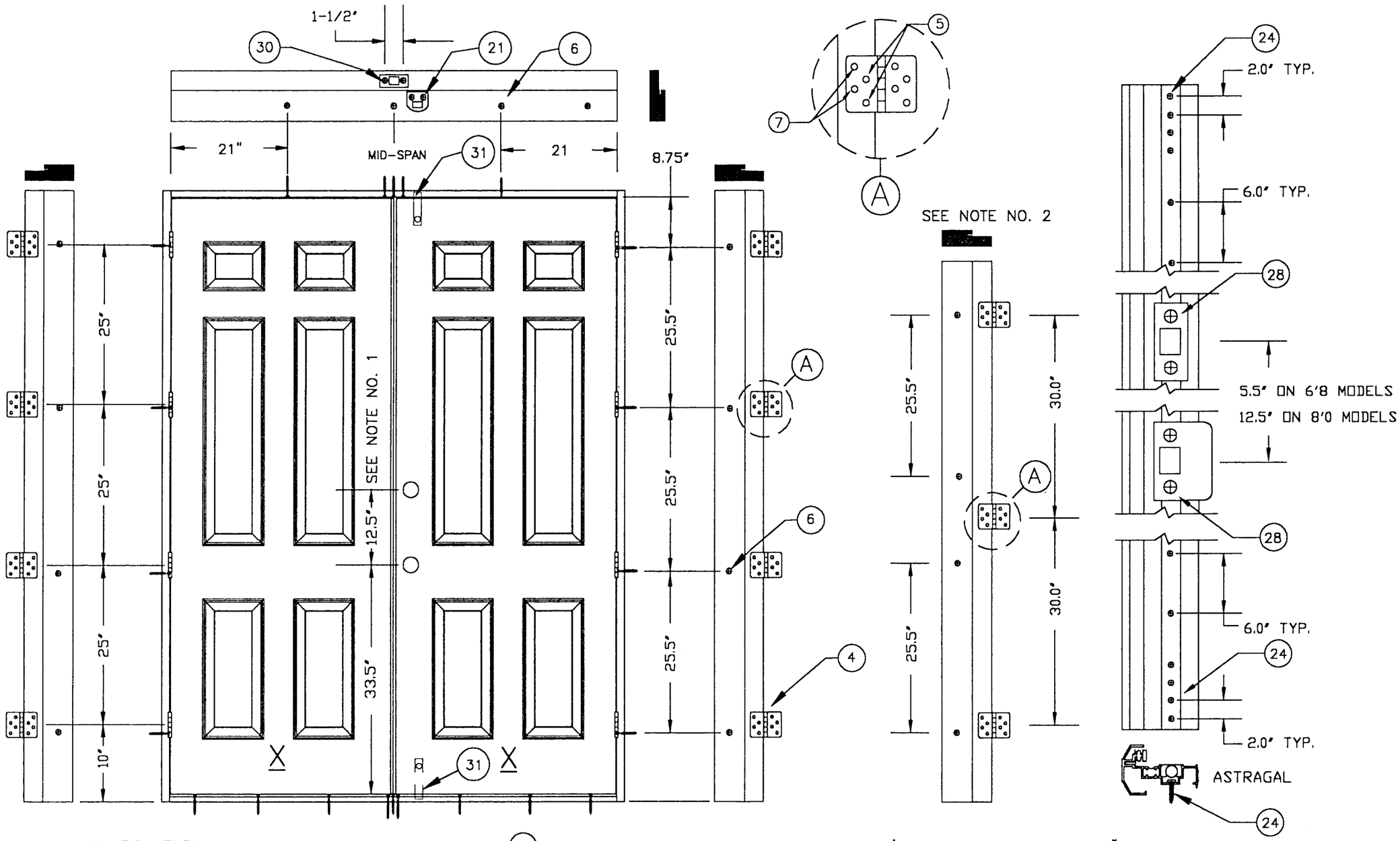

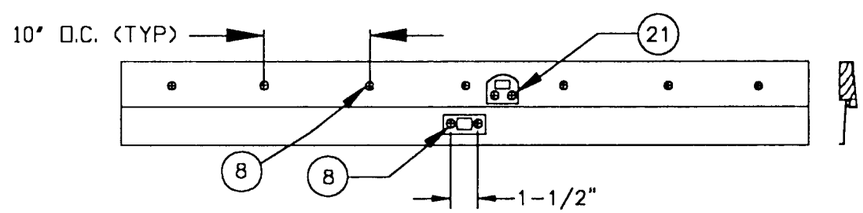

ANCHOR LAYOUT FOR 8'-0" DOOR

NOTE: 1. 6'8 DOORS, DEADBOLT @ 5.5" CENTERLINE
2. 6'8 DOORS, 3 HINGES PER HINGE JAMB

PRODUCT RENEWED
as complying with the Florida Buiding Code
Acceptance No. 02-0805.03
Expiration Date August 31, 2007
By Miami-Dade Product Control Division

APPROVED AS COMPLYING WITH THE SOUTH FLORIDA BUILDING CODE
DATE September 30, 1999
BY
PRODUCT CONTROL DIVISION
BUILDING CODE COMPLIANCE OFFICE
ACCEPTANCE NO. 99-0909.01

GENERAL PRODUCTS CO. INC.
P.O. BOX 7387
FREDERICKSBURG, VA 22404
PH. (540) 898-5700

PRODUCT: OUTSWING OPAQUE INSULATED STEEL DOOR IN WOOD FRAME

PART OR ASSEMBLY: ANCHOR LOCATIONS

NO.	DATE	REVISIONS	BY

RW CONSULTING
(813) 684-3831

DATE: 7-28-99
SCALE: N.T.S.
DWG. BY: R.W.B.C
CHK. BY:
DRAWING NO.: 0-99-1015
SHEET 4 OF 4