MIAMI-DADE

BUILDING CODE COMPLIANCE OFFICE (BCCO)
PRODUCT CONTROL DIVISION

MIAMI-DADE COUNTY, FLORIDA
METRO-DADE FLAGLER BUILDING
140 WEST FLAGLER STREET, SUITE 1603
MIAMI, FLORIDA 33130-1563
(305) 375-2901 FAX (305) 375-2908

NOTICE OF ACCEPTANCE (NOA)

PGT Industries
1070 Technology Drive
Nokomis, FL 34275

SCOPE:
This NOA is being issued under the applicable rules and regulations governing the use of construction materials. The documentation submitted has been reviewed by Miami-Dade County Product Control Division and accepted by the Board of Rules and Appeals (BORA) to be used in Miami Dade County and other areas where allowed by the Authority Having Jurisdiction (AHJ).

This NOA shall not be valid after the expiration date stated below. The Miami-Dade County Product Control Division (In Miami Dade County) and/or the AHJ (in areas other than Miami Dade County) reserve the right to have this product or material tested for quality assurance purposes. If this product or material fails to perform in the accepted manner, the manufacturer will incur the expense of such testing and the AHJ may immediately revoke, modify, or suspend the use of such product or material within their jurisdiction. BORA reserves the right to revoke this acceptance, if it is determined by Miami-Dade County Product Control Division that this product or material fails to meet the requirements of the applicable building code.

This product is approved as described herein, and has been designed to comply with the High Velocity Hurricane Zone of the Florida Building Code.

DESCRIPTION: Series "C-700" Outswing Aluminum Casement Window

APPROVAL DOCUMENT: Drawing No. **330**, titled "Aluminum Casement Windows", sheets 1 through 9, dated 2/12/97, with revision G dated 7/26/02, prepared by manufacturer, signed and sealed by Robert L. Clark, P.E., bearing the Miami-Dade County Product Control Approval stamp with the Notice of Acceptance number and approval date by the Miami-Dade County Product Control Division.

MISSILE IMPACT RATING: None

LABELING: Each unit shall bear a permanent label with the manufacturer's name or logo, city, state and following statement: "Miami-Dade County Product Control Approved", unless otherwise noted herein.

RENEWAL of this NOA shall be considered after a renewal application has been filed and there has been no change in the applicable building code negatively affecting the performance of this product.

TERMINATION of this NOA will occur after the expiration date or if there has been a revision or change in the materials, use, and/or manufacture of the product or process. Misuse of this NOA as an endorsement of any product, for sales, advertising or any other purposes shall automatically terminate this NOA. Failure to comply with any section of this NOA shall be cause for termination and removal of NOA.

ADVERTISEMENT: The NOA number preceded by the words Miami-Dade County, Florida, and followed by the expiration date may be displayed in advertising literature. If any portion of the NOA is displayed, then it shall be done in its entirety.

INSPECTION: A copy of this entire NOA shall be provided to the user by the manufacturer or its distributors and shall be available for inspection at the job site at the request of the Building Official.

This NOA **revises and replaces NOA # 02-0423.09** and consists of this page 1 as well as approval document mentioned above.

The submitted documentation was reviewed by **Manuel Perez, P.E.**

PRODUCT CONTROL ACCEPTED

PGT Industries

NOTICE OF ACCEPTANCE: EVIDENCE SUBMITTED
(For File ONLY. Not part of NOA)

A. DRAWINGS

1. Manufacturer's die drawings and sections.

2. Drawing No. **330**, titled "Aluminum Casement Window", sheets 1 through 11, dated 2/18/97, with revision G dated 7/26/02, prepared by manufacturer, signed and sealed by Robert L. Clark, P.E.

B. TESTS

1. Test reports on: 1) Air Infiltration Test, per SFBC, PA 202-94.
2) Uniform Load Static Air Pressure Test, per SFBC, PA 202-94.
3) Water Resistance Test, per SFBC, PA 202-94.
4) Forced Entry Resistance Test, per AAMA 1302.5.
5) Large Missile Impact Test, per SFBC, PA 201-94.
6) Cyclic Wind Pressure Loading Test, per SFBC, PA 203-94.
along with installation diagram of an XOX configuration 120" wide by 64" high Series C-700 aluminum casement window glazed with 3/16" annealed ***Sentryglas***, prepared by Fenestration Testing Laboratory report No. **FTL-1517** dated January 22, 1997, signed and sealed by Gilbert Diamond, P.E.

2. Test reports on: 1) Uniform Load Static Air Pressure Test, per SFBC, PA 202-94.
2) Water Resistance Test, per SFBC, PA 202-94.
3) Forced Entry Resistance Test, per AAMA 1302.5.
along with installation diagram of an XX configuration 74-1/2" wide by 76" high Series C-700 aluminum casement window glazed with 3/16" annealed glass, prepared by Fenestration Testing Laboratory report No. **FTL-1518** dated January 13, 1997, signed and sealed by Gilbert Diamond, P.E.

3. Test reports on: 1) Air Infiltration Test, per SFBC, PA 202-94.
2) Uniform Load Static Air Pressure Test, per SFBC, PA 202-94.
3) Water Resistance Test, per SFBC, PA 202-94.
4) Forced Entry Resistance Test, per AAMA 1302.5.
along with installation diagram of a 74-1/2" wide by 76" high Series C-700 aluminum casement window glazed with 1/8" annealed glass, prepared by Fenestration Testing Laboratory report No. **FTL-1519** dated January 13, 1997, signed and sealed by Gilbert Diamond, P.E.

Manuel Perez, P.E.
Product Control Examiner
NOA No 02-0806.05
Expiration Date: April 16, 2006
Approval Date: July 24, 2003

NOTICE OF ACCEPTANCE: EVIDENCE SUBMITTED
(For File ONLY. Not part of NOA)

4. Test reports on: 1) Air Infiltration Test, per SFBC, PA 202-94.
   2) Uniform Load Static Air Pressure Test, per SFBC, PA 202-94.
   3) Water Resistance Test, per SFBC, PA 202-94.
   4) Forced Entry Resistance Test, per AAMA 1302.5.
   5) Small Missile Impact Test, per SFBC, PA 201-94.
   6) Cyclic Wind Pressure Loading, per SFBC, PA 203-94.
   along with installation diagram of an XOX configuration 120" wide by 64" high Series C-700 aluminum casement window glazed with 1/4" tempered glass, prepared by Fenestration Testing Laboratory report No. **FTL-1520** dated January 22, 1997, signed and sealed by Gilbert Diamond, P.E.
5. Test reports on: 1) Air Infiltration Test, per SFBC, PA 202-94.
   2) Uniform Load Static Air Pressure Test, per SFBC, PA 202-94.
   3) Water Resistance Test, per SFBC, PA 202-94.
   4) Forced Entry Resistance Test, per AAMA 1302.5.
   along with installation diagram of a 120" wide by 64" high Series C-700 aluminum casement window glazed with 3/16" annealed glass, prepared by Fenestration Testing Laboratory report No. **FTL-1535** dated January 13, 1997, signed and sealed by Gilbert Diamond, P.E.
6. Test report on: 1) Large Missile Impact Test, per SFBC, PA 201-94.
   2) Cyclic Wind Pressure Loading Test, per SFBC, PA 203-94.
   along with installation diagram of an XOX configuration 120" wide by 64" high Series C-700 aluminum casement window glazed with 3/16" annealed ***Sentryglas***, prepared by Fenestration Testing Laboratory report No. **FTL-1156** dated April 19, 1995, reissued October 3, 1995, signed and sealed by Yamil Kuri, P.E.

C. CALCULATIONS

1. Comparative Analysis prepared by PGT Engineering dated 9/21/01, signed and sealed by Robert Clark, P.E..
2. Comparative Analysis, dated 4/18/02 and revised on 7/29/02, signed and sealed by Robert Clark, P.E.

D. MATERIAL CERTIFICATIONS

1. Notice of Acceptance No. **96-0904.07** issued to E.I. DuPont DeNemours for "SentryGlas Series 457 Laminate Glass" dated 04/24/97, expiring on 04/24/00.

F. OTHER

1. Notice of Acceptance No. **02-0423.09**, issued to PGT Industries for their Series "C 700" Outswing Aluminum Casement Window-Impact, approved on 05/23/02 and expiring on 04/16/06.

Manuel Perez, P.E.
Product Control Examiner
NOA No 02-0806.05
Expiration Date: April 16, 2006
Approval Date: July 24, 2003

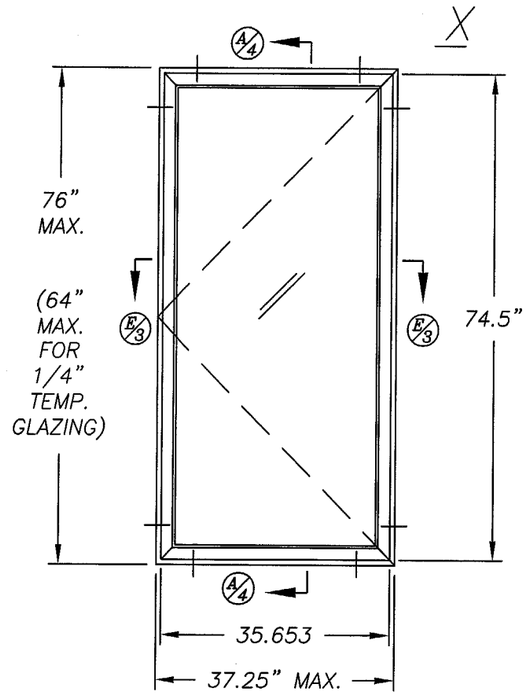

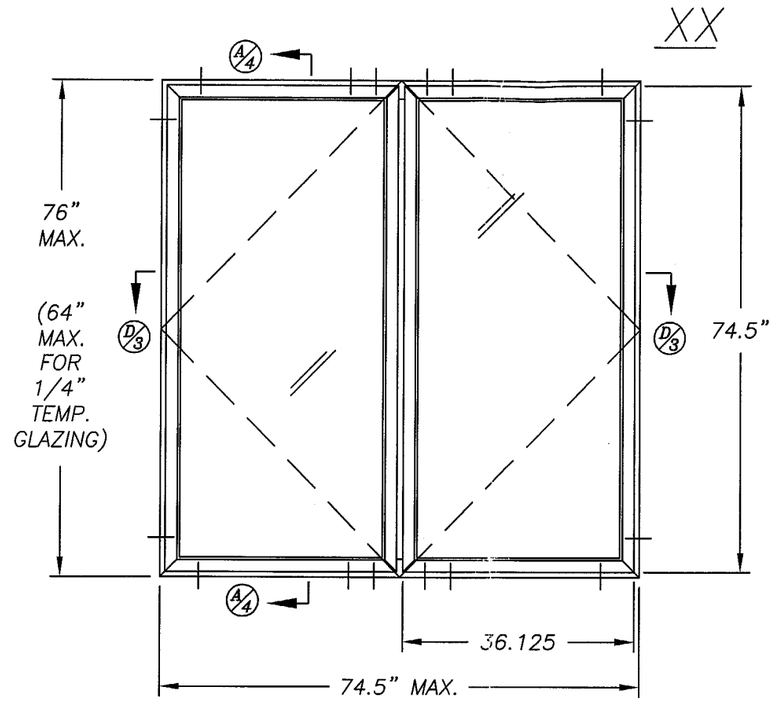

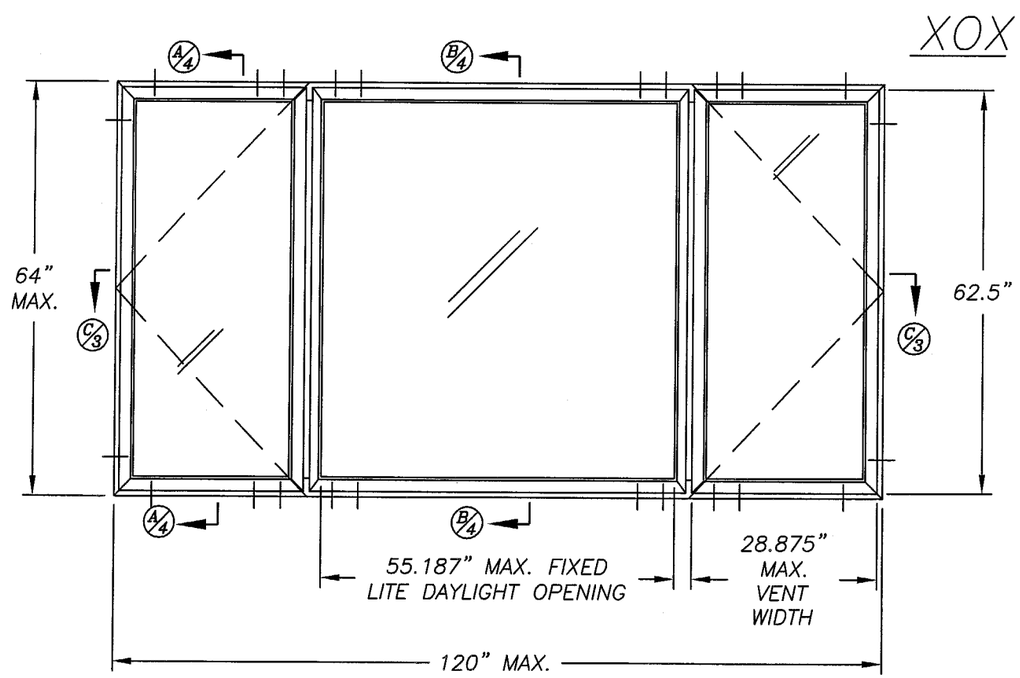

NON–IMPACT WINDOWS

(X AND XX CONFIGURATIONS)

1.) GLAZING: DSB, 3/16" ANNEALED, 3/16" HEAT–STRENGTHENED OR TEMPERED, 1/4" TEMPERED
2.) CONFIGURATIONS: X,XX
3.) DESIGN PRESSURE RATING:
SEE COMPARATIVE ANALYSIS TABLES ON SHEETS 5 & 6.
4.) ANCHORAGE:
MAX. 6" FROM EACH CORNER
XX CONFIG: 2 ANCHORS 4" APART, 4" FROM EACH MEETING RAIL
MAX. SPACING AT HEAD & SILL: 11.000
MAX. SPACING AT JAMBS: 16.000
5.) SHUTTER REQUIREMENT: MIAMI–DADE COUNTY APPROVED SHUTTERS ARE REQUIRED.
6.) REFERENCE TEST REPORTS: FTL–1518 & FTL–1519

NON–IMPACT WINDOWS

(XOX CONFIGURATION)

1.) GLAZING: 3/16" ANNEALED, 3/16" HEAT–STRENGTHENED OR TEMPERED, 1/4" TEMPERED
2.) CONFIGURATIONS: XOX
3.) DESIGN PRESSURE RATING:
SEE COMPARATIVE ANALYSIS TABLES ON SHEET 7
4.) ANCHORAGE:
MAX. 6" FROM EACH CORNER
2 ANCHORS 4" APART, 4" FROM EACH MEETING RAIL
MAX. SPACING AT HEAD & SILL: 11.000
MAX. SPACING AT JAMBS: 16.000
5.) SHUTTER REQUIREMENT: MIAMI–DADE COUNTY APPROVED SHUTTERS ARE REQUIRED.
6.) REFERENCE TEST REPORTS: FTL–1520 & FTL–1535

Revsd By:	Date:	Revisions:
F.K.	6/9/03	H–NO CHG THIS SHT
F.K.	7/26/02	G–NO CHG THIS SHT
L.T.	4/18/02	F–COMP. ANALYSIS
F.K.	9/7/01	E–COMP. ANALYSIS
Drawn By: R.S.	Date: 2/12/97	

PRODUCT REVISED
as complying with the Florida Buiding Code
Acceptance No. 02-0806.05
Expiration Date APRIL 16, 2006
By Manuel Perez
Miami-Dade Product Control Division

6/19/03

Robert L. Clark, P.E.
PE #39712
Structural

PGT INDUSTRIES

1070 TECHNOLOGY DRIVE
NOKOMIS, FL 34275

P.O. BOX 1529
NOKOMIS, FL 34274

Description: FRONT VIEWS, ELEVATION, NON–IMPACT

Title: ALUMINUM CASEMENT WINDOWS

Series/Model:	Scale:	Sheet:	Drawing No.	Rev:
C–700	NTS	1 of 9	330	H

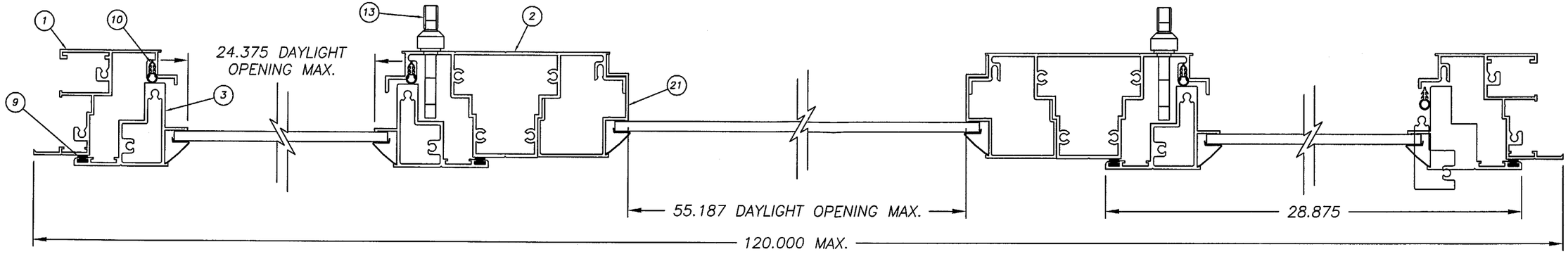

SECTION C–C

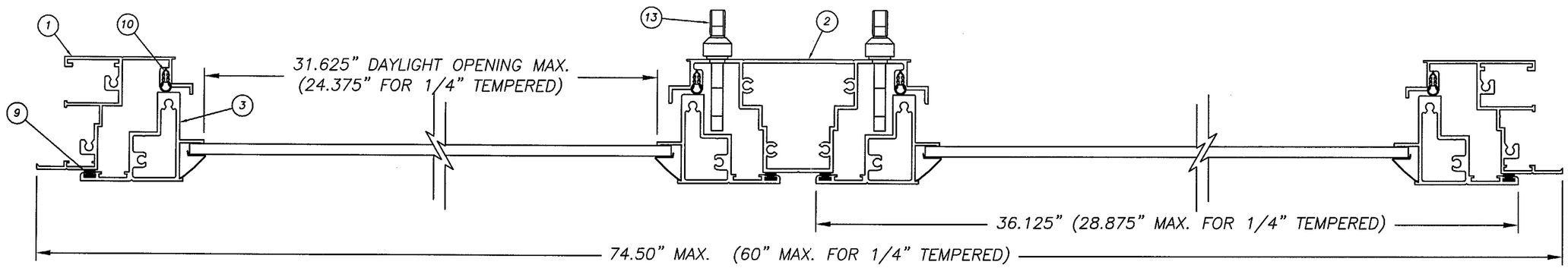

SECTION D–D

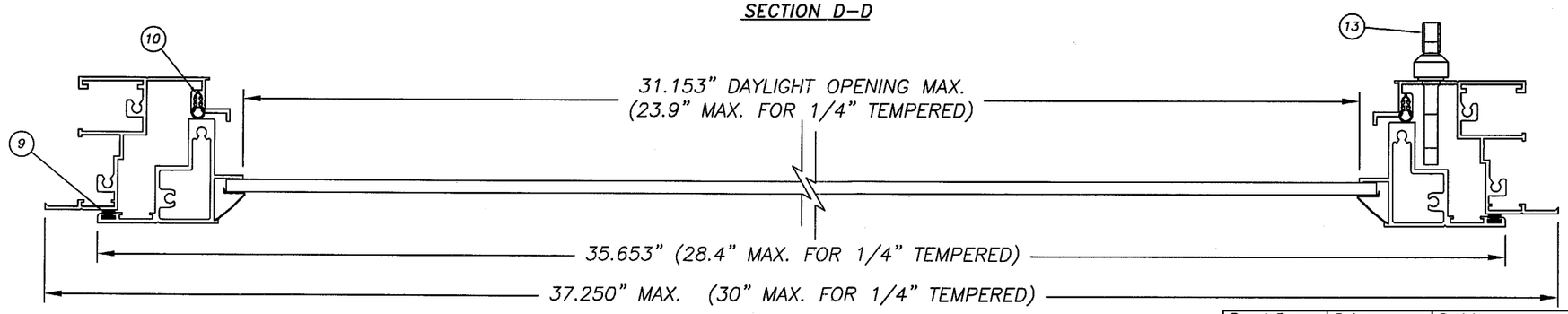

SECTION E–E

Revsd By:	Date:	Revisions:
F.K.	6/9/03	H–REMOVE 3/16 SG 457
F.K.	7/26/02	G–NO CHG THIS SHT
L.T.	4/18/02	F–COMP. ANALYSIS
F.K.	9/7/01	E–COMP. ANALYSIS
Drawn By: R.S.	Date: 2/12/97	

PRODUCT REVISED
as complying with the Florida
Buiding Code
Acceptance No 02-0806.05
Expiration Date APRIL 16, 2006
By Manuel Perez
Miami Dade Product Control
Division

REFERENCE TEST REPORTS:
FTL–1518, FTL–1519, FTL–1520 & FTL–1535

6/12/03

Robert L. Clark, P.E.
PE #39712
Structural

PGT INDUSTRIES

1070 TECHNOLOGY DRIVE
NOKOMIS, FL 34275

P.O. BOX 1529
NOKOMIS, FL 34274

Description: HORIZONTAL SECTIONS

Title: ALUMINUM CASEMENT WINDOWS

Series/Model:	Scale:	Sheet:	Drawing No.	Rev:
C–700	NTS	2 of 9	330	H

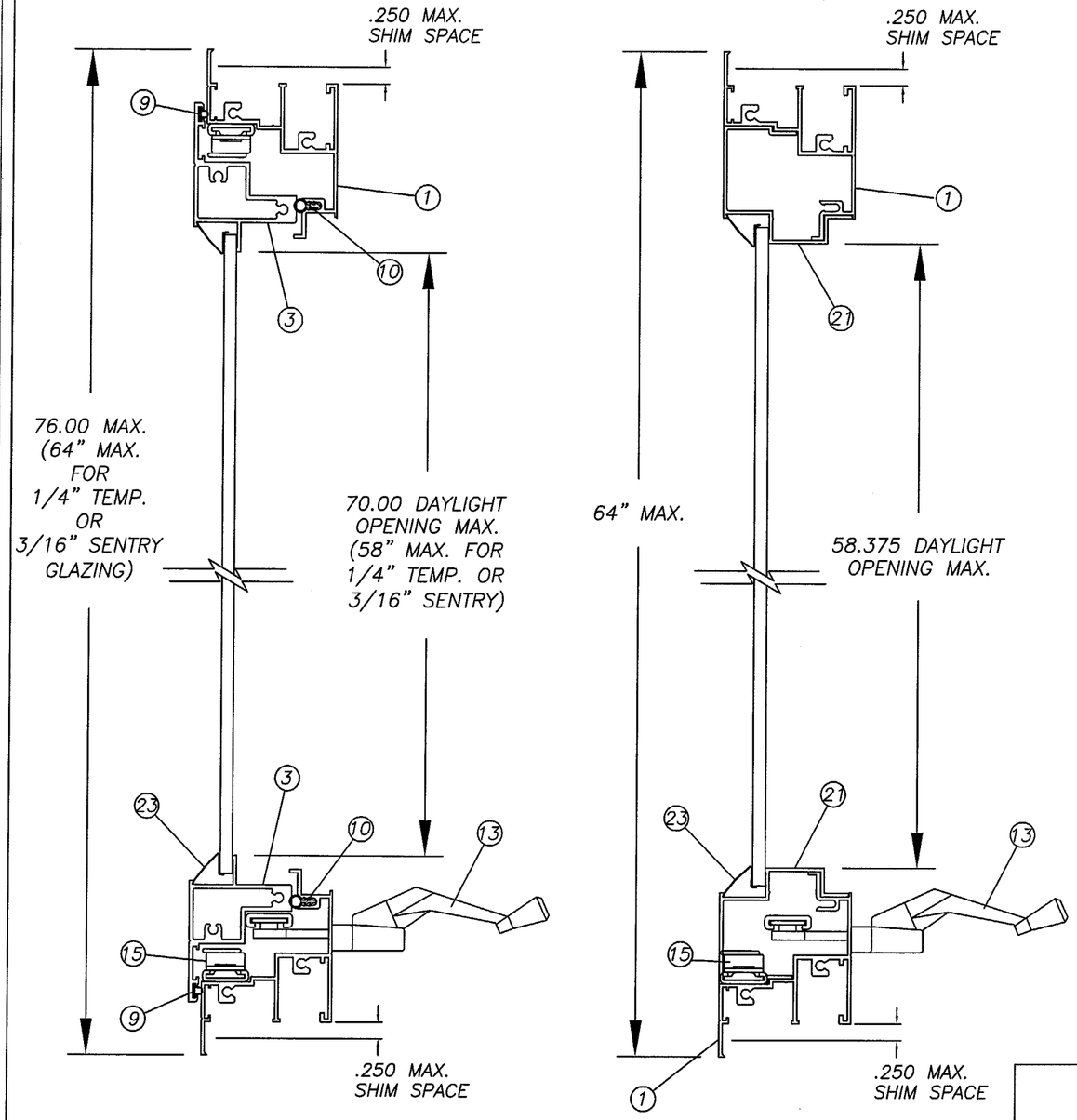

SECTION A–A

SECTION B–B

DSB GLAZING OPTION SHOWN

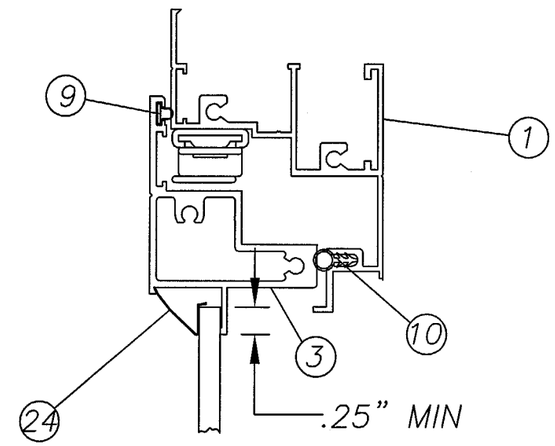

GLAZING OPTION: 3/16"

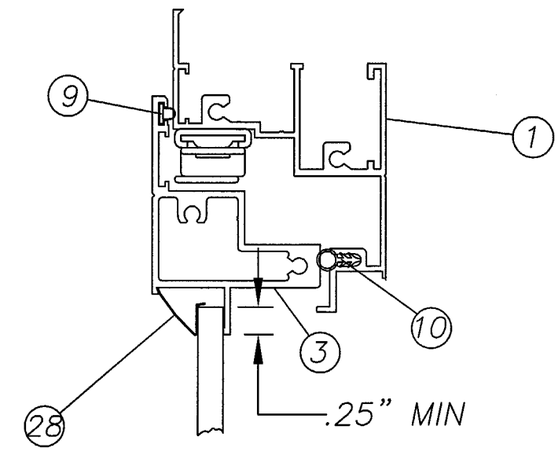

GLAZING OPTION: 1/4"

REFERENCE TEST REPORTS:
FTL–1518, FTL–1519, FTL–1520 & FTL–1535

6/19/03

Robert L. Clark, P.E.
PE #39712
Structural

PGT INDUSTRIES

1070 TECHNOLOGY DRIVE
NOKOMIS, FL 34275

P.O. BOX 1529
NOKOMIS, FL 34274

Revsd By:	Date:	Revisions:
F.K.	6/9/03	H–REMOVE SG 457
F.K.	7/26/02	G–NO CHG THIS SHT
L.T.	4/18/02	F–COMP. ANALYSIS
F.K.	9/7/01	E–COMP. ANALYSIS
Drawn By: R.S.	Date: 2/12/97	

PRODUCT REVISED
as complying with the Florida
Buiding Code
Acceptance No 02-0806.05
Expiration Date APRIL 16, 2006
By Manuel Serra
Miami Dade Product Control
Division

Description: VERTICAL SECTIONS

Title: ALUMINUM CASEMENT WINDOWS

Series/Model:	Scale:	Sheet:	Drawing No.	Rev:
C–700	NTS	3 of 9	330	H

COMPARATIVE ANALYSIS FOR: DSB GLASS CONFIGURATION: X FTL-1519

WINDOW WIDTH	WINDOW HEIGHT 26.000 (2) NEG	26.000 (2) POS	38.375 (3) NEG	38.375 (3) POS	50.625 (4) NEG	50.625 (4) POS	63.000 (5) NEG	63.000 (5) POS	76.000 (6) NEG	76.000 (6) POS
19.125 (2)	-75.0	75.0	-69.0	69.0	-56.7	56.7	-52.1	52.1	-49.2	49.2
20.000 (2)	-75.0	75.0	-64.2	64.2	-50.8	50.8	-46.8	46.8	-43.2	43.2
24.000 (3)	-75.0	75.0	-54.1	54.1	-38.3	38.3	-30.1	30.1	-27.5	27.5
26.500 (3)	-75.0	75.0	-51.6	51.6	-36.1	36.1	-26.7	26.7	-22.8	22.8
30.000 (4)	-62.8	62.8	-48.7	48.7	-34.3	34.3	-25.1	25.1	-19.7	19.7
32.000 (4)	-56.2	56.2	-46.7	46.7	-33.8	33.8	-25.4	25.4	-18.6	18.6
34.000 (4)	-50.8	50.8	-44.7	44.7	-33.4	33.4	-25.4	25.4	-18.5	18.5
36.000 (4)	-46.4	46.4	-42.8	42.8	-32.7	32.7	-25.0	25.0	-18.8	18.8
37.250 (4)	-44.0	44.0	-40.0	40.0	-31.8	31.8	-24.7	24.7	-18.9	18.9

COMPARATIVE ANALYSIS FOR: 3/16" HEAT STRENGTHENED GLASS CONFIGURATION: X FTL-1518

WINDOW WIDTH	WINDOW HEIGHT 26.000 (2) NEG	26.000 (2) POS	38.375 (3) NEG	38.375 (3) POS	50.625 (4) NEG	50.625 (4) POS	63.000 (5) NEG	63.000 (5) POS	76.000 (6) NEG	76.000 (6) POS
19.125 (2)	-135.0	104.0	-135.0	104.0	-135.0	104.0	-104.6	104.0	-84.1	84.1
20.000 (2)	-135.0	104.0	-135.0	104.0	-131.5	104.0	-100.8	100.8	-81.0	81.0
24.000 (3)	-120.4	104.0	-120.4	104.0	-115.3	104.0	-87.3	87.3	-69.6	69.6
26.500 (3)	-98.8	98.8	-98.8	98.8	-98.8	98.8	-81.1	81.1	-64.3	64.3
30.000 (4)	-78.5	78.5	-77.1	77.1	-77.1	77.1	-74.2	74.2	-58.4	58.4
32.000 (4)	-70.2	70.2	-67.8	67.8	-67.8	67.8	-67.8	67.8	-55.7	55.7
34.000 (4)	-63.5	63.5	-60.0	60.0	-60.0	60.0	-60.0	60.0	-53.3	53.3
36.000 (4)	-58.0	58.0	-53.5	53.5	-53.5	53.5	-53.5	53.5	-51.2	51.2
37.250 (4)	-55.0	55.0	-50.0	50.0	-50.0	50.0	-50.0	50.0	-50.0	50.0

COMPARATIVE ANALYSIS FOR: 3/16" ANNEALED GLASS CONFIGURATION: X FTL-1518

WINDOW WIDTH	WINDOW HEIGHT 26.000 (2) NEG	26.000 (2) POS	38.375 (3) NEG	38.375 (3) POS	50.625 (4) NEG	50.625 (4) POS	63.000 (5) NEG	63.000 (5) POS	76.000 (6) NEG	76.000 (6) POS
19.125 (2)	-120.0	104.0	-120.0	104.0	-120.0	104.0	-104.6	104.0	-84.1	84.1
20.000 (2)	-120.0	104.0	-120.0	104.0	-120.0	104.0	-100.8	100.8	-81.0	81.0
24.000 (3)	-120.0	104.0	-108.4	104.0	-83.4	83.4	-71.6	71.6	-66.6	66.6
26.500 (3)	-98.8	98.8	-92.7	92.7	-69.6	69.6	-57.9	57.9	-52.6	52.6
30.000 (4)	-78.5	78.5	-77.1	77.1	-58.9	58.9	-47.0	47.0	-40.5	40.5
32.000 (4)	-70.2	70.2	-67.8	67.8	-55.7	55.7	-43.1	43.1	-36.1	36.1
34.000 (4)	-63.5	63.5	-60.0	60.0	-53.2	53.2	-40.1	40.1	-33.2	33.2
36.000 (4)	-58.0	58.0	-53.5	53.5	-50.8	50.8	-39.1	39.1	-31.6	31.6
37.250 (4)	-55.0	55.0	-50.0	50.0	-49.9	49.9	-38.4	38.4	-30.7	30.7

COMPARATIVE ANALYSIS FOR: 1/4" TEMPERED GLASS CONFIGURATION: X FTL-1520

WINDOW WIDTH	WINDOW HEIGHT 26.000 (2) NEG	26.000 (2) POS	38.375 (2) NEG	38.375 (2) POS	50.625 (3) NEG	50.625 (3) POS	63.000 (4) NEG	63.000 (4) POS	64.000 (4) NEG	64.000 (4) POS
19.125 (2)	-135.0	75.3	-135.0	75.3	-132.3	75.3	-97.5	75.3	-95.5	75.3
20.000 (2)	-135.0	75.3	-135.0	75.3	-129.2	75.3	-94.7	75.3	-92.7	75.3
24.000 (3)	-117.2	75.3	-117.2	75.3	-117.2	75.3	-85.0	75.3	-83.1	75.3
26.500 (3)	-96.2	75.3	-96.1	75.3	-96.1	75.3	-80.9	75.3	-79.0	75.3
30.000 (3)	-76.4	75.3	-75.0	75.0	-75.0	75.0	-75.0	75.0	-75.0	75.0

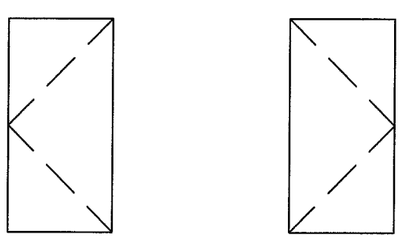

X OR X

NOTE: NUMBERS IN ( ) PARENTHESES ABOVE ARE MINIMUM QUANTITY OF ANCHORS PER SIDE.

Robert L. Clark, P.E.
PE #39712
Structural

PGT INDUSTRIES
1070 TECHNOLOGY DRIVE
NOKOMIS, FL 34275
P.O. BOX 1529
NOKOMIS, FL 34274

Revsd By:	Date:	Revisions:
F.K.	6/9/03	H–NO CHG THIS SHT
F.K.	7/26/02	G–NO CHG THIS SHT
L.T.	4/18/02	F–COMP. ANALYSIS
F.K.	9/7/01	E–COMP. ANALYSIS
Drawn By: R.S.	Date: 2/12/97	

PRODUCT REVISED
as complying with the Florida Building Code
Acceptance No. 02-0806.05
Expiration Date APRIL 16, 2006
By Manuel Perez
Miami Dade Product Control Division

Description: COMP. ANALYSIS – NON–IMPACT X

Title: ALUMINUM CASEMENT WINDOWS

Series/Model:	Scale:	Sheet:	Drawing No.	Rev:
C–700	NTS	4 of 9	330	H

COMPARATIVE ANALYSIS FOR: DSB GLASS CONFIGURATION: XX FTL-1519

WINDOW WIDTH	WINDOW HEIGHT 26.000 (2) NEG	26.000 (2) POS	38.375 (2) NEG	38.375 (2) POS	50.625 (3) NEG	50.625 (3) POS	63.000 (4) NEG	63.000 (4) POS	76.000 (5) NEG	76.000 (5) POS
37.000 (6)	-75.0	75.0	-72.9	72.9	-61.7	61.7	-56.8	56.8	-56.0	56.0
40.000 (6)	-75.0	75.0	-64.2	64.2	-50.8	50.8	-46.8	46.8	-43.2	43.2
42.000 (6)	-75.0	75.0	-59.9	59.9	-46.8	46.8	-41.3	41.3	-37.5	37.5
48.000 (6)	-75.0	75.0	-54.1	54.1	-38.3	38.3	-30.1	30.1	-27.5	27.5
50.000 (6)	-75.0	75.0	-52.9	52.9	-37.4	37.4	-28.2	28.2	-25.3	25.3
53.125 (8)	-75.0	75.0	-51.6	51.6	-36.1	36.1	-26.6	26.6	-22.7	22.7
60.000 (8)	-62.8	62.8	-48.7	48.7	-34.3	34.3	-25.1	25.1	-19.7	19.7
72.000 (10)	-46.4	46.4	-42.8	42.8	-32.7	32.7	-25.0	25.0	-18.8	18.8
74.500 (10)	-44.0	44.0	-40.0	40.0	-31.8	31.8	-24.7	24.7	-18.8	18.8

COMPARATIVE ANALYSIS FOR: 3/16" HEAT STRENGTHENED CONFIGURATION: XX FTL-1518

WINDOW WIDTH	WINDOW HEIGHT 26.000 (2) NEG	26.000 (2) POS	38.375 (2) NEG	38.375 (2) POS	50.625 (3) NEG	50.625 (3) POS	63.000 (4) NEG	63.000 (4) POS	76.000 (5) NEG	76.000 (5) POS
37.000 (6)	-135.0	104.0	-135.0	104.0	-135.0	104.0	-107.5	104.0	-86.5	86.5
40.000 (6)	-135.0	104.0	-135.0	104.0	-131.5	104.0	-100.8	100.8	-81.0	81.0
42.000 (6)	-135.0	104.0	-135.0	104.0	-126.8	104.0	-96.9	96.9	-77.7	77.7
48.000 (6)	-120.4	104.0	-120.4	104.0	-115.3	104.0	-87.3	87.3	-69.6	69.6
50.000 (6)	-111.0	104.0	-111.0	104.0	-111.0	104.0	-84.6	84.6	-67.3	67.3
53.125 (8)	-98.4	98.4	-98.3	98.3	-98.3	98.3	-80.9	80.9	-64.1	64.1
60.000 (8)	-78.5	78.5	-77.1	77.1	-77.1	77.1	-74.2	74.2	-58.4	58.4
72.000 (10)	-58.0	58.0	-53.5	53.5	-53.5	53.5	-53.5	53.5	-51.2	51.2
74.500 (10)	-55.0	55.0	-50.0	50.0	-50.0	50.0	-50.0	50.0	-50.0	50.0

COMPARATIVE ANALYSIS FOR: 3/16" ANNEALED GLASS CONFIGURATION: XX FTL-1518

WINDOW WIDTH	WINDOW HEIGHT 26.000 (2) NEG	26.000 (2) POS	38.375 (2) NEG	38.375 (2) POS	50.625 (3) NEG	50.625 (3) POS	63.000 (4) NEG	63.000 (4) POS	76.000 (5) NEG	76.000 (5) POS
37.000 (6)	-120.0	104.0	-120.0	104.0	-120.0	104.0	-107.5	104.0	-86.5	86.5
40.000 (6)	-120.0	104.0	-120.0	104.0	-120.0	104.0	-100.8	100.8	-81.0	81.0
42.000 (6)	-120.0	104.0	-120.0	104.0	-108.6	104.0	-96.9	96.9	-77.7	77.7
48.000 (6)	-120.0	104.0	-108.4	104.0	-83.4	83.4	-71.6	71.6	-66.6	66.6
50.000 (6)	-111.0	104.0	-101.6	101.6	-77.9	77.9	-65.4	65.4	-60.0	60.0
53.125 (8)	-98.4	98.4	-92.4	92.4	-69.3	69.3	-57.6	57.6	-52.3	52.3
60.000 (8)	-78.5	78.5	-77.1	77.1	-58.9	58.9	-47.0	47.0	-40.5	40.5
72.000 (10)	-58.0	58.0	-53.5	53.5	-50.8	50.8	-39.1	39.1	-31.6	31.6
74.500 (10)	-55.0	55.0	-50.0	50.0	-49.9	49.9	-38.4	38.4	-30.7	30.7

COMPARATIVE ANALYSIS FOR: 1/4" TEMPERED GLASS CONFIGURATION: XX FTL-1520

WINDOW WIDTH	WINDOW HEIGHT 26.000 (2) NEG	26.000 (2) POS	38.375 (2) NEG	38.375 (2) POS	50.625 (3) NEG	50.625 (3) POS	63.000 (4) NEG	63.000 (4) POS	64.000 (4) NEG	64.000 (4) POS
37.000 (6)	-135.0	75.3	-135.0	75.3	-134.7	75.3	-99.7	75.3	-97.6	75.3
40.000 (6)	-135.0	75.3	-135.0	75.3	-129.2	75.3	-94.7	75.3	-92.7	75.3
42.000 (6)	-135.0	75.3	-135.0	75.3	-126.1	75.3	-91.8	75.3	-89.9	75.3
48.000 (6)	-117.2	75.3	-117.2	75.3	-117.2	75.3	-85.0	75.3	-83.1	75.3
50.000 (6)	-108.0	75.3	-108.0	75.3	-108.0	75.3	-83.2	75.3	-81.3	75.3
53.125 (6)	-95.7	75.3	-95.7	75.3	-95.7	75.3	-80.8	75.3	-78.9	75.3
54.000 (6)	-92.7	75.3	-92.6	75.3	-92.6	75.3	-80.2	75.3	-78.3	75.3
60.000 (6)	-76.4	75.3	-75.0	75.0	-75.0	75.0	-75.0	75.0	-75.0	75.0

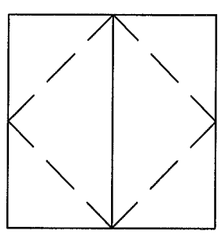

XX

NOTE: NUMBERS IN ( ) PARENTHESES ABOVE ARE MINIMUM QUANTITY OF ANCHORS PER SIDE.

6/19/03

Robert L. Clark, P.E.
PE #39712
Structural

PGT INDUSTRIES

1070 TECHNOLOGY DRIVE
NOKOMIS, FL 34275

P.O. BOX 1529
NOKOMIS, FL 34274

Revsd By:	Date:	Revisions:
F.K.	6/9/03	H–NO CHG THIS SHT
F.K.	7/26/02	G–NO CHG THIS SHT
L.T.	4/18/02	F–COMP. ANALYSIS
F.K.	9/7/01	E–COMP. ANALYSIS
Drawn By: R.S.	Date: 2/12/97	

PRODUCT REVISED
as complying with the Florida Buiding Code
Acceptance No 02-0806.05
Expiration Date APRIL 16, 2006
By Manuel Perez
Miami Dade Product Control Division

Description: COMP. ANALYSIS – NON–IMPACT XX

Title: ALUMINUM CASEMENT WINDOWS

Series/Model:	Scale:	Sheet:	Drawing No.	Rev:
C–700	NTS	5 of 9	330	H

COMPARATIVE ANALYSIS FOR: 3/16" ANNEALED GLASS CONFIGURATION: XOX FTL-1535

WINDOW WIDTH	WINDOW HEIGHT 26.000 (2) NEG	26.000 (2) POS	38.375 (2) NEG	38.375 (2) POS	50.625 (3) NEG	50.625 (3) POS	63.000 (4) NEG	63.000 (4) POS	64.000 (4) NEG	64.000 (4) POS
60.000 (10)	-120.0	104.0	-81.4	81.4	-58.9	58.9	-47.0	47.0	-46.3	46.3
72.000 (10)	-104.5	104.0	-69.2	69.2	-50.8	50.8	-39.1	39.1	-38.3	38.3
74.000 (10)	-101.0	101.0	-68.0	68.0	-50.1	50.1	-38.6	38.6	-37.7	37.7
84.000 (11)	-81.6	81.6	-60.3	60.3	-46.5	46.5	-36.9	36.9	-36.3	36.3
96.000 (11)	-62.5	62.5	-51.7	51.7	-43.0	43.0	-34.6	34.6	-34.0	34.0
106.375 (12)	-50.9	50.9	-46.2	46.2	-39.8	39.8	-32.4	32.4	-31.9	31.9
108.000 (12)	-49.5	49.5	-45.3	45.3	-39.1	39.1	-32.1	32.1	-31.6	31.6
111.000 (12)	-46.9	46.9	-43.8	43.8	-38.0	38.0	-31.5	31.5	-31.0	31.0
120.000 (13)	-40.7	40.7	-40.0	40.0	-35.2	35.2	-29.8	29.8	-29.3	29.3

COMPARATIVE ANALYSIS FOR: 3/16" HEAT STRENGTHENED GLASS CONFIGURATION: XOX FTL-1535

WINDOW WIDTH	WINDOW HEIGHT 26.000 (2) NEG	26.000 (2) POS	38.375 (2) NEG	38.375 (2) POS	50.625 (3) NEG	50.625 (3) POS	63.000 (4) NEG	63.000 (4) POS	64.000 (4) NEG	64.000 (4) POS
60.000 (10)	-135.0	104.0	-120.6	104.0	-81.8	81.8	-61.8	61.8	-60.6	60.6
72.000 (10)	-111.1	104.0	-111.1	104.0	-73.0	73.0	-54.2	54.2	-53.1	53.1
74.000 (10)	-105.2	104.0	-105.2	104.0	-71.9	71.9	-53.2	53.2	-52.1	52.1
84.000 (11)	-81.6	81.6	-81.6	81.6	-67.3	67.3	-49.0	49.0	-47.9	47.9
96.000 (11)	-62.5	62.5	-62.5	62.5	-62.5	62.5	-45.3	45.3	-44.3	44.3
106.375 (12)	-50.9	50.9	-50.9	50.9	-50.9	50.9	-43.1	43.1	-42.1	42.1
108.000 (12)	-49.5	49.5	-49.4	49.4	-49.4	49.4	-42.8	42.8	-41.8	41.8
111.000 (12)	-46.9	46.9	-46.7	46.7	-46.7	46.7	-42.3	42.3	-41.3	41.3
120.000 (13)	-40.7	40.7	-40.0	40.0	-40.0	40.0	-40.0	40.0	-40.0	40.0

COMPARATIVE ANALYSIS FOR: 1/4" TEMPERED GLASS CONFIGURATION: XOX FTL-1520

WINDOW WIDTH	WINDOW HEIGHT 26.000 (2) NEG	26.000 (2) POS	38.375 (2) NEG	38.375 (2) POS	50.625 (3) NEG	50.625 (3) POS	63.000 (4) NEG	63.000 (4) POS	64.000 (4) NEG	64.000 (4) POS
60.000 (10)	-135.0	75.3	-135.0	75.3	-135.0	75.3	-115.8	75.3	-113.6	75.3
72.000 (10)	-135.0	75.3	-135.0	75.3	-135.0	75.3	-101.6	75.3	-99.5	75.3
74.000 (10)	-135.0	75.3	-135.0	75.3	-134.7	75.3	-99.7	75.3	-97.6	75.3
84.000 (11)	-135.0	75.3	-135.0	75.3	-126.1	75.3	-91.8	75.3	-89.9	75.3
96.000 (11)	-117.2	75.3	-117.2	75.3	-117.2	75.3	-85.0	75.3	-83.1	75.3
106.375 (12)	-95.5	75.3	-95.4	75.3	-95.4	75.3	-80.8	75.3	-78.9	75.3
108.000 (12)	-92.7	75.3	-92.6	75.3	-92.6	75.3	-80.2	75.3	-78.3	75.3
111.000 (12)	-88.0	75.3	-87.7	75.3	-87.7	75.3	-79.3	75.3	-77.4	75.3
120.000 (13)	-76.4	75.3	-75.0	75.0	-75.0	75.0	-75.0	75.0	-75.0	75.0

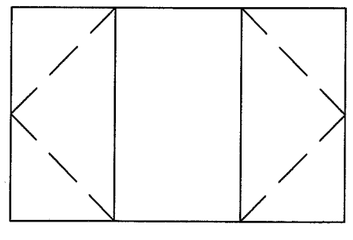

XOX

NOTE: NUMBERS IN ( ) PARENTHESES ABOVE ARE MINIMUM QUANTITY OF ANCHORS PER SIDE.

6/19/03

Robert L. Clark, P.E.
PE #39712
Structural

PGT INDUSTRIES

1070 TECHNOLOGY DRIVE
NOKOMIS, FL 34275

P.O. BOX 1529
NOKOMIS, FL 34274

Revsd By:	Date:	Revisions:
F.K.	6/9/03	H–NO CHG THIS SHT
F.K.	7/26/02	G–NO CHG THIS SHT
L.T.	4/18/02	F–COMP. ANALYSIS
F.K.	9/7/01	E–COMP. ANALYSIS
Drawn By: R.S.	Date: 2/12/97	

PRODUCT REVISED
as complying with the Florida Buiding Code
Acceptance No 02-0806.05
Expiration Date APRIL 16, 2006
By Manuel Perez
Miami Dade Product Control Division

Description: COMP. ANALYSIS – NON–IMPACT XOX

Title: ALUMINUM CASEMENT WINDOWS

Series/Model:	Scale:	Sheet:	Drawing No.	Rev:
C–700	NTS	6 of 9	330	H

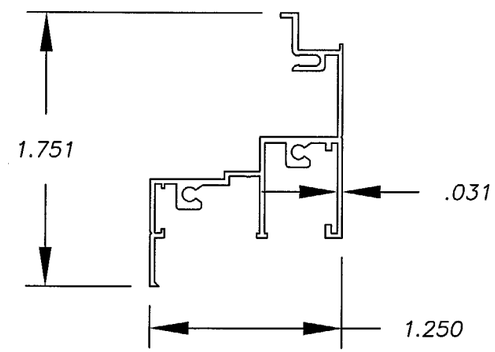

1 ALUM. 6063–T5

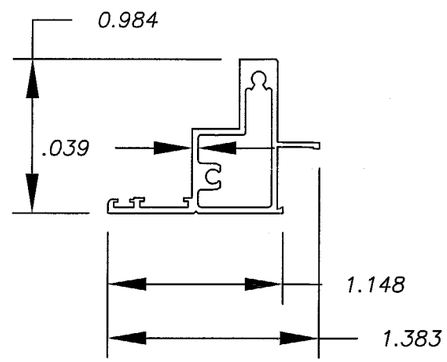

3 ALUM. 6063–T5

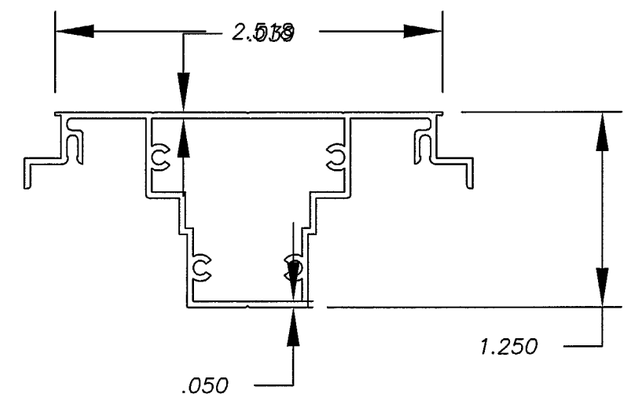

2 ALUM. 6063–T5

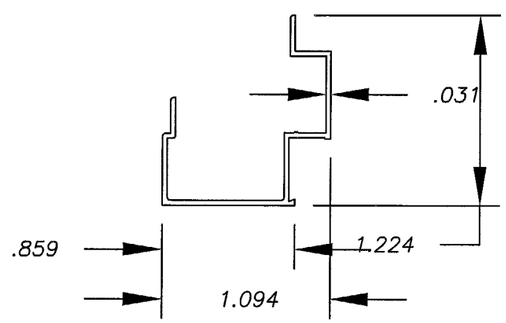

21 ALUM. 6063–T5

REFERENCE TEST REPORTS:
FTL–1518, FTL–1519, FTL–1520 & FTL–1535

Revsd By:	Date:	Revisions:
F.K.	6/9/03	H–NO CHG THIS SHT
F.K.	7/26/02	G–NO CHG THIS SHT
L.T.	4/18/02	F–COMP. ANALYSIS
F.K.	9/7/01	E–COMP. ANALYSIS
Drawn By: R.S.	Date: 2/12/97	

PRODUCT REVISED
as complying with the Florida Buiding Code
Acceptance No 02-0806.05
Expiration Date APRIL 16, 2006
By Miami Dade Product Control Division

6/19/03

Robert L. Clark, P.E.
PE #39712
Structural

PGT INDUSTRIES

1070 TECHNOLOGY DRIVE
NOKOMIS, FL 34275

P.O. BOX 1529
NOKOMIS, FL 34274

Description: EXTRUSIONS

Title: ALUMINUM CASEMENT WINDOWS

Series/Model:	Scale:	Sheet:	Drawing No.	Rev:
C–700	NTS	7 of 9	330	H

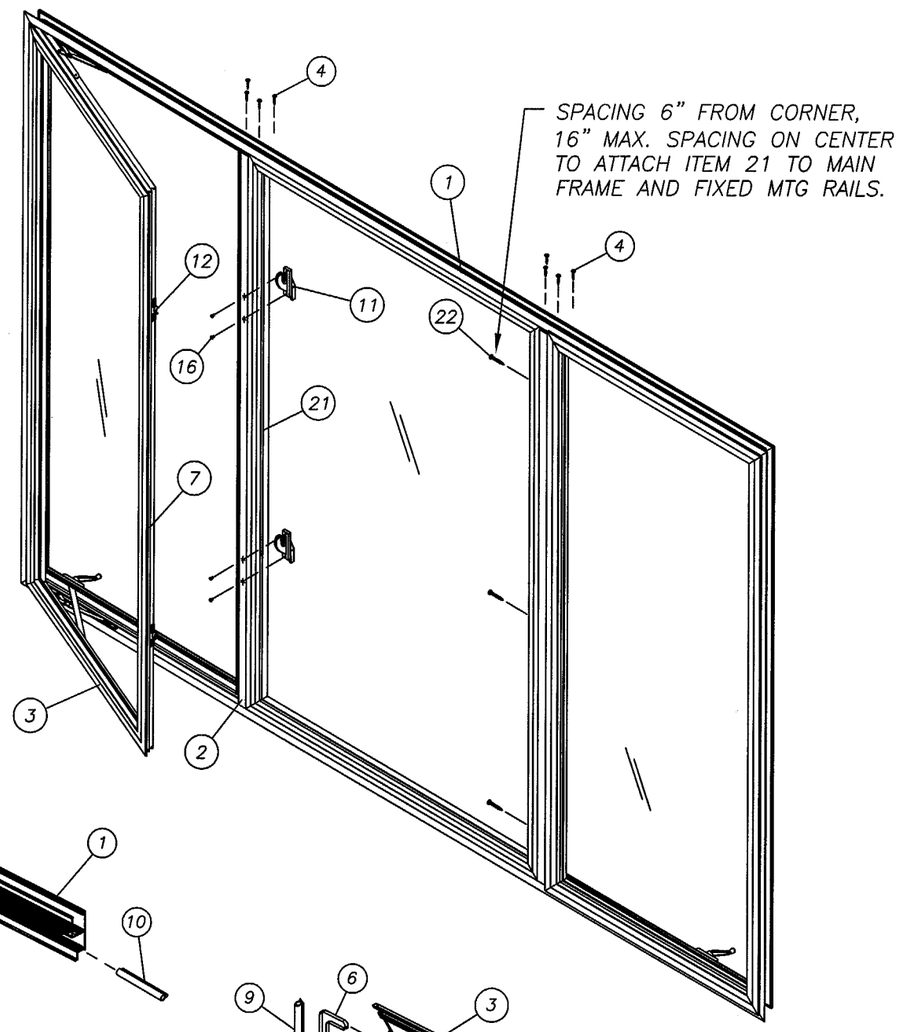

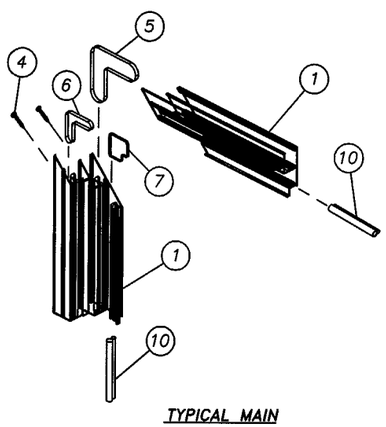

TYPICAL MAIN FRAME CORNER

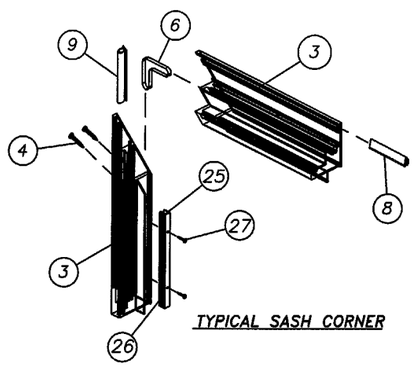

TYPICAL SASH CORNER

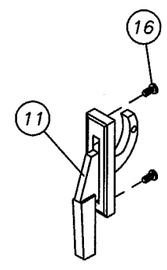

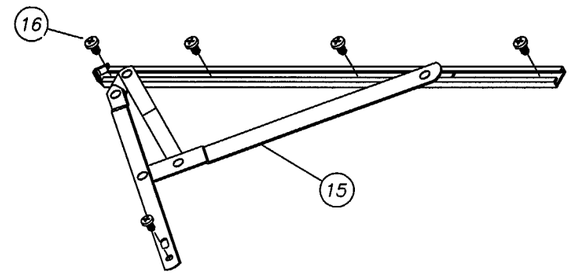

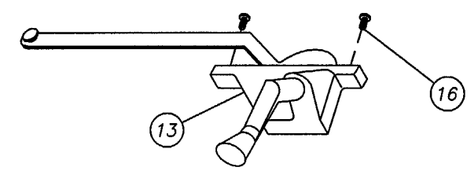

ITEM	VT #	DESCRIPTION	VENDOR	VENDOR #
1	610228	FRAME HEAD, SILL, JAMB	ALUMAX EXTRUSIONS	AF-10228
2	69999	FRAME MEETING RAIL	ALUMAX EXTRUSIONS	AF-9999
3	69514	SASH HEAD, SILL, JAMB	ALUMAX EXTRUSIONS	AF-9514
4	781PQA	8x1 1/2 SCREW PAN HD. QUAD.	FASTEC INDUSTRIAL CORP.	
5	7CORNMLG	LG. MAIN FRM. CORNER KEY	PRECISION FABRICATION	
6	7CORNMSM	SM. MAIN FRM/SASH CORNER KEY	PRECISION FABRICATION	
7	4CORNN	PLASTIC MAIN FRM. CORNER KEY	VINYL-TECH. / PGT	4CORNN
8	6Q200K	SASH HEADER WEATHER STRIP	SCHLEGEL CORP.	Q200x190
9	6Q150K	SASH SIDE/SILL WEATHER STRIP	SCHLEGEL CORP.	Q150x190
10	6FRMBK	MAIN FRAME BULB WEATHER STRIP	PROTOTYPE PLASTICS	FP-176 BLACK
11	49004	SASH LOCK	VINYL-TECH. / PGT	315
12	7KEEP	SASH LOCK KEEPER	TRUTH HARDWARE	208000
13	7CAOR/L	CASEMENT OPER. RT/LEFT	TRUTH HARDWARE	23-19-23-002
14	7TRAK	OPERATOR GUIDE TRACK	TRUTH HARDWARE	30175
15	7CEHG	STANDARD HINGE	TRUTH HARDWARE	35.10.00.101
16	710516PPA	10x5/16 SCREW PAN HD. PHIL	MERCHANTS FASTENER CORP.	
17		3/16" ANNEALED GLASS	PPG, LOF	
19		1/4" TEMP. GLASS	PPG, LOF	
20		DSB GLASS	PPG, LOF	
21	610001	FIXED LIGHT INSERT	ALUMAX EXTRUSIONS	AF-10001
22	76178A	6x1 7/8 SCREW BUGLE TEC	AQUA FASTENERS	
23	65107W	DSB ROLLED ALUM. GLAZING BEAD	FLORIDA SCREEN	SH05-107
24	6503W	3/16"ROLLED ALUM. GLAZING BEAD	FLORIDA SCREEN	SH05-030
25	60118W	EXTR'D. ALUM. GLAZING BEAD	INDALEX EXTRUSIONS	GAS-43222
26	601308K	FOAM TAPE ADHESIVE 1-SIDE	FRANK LOWE	
27	7PWSW	#6x7/8 FLT. HD. PHIL.	FASTEC INDUSTRIES	
28	65133	1/4" ROLLED ALUM. GLAZING BEAD	FLORIDA SCREEN	

REFERENCE TEST REPORTS:
FTL-1518, FTL-1519, FTL-1520 & FTL-1535

4/18/03

Robert L. Clark, P.E.
PE #39712
Structural

PGT INDUSTRIES

1070 TECHNOLOGY DRIVE
NOKOMIS, FL 34275

P.O. BOX 1529
NOKOMIS, FL 34274

Revsd By:	Date:	Revisions:
F.K.	6/9/03	H-REMOVE SG 457
F.K.	7/26/02	G-NO CHG THIS SHT
L.T.	4/18/02	F-COMP. ANALYSIS
F.K.	9/7/01	E-COMP. ANALYSIS
Drawn By: R.S.	Date: 2/12/97	

PRODUCT REVISED
as complying with the Florida Buiding Code
Acceptance No. 02-0806.05
Expiration Date APRIL 16, 2006
By Manuel Perez
Miami-Dade Product Control Division

Description: FRONT VIEWS, ELEVATION

Title: ALUMINUM CASEMENT WINDOWS

Series/Model:	Scale:	Sheet:	Drawing No.	Rev:
C-700	NTS	8 of 9	330	H

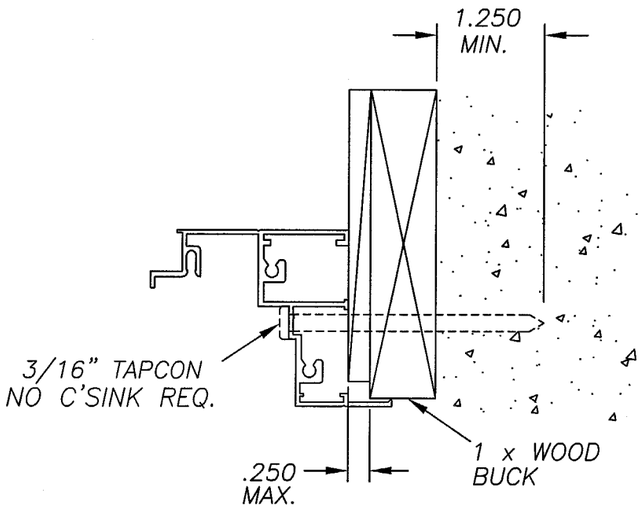

TYP. HEAD, SILL JAMB

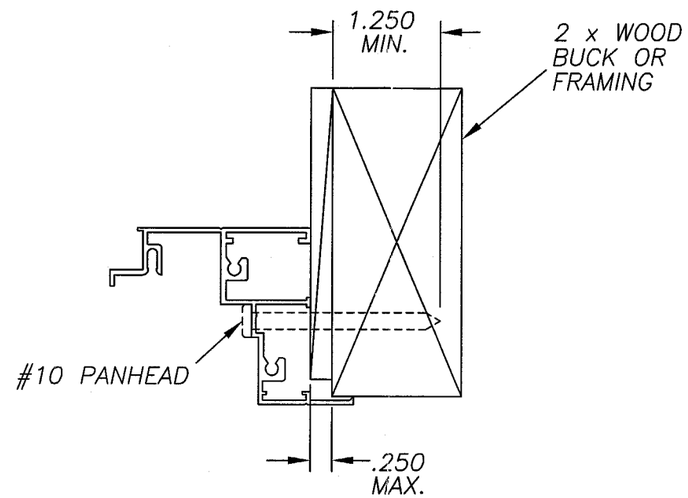

TYP. HEAD, SILL JAMB

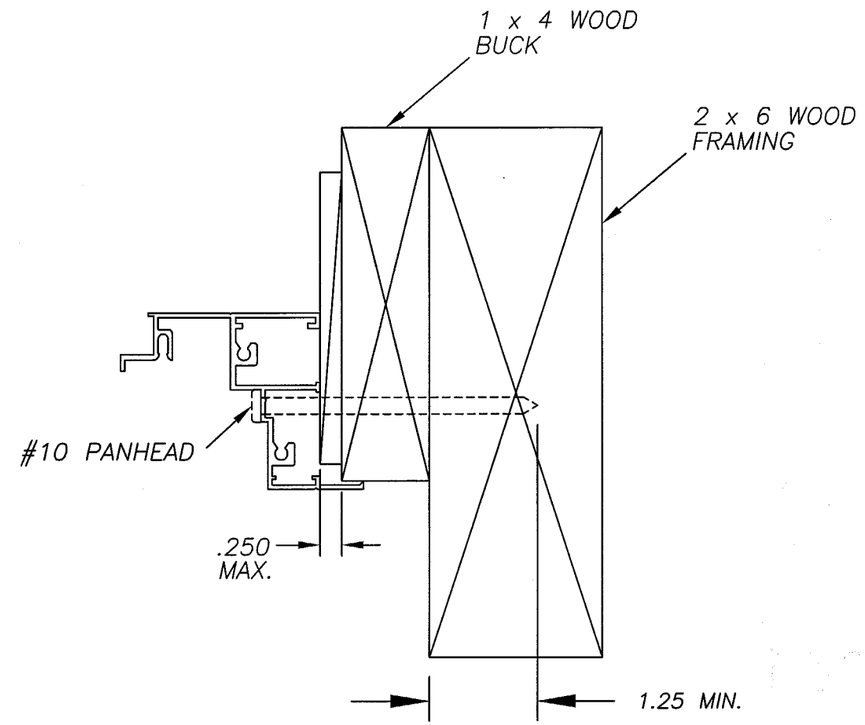

TYP. HEAD, SILL JAMB

Revsd By:	Date:	Revisions:
F.K.	6/9/03	H–NO CHG THIS SHT
F.K.	7/26/02	G–NO CHG THIS SHT
L.T.	4/18/02	F–COMP. ANALYSIS
F.K.	9/7/01	E–COMP. ANALYSIS
Drawn By: R.S.	Date: 2/12/97	

PRODUCT REVISED
as complying with the Florida
Buiding Code
Acceptance No 02-0806.05
Expiration Date APRIL 16, 2006
By [signature]
Miami Dade Product Control
Division

6/18/03

Robert L. Clark, P.E.
PE #39712
Structural

PGT INDUSTRIES

1070 TECHNOLOGY DRIVE
NOKOMIS, FL 34275

P.O. BOX 1529
NOKOMIS, FL 34274

Description:
XOX CONFIGURATION AND B.O.M.

Title:
ALUMINUM CASEMENT WINDOWS

Series/Model:	Scale:	Sheet:	Drawing No.	Rev:
C–700	NTS	9 of 9	330	H