MIAMI-DADE

BUILDING CODE COMPLIANCE OFFICE (BCCO)
PRODUCT CONTROL DIVISION

MIAMI-DADE COUNTY, FLORIDA
METRO-DADE FLAGLER BUILDING
140 WEST FLAGLER STREET, SUITE 1603
MIAMI, FLORIDA 33130-1563
(305) 375-2901 FAX (305) 375-2908

NOTICE OF ACCEPTANCE (NOA)

PGT Industries
1070 Technology Drive
Nokomis, FL 34275

SCOPE:
This NOA is being issued under the applicable rules and regulations governing the use of construction materials. The documentation submitted has been reviewed by Miami-Dade County Product Control Division and accepted by the Board of Rules and Appeals (BORA) to be used in Miami Dade County and other areas where allowed by the Authority Having Jurisdiction (AHJ).

This NOA shall not be valid after the expiration date stated below. The Miami-Dade County Product Control Division (In Miami Dade County) and/or the AHJ (in areas other than Miami Dade County) reserve the right to have this product or material tested for quality assurance purposes. If this product or material fails to perform in the accepted manner, the manufacturer will incur the expense of such testing and the AHJ may immediately revoke, modify, or suspend the use of such product or material within their jurisdiction. BORA reserves the right to revoke this acceptance, if it is determined by Miami-Dade County Product Control Division that this product or material fails to meet the requirements of the applicable building code.

This product is approved as described herein, and has been designed to comply with the High Velocity Hurricane Zone of the Florida Building Code.

DESCRIPTION: Series "SGD-830" Aluminum Sliding Glass Door

APPROVAL DOCUMENT: Drawing No. **4392-3,** titled "Mid-Rise Alum. Sliding Glass Door", sheets 1 through 10 of 10, dated 7/30/02 with revision B dated 1/27/03, prepared by manufacturer, signed and sealed by Robert L. Clark, P.E., bearing the Miami-Dade County Product Control Approval stamp with the Notice of Acceptance number and approval date by the Miami-Dade County Product Control Division.

MISSILE IMPACT RATING: None

LABELING: Each unit shall bear a permanent label with the manufacturer's name or logo, city, state and following statement: "Miami-Dade County Product Control Approved", unless otherwise noted herein.

RENEWAL of this NOA shall be considered after a renewal application has been filed and there has been no change in the applicable building code negatively affecting the performance of this product.

TERMINATION of this NOA will occur after the expiration date or if there has been a revision or change in the materials, use, and/or manufacture of the product or process. Misuse of this NOA as an endorsement of any product, for sales, advertising or any other purposes shall automatically terminate this NOA. Failure to comply with any section of this NOA shall be cause for termination and removal of NOA.

ADVERTISEMENT: The NOA number preceded by the words Miami-Dade County, Florida, and followed by the expiration date may be displayed in advertising literature. If any portion of the NOA is displayed, then it shall be done in its entirety.

INSPECTION: A copy of this entire NOA shall be provided to the user by the manufacturer or its distributors and shall be available for inspection at the job site at the request of the Building Official.
This NOA consists of this page 1 as well as approval document mentioned above.
The submitted documentation was reviewed by **Manuel Perez, P.E.**

PRODUCT CONTROL ACCEPTED

PGT Industries

NOTICE OF ACCEPTANCE: EVIDENCE SUBMITTED
(For File ONLY. Not part of NOA)

A. DRAWINGS

1. Manufacturer's die drawings and sections.
2. Drawing No **4392-3,** titled "Mid-Rise Alum. Sliding Glass Door", sheets 1 through 10 of 10, dated 7/30/02 with revision B dated 1/27/03, prepared by manufacturer, signed and sealed by Robert L. Clark, P.E.

B. TESTS

1. Test reports on 1) Air Infiltration Test, per SFBC, PA 202-94
   2) Uniform Static Air Pressure Test, Loading per SFBC,PA 202-94
   3) Water Resistance Test, per SFBC, PA 202-94
   4) Forced Entry Test, per SFBC 3603.2 (b) and PA 202-94
   along with marked-up drawings and installation diagram of one specimen of an aluminum sliding glass door w/ 3/8" temp. glass, prepared by Fenestration Testing Laboratory, Inc. Test Report No. **FTL-3510**, dated 7/18/02, signed and sealed by James G. Worth, P.E.
2. Test reports on 1)Uniform Static Air Pressure Test, Loading per SFBC,PA 202-94 along with marked-up drawings and installation diagram of one specimen of an aluminum sliding glass door w/ ¼" temp. glass, prepared by Fenestration Testing Laboratory, Inc. Test Report No. **FTL-3509**, dated 7/18/02, signed and sealed by James G. Worth, P.E.
3. Test reports on 1)Uniform Static Air Pressure Test, Loading per SFBC,PA 202-94 along with marked-up drawings and installation diagram of one specimen of an aluminum sliding glass door w/ 3/16" temp glass, prepared by Fenestration Testing Laboratory, Inc. Test Report No. **FTL-3508**, dated 7/18/02, signed and sealed by James G. Worth, P.E.
4. Test reports on 1) Air Infiltration Test, per FBC, TAS 202-94
   2) Uniform Static Air Pressure Test, Loading per FBC TAS 202-94
   3) Water Resistance Test, per FBC, TAS 202-94
   4) Small Missile Impact Test per FBC, TAS 201-94
   5) Cyclic Wind Pressure Loading per FBC, TAS 203-94
   6) Forced Entry Test, per FBC 3603.2 (b) and TAS 202-94
   along with marked-up drawings and installation diagram of three specimens of an aluminum sliding glass door w/ two 3/16" tempered lites w/.090" Dupont Butacite PVB laminated glass, prepared by Fenestration Testing Laboratory, Inc., Test Report No. **FTL-3512**, dated 7/16/02, signed and sealed by James G. Worth, P.E. ***(For reference of full 202 only)***

Manuel Perez

Manuel Perez, P.E.
Product Control Examiner
NOA No 02-0828.13
Expiration Date: March 13, 2008
Approval Date: March 13, 2003

PGT Industries

NOTICE OF ACCEPTANCE: EVIDENCE SUBMITTED
(For File ONLY. Not part of NOA)

C. CALCULATIONS

1. Anchor Calculations and structural analysis, prepared by Robert L. Clark, P.E., dated 8/23/02, signed and sealed by Robert L. Clark, P.E.

D. MATERIAL CERTIFICATIONS

1. None.

E. STATEMENTS

1. Statement letter of conformance, dated 8/21/02, signed and sealed by Robert L. Clark, P.E.
2. Statement letter of no financial interest, dated 8/20/02, signed and sealed by Robert L. Clark, P.E.
3. Laboratory compliance letters for Test Reports No. **FTL 3508, FTL 3509 and FTL 3510** issued by Fenestration Testing Laboratory, Inc. dated 7/30/02, signed and sealed by James G. Worth, P.E.

F. OTHER

1. None.

Manuel Perez, P.E.
Product Control Examiner
NOA No 02-0828.13
Expiration Date: March 13, 2008
Approval Date: March 13, 2003

NON-IMPACT SLIDING GLASS DOOR

1. GLAZING OPTIONS:
   A. 3/16" TEMPERED GLASS
   B. 1/4" TEMPERED GLASS
   C. 3/8" TEMPERED GLASS
2. CONFIGURATION: OX, XO, OXO, OXXO
3. DESIGN PRESSURE RATING:
   (SEE TABLES ON SHEETS 2, 3, & 4)
4. ANCHORAGE: DOUBLE ROW OF 1/4" TAPCONS AS FOLLOWS & PER SHEET 10. 3/16" TAPCONS & #12 SCREWS REQUIRE ADDITIONAL FASTENERS.
   HEAD & SILL:
   MAX. 6" FROM CORNERS
   CENTERLINE OF EA. INTERLOCK & ASTRAGAL
   MAX. 4" EA. SIDE OF INTERLOCK & ASTRAGAL
   (WHEN USING 3/16" TAPCONS OR #12 SCREWS WITH GLASS OPTION C. ONLY, (2) ADDITIONAL FASTENERS ARE REQUIRED 8" ON EACH SIDE OF ASTRAGAL CENTERLINE, OXO & OXXO ONLY)
   MAX. 15" O.C.
   JAMBS:
   MAX. 6" FROM CORNERS
   MAX. 20" O.C.
5. MIAMI-DADE COUNTY APPROVED SHUTTERS ARE REQUIRED IN MIAMI-DADE COUNTY AND WHERE IMPACT RESISTANCE IS REQUIRED.
6. REF. TEST REPORTS: FTL-3508, FTL-3509 & FTL-3510

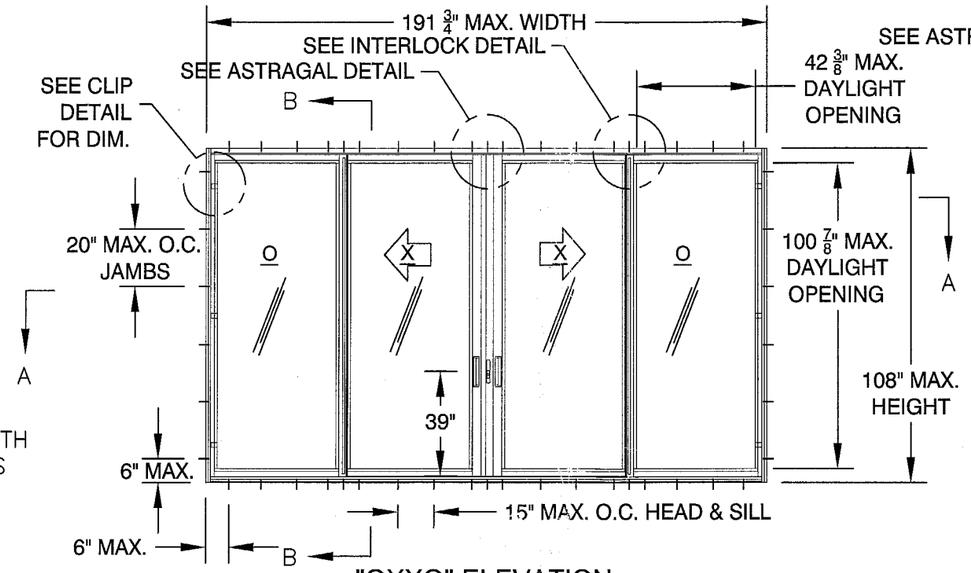

"OXXO" ELEVATION

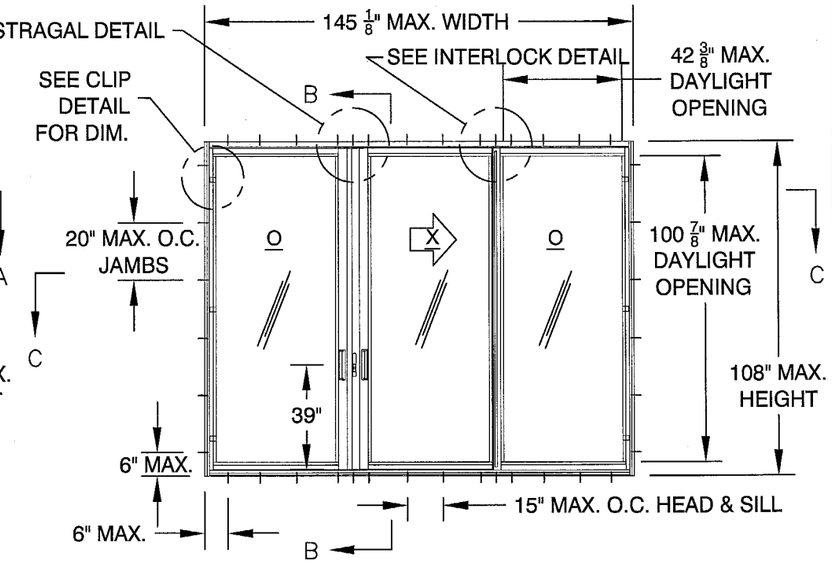

"OXO" ELEVATION

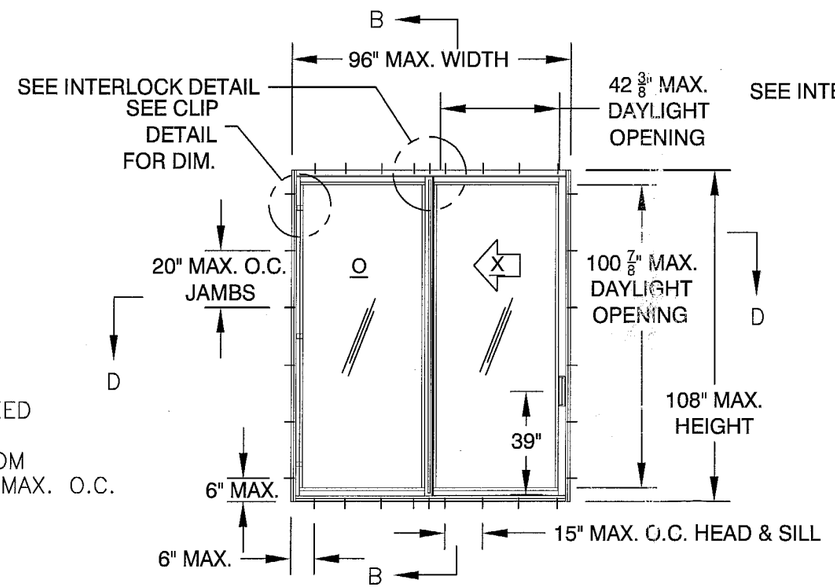

"OX" ELEVATION

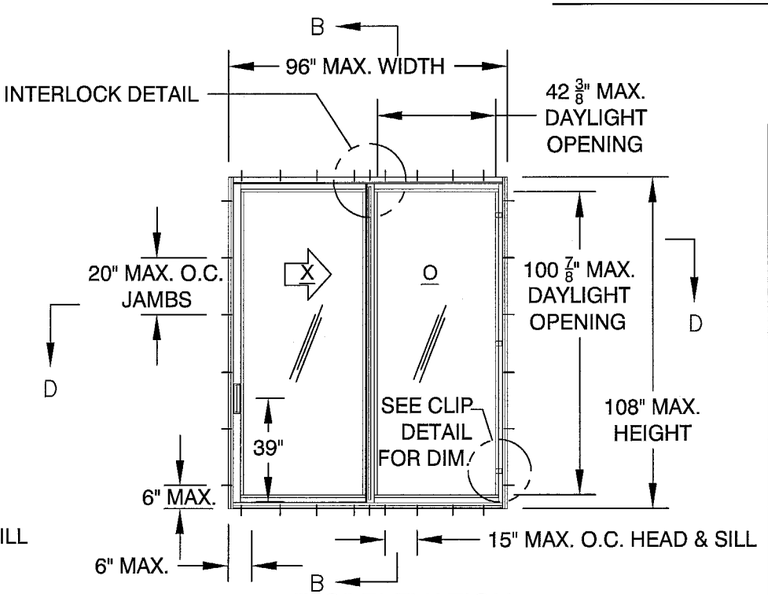

"XO" ELEVATION

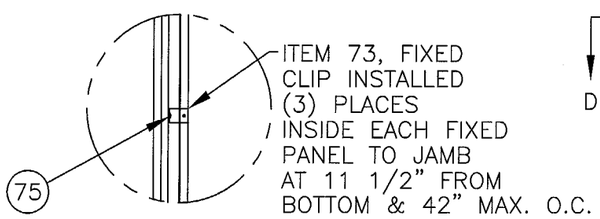

FIXED CLIP DETAIL

NOA DRAWING TABLE OF CONTENTS

	SHEET
NOTES	1
ELEVATIONS	1
DESIGN PRESSURES	2-4
SECTIONS	5-6
GLAZING DETAILS	7
PARTS LIST	7
EXTRUSIONS	8-9
CORNER ASSEMBLY	9
ANCHORAGE	10

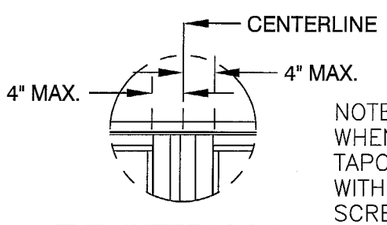

TYP. INTERLOCK & ASTRAGAL ANCHORAGE DETAIL

NOTE: TYPICAL PATTERN WHEN ANCHORING WITH 1/4" TAPCONS. WHEN ANCHORING WITH 3/16" TAPCONS OR #12 SCREWS, FIELD INSTALL (2) ADDITIONAL FASTENERS AT 8" ON EACH SIDE OF ASTRAGAL CENTERLINE (OXO & OXXO ONLY).

Robert L. Clark
1/27/03

Robert L. Clark, P.E.
PE #39712
Structural

PGT INDUSTRIES

1070 TECHNOLOGY DRIVE
NOKOMIS, FL 34275

P.O. BOX 1529
NOKOMIS, FL 34274

Revsd By:	Date:	Revisions:
F.K.	1/27/03	B-NO CHG THIS SHT
F.K.	01/02/03	A-REDRAW ELEVATIONS
Drawn By: F.K.	Date: 07/30/02	

Approved as complying with the Florida Building Code
Date MARCH 13, 2003
NOA# 02-0828.13
Miami Dade Product Control Division
By Manuel Perez

Description: ELEVATIONS & NOTES (NON-IMPACT)

Title: MID-RISE ALUM. SLIDING GLASS DOOR

Series/Model:	Scale:	Sheet:	Drawing No.	Rev:
SGD-830	NTS	1 of 10	4392-3	B

COMPARATIVE ANALYSIS-TABLE 1. ("OXXO" W/ 1/4" TAPCONS)

GLASS TYPE & TEST NO.: A. 3/16" TEMPERED (TEST FTL-3508) B. 1/4" TEMPERED (TEST FTL-3509) C. 3/8" TEMPERED (TEST FTL-3510) SEE NOTE 4.

WIDTHS [ ] PANEL DOOR		DOOR HEIGHT 80.000 NEG	80.000 POS	88.000 NEG	88.000 POS	96.000 NEG	96.000 POS	100.000 NEG	100.000 POS	104.000 NEG	104.000 POS	108.000 NEG	108.000 POS
[27"] 108.000	A.	-178.2	90.0	-160.2	90.0	-144.7	90.0	-138.0	90.0	-131.9	90.0	-126.3	90.0
	B.	-210.0	90.0	-204.3	90.0	-184.5	90.0	-175.9	90.0	-168.2	90.0	-161.0	90.0
	C.	-210.0	90.0	-210.0	90.0	-210.0	90.0	-210.0	90.0	-210.0	90.0	-210.0	90.0
[30"] 119.750	A.	-145.8	90.0	-141.5	90.0	-132.8	90.0	-126.6	90.0	-120.9	90.0	-115.7	90.0
	B.	-210.0	90.0	-187.9	90.0	-169.4	90.0	-161.4	90.0	-154.2	90.0	-147.5	90.0
	C.	-210.0	90.0	-210.0	90.0	-210.0	90.0	-210.0	90.0	-210.0	90.0	-202.5	90.0
[36"] 143.750	A.	-117.3	90.0	-105.1	90.0	-96.7	90.0	-92.0	90.0	-88.0	88.0	-87.2	87.2
	B.	-157.3	90.0	-143.1	90.0	-135.7	90.0	-131.6	90.0	-129.3	90.0	-127.0	90.0
	C.	-210.0	90.0	-210.0	90.0	-201.1	90.0	-191.3	90.0	-182.4	90.0	-174.3	90.0
[39"] 156.000	A.	-112.5	90.0	-99.3	90.0	-86.3	86.3	-83.1	83.1	-80.4	80.4	-77.7	77.7
	B.	-141.9	90.0	-130.2	90.0	-119.2	90.0	-116.7	90.0	-114.6	90.0	-112.8	90.0
	C.	-210.0	90.0	-210.0	90.0	-189.0	90.0	-179.6	90.0	-171.1	90.0	-163.4	90.0
[42"] 168.000	A.	-104.2	90.0	-96.0	90.0	-83.9	83.9	-78.7	78.7	-74.9	74.9	-72.5	72.5
	B.	-132.9	90.0	-121.2	90.0	-110.6	90.0	-104.7	90.0	-101.6	90.0	-99.8	90.0
	C.	-182.4	90.0	-182.4	90.0	-179.0	90.0	-170.0	90.0	-161.8	90.0	-154.3	90.0
[45"] 180.000	A.	-90.8	90.0	-90.8	90.0	-81.4	81.4	-77.3	77.3	-73.8	73.8	-69.7	69.7
	B.	-115.8	90.0	-115.8	90.0	-105.4	90.0	-101.0	90.0	-96.3	90.0	-91.6	90.0
	C.	-158.9	90.0	-158.9	90.0	-158.9	90.0	-158.9	90.0	-153.8	90.0	-146.6	90.0
[48"] 191.750	A.	-80.0	80.0	-80.0	80.0	-80.0	80.0	-78.1	78.1	-74.3	74.3	-70.2	70.2
	B.	-102.0	90.0	-102.0	90.0	-102.0	90.0	-97.7	90.0	-93.0	90.0	-88.5	88.5
	C.	-140.0	90.0	-140.0	90.0	-140.0	90.0	-140.0	90.0	-140.0	90.0	-140.0	90.0

FIND DOOR WIDTH AND HEIGHT INTERSECTION THEN CHOOSE GLASS TYPE A, B OR C.

COMPARATIVE ANALYSIS-TABLE 2. ("OXXO" W/ 3/16" TAPCONS OR #12 SCREWS)

GLASS TYPE & TEST NO.: A. 3/16" TEMPERED (TEST FTL-3508) B. 1/4" TEMPERED (TEST FTL-3509) C. 3/8" TEMPERED (TEST FTL-3510) SEE NOTE 4.

WIDTHS [ ] PANEL DOOR		DOOR HEIGHT 80.000 NEG	80.000 POS	88.000 NEG	88.000 POS	96.000 NEG	96.000 POS	100.000 NEG	100.000 POS	104.000 NEG	104.000 POS	108.000 NEG	108.000 POS
[27"] 108.000	A.	-120.0	90.0	-120.0	90.0	-120.0	90.0	-120.0	90.0	-120.0	90.0	-120.0	90.0
	B.	-120.0	90.0	-120.0	90.0	-120.0	90.0	-120.0	90.0	-120.0	90.0	-120.0	90.0
	C.	-120.0	90.0	-120.0	90.0	-120.0	90.0	-120.0	90.0	-120.0	90.0	-120.0	90.0
[30"] 119.750	A.	-120.0	90.0	-120.0	90.0	-120.0	90.0	-120.0	90.0	-120.0	90.0	-115.7	90.0
	B.	-120.0	90.0	-120.0	90.0	-120.0	90.0	-120.0	90.0	-120.0	90.0	-120.0	90.0
	C.	-120.0	90.0	-120.0	90.0	-120.0	90.0	-120.0	90.0	-120.0	90.0	-120.0	90.0
[36"] 143.750	A.	-117.3	90.0	-105.1	90.0	-96.7	90.0	-92.0	90.0	-88.0	88.0	-87.2	87.2
	B.	-120.0	90.0	-120.0	90.0	-120.0	90.0	-120.0	90.0	-120.0	90.0	-120.0	90.0
	C.	-120.0	90.0	-120.0	90.0	-120.0	90.0	-120.0	90.0	-120.0	90.0	-120.0	90.0
[39"] 156.000	A.	-112.5	90.0	-99.3	90.0	-86.3	86.3	-83.1	83.1	-80.4	80.4	-77.7	77.7
	B.	-120.0	90.0	-120.0	90.0	-119.2	90.0	-116.7	90.0	-114.6	90.0	-112.8	90.0
	C.	-120.0	90.0	-120.0	90.0	-120.0	90.0	-120.0	90.0	-120.0	90.0	-120.0	90.0
[42"] 168.000	A.	-104.2	90.0	-96.0	90.0	-83.9	83.9	-78.7	78.7	-74.9	74.9	-72.5	72.5
	B.	-120.0	90.0	-120.0	90.0	-110.6	90.0	-104.7	90.0	-101.6	90.0	-99.8	90.0
	C.	-120.0	90.0	-120.0	90.0	-120.0	90.0	-120.0	90.0	-120.0	90.0	-120.0	90.0
[45"] 180.000	A.	-90.8	90.0	-90.8	90.0	-81.4	81.4	-77.3	77.3	-73.8	73.8	-69.7	69.7
	B.	-115.8	90.0	-115.8	90.0	-105.4	90.0	-101.0	90.0	-96.3	90.0	-91.6	90.0
	C.	-120.0	90.0	-120.0	90.0	-120.0	90.0	-120.0	90.0	-120.0	90.0	-120.0	90.0
[48"] 191.750	A.	-80.0	80.0	-80.0	80.0	-80.0	80.0	-78.1	78.1	-74.3	74.3	-70.2	70.2
	B.	-102.0	90.0	-102.0	90.0	-102.0	90.0	-97.7	90.0	-93.0	90.0	-88.5	88.5
	C.	-120.0	90.0	-120.0	90.0	-120.0	90.0	-120.0	90.0	-120.0	90.0	-120.0	90.0

FIND DOOR WIDTH AND HEIGHT INTERSECTION THEN CHOOSE GLASS TYPE A, B OR C.

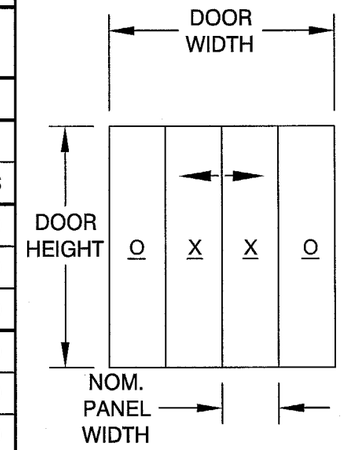

NOTES:
1. NEGATIVE DESIGN LOADS BASED ON TESTED PRESSURE AND GLASS TABLES ASTM E 1300–98 (AND ASTM E 1300–94 OUTSIDE DADE COUNTY).
2. POSTIVE DESIGN LOADS BASED ON WATER TEST PRESSURE AND GLASS TABLES ASTM E 1300–98 (AND ASTM E 1300–94 OUTSIDE DADE COUNTY).
3. THE NUMBERS IN [ ] BRACKETS REPRESENT NOMINAL PANEL WIDTHS.
4. 1/2" x 1 1/2" ALUM. REINFORCEMENT BARS REQUIRED AT ASTRAGAL AND INTERLOCK STILES WITH GLASS OPTION C (3/8" TEMPERED).

COMPARATIVE ANALYSIS FOR "OXXO" CONFIGURATION

1/27/03

Robert L. Clark, P.E.
PE #39712
Structural

PGT INDUSTRIES

1070 TECHNOLOGY DRIVE
NOKOMIS, FL 34275

P.O. BOX 1529
NOKOMIS, FL 34274

Revsd By:	Date:	Revisions:
F.K.	1/27/03	B–NO CHG THIS SHT
F.K.	01/02/03	A-ADD NOTES & ELEV KEY
Drawn By: F.K.	Date: 07/30/02	FTL–3508, 3509, 3510

Approved as complying with the Florida Buiding Code
Date MARCH 13, 2003
NOA# 02-0828.13
Miami Dade Product Control Division
By

Description: DESIGN PRESSURE TABLES (NON-IMPACT)

Title: MID-RISE ALUM. SLIDING GLASS DOOR

Series/Model:	Scale:	Sheet:	Drawing No.	Rev:
SGD-830	NTS	2 of 10	4392-3	B

COMPARATIVE ANALYSIS-TABLE 3. ("OXO" W/ 1/4" TAPCONS)

GLASS TYPE & TEST NO.: A. 3/16" TEMPERED (TEST FTL-3508) B. 1/4" TEMPERED (TEST FTL-3509) C. 3/8" TEMPERED (TEST FTL-3510) SEE NOTE 4.

WIDTHS [ ] PANEL DOOR		DOOR HEIGHT 80.000 NEG	80.000 POS	88.000 NEG	88.000 POS	96.000 NEG	96.000 POS	100.000 NEG	100.000 POS	104.000 NEG	104.000 POS	108.000 NEG	108.000 POS
[27"] 81.000	A.	-181.8	90.0	-162.4	90.0	-146.7	90.0	-139.9	90.0	-133.7	90.0	-128.1	90.0
	B.	-210.0	90.0	-207.0	90.0	-187.0	90.0	-178.4	90.0	-170.5	90.0	-163.3	90.0
	C.	-210.0	90.0	-210.0	90.0	-210.0	90.0	-210.0	90.0	-210.0	90.0	-210.0	90.0
[30"] 90.000	A.	-149.1	90.0	-144.4	90.0	-134.2	90.0	-127.9	90.0	-122.2	90.0	-116.9	90.0
	B.	-210.0	90.0	-189.8	90.0	-171.1	90.0	-163.1	90.0	-155.8	90.0	-149.1	90.0
	C.	-210.0	90.0	-210.0	90.0	-210.0	90.0	-210.0	90.0	-210.0	90.0	-204.6	90.0
[36"] 109.125	A.	-117.3	90.0	-105.1	90.0	-96.7	90.0	-92.0	90.0	-88.0	88.0	-87.2	87.2
	B.	-157.3	90.0	-143.1	90.0	-135.7	90.0	-131.6	90.0	-129.3	90.0	-127.0	90.0
	C.	-210.0	90.0	-210.0	90.0	-201.1	90.0	-191.3	90.0	-182.4	90.0	-174.3	90.0
[39"] 117.000	A.	-113.2	90.0	-99.8	90.0	-87.6	87.6	-83.9	83.9	-81.2	81.2	-78.6	78.6
	B.	-143.9	90.0	-131.7	90.0	-121.2	90.0	-118.7	90.0	-116.6	90.0	-115.0	90.0
	C.	-210.0	90.0	-210.0	90.0	-190.6	90.0	-181.2	90.0	-172.6	90.0	-164.8	90.0
[42"] 126.000	A.	-106.4	90.0	-96.4	90.0	-84.1	84.1	-78.9	78.9	-75.7	75.7	-73.1	73.1
	B.	-135.5	90.0	-122.1	90.0	-111.6	90.0	-105.7	90.0	-103.2	90.0	-101.4	90.0
	C.	-186.2	90.0	-186.2	90.0	-180.4	90.0	-171.3	90.0	-163.1	90.0	-155.6	90.0
[45"] 135.000	A.	-92.6	90.0	-92.6	90.0	-81.9	81.9	-77.2	77.2	-73.7	73.7	-69.7	69.7
	B.	-118.0	90.0	-116.5	90.0	-105.9	90.0	-101.4	90.0	-96.8	90.0	-92.1	90.0
	C.	-162.0	90.0	-162.0	90.0	-162.0	90.0	-162.0	90.0	-154.9	90.0	-147.6	90.0
[48"] 145.125	A.	-80.0	80.0	-80.0	80.0	-80.0	80.0	-78.1	78.1	-74.3	74.3	-70.2	70.2
	B.	-102.0	90.0	-102.0	90.0	-102.0	90.0	-97.7	90.0	-93.0	90.0	-88.5	88.5
	C.	-140.0	90.0	-140.0	90.0	-140.0	90.0	-140.0	90.0	-140.0	90.0	-140.0	90.0

FIND DOOR WIDTH AND HEIGHT INTERSECTION THEN CHOOSE GLASS TYPE A, B OR C.

COMPARATIVE ANALYSIS-TABLE 4. ("OXO" W/ 3/16" TAPCONS OR #12 SCREWS)

GLASS TYPE & TEST NO.: A. 3/16" TEMPERED (TEST FTL-3508) B. 1/4" TEMPERED (TEST FTL-3509) C. 3/8" TEMPERED (TEST FTL-3510) SEE NOTE 4.

WIDTHS [ ] PANEL DOOR		DOOR HEIGHT 80.000 NEG	80.000 POS	88.000 NEG	88.000 POS	96.000 NEG	96.000 POS	100.000 NEG	100.000 POS	104.000 NEG	104.000 POS	108.000 NEG	108.000 POS
[27"] 81.000	A.	-120.0	90.0	-120.0	90.0	-120.0	90.0	-120.0	90.0	-120.0	90.0	-120.0	90.0
	B.	-120.0	90.0	-120.0	90.0	-120.0	90.0	-120.0	90.0	-120.0	90.0	-120.0	90.0
	C.	-120.0	90.0	-120.0	90.0	-120.0	90.0	-120.0	90.0	-120.0	90.0	-120.0	90.0
[30"] 90.000	A.	-120.0	90.0	-120.0	90.0	-120.0	90.0	-120.0	90.0	-120.0	90.0	-116.9	90.0
	B.	-120.0	90.0	-120.0	90.0	-120.0	90.0	-120.0	90.0	-120.0	90.0	-120.0	90.0
	C.	-120.0	90.0	-120.0	90.0	-120.0	90.0	-120.0	90.0	-120.0	90.0	-120.0	90.0
[36"] 109.125	A.	-117.3	90.0	-105.1	90.0	-96.7	90.0	-92.0	90.0	-88.0	88.0	-87.2	87.2
	B.	-120.0	90.0	-120.0	90.0	-120.0	90.0	-120.0	90.0	-120.0	90.0	-120.0	90.0
	C.	-120.0	90.0	-120.0	90.0	-120.0	90.0	-120.0	90.0	-120.0	90.0	-120.0	90.0
[39"] 117.000	A.	-113.2	90.0	-99.8	90.0	-87.6	87.6	-83.9	83.9	-81.2	81.2	-78.6	78.6
	B.	-120.0	90.0	-120.0	90.0	-120.0	90.0	-118.7	90.0	-116.6	90.0	-115.0	90.0
	C.	-120.0	90.0	-120.0	90.0	-120.0	90.0	-120.0	90.0	-120.0	90.0	-120.0	90.0
[42"] 126.000	A.	-106.4	90.0	-96.4	90.0	-84.1	84.1	-78.9	78.9	-75.7	75.7	-73.1	73.1
	B.	-120.0	90.0	-120.0	90.0	-111.6	90.0	-105.7	90.0	-103.2	90.0	-101.4	90.0
	C.	-120.0	90.0	-120.0	90.0	-120.0	90.0	-120.0	90.0	-120.0	90.0	-120.0	90.0
[45"] 135.000	A.	-92.6	90.0	-92.6	90.0	-81.9	81.9	-77.2	77.2	-73.7	73.7	-69.7	69.7
	B.	-118.0	90.0	-116.5	90.0	-105.9	90.0	-101.4	90.0	-96.8	90.0	-92.1	90.0
	C.	-120.0	90.0	-120.0	90.0	-120.0	90.0	-120.0	90.0	-120.0	90.0	-120.0	90.0
[48"] 145.125	A.	-80.0	80.0	-80.0	80.0	-80.0	80.0	-78.1	78.1	-74.3	74.3	-70.2	70.2
	B.	-102.0	90.0	-102.0	90.0	-102.0	90.0	-97.7	90.0	-93.0	90.0	-88.5	88.5
	C.	-120.0	90.0	-120.0	90.0	-120.0	90.0	-120.0	90.0	-120.0	90.0	-120.0	90.0

FIND DOOR WIDTH AND HEIGHT INTERSECTION THEN CHOOSE GLASS TYPE A, B OR C.

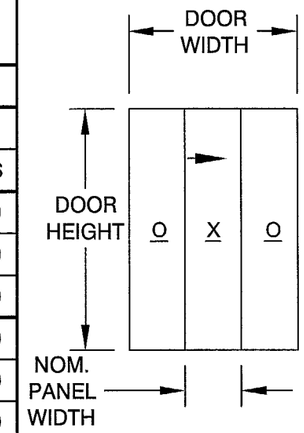

NOTES:
1. NEGATIVE DESIGN LOADS BASED ON TESTED PRESSURE AND GLASS TABLES ASTM E 1300–98 (AND ASTM E 1300–94 OUTSIDE DADE COUNTY).
2. POSTIVE DESIGN LOADS BASED ON WATER TEST PRESSURE AND GLASS TABLES ASTM E 1300–98 (AND ASTM E 1300–94 OUTSIDE DADE COUNTY).
3. THE NUMBERS IN [ ] BRACKETS REPRESENT NOMINAL PANEL WIDTHS.
4. 1/2" x 1 1/2" ALUM. REINFORCEMENT BARS REQUIRED AT ASTRAGAL AND INTERLOCK STILES WITH GLASS OPTION C (3/8" TEMPERED).

COMPARATIVE ANALYSIS FOR "OXO" CONFIGURATION

R L Clark 1/27/03

Robert L. Clark, P.E.
PE #39712
Structural

PGT INDUSTRIES

1070 TECHNOLOGY DRIVE
NOKOMIS, FL 34275

P.O. BOX 1529
NOKOMIS, FL 34274

Revisions	Date	Revisions
F.K.	1/27/03	B–CORRECT TABLE 3
F.K.	01/02/03	A-ADD NOTES & ELEV KEY
F.K.	07/30/02	FTL–3508, 3509, 3510

Approved as complying with the Florida Building Code
Date MARCH 13, 2003
NOA# 02-0828.13
Miami Dade Product Control Division
By Manuel Serra

Description: DESIGN PRESSURE TABLES (NON-IMPACT)

Title: MID-RISE ALUM. SLIDING GLASS DOOR

Series/Model	Scale	Sheet	Drawing No.	Rev
SGD-830	NTS	3 of 10	4392-3	B

COMPARATIVE ANALYSIS-TABLE 5. ("OX"&"XO" W/ 1/4" TAPCONS)

GLASS TYPE & TEST NO.: A. 3/16" TEMPERED (TEST FTL-3508) B. 1/4" TEMPERED (TEST FTL-3509) C. 3/8" TEMPERED (TEST FTL-3510) SEE NOTE 4.

WIDTHS [ ] PANEL DOOR		DOOR HEIGHT 80.000 NEG	80.000 POS	88.000 NEG	88.000 POS	96.000 NEG	96.000 POS	100.000 NEG	100.000 POS	104.000 NEG	104.000 POS	108.000 NEG	108.000 POS
[24"] 48.000	A.	-197.9	90.0	-177.1	90.0	-160.2	90.0	-152.9	90.0	-146.3	90.0	-140.2	90.0
	B.	-210.0	90.0	-210.0	90.0	-204.3	90.0	-195.0	90.0	-186.5	90.0	-178.7	90.0
	C.	-210.0	90.0	-210.0	90.0	-210.0	90.0	-210.0	90.0	-210.0	90.0	-210.0	90.0
[30"] 60.000	A.	-145.8	90.0	-141.5	90.0	-132.8	90.0	-126.6	90.0	-120.9	90.0	-115.7	90.0
	B.	-210.0	90.0	-187.9	90.0	-169.4	90.0	-161.4	90.0	-154.2	90.0	-147.5	90.0
	C.	-210.0	90.0	-210.0	90.0	-210.0	90.0	-210.0	90.0	-210.0	90.0	-202.5	90.0
[36"] 72.000	A.	-117.3	90.0	-105.1	90.0	-96.7	90.0	-92.0	90.0	-88.0	88.0	-87.2	87.2
	B.	-157.3	90.0	-143.1	90.0	-135.7	90.0	-131.6	90.0	-129.3	90.0	-127.0	90.0
	C.	-210.0	90.0	-210.0	90.0	-201.1	90.0	-191.3	90.0	-182.4	90.0	-174.3	90.0
[39"] 78.000	A.	-112.6	90.0	-99.3	90.0	-86.5	86.5	-83.2	83.2	-80.5	80.5	-77.9	77.9
	B.	-142.2	90.0	-130.4	90.0	-119.5	90.0	-117.0	90.0	-114.9	90.0	-113.2	90.0
	C.	-210.0	90.0	-210.0	90.0	-189.3	90.0	-179.9	90.0	-171.3	90.0	-163.6	90.0
[42"] 84.000	A.	-104.5	90.0	-96.0	90.0	-83.9	83.9	-78.7	78.7	-75.0	75.0	-72.6	72.6
	B.	-133.3	90.0	-121.3	90.0	-110.7	90.0	-104.8	90.0	-101.8	90.0	-100.0	90.0
	C.	-182.9	90.0	-182.9	90.0	-179.2	90.0	-170.2	90.0	-162.0	90.0	-154.5	90.0
[45"] 90.000	A.	-91.0	90.0	-91.0	90.0	-81.5	81.5	-77.3	77.3	-73.8	73.8	-69.7	69.7
	B.	-116.1	90.0	-116.1	90.0	-105.5	90.0	-101.0	90.0	-96.4	90.0	-91.6	90.0
	C.	-159.3	90.0	-159.3	90.0	-159.3	90.0	-159.3	90.0	-153.9	90.0	-146.7	90.0
[48"] 96.000	A.	-80.0	80.0	-80.0	80.0	-80.0	80.0	-78.1	78.1	-74.3	74.3	-70.2	70.2
	B.	-102.0	90.0	-102.0	90.0	-102.0	90.0	-97.7	90.0	-93.0	90.0	-88.5	88.5
	C.	-140.0	90.0	-140.0	90.0	-140.0	90.0	-140.0	90.0	-140.0	90.0	-140.0	90.0

FIND DOOR WIDTH AND HEIGHT INTERSECTION THEN CHOOSE GLASS TYPE A, B OR C.

COMPARATIVE ANALYSIS-TABLE 6. ("OX"&"XO" W/ 3/16" TAPCONS OR #12 SCREWS)

GLASS TYPE & TEST NO.: A. 3/16" TEMPERED (TEST FTL-3508) B. 1/4" TEMPERED (TEST FTL-3509) C. 3/8" TEMPERED (TEST FTL-3510) SEE NOTE 4.

WIDTHS [ ] PANEL DOOR		DOOR HEIGHT 80.000 NEG	80.000 POS	88.000 NEG	88.000 POS	96.000 NEG	96.000 POS	100.000 NEG	100.000 POS	104.000 NEG	104.000 POS	108.000 NEG	108.000 POS
[24"] 48.000	A.	-120.0	90.0	-120.0	90.0	-120.0	90.0	-120.0	90.0	-120.0	90.0	-120.0	90.0
	B.	-120.0	90.0	-120.0	90.0	-120.0	90.0	-120.0	90.0	-120.0	90.0	-120.0	90.0
	C.	-120.0	90.0	-120.0	90.0	-120.0	90.0	-120.0	90.0	-120.0	90.0	-120.0	90.0
[30"] 60.000	A.	-120.0	90.0	-120.0	90.0	-120.0	90.0	-120.0	90.0	-120.0	90.0	-115.7	90.0
	B.	-120.0	90.0	-120.0	90.0	-120.0	90.0	-120.0	90.0	-120.0	90.0	-120.0	90.0
	C.	-120.0	90.0	-120.0	90.0	-120.0	90.0	-120.0	90.0	-120.0	90.0	-120.0	90.0
[36"] 72.000	A.	-117.3	90.0	-105.1	90.0	-96.7	90.0	-92.0	90.0	-88.0	88.0	-87.2	87.2
	B.	-120.0	90.0	-120.0	90.0	-120.0	90.0	-120.0	90.0	-120.0	90.0	-120.0	90.0
	C.	-120.0	90.0	-120.0	90.0	-120.0	90.0	-120.0	90.0	-120.0	90.0	-120.0	90.0
[39"] 78.000	A.	-112.6	90.0	-99.3	90.0	-86.5	86.5	-83.2	83.2	-80.5	80.5	-77.9	77.9
	B.	-120.0	90.0	-120.0	90.0	-119.5	90.0	-117.0	90.0	-114.9	90.0	-113.2	90.0
	C.	-120.0	90.0	-120.0	90.0	-120.0	90.0	-120.0	90.0	-120.0	90.0	-120.0	90.0
[42"] 84.000	A.	-104.5	90.0	-96.0	90.0	-83.9	83.9	-78.7	78.7	-75.0	75.0	-72.6	72.6
	B.	-120.0	90.0	-120.0	90.0	-110.7	90.0	-104.8	90.0	-101.8	90.0	-100.0	90.0
	C.	-120.0	90.0	-120.0	90.0	-120.0	90.0	-120.0	90.0	-120.0	90.0	-120.0	90.0
[45"] 90.000	A.	-91.0	90.0	-91.0	90.0	-81.5	81.5	-77.3	77.3	-73.8	73.8	-69.7	69.7
	B.	-116.1	90.0	-116.1	90.0	-105.5	90.0	-101.0	90.0	-96.4	90.0	-91.6	90.0
	C.	-120.0	90.0	-120.0	90.0	-120.0	90.0	-120.0	90.0	-120.0	90.0	-120.0	90.0
[48"] 96.000	A.	-80.0	80.0	-80.0	80.0	-80.0	80.0	-78.1	78.1	-74.3	74.3	-70.2	70.2
	B.	-102.0	90.0	-102.0	90.0	-102.0	90.0	-97.7	90.0	-93.0	90.0	-88.5	88.5
	C.	-120.0	90.0	-120.0	90.0	-120.0	90.0	-120.0	90.0	-120.0	90.0	-120.0	90.0

FIND DOOR WIDTH AND HEIGHT INTERSECTION THEN CHOOSE GLASS TYPE A, B OR C.

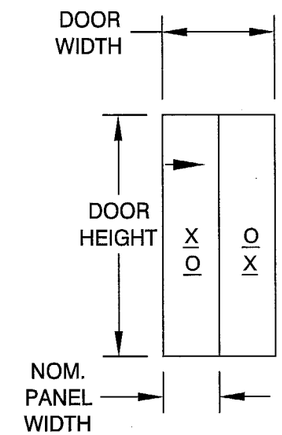

NOTES:
1. NEGATIVE DESIGN LOADS BASED ON TESTED PRESSURE AND GLASS TABLES ASTM E 1300–98 (AND ASTM E 1300–94 OUTSIDE DADE COUNTY).
2. POSTIVE DESIGN LOADS BASED ON WATER TEST PRESSURE AND GLASS TABLES ASTM E 1300–98 (AND ASTM E 1300–94 OUTSIDE DADE COUNTY).
3. THE NUMBERS IN [ ] BRACKETS REPRESENT NOMINAL PANEL WIDTHS.
4. 1/2" x 1 1/2" ALUM. REINFORCEMENT BARS REQUIRED AT ASTRAGAL AND INTERLOCK STILES WITH GLASS OPTION C (3/8" TEMPERED).

COMPARATIVE ANALYSIS FOR "OX" & "XO" CONFIGURATIONS

1/22/03
Robert L. Clark, P.E.
PE #39712
Structural

PGT INDUSTRIES
1070 TECHNOLOGY DRIVE
NOKOMIS, FL 34275
P.O. BOX 1529
NOKOMIS, FL 34274

Revsd By:	Date:	Revisions:
F.K.	1/27/03	B–NO CHG THIS SHT
Revsd By: F.K.	01/02/03	A-ADD NOTES & ELEV KEY
Drawn By: F.K.	07/30/02	FTL–3508, 3509, 3510

Approved as complying with the Florida Building Code
Date MARCH 13 2003
NOA# 02-0828.13
Miami Dade Product Control Division
By Manuel Perez

Description: DESIGN PRESSURE TABLES (NON-IMPACT)

Title: MID-RISE ALUM. SLIDING GLASS DOOR

Series/Model:	Scale:	Sheet:	Drawing No.	Rev:
SGD-830	NTS	4 of 10	4392-3	B

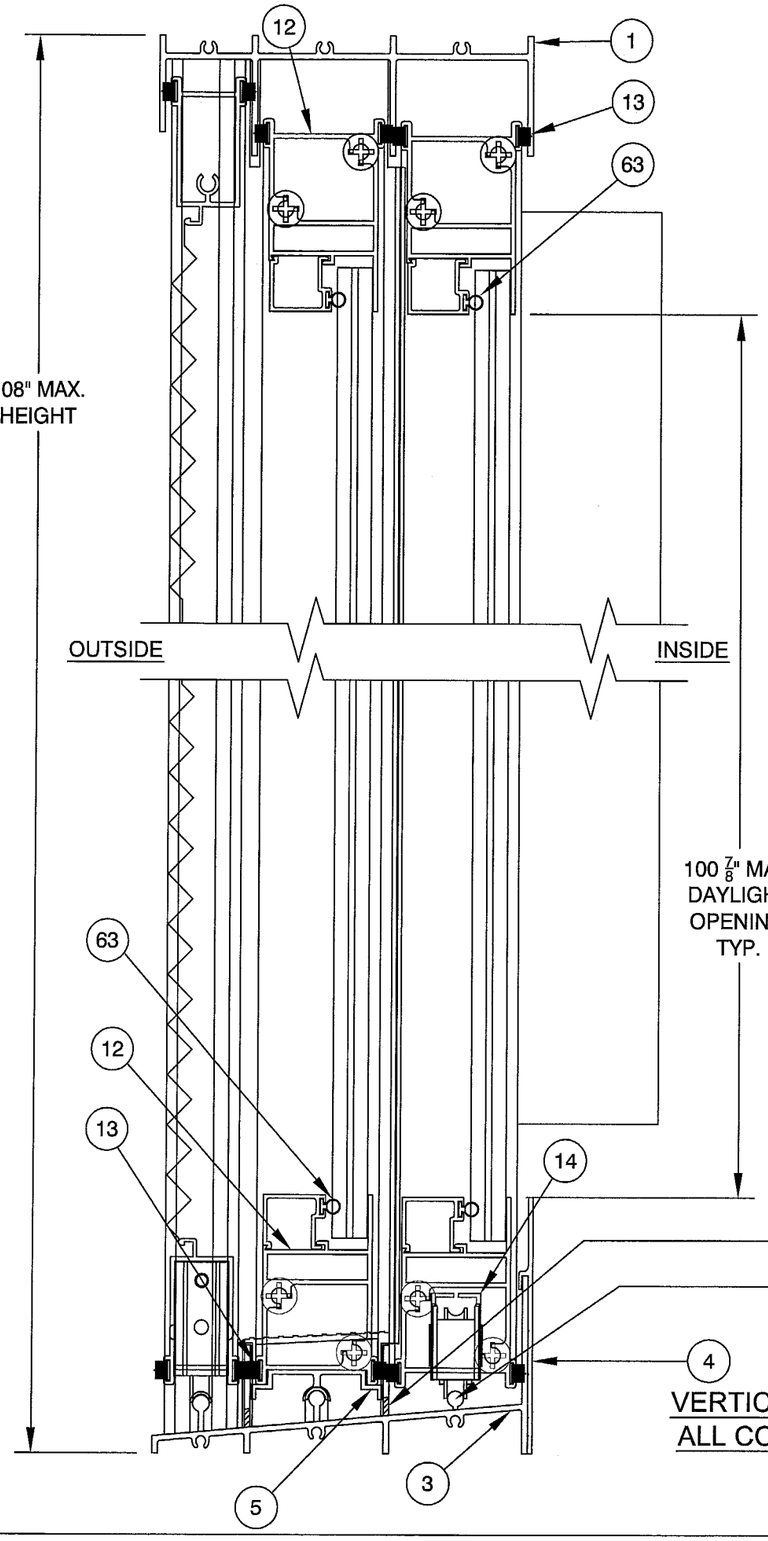

VERTICAL SECTION B-B
ALL CONFIGURATIONS

1" x 1/4" WEEP HOLE (8)
(4) LOCATED AT EACH INTERMEDIATE SILL FLANGE

1 7/8" WEEP NOTCH
THREE AT EACH END OF EACH PANEL TRACK

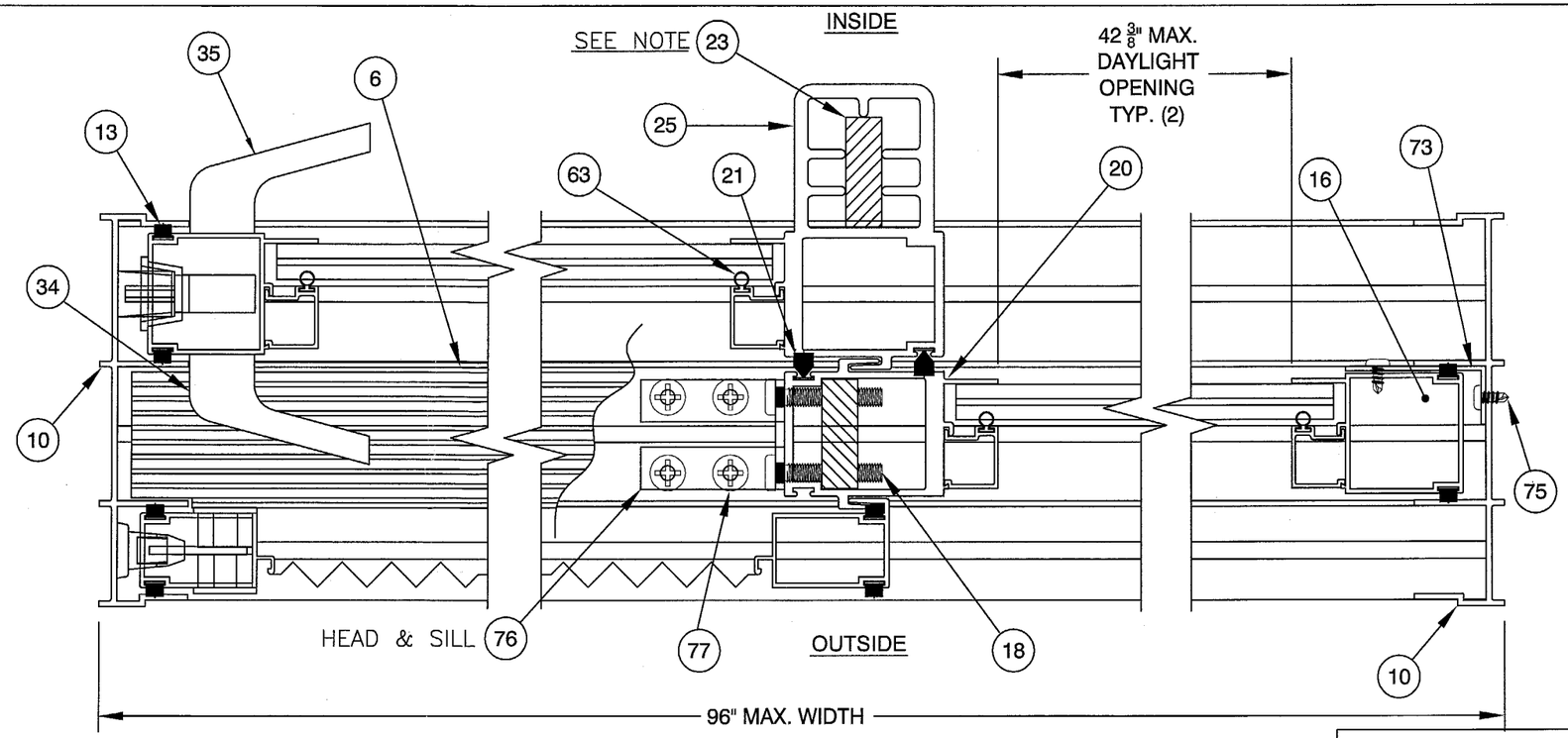

HORIZONTAL SECTION D-D
"XO" OR "OX" CONFIGURATION

NOTE: 1/2" x 1 1/2" ALUM. REINFORCEMENT REQUIRED ONLY WITH 3/8" GLAZING OPTION.

Robert L. Clark, P.E.
PE #39712
Structural

PGT INDUSTRIES

1070 TECHNOLOGY DRIVE
NOKOMIS, FL 34275

P.O. BOX 1529
NOKOMIS, FL 34274

Revsd By:	Date:	Revisions:
F.K.	1/27/03	B–NO CHG THIS SHT
F.K.	12/31/02	A-RESCALE SECTIONS
Drawn By: F.K.	Date: 07/30/02	FTL–3508, 3509, 3510

Approved as complying with the Florida Buiding Code
Date MARCH 13, 2003
NOA# 02-0828.13
Miami Dade Product Control Division
By

Description: SECTION DETAILS (NON-IMPACT)

Title: MID-RISE ALUM. SLIDING GLASS DOOR

Series/Model:	Scale:	Sheet:	Drawing No.	Rev:
SGD-830	NTS	5 of 10	4392-3	B

HORIZONTAL SECTION A-A
"OXXO" CONFIGURATION

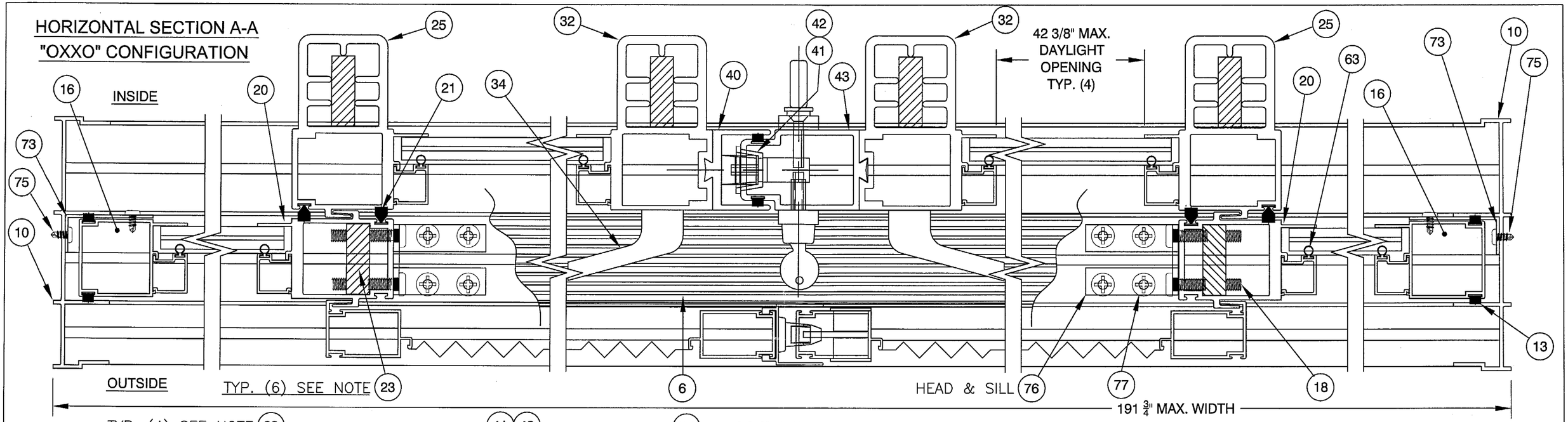

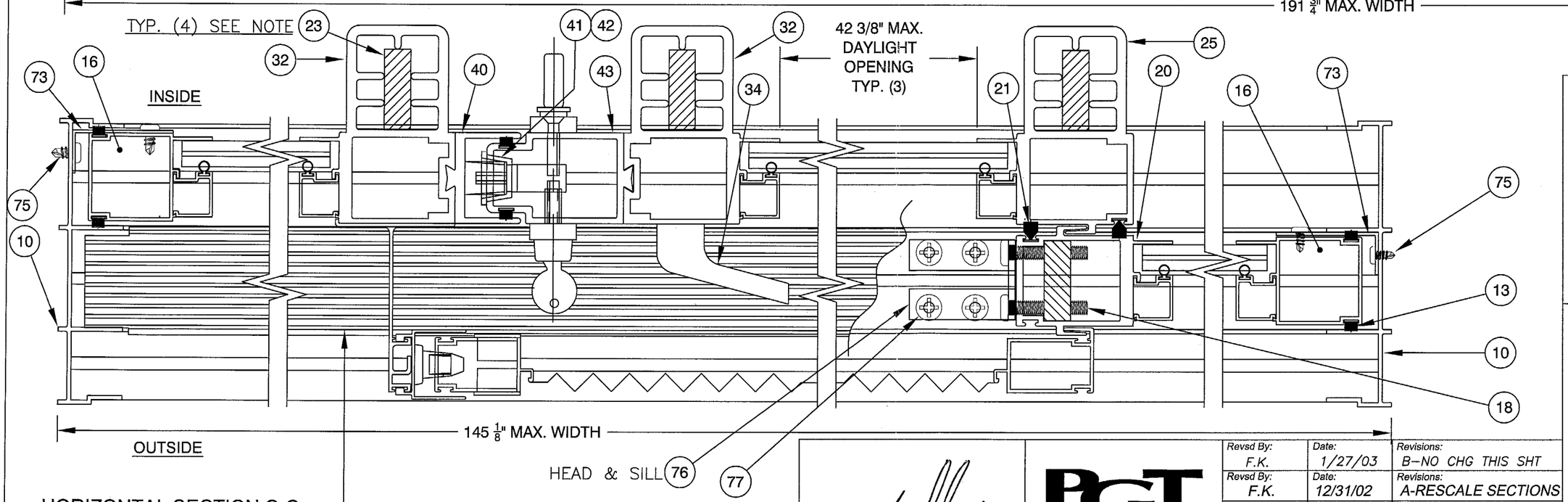

HORIZONTAL SECTION C-C
"OXO" CONFIGURATION

NOTE: $\frac{1}{2}$" x $1\frac{1}{2}$" ALUM. REINFORCEMENT REQUIRED ONLY WITH $\frac{3}{8}$" GLAZING OPTION.

R L Clark
1/27/03

Robert L. Clark, P.E.
PE #39712
Structural

PGT INDUSTRIES

1070 TECHNOLOGY DRIVE
NOKOMIS, FL 34275

P.O. BOX 1529
NOKOMIS, FL 34274

Revs'd By:	Date:	Revisions:
F.K.	1/27/03	B–NO CHG THIS SHT
F.K.	12/31/02	A-RESCALE SECTIONS
Drawn By: F.K.	Date: 07/30/02	FTL–3508, 3509, 3510

Approved as complying with the Florida Building Code
Date MARCH 13 2003
NOA# 02-0828.13
Miami Dade Product Control Division
By Manuel Sera

Description: SECTION DETAILS CONTINUED (NON-IMPACT)

Title: MID-RISE ALUM. SLIDING GLASS DOOR

Series/Model:	Scale:	Sheet:	Drawing No.	Rev:
SGD-830	NTS	6 of 10	4392-3	B

MK.	DWG #	PGT#	DESCRIPTION	OXXO QTY	OXO QTY	OX XO QTY
1	4302B	612245	FRAME HEAD	1	1	1
2	4386	7P4386	SILL/HEAD WEATHER STRIPPING PAD	1 AT CENTER	1 AT CENTER	1 AT CENTER
3	4303A	64303	FRAME SILL	1	1	1
4	4361	64361	3.500 SILL ADD ON	1	1	1
5	4314	612254	ADAPTER, FIXED PANEL	2	2	1
6	4315	64315	THRESHOLD COVER	1	1	1
7	4385	71164	HEAVY DUTY 4 HOLE BUMP STOP	4	4	2
8		78x38PPTX	#8 X 3/8 LG. PH. P. HEAD TEK S. STL.	4 / STOP	4 / STOP	4 / STOP
9	4386	7P4386	SILL/HEAD WEATHER STRIPPING PAD	1 AT CENTER	1 AT CENTER	1 AT CENTER
10	4304	612247	FRAME JAMB	2	2	2
11	1155-1	781PQX	#8 X 1" LG. S. STL. QUAD P. HEAD	6 / JAMB	6 / JAMB	6 / JAMB
12	4305A	64305	TOP AND BOTTOM RAIL	2 / PANEL	2 / PANEL	2 / PANEL
13	1235	67S16G	WSTP .170 X .270 BACK, FIN SEAL	2 / RAIL	2 / RAIL	2 / RAIL
14	1050	71050X	TANDEM ROLLER S. STL.	2 / O/ PANEL	2 / O/ PANEL	2 / O/ PANEL
11	1155-1	781PQX	#8 X 1" LG. S. STL. QUAD P.HEAD	2 / ROLLER	2 / ROLLER	2 / ROLLER
16	4306	612249	LOCK STILE	2	2	2
13	1235	67S16G	WSTP .170 X .270 BACK, FIN SEAL	2 / SIDE RAIL	2 / SIDE RAIL	2 / SIDE RAIL
18		720X112X	1/4-20 X 1.50 PH. P. HEAD S. STL.	4 / Side Rail	4 / SIDE RAILI	4 / SIDE RAIL
19	4389	44389	LOCKSTYLE END PLUG	2 / SIDE RAIL	2 / SIDE RAIL	2 / SIDE RAIL
20	4383	64383	FIXED DOUBLE INTERLOCK	2	1	1
21	4393	67393G	WSTP .400 X .270 BACK, FIN SEAL	2	2	2
18		720X112X	1/4-20 X 1.50 PH. PN. S. STL.	4 / FXD DBL INTLK	4 / FXD DBL INTLK	4 / FXD DBL INTLK
23	4357	64357M	ALUM. REINF. .500 X 1.500	1 / FXD DBL INTLK	1 / FXD DBL INTLK	1 / FXD DBL INTLK
24	4388	44388	MOVING/FIXED INTERLOCK END PLUG	2 / FXD DBL INTLK	2 / FXD DBL INTLK	2 / FXD DBL INTLK
25	4382	64382	MOVING INTERLOCK	2	1	1
21	4393	67393G	WSTP .400 X .270 BACK, FIN SEAL	1	1	1
18		720X112X	1/4-20 X 1.50 PH. PN. S. STL.	0	0	4 / MVG INTLK
23	4357	64357M	ALUM. REINF. .500 X 1.500	1 / MVG INTLK	1 / MVG INTLK	1 / MVG INTLK
24	4388	44388	MOVING/FIXED INTERLOCK END PLUG	2 / MVG INTLK	2 / MVG INTLK	2 / MVG INTLK
30	4392	7XX1MD(BSW)	TOP STICKER COVER	1 / MVG INTLK	1 / MVG INTLK	1 / MVG INTLK
30	4392	7XX2MD(BSW)	BOTTOM STICKER COVER	1 / MVG INTLK	1 / MVG INTLK	1 / MVG INTLK
32	4379	64379	ASTRAGAL BASE	2	2	0
33	1180	71420x114 SHC	1/4-20 X 1.25 LG. SHCS S. STL.	4 / ASTRA BASE	4 / ASTRA BASE	0
23	4357	64357M	ALUM. REINF. .500 X 1.500	1 / ASTRA BASE	1 / ASTRA BASE	0
34			TRUTH EXTERIOR PULL HANDLE	1	1	1
35			TRUTH INTERIOR PULL HANDLE	0	0	1
36	4387	44387	ASTRAGAL BASE END PLUG	2 / ASTRA BASE	2 / ASTRA BASE	0
30	4392	7XX1MD(BSW)	TOP STICKER COVER	1 / MVG INTLK	1 / ASTRA BASE	0
30	4392	7XX2MD(BSW)	BOTTOM STICKER COVER	1 / MVG INTLK	1 / ASTRA BASE	0
39		71032INSERT	10-32 ALUMIN THREADED INSERT	2 / ASTRA BASE	2 / ASTRA BASE	0
40	4380	64380	FEMALE ADD-ON	1	1	0
41	4372	22507MLK	MORTISE LOCK KEEPER, SURFACE MTG	1	1	0
42			#8 X 3/4" LG. PH PAN HEAD S. STL	2	2	0
43	4381	64381	MALE ADD-ON	1	1	0
21	4393	67393G	WSTP .400 X .270 BACK, FIN SEAL	2 /	2	0
45	1048	71048	ROLLER ADJUSTMENT PLUG 1/2 HOLE PLU	2 / O/ PANEL	2 / O/ PANEL	0
47	1040-1		MORTISE LOCK, SURFACE MTG., 3 PLY HOOK, INT.THUMB KEY OPERATOR	1	1	0
48		7632x25FPX	#6-32 X 1/4" LG. PH FH S. STL.	2	2	0
49	4372-2	72260MLRA	MORTICE LOCK RECESS ADAPT.	1	1	0
50		71032x1FPFX	#10-32 X 1" LG. PH FH S. STL.	2	2	0
54			3/16 TEMPERED GLASS	4	3	2
55			1/4 TEMPERED GLASS	4	3	2
56			3/8 TEMPERED GLASS	4	3	2
57			SILICONE DOW 899 OR DOW 995	A/R	A/R	A/R
58	4323	612260	GLAZING BEAD 3/16" OR 1/4" GLASS	4/PANEL	4/PANEL	4/PANEL
59	4394	64394	GLAZING BEAD 3/8" GLASS	4/PANEL	4/PANEL	4/PANEL
63	1224	TP-247	VINYL BULB WEATHERSTRIP	8 PIECES	8 PIECES	1 / BEAD PC

MK.	DWG #	PGT#	DESCRIPTION	OXXO QTY	OXO QTY	OX XO QTY
73	4362-1	4362B	INT. PANEL FIXING CLIP .800 x 1.935 x .060 .800 x 1.935 x 1.500 LG. .060 AL. ANGLE	6	6	3
75			#8 X 1/2" LG. PH PH S. STL	12	12	6
76	4356	74356A	FIXED PANEL ANGLE BRACKET 2.500 x 2.000 x 1.500 LG .125 AL. ANGLE	4	2	2
77			#10 X 3/4 LG. PH PH S. STL	16	8	8
80	4317	612256	SCREEN FRAME TOP RAIL	2	2	1
81	4318	612257	SCREEN FRAME BOT. RAIL	2	2	1
82	4319	612258	SCREEN FRAME SIDE RAIL	2	2	2
83		7LOCK	LOCKSET, SCREEN	2	2	2
84	4341	7X1720X	P-CAM LATCH	1	1	1
85	4320	612259	SCREEN FRAME MEETING RAIL	2	2	2
86	4344	64344	SCREEN ASTRAGAL	1	1	0
87	653	7SDKEEP	JAMB KEEPER	1	1	0
88	4384	64384	SCREEN ASTRAGAL ADAPTER	0	1	0
89			SCHNEE-MOOREHEAD NARROW JOINT SEALANT (USED TO SEAL PANEL CORNERS)			

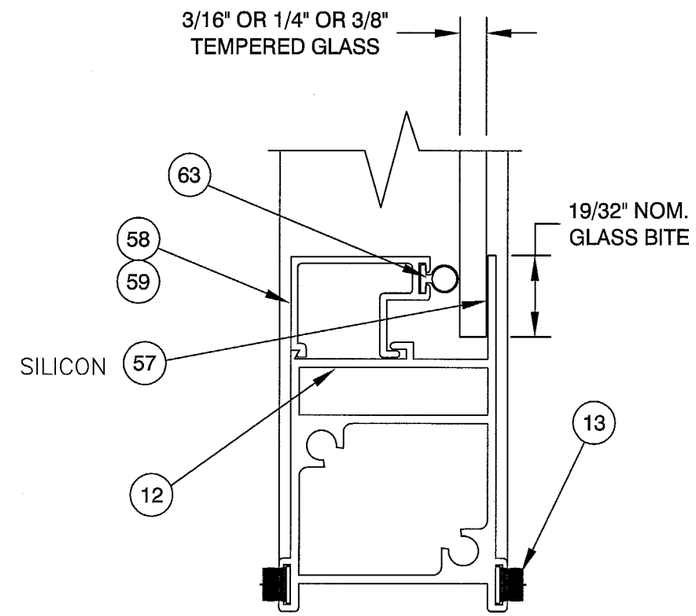

GLAZING DETAIL

Approved as complying with the Florida Buiding Code
Date MARCH 13 2003
NOA# 02-0828.13
Miami Dade Product Control Division
By Manuel Perez

Robert L. Clark, P.E.
PE #39712
Structural
1/27/03

PGT INDUSTRIES

1070 TECHNOLOGY DRIVE
NOKOMIS, FL 34275

P.O. BOX 1529
NOKOMIS, FL 34274

Revsd By:	Date:	Revisions:
F.K.	1/27/03	B–NO CHG THIS SHT
F.K.	01/02/03	A-ADDED SHT.
F.K.	07/30/02	FTL–3508, 3509, 3510

Description: PARTS LIST & GLAZING DETAIL (NON-IMPACT)

Title: MID-RISE ALUM. SLIDING GLASS DOOR

Series/Model:	Scale:	Sheet:	Drawing No.	Rev:
SGD-830	NTS	7 of 10	4392-3	B

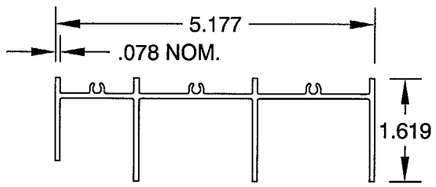

1 FRAME HEAD
MAT'L: 6063-T5
DWG# 4302

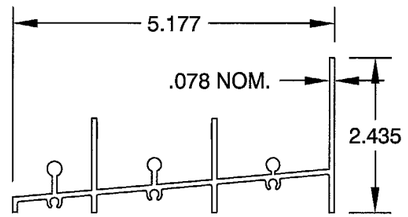

3 FRAME SILL
MAT'L: 6063-T5
DWG# 4303

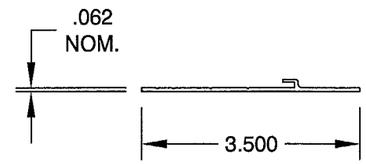

4 ADD ON SILL
MAT'L: 6063HS-T54
DWG# 4361

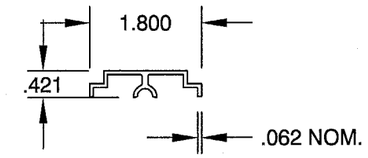

5 ADAPTER, FIXED PANEL
MAT'L: 6063-T5
DWG# 4314

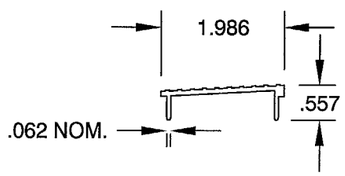

6 THRESHOLD COVER
MAT'L: 6063-T5
DWG# 4315

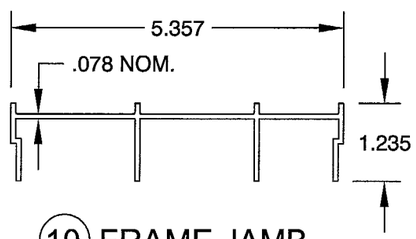

10 FRAME JAMB
MAT'L: 6063-T5
DWG# 4304

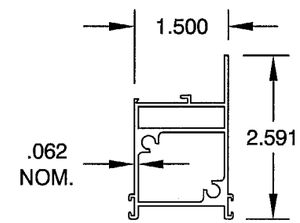

12 TOP & BOTT. RAIL
MAT'L: 6063-T5
DWG# 4305

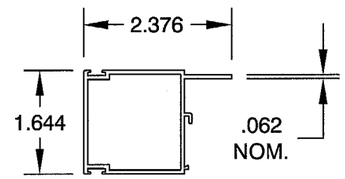

16 LOCK STILE
MAT'L: 6063-T5
DWG# 4306

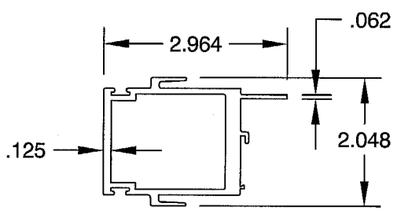

20 FXD DOUBLE INT/LK
MAT'L: 6063HDT6
DWG# 4383

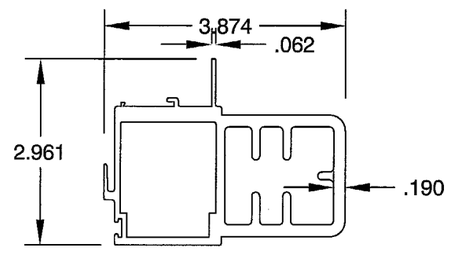

25 MOVING INTERLOCK
MAT'L: 6063HDT6
DWG# 4382

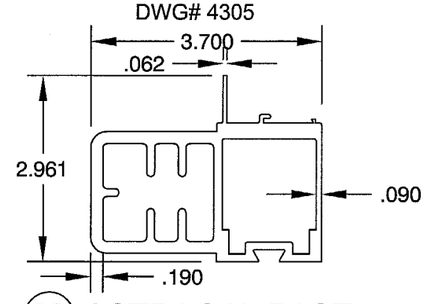

32 ASTRAGAL BASE
MAT'L: 6063-T5
DWG# 4379

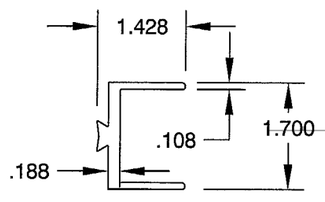

40 FEMALE ADD-ON
MAT'L: 6063-T5
DWG# 4380

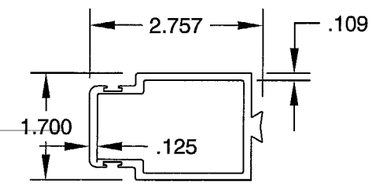

43 MALE ADD-ON
MAT'L: 6063-T5
DWG# 4381

Approved as complying with the Florida Buiding Code
Date MARCH 13, 2003
NOA# 02-0828.13
Miami Dade Product Control Division
By Manuel Perez

Robert L. Clark, P.E.
PE #39712
Structural
1/27/03

PGT INDUSTRIES

1070 TECHNOLOGY DRIVE
NOKOMIS, FL 34275

P.O. BOX 1529
NOKOMIS, FL 34274

Revsd By:	Date:	Revisions:
F.K.	1/27/03	B–NO CHG THIS SHT
F.K.	12/31/02	A-CHG ITEM NO.S
F.K.	07/30/02	FTL–3508, 3509, 3510

Description: EXTRUSIONS - DOOR & FRAME (NON-IMPACT)

Title: MID-RISE ALUM. SLIDING GLASS DOOR

Series/Model:	Scale:	Sheet:	Drawing No.	Rev:
SGD-830	NTS	8 of 10	4392-3	B

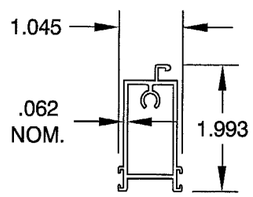

(80) SCREEN FRAME TOP RAIL
MAT'L: 6063-T5
DWG# 4317

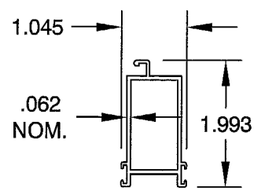

(81) BOTTOM RAIL
MAT'L: 6063-T5
DWG# 4318

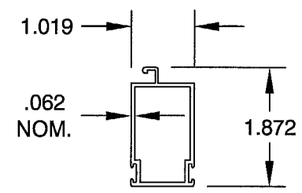

(82) SCREEN FRAME SIDE RAIL
MAT'L: 6063-T5
DWG# 4319

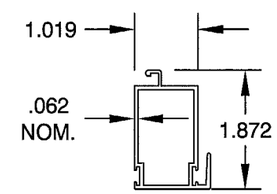

(85) SCREEN FRAME MEETING RAIL
MAT'L: 6063-T5
DWG# 4320

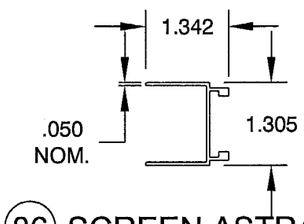

(86) SCREEN ASTRAGAL
MAT'L: 6063-T5
DWG# 4344

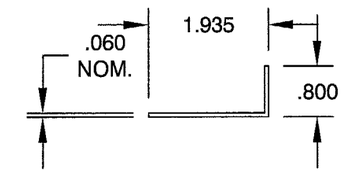

(76) FIXED PANEL CLIP
MAT'L: 6063-T5
DWG# 4328

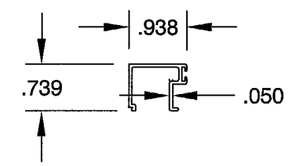

(59) 3/8" GLAZING BEAD
MAT'L: 6063-T5
DWG# 4394

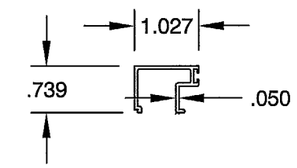

(58) 3/16" OR 1/4" GLAZING BEAD
MAT'L: 6063-T5
DWG# 4323

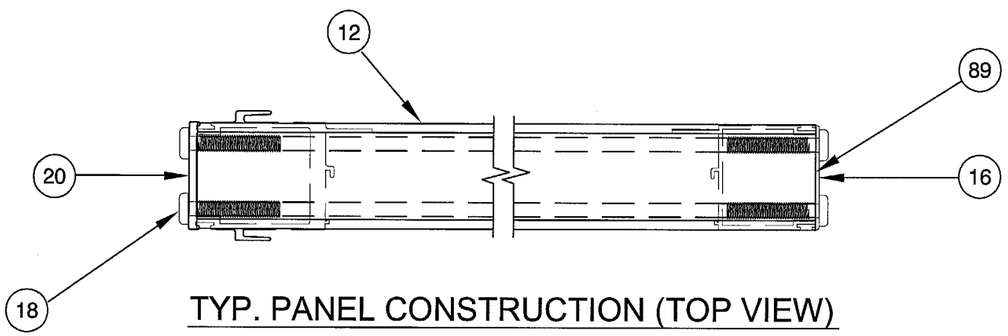

TYP. PANEL CONSTRUCTION (TOP VIEW)

(2) SCREWS AT TOP
& BOTTOM RAIL
(4) TOTAL PER SIDE

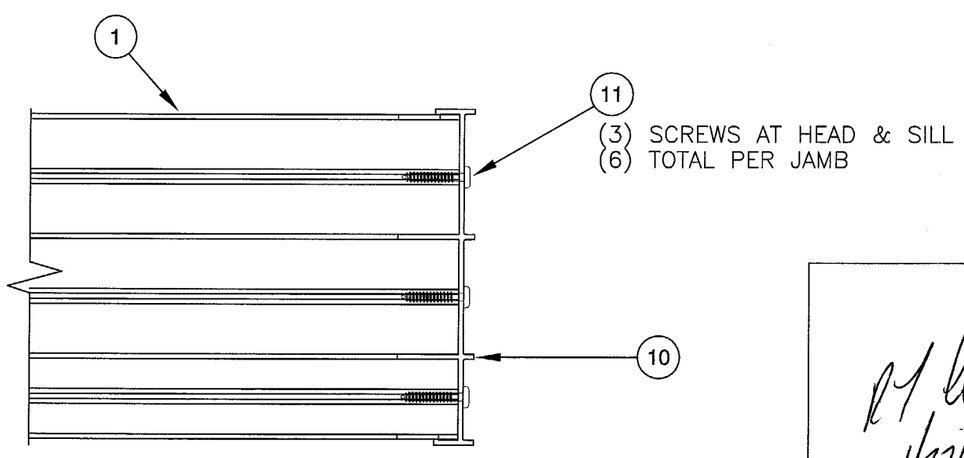

(3) SCREWS AT HEAD & SILL
(6) TOTAL PER JAMB

FRAME CONSTRUCTION (TOP VIEW)

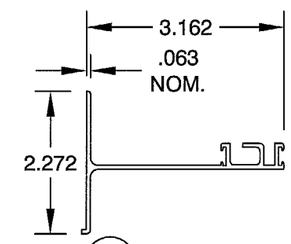

(88) SCREEN ASTRAGAL ADAPTER
MAT'L: 6063-T5
DWG# 4384

Approved as complying with the Florida Buiding Code
Date MARCH 13, 2003
NOA# 02-0828.13
Miami Dade Product Control Division
By Manuel Perez

Robert L. Clark, P.E.
PE #39712
Structural
1/27/03

PGT INDUSTRIES
1070 TECHNOLOGY DRIVE
NOKOMIS, FL 34275
P.O. BOX 1529
NOKOMIS, FL 34274

Revsd By:	Date:	Revisions:
F.K.	1/27/03	B–NO CHG THIS SHT
F.K.	12/31/02	A-CHG ITEM NO.S
F.K.	07/30/02	FTL–3508, 3509, 3510

Description: EXTRUSIONS & CORNER CONSTRUCTION (NON-IMPACT)

Title: MID-RISE ALUM. SLIDING GLASS DOOR

Series/Model:	Scale:	Sheet:	Drawing No.	Rev:
SGD-830	NTS	9 of 10	4392-3	B

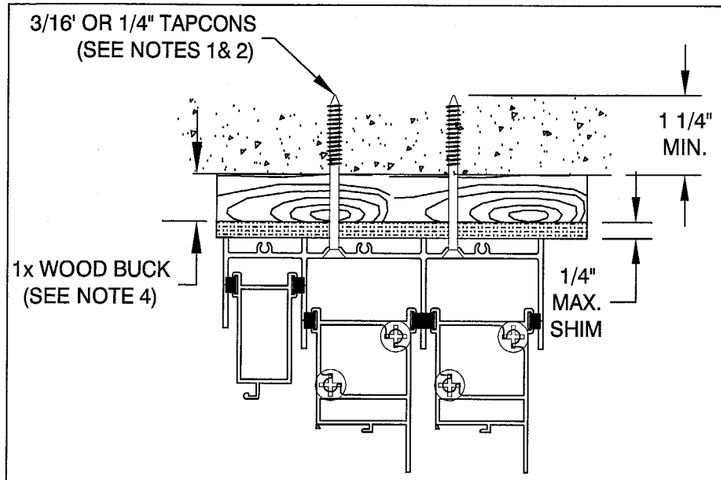

CONCRETE

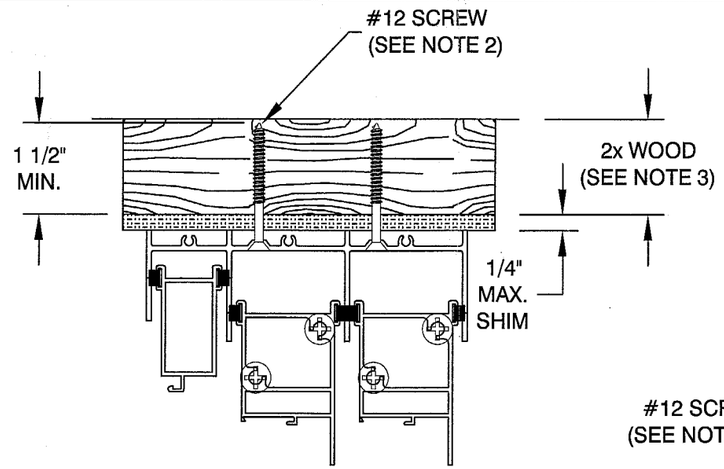

WOOD

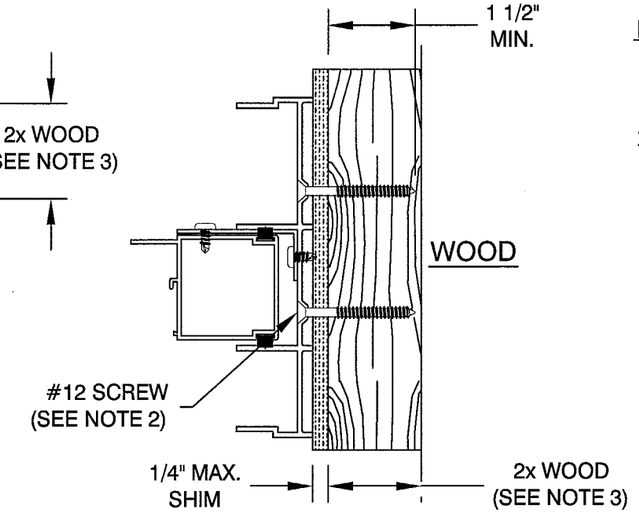

WOOD

NOTES:

1. USE ONLY MIAMI–DADE COUNTY APPROVED TAPCONS.
2. SEE SHEET 1 FOR ADDITIONAL FASTENERS REQUIRED WHEN ANCHORING WITH 3/16" TAPCONS OR #12 SCREWS.
3. INSTALLATION TO THE SUBSTRATE OF WOOD BUCKS 1 1/2" OR MORE THICK TO BE ENGINEERED BY OTHERS AND TO BE REVIEWED BY BUILDING OFFICIAL.
4. INSTALLATION TO THE SUBSTRATE OF WOOD BUCKS LESS THAN 1 1/2" THICK TO BE ENGINEERED BY OTHERS.

TYPICAL FRAME HEAD INSTALLATIONS

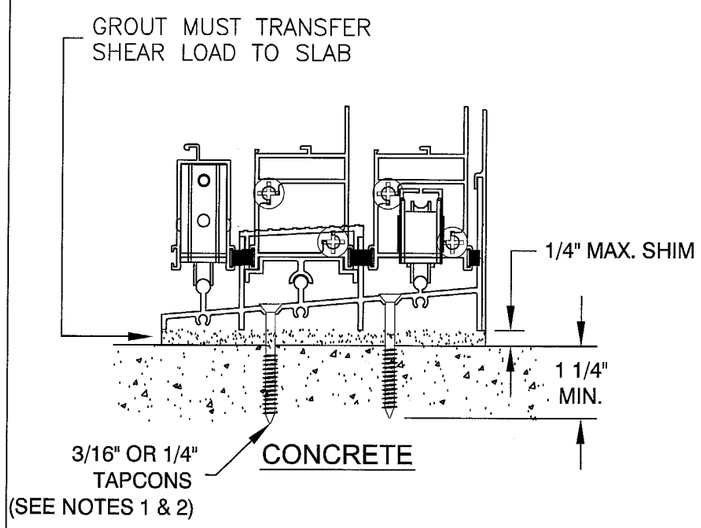

CONCRETE

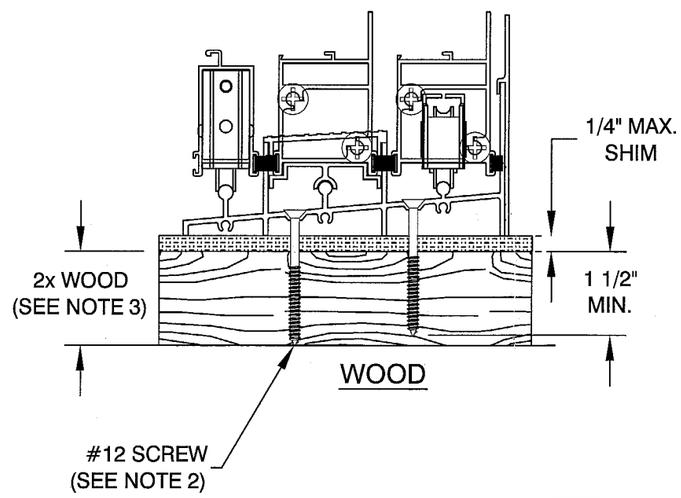

WOOD

TYPICAL FRAME SILL INSTALLATIONS

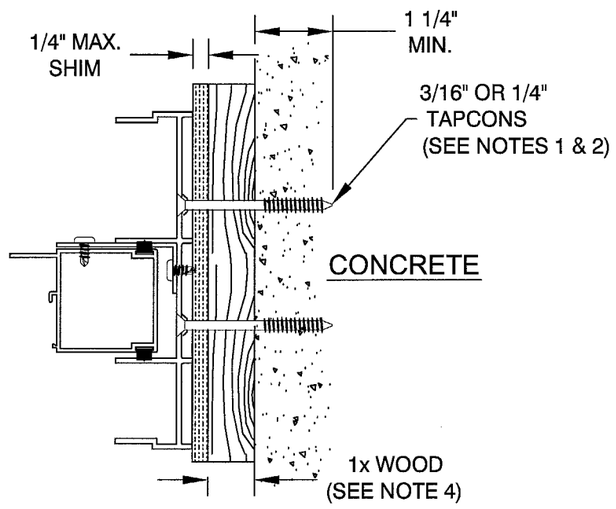

CONCRETE

TYPICAL FRAME JAMB INSTALLATIONS

Robert L. Clark, P.E.
PE #39712
Structural
1/27/03

PGT INDUSTRIES

1070 TECHNOLOGY DRIVE
NOKOMIS, FL 34275

P.O. BOX 1529
NOKOMIS, FL 34274

Revsd By:	Date:	Revisions:
F.K.	1/27/03	B–NO CHG THIS SHT
Revsd By: F.K.	Date: 12/31/02	Revisions: A-DIM. SHIM SPACE
Drawn By: F.K.	Date: 07/30/02	FTL–3508, 3509, 3510

Approved as complying with the Florida Buiding Code
Date MARCH 13, 2003
NOA# 02-0828.13
Miami Dade Product Control Division
By Manuel Perez

Description: ANCHORAGE (NON-IMPACT)

Title: MID-RISE ALUM. SLIDING GLASS DOOR

Series/Model:	Scale:	Sheet:	Drawing No.	Rev:
SGD-830	NTS	10 of 10	4392-3	B