MIAMI-DADE

BUILDING CODE COMPLIANCE OFFICE (BCCO)
PRODUCT CONTROL DIVISION

MIAMI-DADE COUNTY, FLORIDA
METRO-DADE FLAGLER BUILDING
140 WEST FLAGLER STREET, SUITE 1603
MIAMI, FLORIDA 33130-1563
(305) 375-2901 FAX (305) 375-2908

NOTICE OF ACCEPTANCE (NOA)

Metl-Span I, Ltd.
1497 N. Kealy
Lewisville, Texas 75057

SCOPE:
This NOA is being issued under the applicable rules and regulations governing the use of construction materials. The documentation submitted has been reviewed by Miami-Dade County Product Control Division and accepted by the Board of Rules and Appeals (BORA) to be used in Miami Dade County and other areas where allowed by the Authority Having Jurisdiction (AHJ).

This NOA shall not be valid after the expiration date stated below. The Miami-Dade County Product Control Division (In Miami Dade County) and/or the AHJ (in areas other than Miami Dade County) reserve the right to have this product or material tested for quality assurance purposes. If this product or material fails to perform in the accepted manner, the manufacturer will incur the expense of such testing and the AHJ may immediately revoke, modify, or suspend the use of such product or material within their jurisdiction. BORA reserves the right to revoke this acceptance, if it is determined by Miami-Dade County Product Control Division that this product or material fails to meet the requirements of the applicable building code.

This product is approved as described herein, and has been designed to comply with the High Velocity Hurricane Zone of the Florida Building Code.

DESCRIPTION: Metl-Span III CF- 42, Wall Panel

APPROVAL DOCUMENT: Drawing No. 1180, titled " CF – 42 Wall Panel ", sheets 1 and 2 of 2, prepared by W.W. Schaefer Engineering & Consulting, P.A., dated October 31, 2002, signed and sealed by Warren W. Schaefer, P.E., bearing the Miami-Dade County Product Control Approval stamp with the Notice of Acceptance number and approval date by the Miami-Dade County Product Control Division.

MISSILE IMPACT RATING: Large and Small Missile Impact

LABELING: Each panel shall bear a permanent label with the manufacturer's name or logo, city, state and the following statement: "Miami-Dade County Product Control Approved", unless otherwise noted herein.

RENEWAL of this NOA shall be considered after a renewal application has been filed and there has been no change in the applicable building code negatively affecting the performance of this product.

TERMINATION of this NOA will occur after the expiration date or if there has been a revision or change in the materials, use, and/or manufacture of the product or process. Misuse of this NOA as an endorsement of any product, for sales, advertising or any other purposes shall automatically terminate this NOA. Failure to comply with any section of this NOA shall be cause for termination and removal of NOA.

ADVERTISEMENT: The NOA number preceded by the words Miami-Dade County, Florida, and followed by the expiration date may be displayed in advertising literature. If any portion of the NOA is displayed, then it shall be done in its entirety.

INSPECTION: A copy of this entire NOA shall be provided to the user by the manufacturer or its distributors and shall be available for inspection at the job site at the request of the Building Official.

This NOA consists of this page 1 as well as approval document mentioned above.
The submitted documentation was reviewed by **Helmy A. Makar, P.E.**

PRODUCT CONTROL ACCEPTED

NOA No 02-1107.01
Expiration Date: 03/06/2008
Approval Date: 03/06/2003

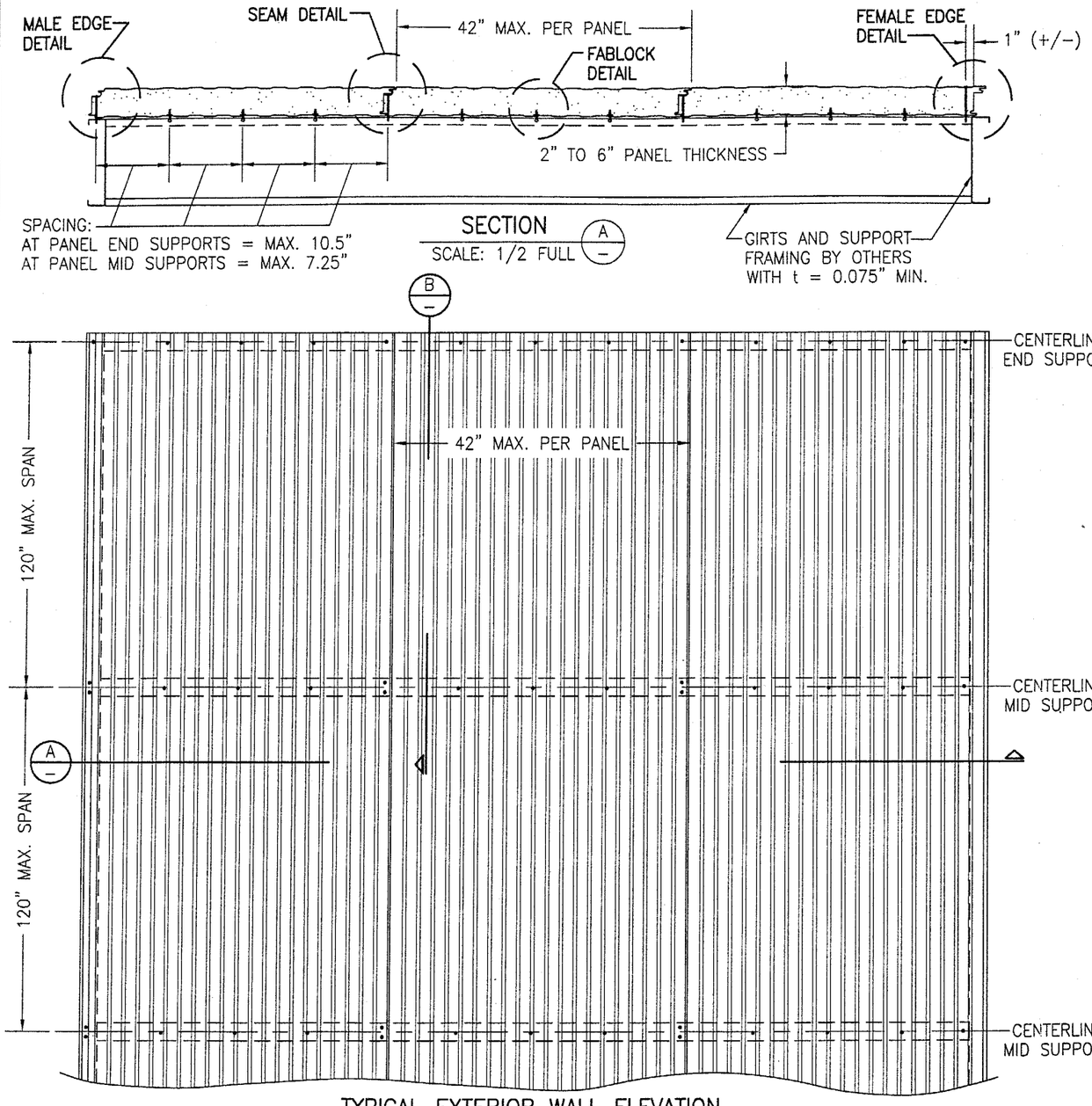

TYPICAL EXTERIOR WALL ELEVATION

PRODUCT APPROVAL IS LIMITED TO THE WALL PANEL & ITS CONNECTING CLIPS. THE STRUCTURAL ADEQUACY OF ALL OTHER STRUCTURAL ITEMS (BEAMS, COLUMNS, PURLINS, FACIA SUPPORTS, CONNECTIONS OF STRUCTURE, ETC. SHALL BE VERIFIED BY THE STRUCTURAL PLANS EXAMINER OF THE CORRESPONDING BUILDING DEPARTMENT. THE WALL PANELS SHALL NOT BE DESIGNED TO ACT AS A DIAPHRAGM.

GENERAL NOTES:

1. THIS STRUCTURAL WALL PANEL SYSTEM HAS BEEN DESIGNED IN ACCORDANCE WITH THE FLORIDA BUILDING CODE (F.B.C).
2. ALL WALL PANELS ARE MAX 42" WIDE, CONSIST OF TWO(2) 26 GA. (t = 0.019" MIN.) G-90 CLAD STEEL SKINS (Fy = MIN. 38 KSI) COATED WITH AN EMBOSSED & PAINTED FINISH & ARE FOAM FILLED WITH FOAMED-IN-PLACE NON-CFC 2.0 LB/CU. FT. DENSITY POLYURETHANE.
3. THE WALL PANELS SHALL BE INSTALLED OVER WALL STRUCTURE AS SPECIFIED ON THESE DRAWINGS.
4. THE WALL PANELS MUST BE INSTALLED OVER MIN. 2 SUPPORT SPANS. HORIZONTAL SEAMS MAY BE PRESENT AT CENTERLINE OF SUPPORTING GIRTS PROVIDING THE SEAMS ARE FLASHED & PROPERLY SEALED PER METL-SPAN SPECIFICATIONS AND EACH PANEL END IS SECURED PER THESE DRAWINGS.
5. REQUIRED DESIGN WIND LOADS SHALL BE DETERMINED FOR EACH PROJECT. THIS PANEL SYSTEM MAY NOT BE INSTALLED WHEN THE REQUIRED DESIGN WIND LOADS ARE GREATER THAN THE ALLOWABLE WIND LOADS SPECIFIED ON THIS DRAWING.
7. THIS WALL PANEL SYSTEM HAS BEEN TESTED AS AN IMPACT SYSTEM IN ACCORDANCE WITH PROTOCALS TAS-201, 202 & 203.
8. WALL PANEL MANUFACTURER'S PERMANENT LABEL SHALL BE PLACED AT THE END OF EACH PANEL RUN AND SHALL READ: METL-SPAN I, LTD.
   LEWISVILLE, TEXAS
   DADE COUNTY PRODUCT CONTROL APPROVED
9. ALL SCREWS SHALL BE CORROSION RESISTANT SELF TAPPING SCREWS.
10. THE SUPPORTING STRUCTURE, OVER WHICH THE PANELS ARE TO BE INSTALLED, MUST BE MINIMUM 14 GAGE (MIN. 0.075") STEEL WITH MIN. Fy = 33 KSI.
11. THESE WALL PANELS SHALL NOT BE CONSIDERED TO OR BE USED FOR TRANSFER OF DIAPHRAM ACTION OF WALL TO SUPPORTING STRUCTURE.

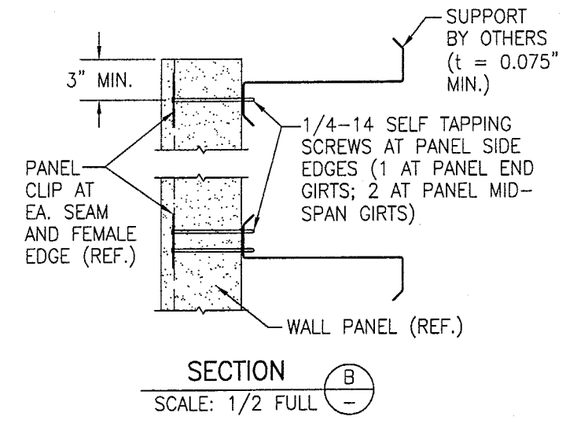

ALLOWABLE PRESSURE
(2 OR MORE SPANS PER PANEL)

SPAN (IN.)	ALLOWABLE PRESSURE POSITIVE (PSF)	ALLOWABLE PRESSURE NEGATIVE (PSF)
48	70.0	90.0
54	67.1	80.0
60	64.2	72.0
66	61.2	65.5
72	58.3	60.0
78	53.8	55.4
84	50.0	51.4
90	46.7	48.0
96	43.8	45.0
102	41.2	42.4
108	38.9	40.0
114	36.8	37.9
120	35.0	35.0

ALLOWABLE PRESSURE
(SINGLE SPAN PANELS)

SPAN (IN.)	ALLOWABLE PRESSURE POSITIVE (PSF)	ALLOWABLE PRESSURE NEGATIVE (PSF)
48	64.6	76.7
54	45.4	53.9
60	33.1	39.3
66	24.9	29.5
72	19.2	22.7

Approved as complying with the Florida Building Code
Date 03/06/2003
NOA# 02-1107.01
Miami Dade Product Control Division
By Helmy A. Mak

DRAWN BY: W.W.S.	CHECKED BY: W.W.S.
PLOT: 1=8	DATE: 10/31/02

NO.	REVISION DESCRIPTION	BY	DATE

DRAWING TITLE: CF-42 WALL PANEL

MANUFACTURER: METL-SPAN I, LTD.
1497 N. KEALY
LEWISVILLE, TX 75057
972-221-6656

CONSULTANTS: W. W. SCHAEFER ENGINEERING & CONSULTING, P.A.
600 SANDTREE DRIVE; SUITE 203B
PALM BEACH GARDENS, FL 33403
PHONE: 561-775-4902 FAX: 561-775-4903

CERTIFICATION
FEB 06 2003
WARREN W. SCHAEFER, P.E.
P.E. NO. 44135

DRAWING NO. 1180 REV.

SHEET NO. 1 OF 2

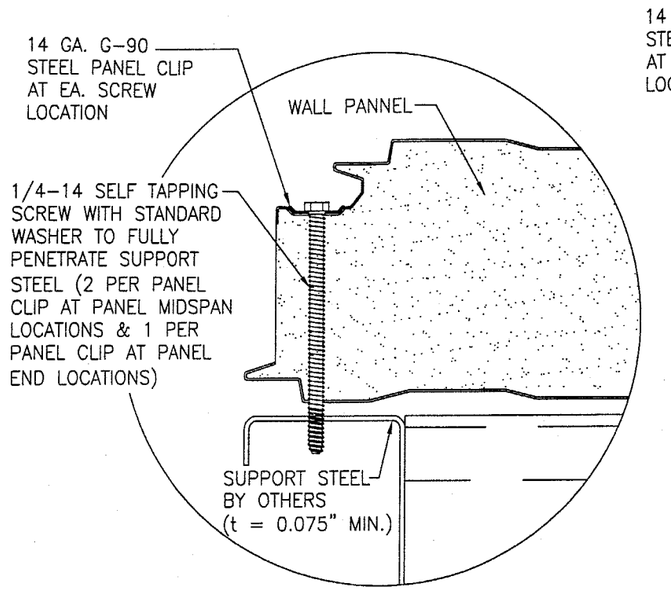

MALE EDGE DETAIL

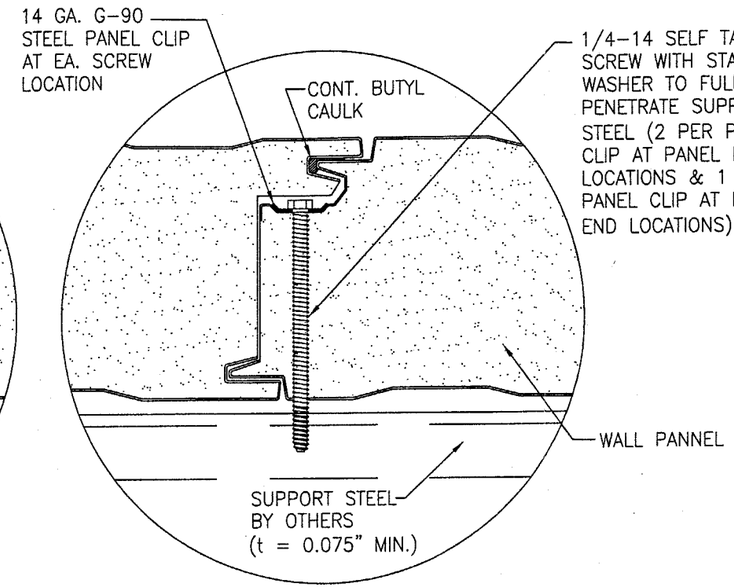

SEAM DETAIL

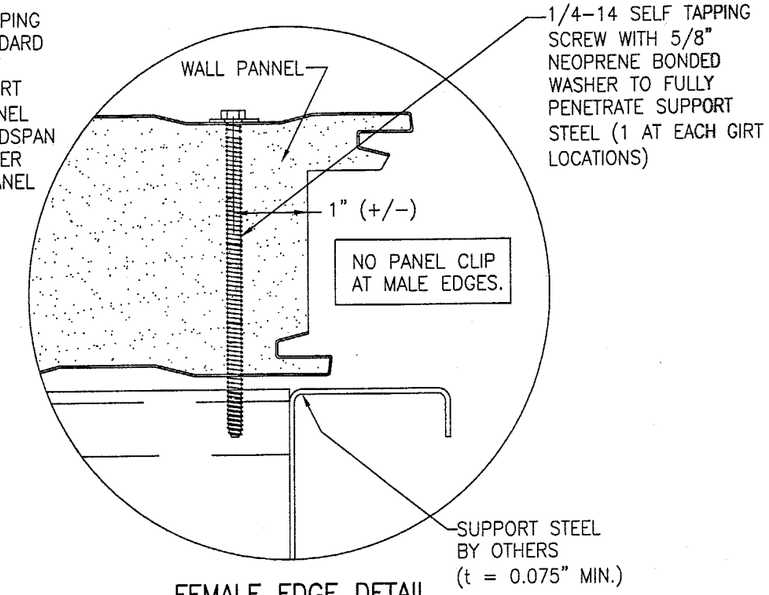

FEMALE EDGE DETAIL

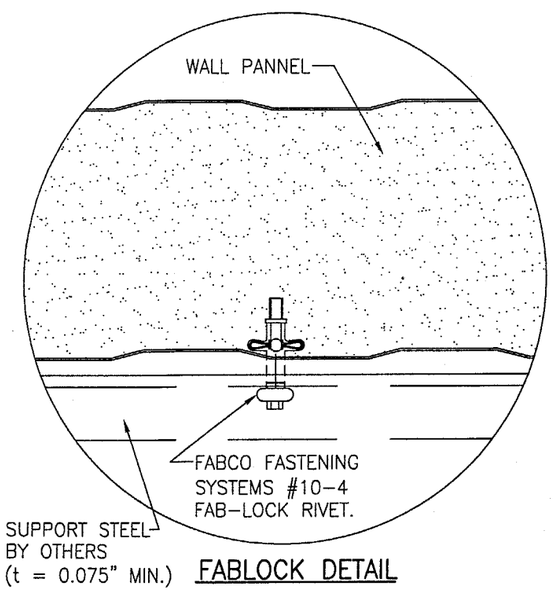

FABLOCK DETAIL

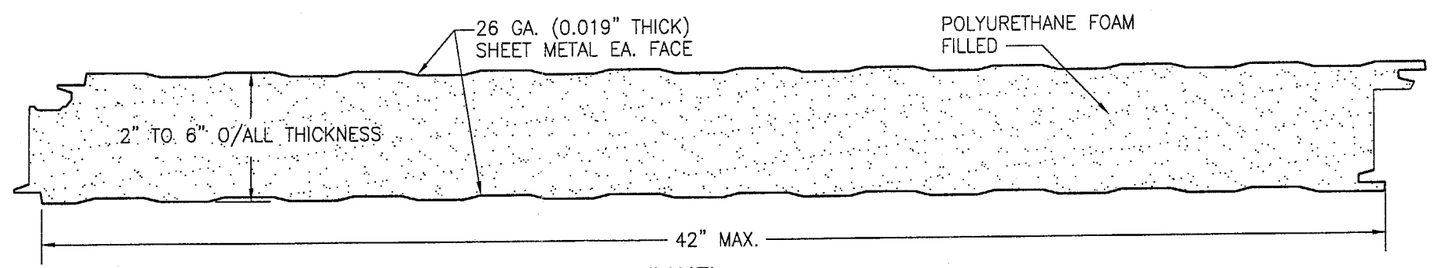

PANEL

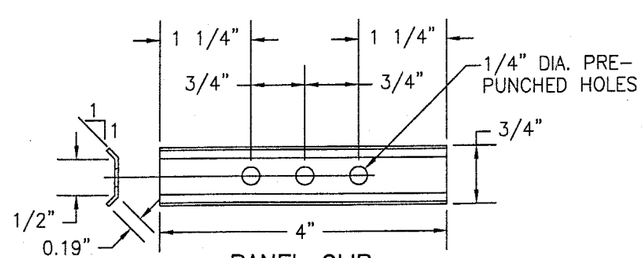

PANEL CLIP
14 GA. (t = 0.075")
33 KSI METAL CLIP

Approved as complying with the Florida Buiding Code
Date 03/06/2003
NOA# 02-1107.01
Miami Dade Product Control Division
By [signature]

DRAWN BY: W.W.S.	CHECKED BY: W.W.S.
PLOT: 1=1	DATE: 10/31/02

NO.	REVISION DESCRIPTION	BY	DATE

MANUFACTURER
METL-SPAN I, LTD.
1497 N. KEALY
LEWISVILLE, TX 75057
972-221-6656

DRAWING TITLE
CF-42 WALL PANEL

CONSULTANTS
W. W. SCHAEFER ENGINEERING & CONSULTING, P.A.
600 SANDTREE DRIVE; SUITE 203B
PALM BEACH GARDENS, FL 33403
PHONE: 561-775-4902 FAX: 561-775-4903

CERTIFICATION
FEB 06 2003
WARREN W. SCHAEFER, P.E.
P.E. NO. 44135

DRAWING NO. 1180
REV.
SHEET NO. 2 OF 2