MIAMI-DADE

BUILDING CODE COMPLIANCE OFFICE (BCCO)
PRODUCT CONTROL DIVISION

MIAMI-DADE COUNTY, FLORIDA
METRO-DADE FLAGLER BUILDING
140 WEST FLAGLER STREET, SUITE 1603
MIAMI, FLORIDA 33130-1563
(305) 375-2901 FAX (305) 375-2908

NOTICE OF ACCEPTANCE (NOA)

Therma-Tru Corporation
1687 Woodlands Drive
Maumee. OH 43537

SCOPE:
This NOA is being issued under the applicable rules and regulations governing the use of construction materials. The documentation submitted has been reviewed by Miami-Dade County Product Control Division and accepted by the Board of Rules and Appeals (BORA) to be used in Miami Dade County and other areas where allowed by the Authority Having Jurisdiction (AHJ).

This NOA shall not be valid after the expiration date stated below. The Miami-Dade County Product Control Division (In Miami Dade County) and/or the AHJ (in areas other than Miami Dade County) reserve the right to have this product or material tested for quality assurance purposes. If this product or material fails to perform in the accepted manner, the manufacturer will incur the expense of such testing and the AHJ may immediately revoke, modify, or suspend the use of such product or material within their jurisdiction. BORA reserves the right to revoke this acceptance, if it is determined by Miami-Dade County Product Control Division that this product or material fails to meet the requirements of the applicable building code.
This product is approved as described herein, and has been designed to comply with the High Velocity Hurricane Zone of the Florida Building Code.

DESCRIPTION: Series "Benchmark" Opaque Outswing Residential Insulated Steel Doors w/Adjusta-Fit Steel Frame

APPROVAL DOCUMENT: Drawing No. **S-2011**, titled "Benchmark Opaque Outswing Steel Door w/Adjusta-Fit Steel Frame", sheets 1 through 5 of 5, prepared by the Rick Wright Building Consulting, Inc., dated 2/25/00 with revision on 3/28/00, bearing the Miami-Dade County Product Control Renewal stamp with the Notice of Acceptance number and expiration date by the Miami-Dade County Product Control Division.

MISSILE IMPACT RATING: Large and Small Missile Impact

LABELING: Each unit shall bear a permanent label with the manufacturer's name or logo, city, state and following statement: "Miami-Dade County Product Control Approved", unless otherwise noted herein.

RENEWAL of this NOA shall be considered after a renewal application has been filed and there has been no change in the applicable building code negatively affecting the performance of this product.

TERMINATION of this NOA will occur after the expiration date or if there has been a revision or change in the materials, use, and/or manufacture of the product or process. Misuse of this NOA as an endorsement of any product, for sales, advertising or any other purposes shall automatically terminate this NOA. Failure to comply with any section of this NOA shall be cause for termination and removal of NOA.

ADVERTISEMENT: The NOA number preceded by the words Miami-Dade County, Florida, and followed by the expiration date may be displayed in advertising literature. If any portion of the NOA is displayed, then it shall be done in its entirety.

INSPECTION: A copy of this entire NOA shall be provided to the user by the manufacturer or its distributors and shall be available for inspection at the job site at the request of the Building Official.
This NOA **renews NOA # 99-1028.03** and, consists of this page 1 as well as approval document mentioned above.
The submitted documentation was reviewed by **Jaime Eisen, P.E.**

PRODUCT CONTROL ACCEPTED

Therma-Tru Corporation

NOTICE OF ACCEPTANCE: EVIDENCE SUBMITTED

(For File ONLY. Not part of NOA)

A. DRAWINGS

1. Manufacturer's die drawings and sections.
2. Drawing No. **S-2011**, titled "Benchmark Opaque Outswing Residential Insulated Steel Doors w/Adjusta-Fit Steel Frame", sheets 1 through 5 of 5, prepared by the Rick Wright Building Consulting, Inc., dated 2/25/00 with revision on 3/28/00.

B. TESTS

Submitted under NOA#99-1028.03

1. Test reports on 1) Air Infiltration Test, per FBC, TAS 202-94
   2) Uniform Static Air Pressure Test, Loading per FBC,TAS 202-94
   3) Water Resistance Test, per FBC, TAS 202-94
   4) Large Missile Impact Test per FBC, TAS 201-94
   5) Cyclic Wind Pressure Loading per FBC, TAS 203-94
   6) Forced Entry Test, per FBC 2411 3.2.1 and TAS 202-94

   along with marked-up drawings and installation diagram of outswing and inswing steel edge opaque residential insulated steel pairs of doors, prepared by Certified Testing Laboratories, Test Report No. **CTLA-469W**, dated February 16, 2000, signed and sealed by Ramesh C. Patel, P.E.

C. CALCULATIONS

Submitted under NOA#99-1028.03

1. Anchor Calculations and structural analysis, dated November 1, 1999 prepared, signed and sealed by Mark Fetherman, P.E.

D. MATERIAL CERTIFICATIONS

Submitted under NOA#99-1028.03

1. Tensile Test prepared by Certified Testing Laboratories, Project No. **CTLA-469W**, dated October 26, 1999, for steel samples referenced DADE 990044, tested per ASTM E8/A370 or B557, signed and sealed by Ramesh C. Patel, P.E.
2. Test report # WHI-495-0920, issued to General Products Company, Inc. for "Two single swing 3' 0" x 7' 0" door and frame assemblies" ASTM E-152, dated August 28, 1988.

E. STATEMENTS

1. Statement letter of no change, prepared by R.W. Building Consultants, Inc., dated 12/22/02.

F. OTHER

1. Notice of Acceptance No. **99-1028.03**, General Products, Co., Inc., Benchmark" Opaque Outswing Residential Insulated Steel Doors w/Adjusta-Fit Steel Frame, approved on 4/21/00 and expiring on 4/21/03.

Jaime Eisen, P.E.
Product Control Examiner
NOA No 03-0109.07
Expiration Date: April 21, 2008
Approval Date: February 20, 2003

BENCHMARK

OUTSWING OPAQUE STEEL DOOR
W/ADJUSTA-STEEL FRAME

GENERAL NOTES

1. THIS PRODUCT IS DESIGNED TO MEET THE SOUTH FLORIDA BUILDING CODE 1994 EDITION FOR MIAMI-DADE COUNTY.
2. WOOD BUCKS BY OTHERS, MUST BE ANCHORED PROPERLY TO TRANSFER LOADS TO THE STRUCTURE.
3. PRODUCT ANCHORS SHALL BE AS LISTED AND SPACED AS SHOWN ON DETAILS. ANCHOR EMBEDMENT TO BASE MATERIAL SHALL BE BEYOND WALL DRESSING OR STUCCO.
4. IMPACT RESISTANT SHUTTERS NOT REQUIRED.
5. THE BARRIER FREE THRESHOLD SYSTEM DOES NOT MEET THE WATER REQUIREMENTS IN MIAMI-DADE COUNTY. THIS SYSTEM WAS TESTED FOR 2.86 lbs. OF WATER PRESSURE AS PER ASTM E331.

DOOR SYSTEM CONSTRUCTION:

DOOR PANEL

A. FACE SHEETS: 24 GA. (.025") MINIMUM THICKNESS, GALVANIZED STEEL A-525 COMMERCIAL QUALITY - AKOQ PER ASTM 620 WITH YIELD STRENGTH FY (MIN.) = 27,000psi

B. CORE DESIGN: POLYURETHANE FOAM (CARPENTER CHEMICAL WITH 2.15 LBS. DENSITY) CORE LAMINATED TO INSIDE FACES.

C. CONSTRUCTION: THE VERTICAL STYLES ARE EXTENSIONS OF THE SKIN, ROLL FORMED TO A MECHANICAL INTERLOCK, HORIZONTAL EDGES ARE WELDED TOGETHER AT TWO PLACES EACH

STEEL FRAME

A. BASE FRAME MATERIAL: 16GA. (.054" MIN. THK.)

B. CLOSURE FRAME MATERIAL: 20GA. (.033" MIN. THK.)

C. THE FRAMES ARE ROLL FORMED AND PRESS BROKE WITH TABS AND SLOTS ON THE HEADERS TO FORM A LOCK.

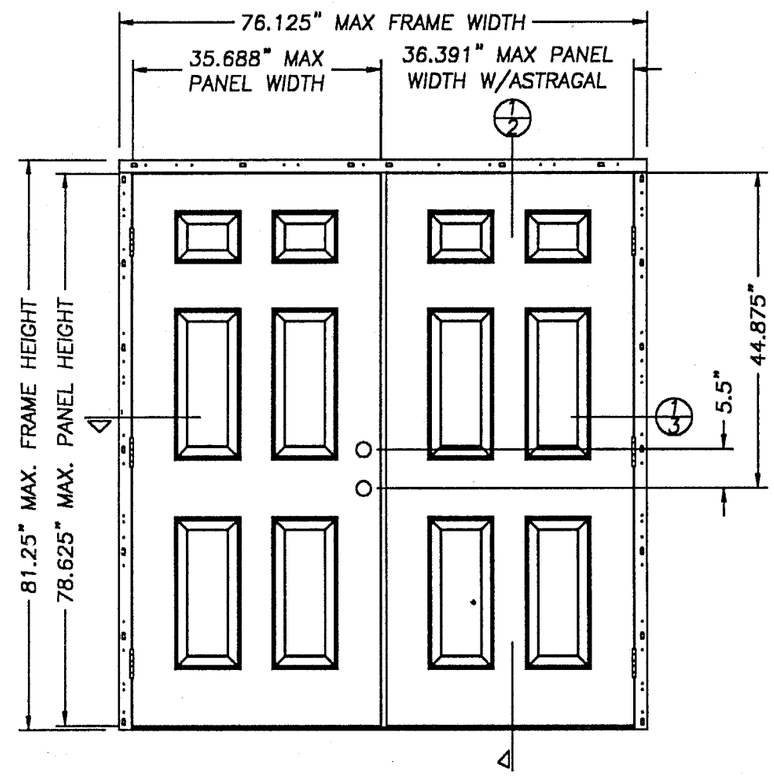

TYPICAL OPAQUE ELEVATION
VIEWED FROM EXTERIOR SIDE

TABLE OF CONTENTS

SHEET #	DESCRIPTION
1	GENERAL NOTES AND ELEVATIONS
2	VERTICAL CROSS SECTIONS
3	HORIZONTAL CROSS SECTION & DOOR MODELS
4	ANCHOR LAYOUT
5	FRAME COMPONENTS & BILL OF MATERIAL

DESIGN PRESSURE RATING

	WHERE WATER INFILTRATION REQUIREMENT IS NEEDED
POSITIVE	+ 60.0 PSF
NEGATIVE	- 60.0 PSF

BARRIER FREE THRESHOLD DOES NOT MEET WATER INFILTRATION REQUIREMENTS FOR MIAMI-DADE COUNTY.

PRODUCT RENEWED
as complying with the Florida Buiding Code
Acceptance No. 03-0109.07
Expiration Date 04/21/08
By
Miami Dade Product Control Division

APPROVED AS COMPLYING WITH THE SOUTH FLORIDA BUILDING CODE
DATE April 21, 2000
BY Manuel Perez
PRODUCT CONTROL DIVISION
BUILDING CODE COMPLIANCE OFFICE
ACCEPTANCE NO. 99-1028.03

GENERAL PRODUCTS CO. INC.
P.O. BOX 7387
FREDERICKSBURG, VA 22404
PH. (540) 898-5700

PRODUCT: BENCHMARK OPAQUE OUTSWING STEEL DOOR W/ ADJUSTA-STEEL FRAME

PART OR ASSEMBLY: ELEVATION & GENERAL NOTES

REVISIONS

NO.	DATE		BY
1	3/28/00	GENERAL	TJH

RW BUILDING CONSULTANTS, INC.
813.684.3831

DATE: 2/25/00
SCALE: N.T.S.
DWG. BY: TJH
CHK. BY: RW
DRAWING NO.: S-2011
SHEET 1 OF 5

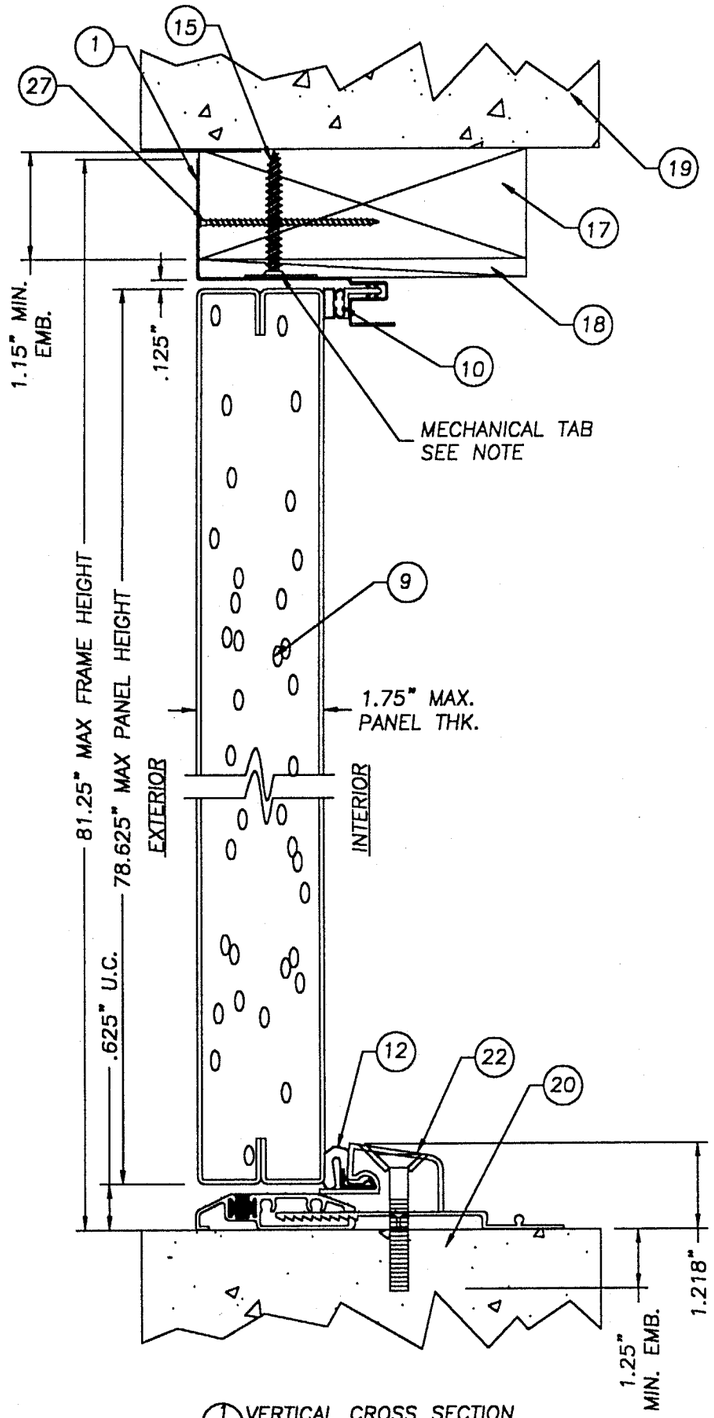

1/2 VERTICAL CROSS SECTION
OPAQUE DOOR
3PIECE ALUM THRESHOLD

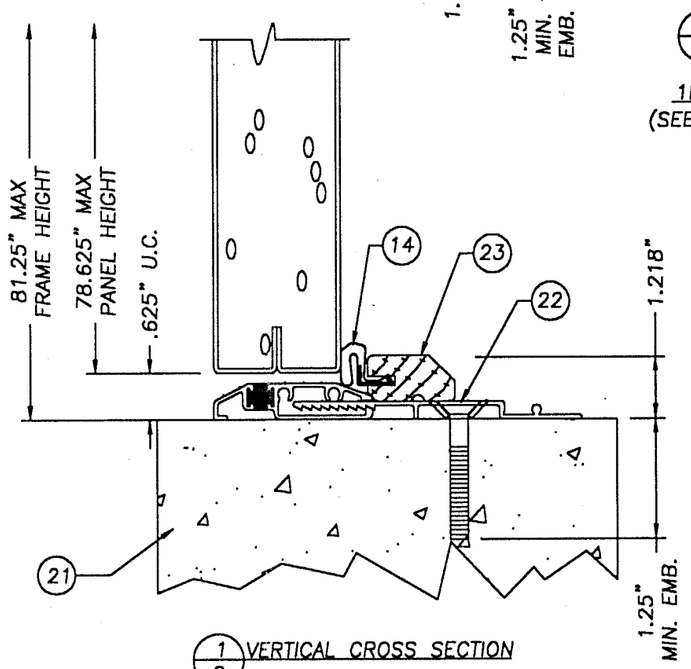

1/2 VERTICAL CROSS SECTION
GLAZED DOOR
3PIECE ALUM/WOOD THRESHOLD

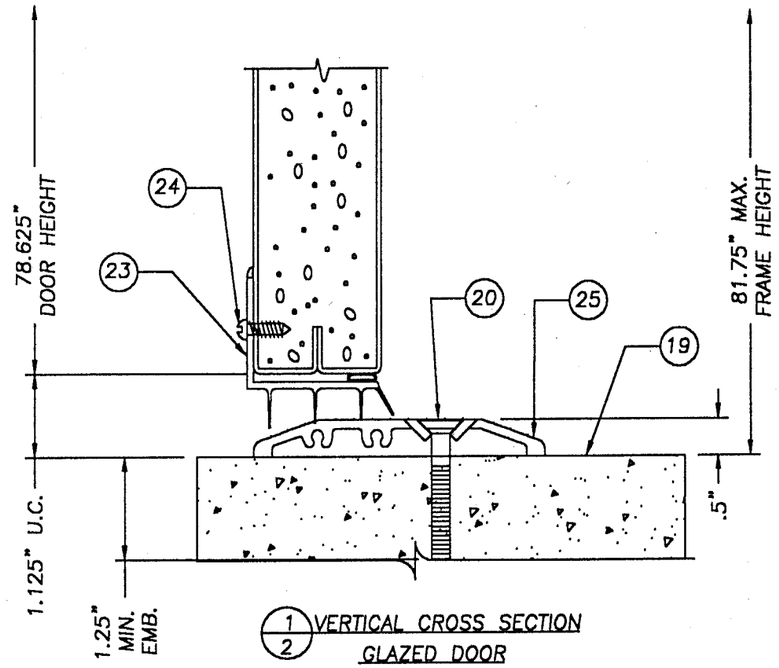

1/2 VERTICAL CROSS SECTION
GLAZED DOOR
1PIECE BARRIER FREE THRESHOLD
(SEE GENERAL NOTES NO. 5 SHEET 1)

NOTES:
1. THE TABS FROM THE SIDE JAMBS ARE INSERTED INTO THE SLOTS OF THE BASE HEADER AND BENT OVER TO FORM A MECHANICAL LOCK.

PRODUCT RENEWED
as complying with the Florida Buiding Code
Acceptance No. 03-0109.07
Expiration Date 04/21/08
By
Miami Dade Product Control Division

APPROVED AS COMPLYING WITH THE SOUTH FLORIDA BUILDING CODE
DATE April 21, 2003
BY
PRODUCT CONTROL DIVISION
BUILDING CODE COMPLIANCE OFFICE
ACCEPTANCE NO. 99-1028.03

GENERAL PRODUCTS CO. INC.
P.O. BOX 7387
FREDERICKSBURG, VA 22404
PH. (540) 898-5700

PRODUCT: BENCHMARK OPAQUE OUTSWING STEEL DOOR W/ ADJUSTA-STEEL FRAME

PART OR ASSEMBLY: VERTICAL CROSS SECTIONS

NO.	DATE	BY
1	3/28/00	TJH

REVISIONS

GENERAL

RW BUILDING CONSULTANTS, INC.
813.684.3831

DATE: 2/25/00
SCALE: N.T.S.
DWG. BY: TJH
CHK. BY: RW
DRAWING NO.: S-2011
SHEET 2 OF 5

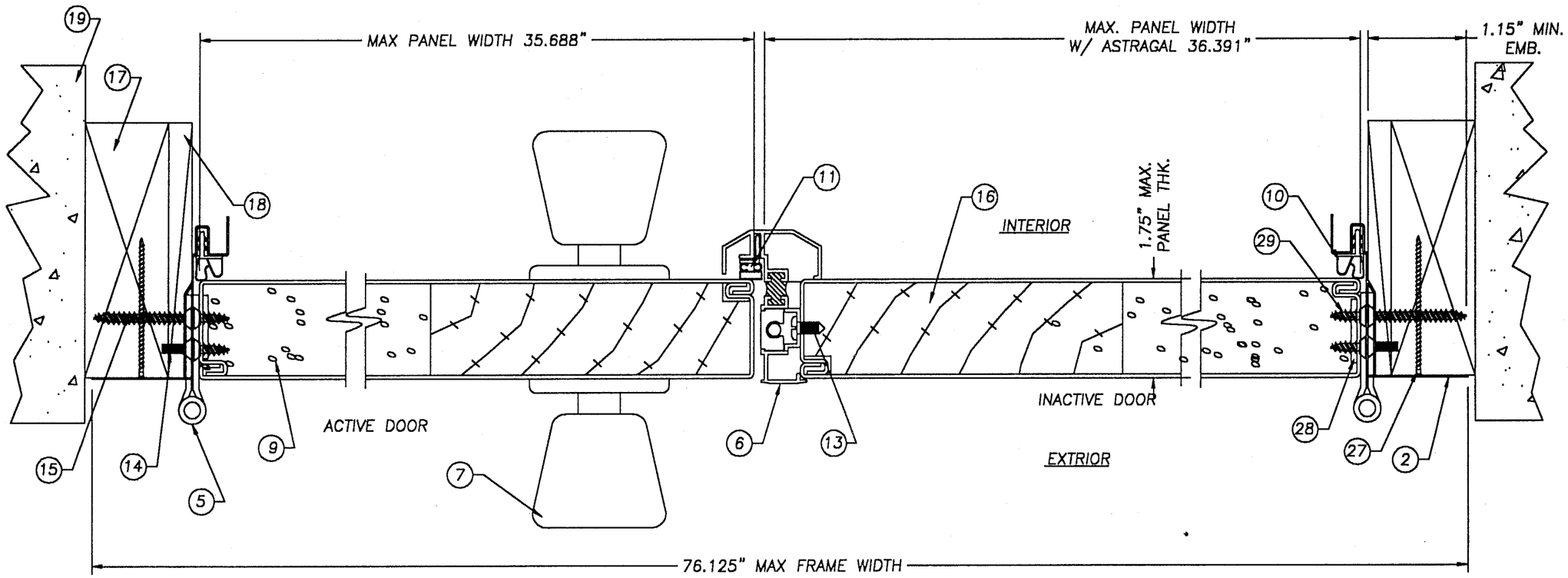

1/3 HORIZONTAL CROSS SECTION
OPAQUE DOOR

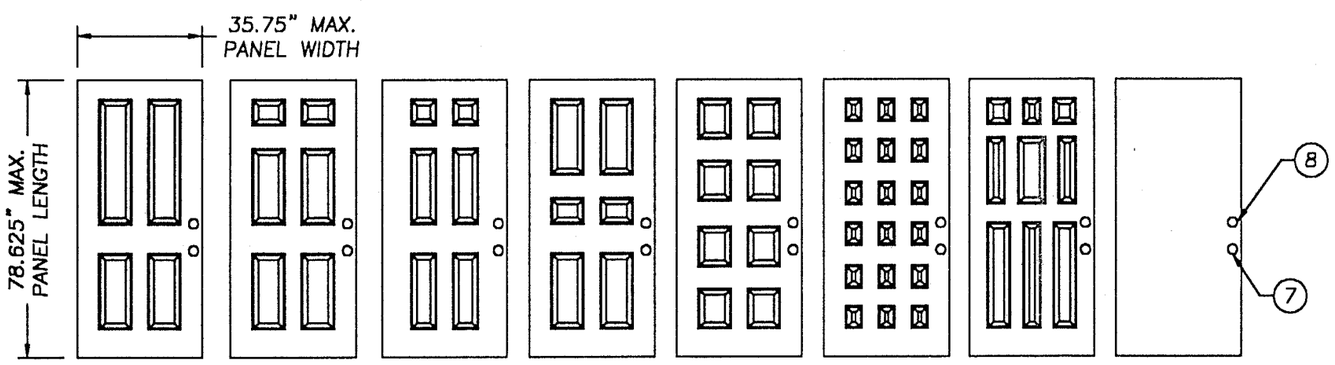

OPAQUE DOOR MODELS

PRODUCT RENEWED
as complying with the Florida Buiding Code
Acceptance No. 03-0109.07
Expiration Date 04/21/08
By
Miami Dade Product Control Division

APPROVED AS COMPLYING WITH THE SOUTH FLORIDA BUILDING CODE
DATE April 21, 2000
BY Manuel Serra
PRODUCT CONTROL DIVISION
BUILDING CODE COMPLIANCE OFFICE
ACCEPTANCE NO. 99-1028.03

GENERAL PRODUCTS CO. INC.
P.O. BOX 7387
FREDERICKSBURG, VA 22404
PH. (540) 898-5700

PRODUCT: BENCHMARK OPAQUE OUTSWING STEEL DOOR W/ ADJUSTA-STEEL FRAME

PART OR ASSEMBLY: HORIZONTAL CROSS SECTIONS & DOOR MODELS

REVISIONS

NO.	DATE		BY
1	3/28/00	GENERAL	TJH

RW BUILDING CONSULTANTS, INC.
813.684.3831

DATE: 2/25/00
SCALE: N.T.S.
DWG. BY: TJH
CHK. BY: RW
DRAWING NO.: S-2011
SHEET 3 OF 5

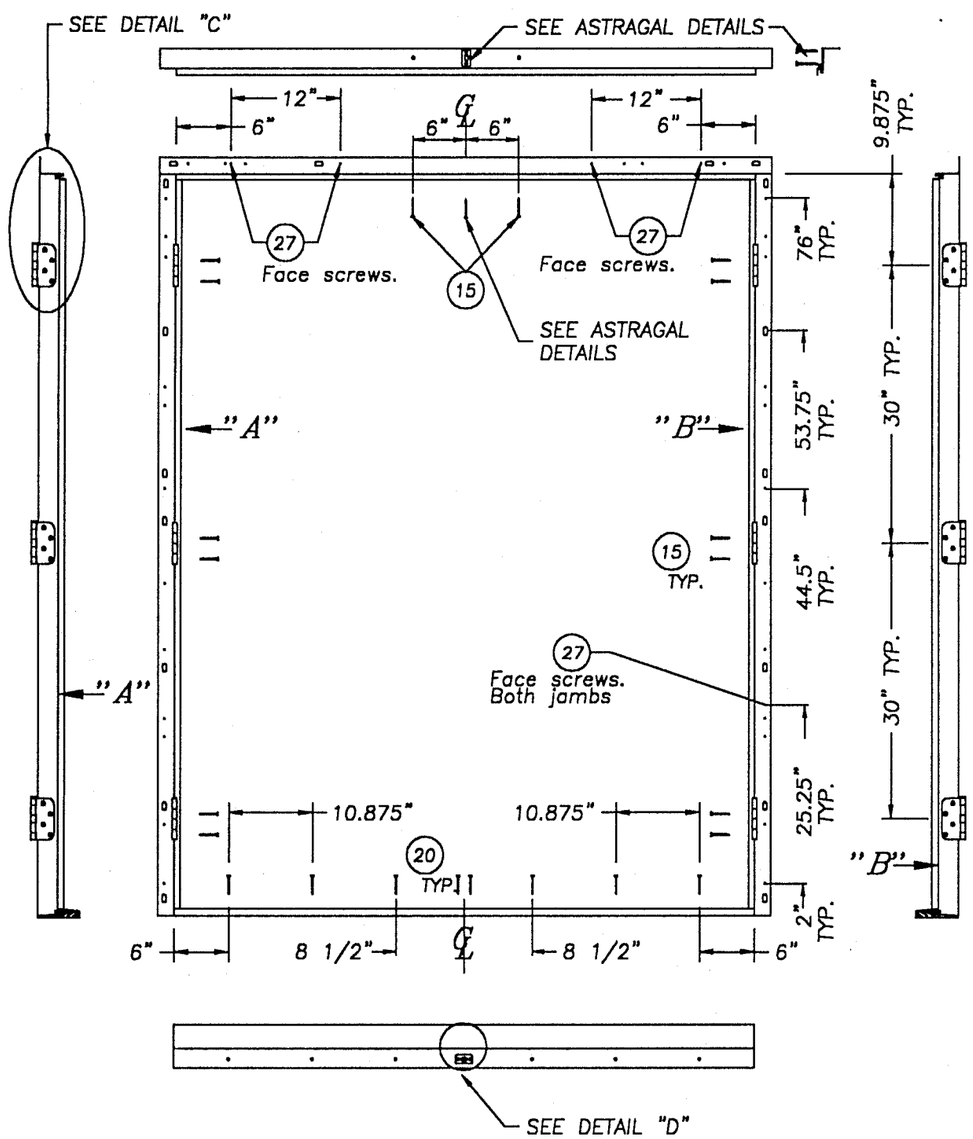

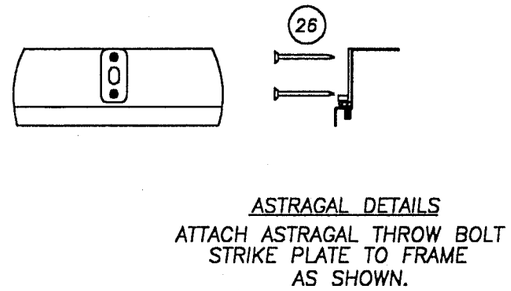

ASTRAGAL DETAILS

ATTACH ASTRAGAL THROW BOLT STRIKE PLATE TO FRAME AS SHOWN.

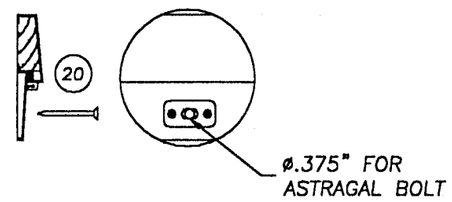

DETAIL "D"

ATTACH ASTRAGAL THROW BOLT STRIKE PLATE TO THRESHOLD AS SHOWN.

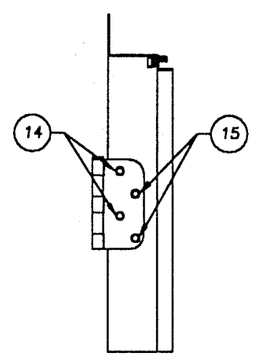

DETAIL "C"

TYP. HINGE DETAIL

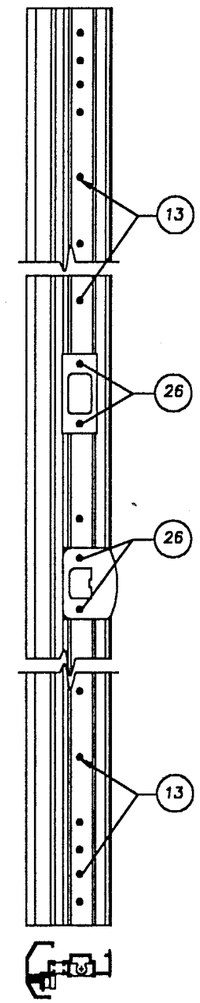

GENERAL PRODUCTS CO. INC.
P.O. BOX 7387
FREDERICKSBURG, VA 22404
PH. (540) 898-5700

PRODUCT: BENCHMARK OPAQUE OUTSWING STEEL DOOR W/ ADJUSTA-STEEL FRAME

PART OR ASSEMBLY: ANCHORING LAYOUT

NO.	DATE	BY
1	3/28/00	TJH

REVISIONS

RW BUILDING CONSULTANTS, INC.
813.684.3831

PRODUCT RENEWED
as complying with the Florida Building Code
Acceptance No. 03-0109.07
Expiration Date 04/21/08
By
Miami Dade Product Control Division

APPROVED AS COMPLYING WITH THE SOUTH FLORIDA BUILDING CODE
DATE April 21, 2000
BY
PRODUCT CONTROL DIVISION
BUILDING CODE COMPLIANCE OFFICE
ACCEPTANCE NO. 99-1028.03

DATE: 2/25/00
SCALE: N.T.S.
DWG. BY: TJH
CHK. BY: RW
DRAWING NO.: S-2011
SHEET 4 OF 5

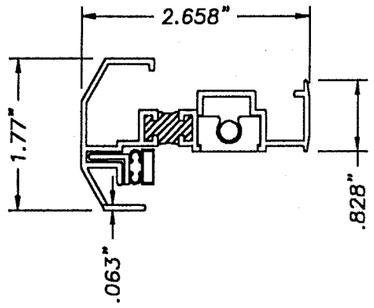

TEE ASTRAGAL

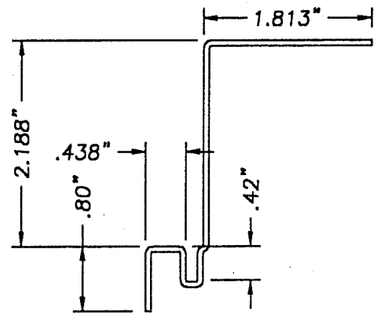

ADJUSTA-STEEL BASE FRAME
W/FLAT FACE
16GA. (.054" MIN.)

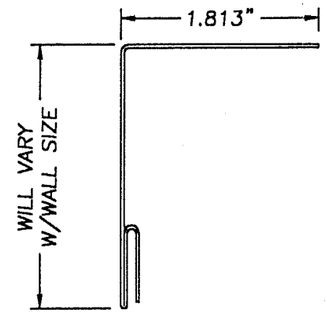

ADJUSTA-STEEL CLOSURE FRAME
W/FLAT FACE
20GA. (.033" MIN.)

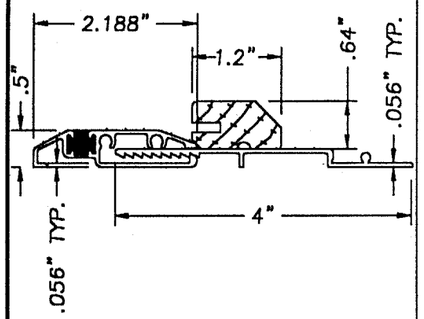

3PIECE OUTSWING BUMP FACE
ALUMINUM/WOOD THRESHOLD
W/WOOD BUMP FACE ADD-ON PART

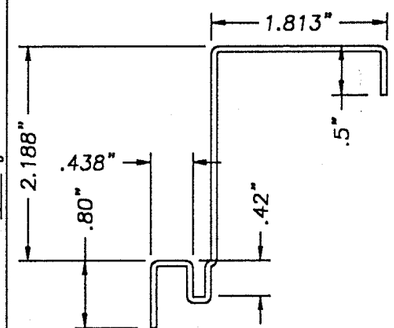

ADJUSTA-STEEL BASE FRAME
W/1/2" RETURN LEG
16GA. (.054" MIN.)

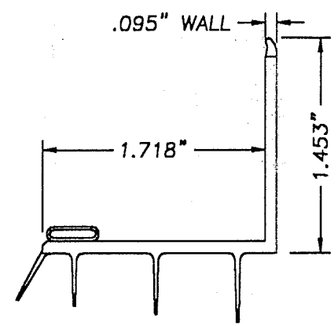

VINYL ADJUSTABLE SWEEP

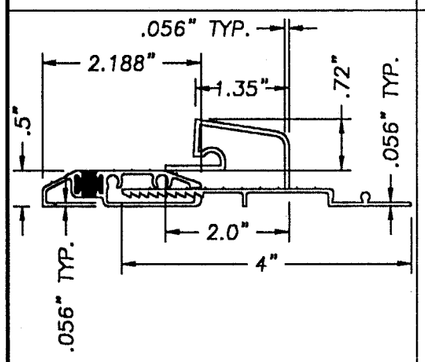

3PIECE OUTSWING BUMP FACE
ALL ALUMINUM THRESHOLD
W/ALUM. BUMP FACE ADD-ON PART

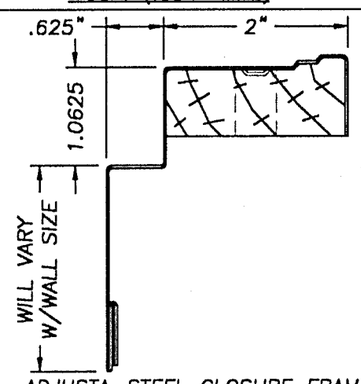

ADJUSTA-STEEL CLOSURE FRAME
W/FORMED BRICK MOLD
20GA. (.033" MIN.)

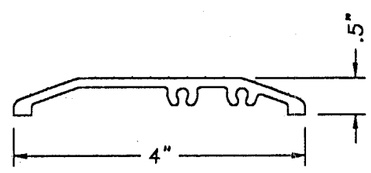

BARRIER FREE THRESHOLD

ITEM	DESCRIPTION	MATERIAL
1	STEEL BASE HEADER (16GA. .054" MIN.)	STEEL
2	STEEL HINGE JAMB (16GA. .054" MIN.)	STEEL
3	STEEL CLOSURE HEADER (20GA. .033" MIN.)	STEEL
4	STEEL CLOSURE JAMB (20GA. .033" MIN.)	STEEL
5	NON-REMOVABLE PIN HINGE BENCHMARK 4" x 4" HINGE PROPRIETARY .097" THK.	STEEL
6	T-ASTRAGAL (.063" WALL THK.)	ALUMINUM
7	KWIKSET 200 DL PASSAGE	–
8	KWIKSET 660 DEADBOLT	–
9	POLYURETHANE FOAM CARPENTER CHEM. 2.15 lbs DENSITY	–
10	COMPRESSION WEATHER STRIPPING	FOAM
11	MAGNETIC WEATHER STRIPPING	VINYL
12	COMPRESSION WEATHER STRIPPING Q-LON QDS 650	FOAM
13	#12 x 1/2" L. SCREW (ASTRAGAL TO DOOR)	STEEL
14	10-24 x 3/8" PHILLIPS FLATHEAD SCREW	STEEL
15	#10 x 1 3/4" L. PHILLIPS FLATHEAD SCREW	STEEL
16	LATCH & DEADBOLT WOOD BLOCK	WOOD
17	2X WOOD (BUCK)	WOOD
18	1/4" MAX. SHIM SPACER	–
19	MASONRY WALL	–
20	3/16" TAPCON ANCHOR (ELCO)	STEEL
21	3PIECE BUMP FACE OUTSWING ALUM./WOOD THRESHOLD	ALUM/WOOD
22	3PIECE BUMP FACE OUTSWING ALUM. THRESHOLD	ALUMINUM
23	ADJUSTABLE SWEEP	VINYL
24	#8 x 1/2" TYPE "AB" PANHEAD SCREW (SWEEP)	STEEL
25	1PIECE BARRIER FREE THRESHOLD	ALUMINUM
26	#8 x 2 1/2" L. PHILLIPS FLATHEAD SCREW	STEEL
27	#6 x 2 1/2" L. PHILLIPS FLATHEAD SCREW	STEEL
28	STEEL HINGE REINFORCEMENT .05" THK. x 1 1/8" W. x 5 5/16" L.	STEEL
29	#10 x 5/8" SCREW (HINGE TO DOOR)	STEEL

GENERAL PRODUCTS CO. INC.
P.O. BOX 7387
FREDERICKSBURG, VA. 22404
PH. (540) 898-5700

PRODUCT: BENCHMARK OPAQUE OUTSWING STEEL DOOR W/ ADJUSTA-STEEL FRAME

PART OR ASSEMBLY: FRAME COMPONANTS & BILL OF MATERIAL

REVISIONS

NO.	DATE	BY
1	3/28/00 GENERAL	TJH

RW BUILDING CONSULTANTS, INC.
813.684.3831

PRODUCT RENEWED
as complying with the Florida Buiding Code
Acceptance No. 03-0109.07
Expiration Date 04/21/08
By
Miami Dade Product Control Division

APPROVED AS COMPLYING WITH THE SOUTH FLORIDA BUILDING CODE
DATE April 21, 2000
BY Manuel Perez
PRODUCT CONTROL DIVISION
BUILDING CODE COMPLIANCE OFFICE
ACCEPTANCE NO. 99-1028.03

DATE: 2/25/00
SCALE: N.T.S.
DWG. BY: TJH
CHK. BY: RW
DRAWING NO.: S-2011
SHEET 5 OF 5