MIAMI-DADE

BUILDING CODE COMPLIANCE OFFICE (BCCO)
PRODUCT CONTROL DIVISION

MIAMI-DADE COUNTY, FLORIDA
METRO-DADE FLAGLER BUILDING
140 WEST FLAGLER STREET, SUITE 1603
MIAMI, FLORIDA 33130-1563
(305) 375-2901 FAX (305) 375-2908

NOTICE OF ACCEPTANCE (NOA)

Lawson Industries, Inc.
8501 NW 90th Street
Medley, FL 33166

SCOPE:
This NOA is being issued under the applicable rules and regulations governing the use of construction materials. The documentation submitted has been reviewed by Miami-Dade County Product Control Division and accepted by the Board of Rules and Appeals (BORA) to be used in Miami Dade County and other areas where allowed by the Authority Having Jurisdiction (AHJ).

This NOA shall not be valid after the expiration date stated below. The Miami-Dade County Product Control Division (In Miami Dade County) and/or the AHJ (in areas other than Miami Dade County) reserve the right to have this product or material tested for quality assurance purposes. If this product or material fails to perform in the accepted manner, the manufacturer will incur the expense of such testing and the AHJ may immediately revoke, modify, or suspend the use of such product or material within their jurisdiction. BORA reserves the right to revoke this acceptance, if it is determined by Miami-Dade County Product Control Division that this product or material fails to meet the requirements of the applicable building code.

This product is approved as described herein, and has been designed to comply with the High Velocity Hurricane Zone of the Florida Building Code.

DESCRIPTION: Series "4000/6000" Aluminum Fixed Window

APPROVAL DOCUMENT: Drawing No. **LTU 4000/6000 Composite,** titled "Series 4000/6000 Aluminum Fixed Window", sheets 1 through 13 of 13, prepared by manufacturer, dated 12/20/02 with revision B-2003, signed and sealed by Thomas J. Sotos, P.E., bearing the Miami-Dade County Product Control Approval stamp with the Notice of Acceptance number and approval date by the Miami-Dade County Product Control Division.

MISSILE IMPACT RATING: None

LABELING: Each unit shall bear a permanent label with the manufacturer's name or logo, city, state and following statement: "Miami-Dade County Product Control Approved", unless otherwise noted herein.

RENEWAL of this NOA shall be considered after a renewal application has been filed and there has been no change in the applicable building code negatively affecting the performance of this product.

TERMINATION of this NOA will occur after the expiration date or if there has been a revision or change in the materials, use, and/or manufacture of the product or process. Misuse of this NOA as an endorsement of any product, for sales, advertising or any other purposes shall automatically terminate this NOA. Failure to comply with any section of this NOA shall be cause for termination and removal of NOA.

ADVERTISEMENT: The NOA number preceded by the words Miami-Dade County, Florida, and followed by the expiration date may be displayed in advertising literature. If any portion of the NOA is displayed, then it shall be done in its entirety.

INSPECTION: A copy of this entire NOA shall be provided to the user by the manufacturer or its distributors and shall be available for inspection at the job site at the request of the Building Official.
This NOA consists of this page 1 as well as approval document mentioned above.
The submitted documentation was reviewed by **Theodore Berman, P.E.**

4/15/03

PRODUCT CONTROL ACCEPTED

NOA No 03-0128.06
Expiration Date: May 08, 2008
Approval Date: May 08, 2003

Lawson Industries, Inc.

NOTICE OF ACCEPTANCE: EVIDENCE SUBMITTED

(For File ONLY. Not part of NOA)

A. DRAWINGS

1. Manufacturer's die drawings and sections.
2. Drawing No. **LTU 4000/6000 Composite,** titled "Series 4000/6000 Aluminum Fixed Window", sheets 1 through 13 of 13, prepared by manufacturer, dated 12/20/02 with revision B-2003, signed and sealed by Thomas J. Sotos, P.E.

B. TESTS

1. Test reports on 1) Air Infiltration Test, per FBC, TAS 202-94
   2) Uniform Static Air Pressure Test, Loading per FBC, TAS 202-94
   3) Water Resistance Test, per FBC, TAS 202-94
   4) Forced Entry Test, per FBC 2411 3.2.1 and TAS 202-94

   along with marked-up drawings and installation diagram of an aluminum fixed window, prepared by Fenestration Testing Laboratory, Inc., Test Report No. FTL 02163 dated 11/27/02, signed and sealed by Joseph Chan, P.E.
2. Test reports on 1)Uniform Static Air Pressure Test, Loading per FBC,TAS 202-94 along with marked-up drawings and installation diagram of an aluminum fixed window, prepared by Fenestration Testing Laboratory, Inc., Test Report No. FTL 02164 dated 11/27/02, signed and sealed by Joseph Chan, P.E.
3. Test reports on 1) Air Infiltration Test, per FBC, TAS 202-94
   2) Uniform Static Air Pressure Test, Loading per FBC, TAS 202-94
   3) Water Resistance Test, per FBC, TAS 202-94
   4) Forced Entry Test, per FBC 2411 3.2.1 and TAS 202-94

   along with marked-up drawings and installation diagram of an aluminum fixed window, prepared by Fenestration Testing Laboratory, Inc., Test Report No. FTL 02166 dated 11/27/02, signed and sealed by Joseph Chan, P.E.

C. CALCULATIONS

1. Anchor Calculations and structural analysis, prepared by manufacturer, dated 1/21/03, signed and sealed by Thomas J. Sotos, P.E.

D. MATERIAL CERTIFICATIONS

1. None

Theodore Berman, P.E.
Deputy Director, Product Control Division
NOA No 03-0128.06
Expiration Date: May 08, 2008
Approval Date: May 08, 2003

Lawson Industries, Inc.

NOTICE OF ACCEPTANCE: EVIDENCE SUBMITTED
(For File ONLY. Not part of NOA)

E. STATEMENTS

1. Statement letter of conformance, dated 1/6/03, signed and sealed by Thomas J. Sotos, P.E.
2. Statement letter of no financial interest, dated 1/6/03, signed and sealed by Thomas J. Sotos, P.E.
3. Laboratory compliance letter for Test Report no. FTL-02163, issued by Fenestration Testing Laboratory, Inc., dated 12/3/02, signed and sealed by Joseph Chan, P.E.
4. Laboratory compliance letter for Test Report no. FTL-02164, issued by Fenestration Testing Laboratory, Inc., dated 12/3/02, signed and sealed by Joseph Chan, P.E.
5. Laboratory compliance letter for Test Report no. FTL-02166, issued by Fenestration Testing Laboratory, Inc., dated 12/3/02, signed and sealed by Joseph Chan, P.E.

F. OTHER

1. Letter from the consultant stating that the product is in compliance with the Florida Building Code (FBC).

Theodore Berman, P.E.
Deputy Director, Product Control Division
NOA No 03-0128.06
Expiration Date: May 08, 2008
Approval Date: May 08, 2003

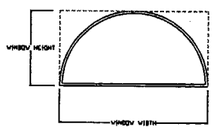

HALF-ROUND TYPICAL ELEVATION

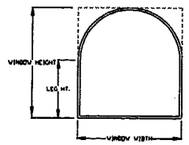

ARCHED PICTURE WINDOW

LEGGED EYE BROW ELEVATION

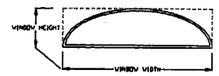

"ELLIPTICAL" TYPICAL ELEVATION

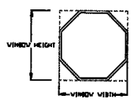

OCTAGON TYPICAL ELEVATION

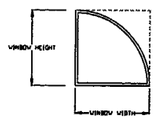

QUARTER-ROUND ELEVATION

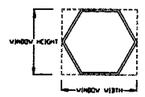

HEXAGON TYPICAL ELEVATION

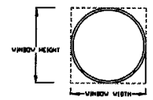

FULL ROUND TYPICAL ELEVATION

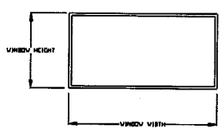

RECTANGULAR TYPICAL ELEVATION

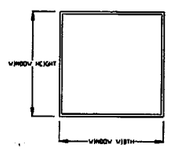

SQUARE PICTURE WINDOW ELEVATION

ALLOWABLE LOADS FOR ALTERNATE SHAPES AS SHOWN, CAN BE VERIFIED BY INSCRIBING PICTURE WINDOW SHAPE WITHIN A SQUARE OR RECTANGLE, AS SHOW IN DOTTED LINES AND OBTAINING ALLOWABLE LOADS FROM THOSE SHAPES. PROVIDED PERIMETER FASTENERS ARE AS DESCRIBED HEREIN FOR SIZE AND SPACING.

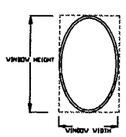

OVAL TYPICAL ELEVATION

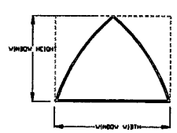

QUARTER-ROUND ELEVATION

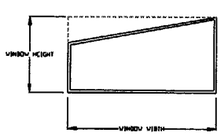

RECTANGULAR TYPICAL ELEVATION

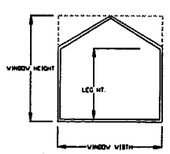

SQUARE PICTURE WINDOW ELEVATION

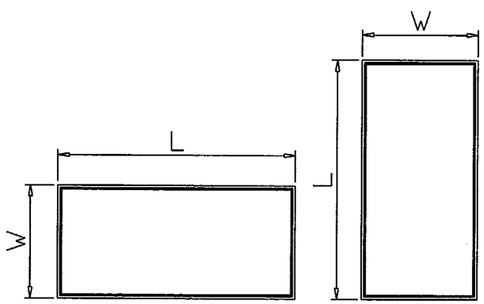

NOTE:
WIDTH AND LENGTH DIMENSIONS CAN BE ORIENTED VERTICALLY OR HORIZONTALLY AS SHOWN ABOVE.

NOTES:
1.) THIS PRODUCT IS DESIGNED TO COMPLY WITH THE HIGH VELOCITY HURRICANE ZONE OF THE 2001 FLORIDA BUILDING CODE, TO INCLUDE ASTM 1300-94 GLASS CAPACITIES.
2.) WOOD BUCKS BY OTHERS MUST BE ANCHORED PROPERLY TO TRANSFER LOADS TO THE STRUCTURE
3.) ANCHOR EMBEDMENT TO BASE MATERIAL SHALL BE BEYOND WALL DRESSING OR STUCCO.

WINDOWS TO BE PROTECTED WITH DADE COUNTY APPROVED IMPACT RESISTANT SHUTTERS

SEALANT:
FRAME CORNERS, OR JOINTS SEALED WITH A COLORED SEALANT AND PERIMETER OF GLAZING BEAD WITH CLEAR SILICONE

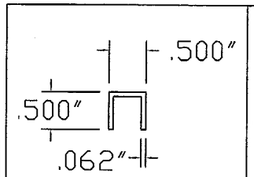

L-6002 ALUM GLAZING BEAD

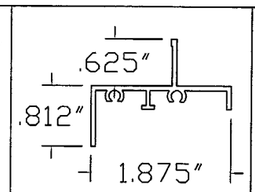

L-6001 FLANGE FRAME

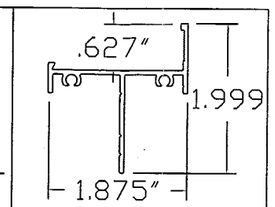

L-6003 FIN FRAME

Approved as complying with the Florida Buiding Code
Date 05/08/03
NOA# 03-0128.06
Miami Dade Product Control Division
By Claudine Bauman

THOMAS J. SOTOS
PROFESSIONAL ENGINEER
FL LIC. # 55225

DATE JAN 21 2003

Revision Notes:

Drawn By: Larry Magee
Date Drawn: 12/20/2002
Scale: AS NOTED

LAWSON INDUSTRIES, INC.
8501 NW 90th St.
MEDLEY, FLORIDA 33166
(305) 696-8660

MANUFACTURER OF QUALITY ALUMINUM WINDOWS AND GLASS DOORS

Draw Class:	Part Class:	Prod Category:	Series/Model:	Item:	Sheet:
LAYOUT					1 of 13

SERIES: 4000/6000 ALUMINUM FIXED WINDOWS
FLANGE & FIN FRAME WINDOW DETAILS, ELEVATIONS, SHAPES & GENERAL INSTALLATION NOTES.

Part Number:
Drawing Number: LTU 4000/6000 COMPOSITE
Revision Level: B 2003

4/121

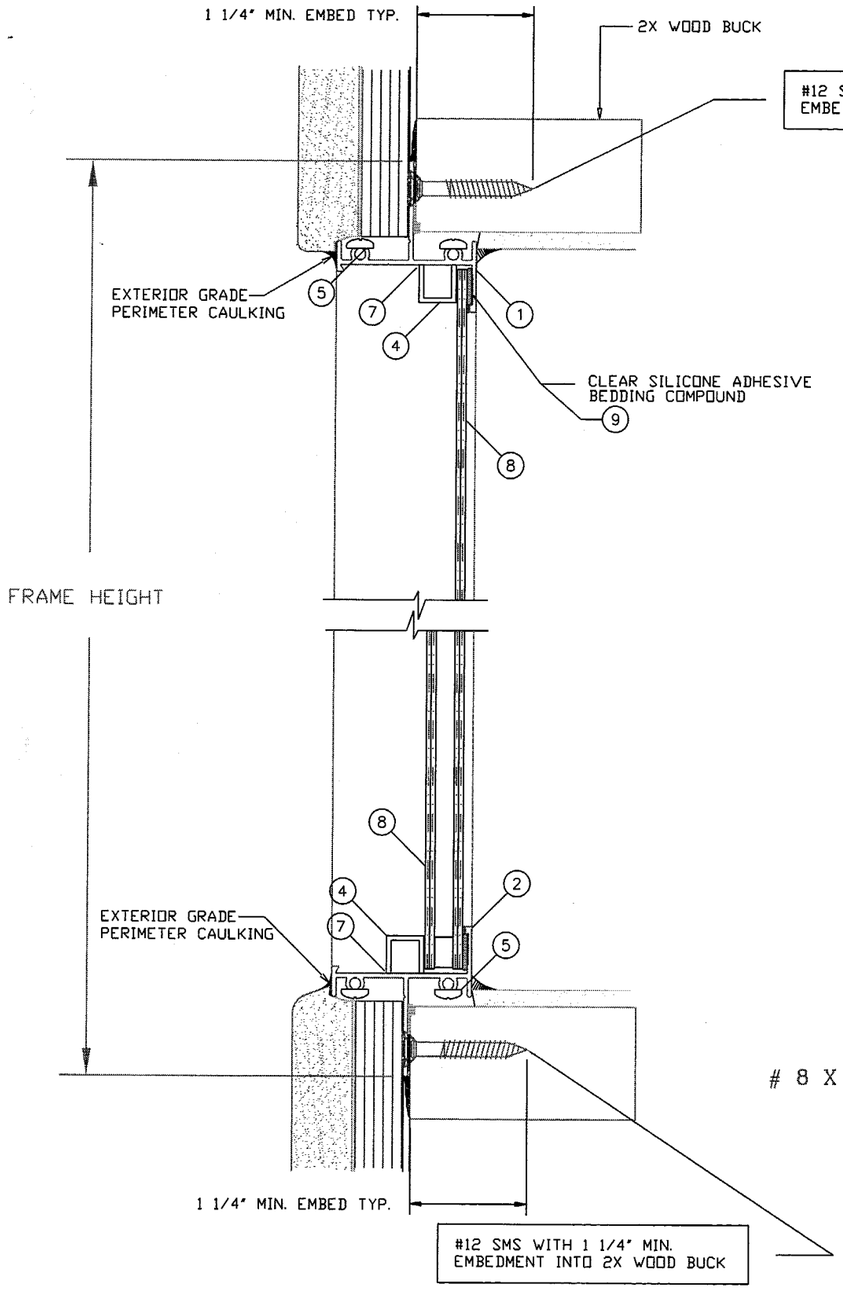

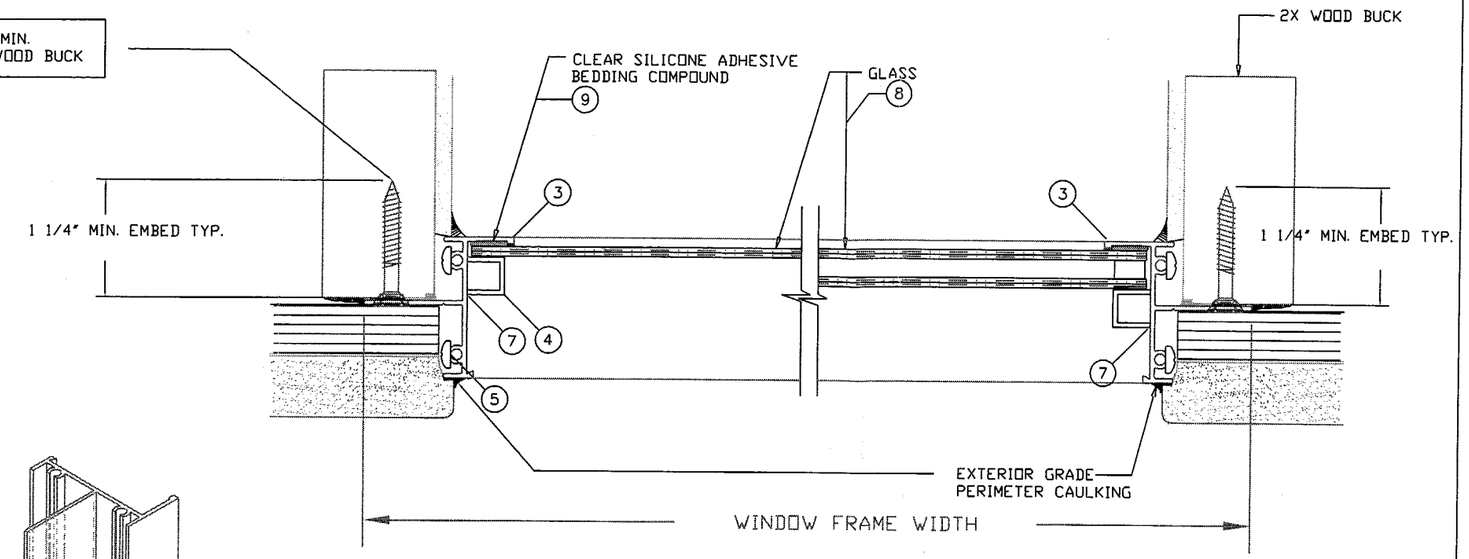

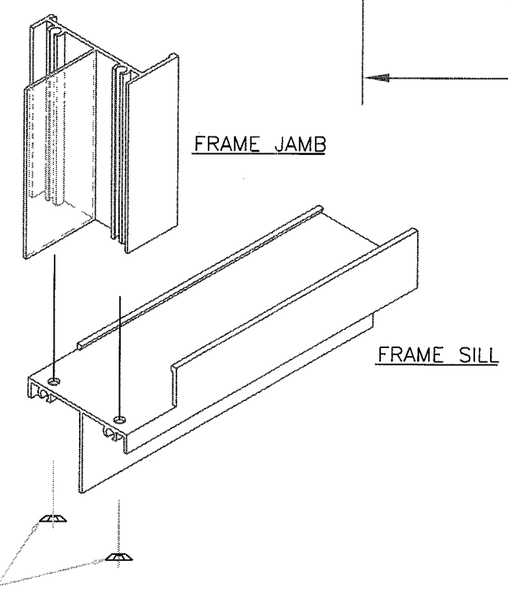

FIN FRAME CORNER DETAIL

Approved as complying with the Florida Building Code
Date 05/08/03
NOA# 03-0128.06
Miami Dade Product Control Division
By: Claudio German

REFER TO SHEET # 1 OF 11 FOR GENERAL NOTES

BILL OF MATERIALS

ITEM #	PART #	REQD.	DESCRIPTION	REMARKS
1	L-6003	1	FRAME HEAD	6063-T5 ALUMINUM
2	L-6003	1	FRAME SILL	6063-T5 ALUMINUM
3	L-6003	2	FRAME JAMB	6063-T5 ALUMINUM
4	L-6002	AS REQ'D.	ALUM. GLAZING BEAD	6063-T5 ALUMINUM
5	FS-006	AS REQ'D.	FRAME ASSEMBLY SCREWS	#8 X 3/4" P.H. PHILLIPS
6	*	AS REQD.	INSTALLATION SCREWS	#12 SMS X 1 1/2" F.H./PHIL
7	*	AS REQ'D.	JOINT SEALANT	"Purvis Co." Super Seal
8	*	1	GLASS	SEE CHART
9	*	AS REQ'D.	NEUTRAL CURE SILICONE	SM -5731 IR DC-899

THOMAS J. SOTOS
PROFESSIONAL ENGINEER
FL LIC. # 55225

JAN 21 2003
DATE_____

Revision Notes:

Drawn By: Larry Magee
Date Drawn: 12/20/2002
Scale: AS NOTED

LAWSON INDUSTRIES, INC.
8501 NW 90th St.
MEDLEY, FLORIDA 33166
(305) 696-8660

MANUFACTURER OF QUALITY ALUMINUM WINDOWS AND GLASS DOORS

Draw Class:	Part Class:	Prod Category:	Series/Model:	Item:	Sheet:
LAYOUT					2 of 13

SERIES: 4000/6000 ALUMINUM FIXED WINDOWS
FIN FRAME WINDOW INSTALLATION DETAILS, B.O.M. & NOTES

5/21

Part Number:
Drawing Number: LTU 4000/6000 COMPOSITE
Revision Level: B 2003

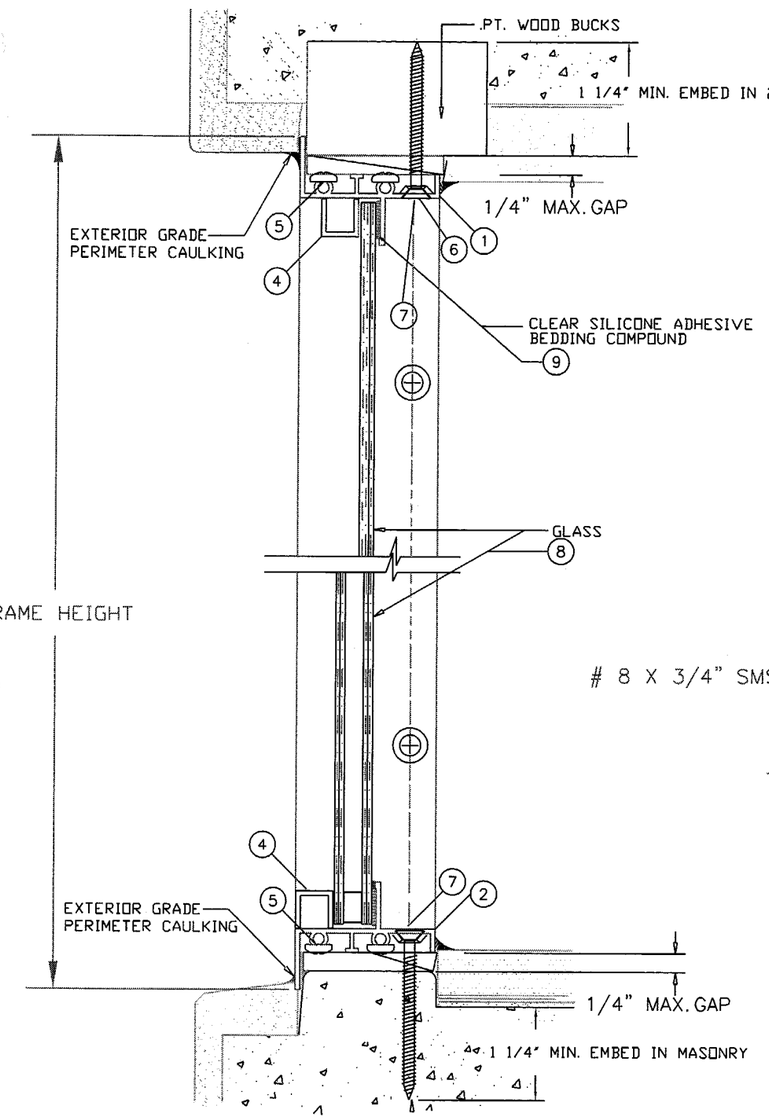

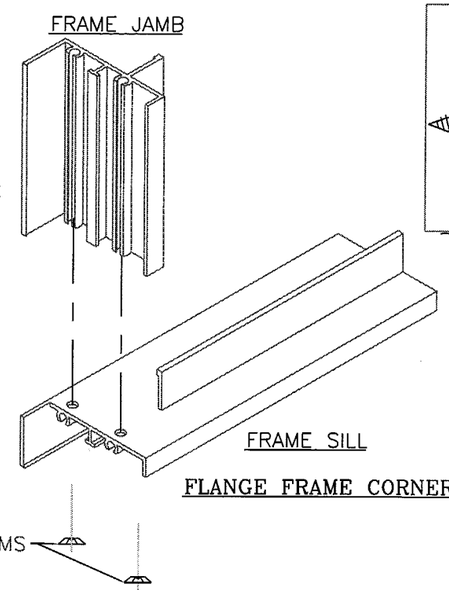

FLANGE FRAME CORNER DETAIL

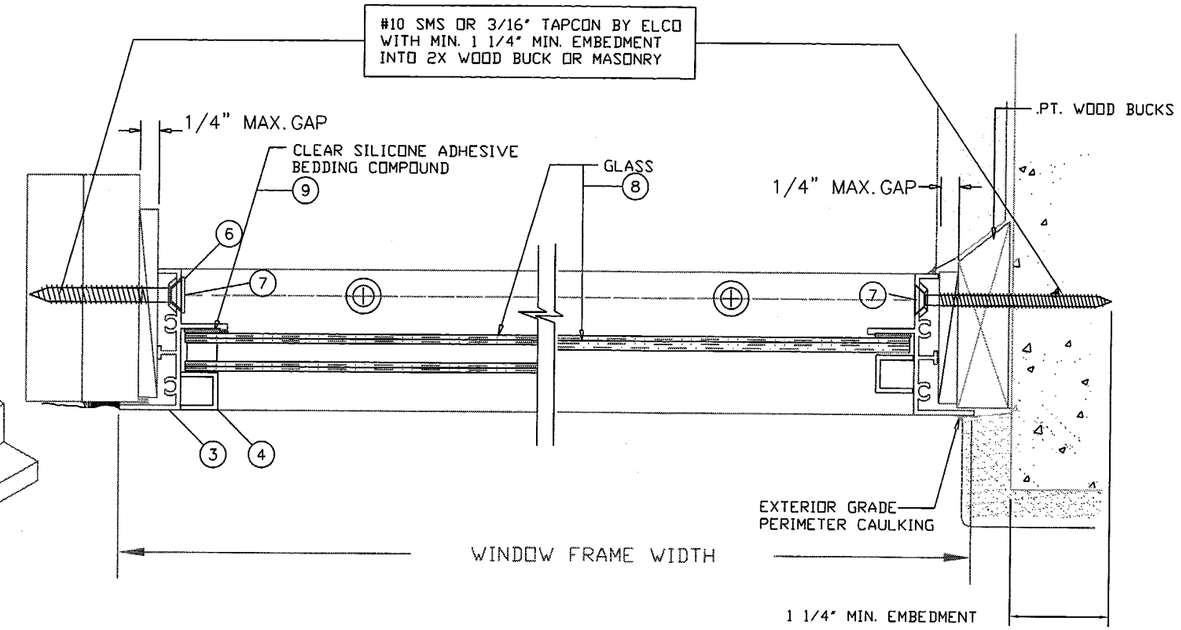

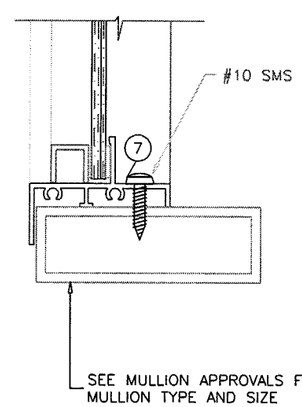

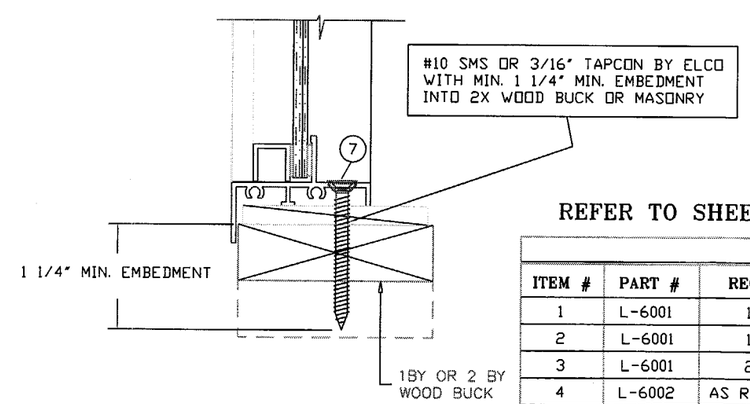

FLANGE FRAME OPTIONAL DETAILS

Approved as complying with the Florida Buiding Code
Date 05/08/03
NOA# 03-0128.06
Miami Dade Product Control Division
By

REFER TO SHEET # 1 OF 11 FOR GENERAL NOTES

BILL OF MATERIALS

ITEM #	PART #	REQD.	DESCRIPTION	REMARKS
1	L-6001	1	FRAME HEAD	6063-T5 ALUMINUM
2	L-6001	1	FRAME SILL	6063-T5 ALUMINUM
3	L-6001	2	FRAME JAMB	6063-T5 ALUMINUM
4	L-6002	AS REQ'D.	ALUM. GLAZING BEAD	6063-T5 ALUMINUM
5	FS-006	AS REQ'D.	FRAME ASSEMBLY SCREWS	#8 X 3/4" P.H. PHILLIPS
6	*	AS REQD.	INSTALLATION SCREWS	#10 SMS OR 3/16" TAPCON
7	*	AS REQ'D.	JOINT SEALANT	"Purvis Co." Super Seal
8	*	1	GLASS	SEE CHART
9	*	AS REQ'D.	NEUTRAL CURE SILICONE	SM-5731 OR DC-899

THOMAS J. SOTOS
PROFESSIONAL ENGINEER
FL LIC. # 55225

JAN 21 2003
DATE_____

Revision Notes:

Drawn By: Larry Magee
Date Drawn: 12/20/2002
Scale: AS NOTED

LAWSON INDUSTRIES, INC.
8501 NW 90th St.
MEDLEY, FLORIDA 33166
(305) 696-8660

MANUFACTURER OF QUALITY ALUMINUM WINDOWS AND GLASS DOORS

Draw Class:	Part Class:	Prod Category:	Series/Model:	Item:	Sheet:
LAYOUT					3 of 13

SERIES: 4000/6000 ALUMINUM FIXED WINDOWS
FLANGE FRAME WINDOW INSTALLATION DETAILS, B.O.M. & NOTES

6/21

Part Number:
Drawing Number: LTU 4000/6000 COMPOSITE
Revision Level: B 2003

WINDOW COMPARATIVE ANALYSIS CHART FOR 1/4" TEMPERED					
		FIN FRAME		DESIGN LOAD CAPACITY - (PFS)	
HEIGHT INCHES	WIDTH INCHES	QTY OF ANCHORS	AVG. ANCHOR SPACING (IN)	POSITIVE	NEGATIVE
24	18	9	9	120.0	210.0
36	18	14	7	120.0	210.0
48	18	18	7	120.0	210.0
60	18	23	6	120.0	210.0
72	18	27	6	120.0	210.0
84	18	32	6	120.0	210.0
96	18	36	6	120.0	210.0
108	18	41	6	120.0	210.0
120	18	45	6	120.0	210.0
132	18	43	6	120.0	180.0
144	18	39	8	120.0	150.0
148	18	37	8	120.0	139.0
156	18	35	9	120.0	123.0
24	24	12	8	120.0	210.0
36	24	18	6	120.0	210.0
48	24	23	6	120.0	196.0
60	24	27	6	120.0	183.7
72	24	31	6	120.0	176.4
84	24	35	6	120.0	171.5
96	24	39	6	120.0	168.0
108	24	43	6	120.0	165.4
120	24	47	6	120.0	163.3
132	24	51	6	120.0	161.7
144	24	51	6	120.0	147.0
148	24	49	7	120.0	139.0
156	24	46	7	120.0	122.0
24	30	15	7	120.0	210.0
36	30	22	6	120.0	201.6
48	30	25	6	120.0	171.0
60	30	28	6	120.0	156.8
72	30	32	6	120.0	148.5
84	30	36	6	120.0	143.1
96	30	40	6	120.0	139.4
108	30	44	6	120.0	136.5
120	30	48	6	120.0	134.4
132	30	53	6	120.0	132.7
144	30	57	6	120.0	131.3
148	30	58	6	120.0	130.8
156	30	57	6	120.0	122.0
24	36	18	6	120.0	210.0
36	36	26	5	120.0	196.0
48	36	27	6	120.0	156.8
60	36	30	6	120.0	140.0
72	36	34	6	120.0	130.6
84	36	38	6	120.0	124.7
96	36	42	6	120.0	120.6
108	36	46	6	117.6	117.6
120	36	50	6	115.0	115.0
132	36	53	6	111.0	111.0
144	36	56	6	108.0	108.0
148	36	57	6	107.0	107.0
156	36	59	6	105.0	105.0
24	48	23	6	120.0	196.0
36	48	27	6	120.0	156.8
48	48	34	5	120.0	147.0
60	48	35	6	120.0	122.5
72	48	38	6	110.2	110.2
84	48	42	6	102.9	102.9
96	48	44	6	94.8	94.8
108	48	42	7	81.2	81.2
120	48	42	8	73.3	73.3
132	48	42	8	66.8	66.8
144	48	43	8	62.2	62.2
148	48	44	8	61.4	61.4
156	48				

WINDOW COMPARATIVE ANALYSIS CHART FOR 1/4" TEMPERED					
		FIN FRAME		DESIGN LOAD CAPACITY - (PFS)	
HEIGHT INCHES	WIDTH INCHES	QTY OF ANCHORS	AVG. ANCHOR SPACING (IN)	POSITIVE	NEGATIVE
24	60	27	6	120.0	183.7
36	60	30	6	120.0	140.0
48	60	35	6	120.0	122.5
60	60	42	5	117.6	117.6
72	60	44	6	100.8	100.8
84	60	46	6	91.5	91.5
96	60	49	6	85.5	85.5
108	60	51	6	78.8	78.8
120	60	49	7	68.4	68.4
132	60				
144	60				
148	60				
156	60				
24	72	31	6	120.0	176.4
36	72	34	6	120.0	130.6
48	72	38	6	110.2	110.2
60	72	44	6	100.8	100.8
72	72	51	5	98.0	98.0
84	72	52	6	85.7	85.7
96	72	54	6	78.4	78.4
108	72				
120	72				
132	72				
144	72				
148	72				
156	72				
24	84	35	6	120.0	171.5
36	84	38	6	120.0	124.7
48	84	42	6	102.9	102.9
60	84	46	6	91.5	91.5
72	84	52	6	85.7	85.7
84	84	59	5	84.0	84.0
96	84				
108	84				
120	84				
132	84				
144	84				
148	84				
156	84				
19.125	26	11	8	120.0	210.0
26.5	26	15	7	120.0	210.0
37	26	20	6	120.0	209.2
53.125	26	25	6	120.0	179.6
19.125	38.375	16	7	120.0	210.0
26.5	38.375	21	6	120.0	203.3
37	38.375	26	5	120.0	184.1
53.125	38.375	30	6	120.0	143.9
19.125	50.625	21	6	120.0	210.0
26.5	50.625	24	6	120.0	180.3
37	50.625	28	6	120.0	150.2
53.125	50.625	36	5	120.0	133.1
19.125	58	24	6	120.0	210.0
26.5	58	27	6	120.0	172.5
37	58	30	6	120.0	140.0
53.125	58	38	5	120.0	122.5
19.125	63	26	6	120.0	210.0
26.5	63	28	6	120.0	168.6
37	63	32	6	120.0	135.0
53.125	63	39	5	114.8	114.8
19.125	74.25	30	6	120.0	210.0
26.5	74.25	32	6	120.0	162.0
37	74.25	35	6	120.0	127.0
53.125	74.25	41	6	103.4	103.4

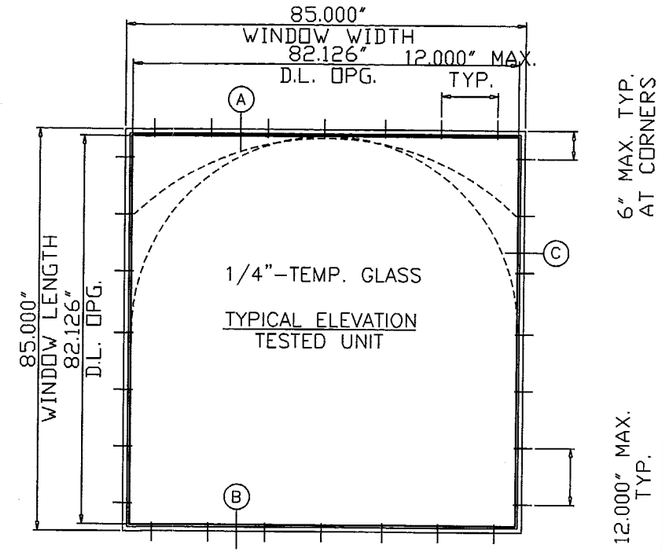

UNIT PERFORMANCE DATA

REPORT #FTL-3619

TEST SIZE = 85" wide X 85" hi (O)
DESIGN LOADS = +104.0, -104.0 PSF (PA-202)
STRUCTURAL TEST LOAD = +156.0, -156.0 PSF
WATER INFILTRATION TEST = 18.0 PSF
DAYLIGHT OPENING = 82 1/8" wide X 82 1/8" hi
TESTED GLASS = 1/4" TEMPERED GLASS

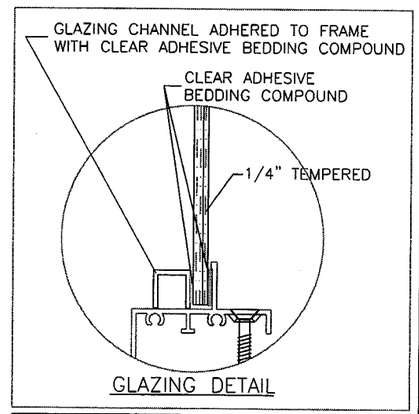

Approved as complying with the
Florida Buiding Code
Date 05/08/03
NOA# 03-0128.06
Miami Dade Product Control
Division
By Gheordan Lawson

WINDOWS TO BE PROTECTED WITH DADE COUNTY APPROVED IMPACT RESISTANT SHUTTERS

FLANGE FRAME ANCHORS ARE TO BE SPACED NOT GREATER THAN 6" FROM EACH CORNER, AND NOT GREATER THAN 10" CENTER TO CENTER. FIN FRAME ANCHORS SPACED AS TABULATED ABOVE.

THOMAS J. SOTOS
PROFESSIONAL ENGINEER
FL LIC. # 55225

JAN 21 2003

DATE_____

Revision Notes:

Drawn By: Larry Magee
Date Drawn: 12/20/2002
Scale: AS NOTED

LAWSON INDUSTRIES, INC.
8501 NW 90th St.
MEDLEY, FLORIDA 33166
(305) 696-8660

MANUFACTURER OF QUALITY ALUMINUM WINDOWS AND GLASS DOORS

Draw Class:	Part Class:	Prod Category:	Series/Model:	Item:	Sheet:
LAYOUT					4 of 13

SERIES: 4000/6000 ALUMINUM FIXED WINDOWS
FIN/FLANGE FRAME WINDOW COMPARATIVE ANALYSIS & NOTES
1/4" TEMPERED GLASS

Part Number:
Drawing Number: LTU 4000/6000 COMPOSITE
Revision Level: B 2003

7/121

WINDOW COMPARATIVE ANALYSIS CHART FOR 1/4" TEMPERED - LOAD LIMITED TO 100 PSF							
FTL-3619- 1/4" TEMPERED GLASS FLANGE FRAME							
HEIGHT INCHES	WIDTH INCHES	DESIGN LOAD CAPACITY - (PFS) POSITIVE	DESIGN LOAD CAPACITY - (PFS) NEGATIVE	HEIGHT INCHES	WIDTH INCHES	DESIGN LOAD CAPACITY - (PFS) POSITIVE	DESIGN LOAD CAPACITY - (PFS) NEGATIVE
24	18	100.0	100.0	24	60	100.0	100.0
36	18	100.0	100.0	36	60	100.0	100.0
48	18	100.0	100.0	48	60	100.0	100.0
60	18	100.0	100.0	60	60	100.0	100.0
72	18	100.0	100.0	72	60	100.0	100.0
84	18	100.0	100.0	84	60	91.5	91.5
96	18	100.0	100.0	96	60	85.5	85.5
108	18	100.0	100.0	108	60	78.8	78.8
120	18	100.0	100.0	120	60	68.4	68.4
132	18	100.0	100.0	132	60		
144	18	100.0	100.0	144	60		
148	18	100.0	100.0	148	60		
156	18	100.0	100.0	156	60		
24	24	100.0	100.0	24	72	100.0	100.0
36	24	100.0	100.0	36	72	100.0	100.0
48	24	100.0	100.0	48	72	100.0	100.0
60	24	100.0	100.0	60	72	100.0	100.0
72	24	100.0	100.0	72	72	98.0	98.0
84	24	100.0	100.0	84	72	85.7	85.7
96	24	100.0	100.0	96	72	78.4	78.4
108	24	100.0	100.0	108	72		
120	24	100.0	100.0	120	72		
132	24	100.0	100.0	132	72		
144	24	100.0	100.0	144	72		
148	24	100.0	100.0	148	72		
156	24	100.0	100.0	156	72		
24	30	100.0	100.0	24	84	100.0	100.0
36	30	100.0	100.0	36	84	100.0	100.0
48	30	100.0	100.0	48	84	100.0	100.0
60	30	100.0	100.0	60	84	91.5	91.5
72	30	100.0	100.0	72	84	85.7	85.7
84	30	100.0	100.0	84	84	84.0	84.0
96	30	100.0	100.0	96	84		
108	30	100.0	100.0	108	84		
120	30	100.0	100.0	120	84		
132	30	100.0	100.0	132	84		
144	30	100.0	100.0	144	84		
148	30	100.0	100.0	148	84		
156	30	100.0	100.0	156	84		
24	36	100.0	100.0	19.125	26	100.0	100.0
36	36	100.0	100.0	26.5	26	100.0	100.0
48	36	100.0	100.0	37	26	100.0	100.0
60	36	100.0	100.0	53.125	26	100.0	100.0
72	36	100.0	100.0	19.125	38.375	100.0	100.0
84	36	100.0	100.0	26.5	38.375	100.0	100.0
96	36	100.0	100.0	37	38.375	100.0	100.0
108	36	100.0	100.0	53.125	38.375	100.0	100.0
120	36	100.0	100.0	19.125	50.625	100.0	100.0
132	36	100.0	100.0	26.5	50.625	100.0	100.0
144	36	100.0	100.0	37	50.625	100.0	100.0
148	36	100.0	100.0	53.125	50.625	100.0	100.0
156	36	100.0	100.0	19.125	58	100.0	100.0
24	48	100.0	100.0	26.5	58	100.0	100.0
36	48	100.0	100.0	37	58	100.0	100.0
48	48	100.0	100.0	53.125	58	100.0	100.0
60	48	100.0	100.0	19.125	63	100.0	100.0
72	48	100.0	100.0	26.5	63	100.0	100.0
84	48	100.0	100.0	37	63	100.0	100.0
96	48	94.8	94.8	53.125	63	100.0	100.0
108	48	81.2	81.2	19.125	74.25	100.0	100.0
120	48	73.3	73.3	26.5	74.25	100.0	100.0
132	48	66.8	66.8	37	74.25	100.0	100.0
144	48	62.2	62.2	53.125	74.25	100.0	100.0
148	48	61.4	61.4				
156	48						

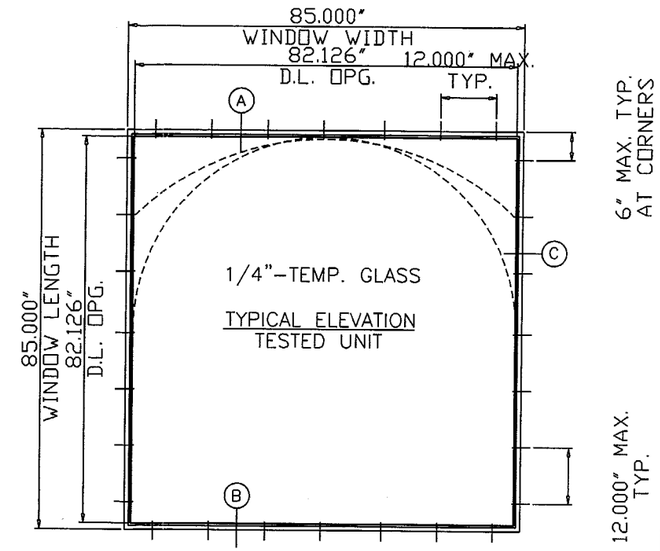

UNIT PERFORMANCE DATA

REPORT #FTL-3619

TEST SIZE = 85" wide X 85" hi (O)
DESIGN LOADS = +104.0, -104.0 PSF (PA-202)
STRUCTURAL TEST LOAD = +156.0, -156.0 PSF
WATER INFILTRATION TEST = 18.0 PSF
DAYLIGHT OPENING = 82 1/8" wide X 82 1/8" hi
TESTED GLASS = 1/4" TEMPERED GLASS

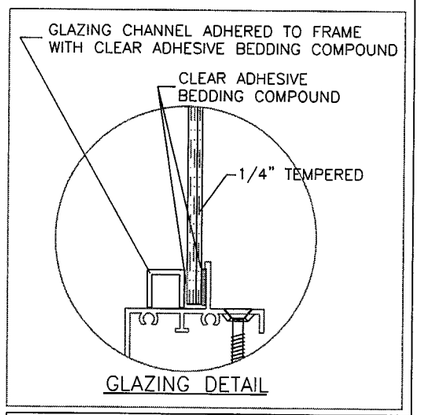

Approved as complying with the
Florida Buiding Code
Date 05/08/03
NOA# 03-0128.06
Miami Dade Product Control
Division
By

WINDOWS TO BE PROTECTED WITH DADE COUNTY APPROVED IMPACT RESISTANT SHUTTERS

FLANGE FRAME ANCHORS ARE TO BE SPACED NOT GREATER THAN 6" FROM EACH CORNER, AND NOT GREATER THAN 12" CENTER TO CENTER.

THOMAS J. SOTOS
PROFESSIONAL ENGINEER
FL LIC. # 55225

JAN 21 2003
DATE_____

Revision Notes:

Drawn By: Larry Magee
Date Drawn: 12/20/2002
Scale: AS NOTED

LAWSON INDUSTRIES, INC.
8501 NW 90th St.
MEDLEY, FLORIDA 33166
(305) 696-8660

MANUFACTURER OF QUALITY ALUMINUM WINDOWS AND GLASS DOORS

Draw Class:	Part Class:	Prod Category:	Series/Model:	Item:	Sheet:
LAYOUT					5 of 13

SERIES: 4000/6000 ALUMINUM FIXED WINDOWS
FLANGE FRAME WINDOW COMPARATIVE ANALYSIS & NOTES
1/4" TEMPERED GLASS - LOAD LIMITED TO 100PSF

Part Number:
Drawing Number: LTU 4000/6000 COMPOSITE
Revision Level: B 2003

7A
121

WINDOW COMPARATIVE ANALYSIS CHART FOR 1/4" ANNEALED					
		FIN FRAME		DESIGN LOAD CAPACITY - (PFS)	
HEIGHT INCHES	WIDTH INCHES	QTY OF ANCHORS	AVG. ANCHOR SPACING (IN)	POSITIVE	NEGATIVE
24	18	5	16	99.2	99.2
36	18	6	18	82.7	82.7
48	18	7	18	76.3	76.3
60	18	8	19	72.9	72.9
72	18	10	18	70.9	70.9
84	18	11	18	69.4	69.4
96	18	12	19	68.4	68.4
108	18	14	18	67.6	67.6
120	18	13	21	56.6	56.6
132	18	11	27	45.1	45.1
144	18	10	32	37.3	37.3
148	18	10	33	34.7	34.7
156	18	9	38	30.6	30.6
24	24	6	16	93.0	93.0
36	24	6	20	69.8	69.8
48	24	8	18	62.0	62.0
60	24	9	18	58.1	58.1
72	24	10	19	55.8	55.8
84	24	11	19	54.3	54.3
96	24	13	18	53.1	53.1
108	24	14	18	52.3	52.3
120	24	15	19	51.7	51.7
132	24	15	20	45.1	45.1
144	24	13	25	36.8	36.8
148	24	13	26	34.7	34.7
156	24				
24	30	6	18	77.5	77.5
36	30	7	18	63.8	63.8
48	30	8	19	54.1	54.1
60	30	9	20	49.6	49.6
72	30	11	18	47.0	47.0
84	30	12	19	45.3	45.3
96	30	13	19	44.1	44.1
108	30	14	19	43.2	43.2
120	30	16	18	42.3	42.3
132	30				
144	30				
148	30				
156	30				
24	36	6	20	69.8	69.8
36	36	8	18	62.0	62.0
48	36	9	18	49.6	49.6
60	36	10	19	44.3	44.3
72	36	11	19	40.3	40.3
84	36	11	21	35.4	35.4
96	36	11	24	31.9	31.9
108	36				
120	36				
132	36				
144	36				
148	36				
156	36				
24	48	8	18	62.0	62.0
36	48	9	18	49.6	49.6
48	48	11	17	46.5	46.5
60	48	12	18	38.8	38.8
72	48	12	20	34.4	34.4
84	48				
96	48				
108	48				
120	48				
132	48				
144	48				
148	48				
156	48				

WINDOW COMPARATIVE ANALYSIS CHART FOR 1/4" ANNEALED					
		FIN FRAME		DESIGN LOAD CAPACITY - (PFS)	
HEIGHT INCHES	WIDTH INCHES	QTY OF ANCHORS	AVG. ANCHOR SPACING (IN)	POSITIVE	NEGATIVE
24	60	9	18	58.1	58.1
36	60	10	19	44.3	44.3
48	60	12	18	38.8	38.8
60	60	14	17	36.9	36.9
72	60				
84	60				
96	60				
108	60				
120	60				
132	60				
144	60				
148	60				
156	60				
24	72	10	19	55.8	55.8
36	72	11	19	40.3	40.3
48	72	12	20	34.4	34.4
60	72				
72	72				
84	72				
96	72				
108	72				
120	72				
132	72				
144	72				
148	72				
156	72				
24	84	11	19	54.3	54.3
36	84	11	21	35.4	35.4
48	84				
60	84				
72	84				
84	84				
96	84				
108	84				
120	84				
132	84				
144	84				
148	84				
156	84				
19.125	26	5	18	92.3	92.3
26.5	26	6	17	84.3	84.3
37	26	7	18	66.2	66.2
53.125	26	8	19	56.8	56.8
19.125	38.375	6	19	77.7	77.7
26.5	38.375	7	18	64.3	64.3
37	38.375	9	16	58.2	58.2
53.125	38.375	10	18	45.5	45.5
19.125	50.625	7	19	71.9	71.9
26.5	50.625	8	19	57.0	57.0
37	50.625	9	19	47.5	47.5
53.125	50.625	12	17	42.1	42.1
19.125	58	8	19	69.9	69.9
26.5	58	9	18	54.6	54.6
37	58	10	19	44.3	44.3
53.125	58	12	18	38.8	38.8
19.125	63	9	18	68.8	68.8
26.5	63	9	19	53.3	53.3
37	63	10	20	42.7	42.7
53.125	63	13	17	36.3	36.3
19.125	74.25	10	18	67.0	67.0
26.5	74.25	11	18	51.3	51.3
37	74.25	11	20	38.1	38.1
53.125	74.25				

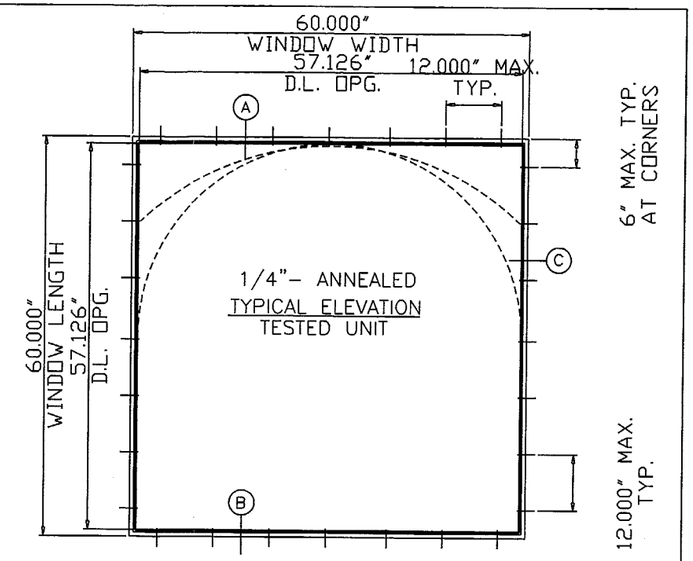

UNIT PERFORMANCE DATA

REPORT #FTL-3620

TEST SIZE = 60" wide X 60" hi (O)
DESIGN LOADS = +47.40, -47.40 PSF (PA-202)
STRUCTURAL TEST LOAD = +71.10, -71.10 PSF
WATER INFILTRATION TEST = 18.0 PSF @ #FTL-3619
DAYLIGHT OPENING = 57 1/8" wide X 57 1/8" hi
TESTED GLASS = 1/4" ANNEALED GLASS

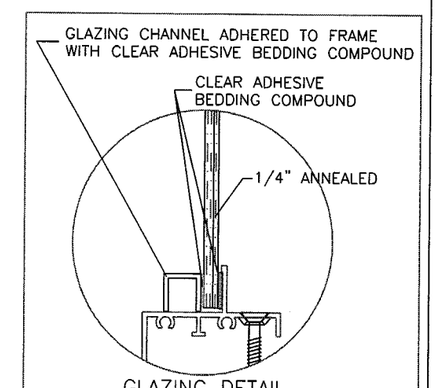

GLAZING DETAIL

Approved as complying with the
Florida Building Code
Date 05/08/03
NOA# 03-0128.06
Miami Dade Product Control
Division
By Clarence Bowman

WINDOWS TO BE PROTECTED WITH
DADE COUNTY APPROVED
IMPACT RESISTANT SHUTTERS

FLANGE FRAME ANCHORS ARE TO BE SPACED NOT GREATER THAN 6" FROM EACH CORNER, AND NOT GREATER THAN 22" CENTER TO CENTER. FIN FRAME ANCHORS SPACED AS TABULATED ABOVE.

THOMAS J. SOTOS
PROFESSIONAL ENGINEER
FL LIC. # 55225

JAN 21 2003
DATE_____

Revision Notes:

Drawn By: Larry Magee
Date Drawn: 12/20/2002
Scale: AS NOTED

LAWSON INDUSTRIES, INC.
8501 NW 90th St.
MEDLEY, FLORIDA 33166
(305) 696-8660

MANUFACTURER OF QUALITY ALUMINUM WINDOWS AND GLASS DOORS

Draw Class:	Part Class:	Prod Category:	Series/Model:	Item:	Sheet:
LAYOUT					6 of 13

SERIES: 4000/6000 ALUMINUM FIXED WINDOWS
FIN/FLANGE FRAME WINDOW COMPARATIVE ANALYSIS & NOTES
1/4" ANNEALED GLASS

Part Number:
Drawing Number: LTU 4000/6000 COMPOSITE
Revision Level: B 2003

WINDOW COMPARATIVE ANALYSIS CHART FOR 1/8" TEMP. INSULATED					
		FIN FRAME		DESIGN LOAD CAPACITY - (PFS)	
HEIGHT INCHES	WIDTH INCHES	QTY OF ANCHORS	AVG. ANCHOR SPACING (IN)	POSITIVE	NEGATIVE
24	18	9	9	120.0	210.0
36	18	14	7	120.0	210.0
48	18	18	7	120.0	210.0
60	18	23	6	120.0	210.0
72	18	27	6	120.0	210.0
84	18	32	6	120.0	210.0
96	18	33	6	120.0	189.0
108	18	28	9	120.0	145.0
120	18	25	11	113.0	113.0
132	18	22	13	92.4	92.4
144	18	20	16	74.8	74.8
148	18	19	17	71.4	71.4
156	18				
24	24	12	8	120.0	210.0
36	24	18	6	120.0	210.0
48	24	22	6	120.0	188.3
60	24	26	6	120.0	176.6
72	24	30	6	120.0	169.5
84	24	32	6	120.0	157.0
96	24	35	6	120.0	149.0
108	24	38	6	120.0	145.0
120	24	33	8	113.0	113.0
132	24	30	10	92.4	92.4
144	24	26	12	73.9	73.9
148	24	26	13	71.4	71.4
156	24				
24	30	15	7	120.0	210.0
36	30	21	6	120.0	193.7
48	30	24	6	120.0	164.4
60	30	27	6	120.0	150.7
72	30	30	6	120.0	138.0
84	30	28	8	112.0	112.0
96	30	30	8	102.0	102.0
108	30	31	8	94.1	94.1
120	30	36	9	88.8	88.8
132	30				
144	30				
148	30				
156	30				
24	36	18	6	120.0	210.0
36	36	25	5	120.0	188.3
48	36	26	6	120.0	150.7
60	36	29	6	120.0	134.5
72	36	33	6	120.0	125.6
84	36	33	7	110.0	110.0
96	36	32	8	93.2	93.2
108	36				
120	36				
132	36				
144	36				
148	36				
156	36				
24	48	22	6	120.0	188.3
36	48	26	6	120.0	150.7
48	48	33	5	120.0	141.3
60	48	34	6	117.7	117.7
72	48	37	6	105.9	105.9
84	48				
96	48				
108	48				
120	48				
132	48				
144	48				
148	48				
156	48				

WINDOW COMPARATIVE ANALYSIS CHART FOR 1/8" TEMP. INSULATED					
		FIN FRAME		DESIGN LOAD CAPACITY - (PFS)	
HEIGHT INCHES	WIDTH INCHES	QTY OF ANCHORS	AVG. ANCHOR SPACING (IN)	POSITIVE	NEGATIVE
24	60	26	6	120.0	176.6
36	60	29	6	120.0	134.5
48	60	34	6	117.7	117.7
60	60	41	5	113.0	113.0
72	60				
84	60				
96	60				
108	60				
120	60				
132	60				
144	60				
148	60				
156	60				
24	72	30	6	120.0	169.5
36	72	33	6	120.0	125.6
48	72	37	6	105.9	105.9
60	72				
72	72				
84	72				
96	72				
108	72				
120	72				
132	72				
144	72				
148	72				
156	72				
24	84	32	6	120.0	157.0
36	84	33	7	110.0	110.0
48	84				
60	84				
72	84				
84	84				
96	84				
108	84				
120	84				
132	84				
144	84				
148	84				
156	84				
19.125	26	11	8	120.0	210.0
26.5	26	15	7	120.0	210.0
37	26	20	6	120.0	201.0
53.125	26	24	6	120.0	172.6
19.125	38.375	16	7	120.0	210.0
26.5	38.375	20	6	120.0	195.4
37	38.375	25	6	120.0	176.9
53.125	38.375	28	6	120.0	138.3
19.125	50.625	21	6	120.0	210.0
26.5	50.625	24	6	120.0	173.3
37	50.625	27	6	120.0	144.4
53.125	50.625	35	5	120.0	127.9
19.125	58	24	6	120.0	210.0
26.5	58	26	6	120.0	165.8
37	58	29	6	120.0	134.5
53.125	58	36	6	117.7	117.7
19.125	63	25	6	120.0	209.0
26.5	63	27	6	120.0	162.0
37	63	30	6	120.0	129.7
53.125	63	37	6	110.3	110.3
19.125	74.25	29	6	120.0	203.5
26.5	74.25	29	6	120.0	144.0
37	74.25	34	6	120.0	122.0
53.125	74.25				

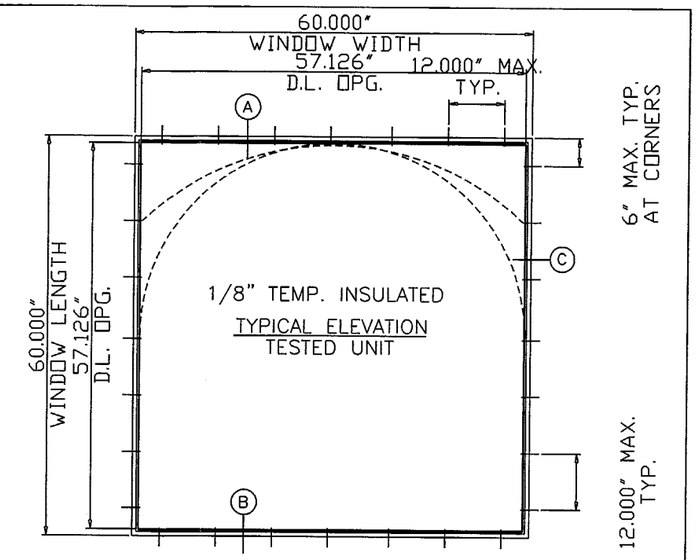

UNIT PERFORMANCE DATA

REPORT #FTL-3621

TEST SIZE = 60" wide X 60" hi (O)
DESIGN LOADS = +144.00, -144.00 PSF (PA-202)
STRUCTURAL TEST LOAD = +216.00, -216.00 PSF
WATER INFILTRATION TEST = 18.0 PSF @ #FTL-3619
DAYLIGHT OPENING = 57 1/8" wide X 57 1/8" hi
TESTED GLASS = 1/8" TEMPERED GLASS
DOUBLE GLAZED INSULATED

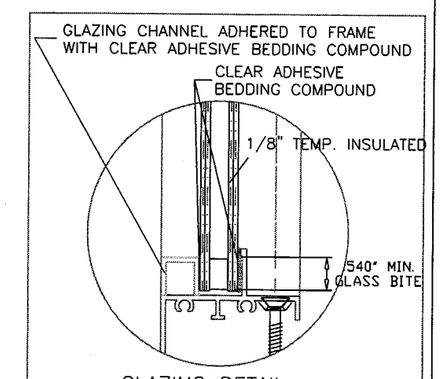

GLAZING DETAIL

Approved as complying with the
Florida Buiding Code
Date 05/06/03
NOA# 03-0128.06
Miami Dade Product Control
Division
By Theodore Lorman

WINDOWS TO BE PROTECTED WITH DADE COUNTY APPROVED IMPACT RESISTANT SHUTTERS

FLANGE FRAME ANCHORS ARE TO BE SPACED NOT GREATER THAN 6" FROM EACH CORNER, AND NOT GREATER THAN 12" CENTER TO CENTER. FIN FRAME ANCHORS SPACED AS TABULATED ABOVE.

THOMAS J. SOTOS
PROFESSIONAL ENGINEER
FL LIC. # 55225

JAN 21 2003
DATE_____

Revision Notes:

Drawn By: Larry Magee
Date Drawn: 12/20/2002
Scale: AS NOTED

LAWSON INDUSTRIES, INC.
8501 NW 90th St.
MEDLEY, FLORIDA 33166
(305) 696-8660

MANUFACTURER OF QUALITY ALUMINUM WINDOWS AND GLASS DOORS

Draw Class:	Part Class:	Prod Category:	Series/Model:	Item:	Sheet:
LAYOUT					7 of 13

SERIES: 4000/6000 ALUMINUM FIXED WINDOWS
FIN/FLANGE FRAME WINDOW COMPARATIVE ANALYSIS & NOTES
1/8" TEMPERED INSULATED GLASS

Part Number:
Drawing Number: LTU 4000/6000 COMPOSITE
Revision Level: B 2003

WINDOW COMPARATIVE ANALYSIS CHART FOR 3/16" ANN. INSULATED					
		FIN FRAME		DESIGN LOAD CAPACITY - (PFS)	
HEIGHT INCHES	WIDTH INCHES	QTY OF ANCHORS	AVG. ANCHOR SPACING (IN)	POSITIVE	NEGATIVE
24	18	7	12	120.0	142.7
36	18	8	13	118.9	118.9
48	18	10	13	109.7	109.7
60	18	12	13	104.9	104.9
72	18	14	12	101.9	101.9
84	18	15	13	99.9	99.9
96	18	17	13	98.4	98.4
108	18	18	14	88.2	88.2
120	18	15	18	69.3	69.3
132	18	13	23	54.6	54.6
144	18	12	27	45.4	45.4
148	18	12	27	42.1	42.1
156	18				
24	24	8	12	120.0	133.8
36	24	9	13	100.3	100.3
48	24	11	13	89.2	89.2
60	24	12	14	83.6	83.6
72	24	14	13	80.3	80.3
84	24	16	13	78.0	78.0
96	24	18	13	76.4	76.4
108	24	20	13	75.2	75.2
120	24	20	14	69.3	69.3
132	24	18	17	54.6	54.6
144	24	16	21	44.5	44.5
148	24	15	22	42.1	42.1
156	24				
24	30	8	13	111.5	111.5
36	30	10	13	91.7	91.7
48	30	12	13	77.8	77.8
60	30	13	13	71.3	71.3
72	30	15	13	66.4	66.4
84	30	15	15	59.8	59.8
96	30	16	15	55.7	55.7
108	30	18	15	53.4	53.4
120	30	19	15	51.7	51.7
132	30				
144	30				
148	30				
156	30				
24	36	9	13	100.3	100.3
36	36	12	12	89.2	89.2
48	36	13	12	71.3	71.3
60	36	14	13	63.7	63.7
72	36	14	15	54.3	54.3
84	36	14	17	45.6	45.6
96	36	14	18	40.7	40.7
108	36				
120	36				
132	36				
144	36				
148	36				
156	36				
24	48	11	13	89.2	89.2
36	48	13	12	71.3	71.3
48	48	16	12	66.9	66.9
60	48	16	13	55.7	55.7
72	48	18	13	50.2	50.2
84	48				
96	48				
108	48				
120	48				
132	48				
144	48				
148	48				
156	48				

WINDOW COMPARATIVE ANALYSIS CHART FOR 3/16" ANN. INSULATED					
		FIN FRAME		DESIGN LOAD CAPACITY - (PFS)	
HEIGHT INCHES	WIDTH INCHES	QTY OF ANCHORS	AVG. ANCHOR SPACING (IN)	POSITIVE	NEGATIVE
24	60	12	14	83.6	83.6
36	60	14	13	63.7	63.7
48	60	16	13	55.7	55.7
60	60	19	12	53.1	53.1
72	60				
84	60				
96	60				
108	60				
120	60				
132	60				
144	60				
148	60				
156	60				
24	72	14	13	80.3	80.3
36	72	14	15	54.3	54.3
48	72	18	13	50.2	50.2
60	72				
72	72				
84	72				
96	72				
108	72				
120	72				
132	72				
144	72				
148	72				
156	72				
24	84	16	13	78.0	78.0
36	84	14	17	45.6	45.6
48	84				
60	84				
72	84				
84	84				
96	84				
108	84				
120	84				
132	84				
144	84				
148	84				
156	84				
19.125	26	7	12	120.0	132.7
26.5	26	9	11	120.0	121.2
37	26	10	12	95.2	95.2
53.125	26	12	13	81.7	81.7
19.125	38.375	9	12	111.8	111.8
26.5	38.375	10	12	92.5	92.5
37	38.375	12	12	83.8	83.8
53.125	38.375	14	13	65.5	65.5
19.125	50.625	10	13	103.5	103.5
26.5	50.625	11	14	82.0	82.0
37	50.625	13	13	68.4	68.4
53.125	50.625	17	12	60.6	60.6
19.125	58	12	12	100.5	100.5
26.5	58	12	14	78.5	78.5
37	58	14	13	63.7	63.7
53.125	58	18	12	55.7	55.7
19.125	63	12	13	98.9	98.9
26.5	63	13	13	76.7	76.7
37	63	15	13	61.4	61.4
53.125	63	18	12	52.2	52.2
19.125	74.25	14	13	96.3	96.3
26.5	74.25	15	13	73.7	73.7
37	74.25	15	14	51.6	51.6
53.125	74.25				

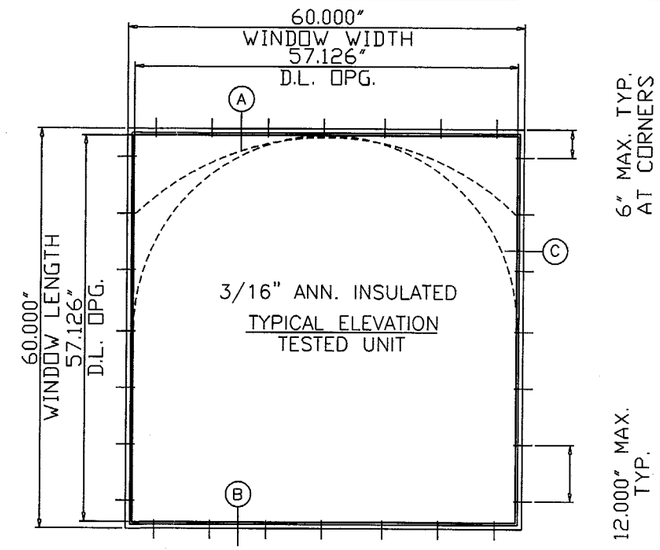

UNIT PERFORMANCE DATA

REPORT #FTL-3622

TEST SIZE = 60" wide X 60" hi (O)
DESIGN LOADS = +67.90, -67.90 PSF (PA-202)
STRUCTURAL TEST LOAD = +101.9, -101.9 PSF
WATER INFILTRATION TEST = 18.0 PSF @ #FTL-3619
DAYLIGHT OPENING = 57 1/8" wide X 57 1/8" hi
TESTED GLASS = 3/16" ANNEALED GLASS
DOUBLE GLAZED INSULATED

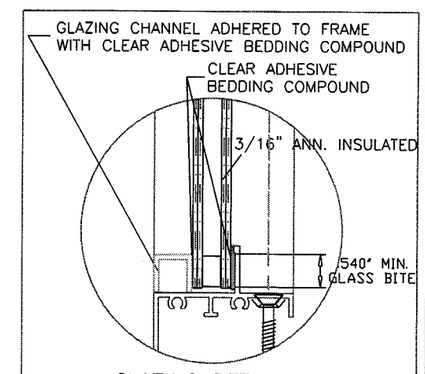

GLAZING DETAIL

Approved as complying with the
Florida Building Code
Date 05/08/03
NOA# 03-0128.06
Miami Dade Product Control
Division
By Theodore Bernay

WINDOWS TO BE PROTECTED WITH DADE COUNTY APPROVED IMPACT RESISTANT SHUTTERS

FLANGE FRAME ANCHORS ARE TO BE SPACED NOT GREATER THAN 6" FROM EACH CORNER, AND NOT GREATER THAN 22" CENTER TO CENTER. FIN FRAME ANCHORS SPACED AS TABULATED ABOVE.

THOMAS J. SOTOS
PROFESSIONAL ENGINEER
FL LIC. # 55225

DATE JAN 21 2003

Revision Notes:

Drawn By: Larry Magee
Date Drawn: 12/20/2002
Scale: AS NOTED

LAWSON INDUSTRIES, INC.
8501 NW 90th St.
MEDLEY, FLORIDA 33166
(305) 696-8660

MANUFACTURER OF QUALITY ALUMINUM WINDOWS AND GLASS DOORS

Draw Class:	Part Class:	Prod Category:	Series/Model:	Item:	Sheet:
LAYOUT					8 of 13

SERIES: 4000/6000 ALUMINUM FIXED WINDOWS
FIN/FLANGE FRAME WINDOW COMPARATIVE ANALYSIS & NOTES
3/16" ANNEALED INSULATED GLASS

Part Number:
Drawing Number: LTU 4000/6000 COMPOSITE
Revision Level: B 2003

WINDOW COMPARATIVE ANALYSIS CHART FOR 3/16" ANNEALED					
		FIN FRAME		DESIGN LOAD CAPACITY - (PFS)	
HEIGHT INCHES	WIDTH INCHES	QTY OF ANCHORS	AVG. ANCHOR SPACING (IN)	POSITIVE	NEGATIVE
24	18	4	21	89.6	89.6
36	18	5	21	74.7	74.7
48	18	6	22	68.9	68.9
60	18	8	19	65.9	65.9
72	18	9	20	64.0	64.0
84	18	10	20	62.7	62.7
96	18	11	20	61.8	61.8
108	18	10	25	49.0	49.0
120	18	9	30	38.5	38.5
132	18				
144	18				
148	18				
156	18				
24	24	5	19	84.0	84.0
36	24	6	20	63.0	63.0
48	24	7	20	56.0	56.0
60	24	8	21	52.5	52.5
72	24	9	21	50.4	50.4
84	24	10	21	49.0	49.0
96	24	11	21	48.0	48.0
108	24				
120	24				
132	24				
144	24				
148	24				
156	24				
24	30	5	21	70.0	70.0
36	30	7	18	57.6	57.6
48	30	7	22	48.9	48.9
60	30	8	22	42.5	42.5
72	30	8	25	36.9	36.9
84	30				
96	30				
108	30				
120	30				
132	30				
144	30				
148	30				
156	30				
24	36	6	20	63.0	63.0
36	36	8	18	56.0	56.0
48	36	8	21	44.8	44.8
60	36	9	21	38.4	38.4
72	36				
84	36				
96	36				
108	36				
120	36				
132	36				
144	36				
148	36				
156	36				
24	48	7	20	56.0	56.0
36	48	8	21	44.8	44.8
48	48	10	19	41.9	41.9
60	48				
72	48				
84	48				
96	48				
108	48				
120	48				
132	48				
144	48				
148	48				
156	48				

WINDOW COMPARATIVE ANALYSIS CHART FOR 3/16" ANNEALED					
		FIN FRAME		DESIGN LOAD CAPACITY - (PFS)	
HEIGHT INCHES	WIDTH INCHES	QTY OF ANCHORS	AVG. ANCHOR SPACING (IN)	POSITIVE	NEGATIVE
24	60	8	21	52.5	52.5
36	60	9	21	38.4	38.4
48	60				
60	60				
72	60				
84	60				
96	60				
108	60				
120	60				
132	60				
144	60				
148	60				
156	60				
24	72	9	21	50.4	50.4
36	72				
48	72				
60	72				
72	72				
84	72				
96	72				
108	72				
120	72				
132	72				
144	72				
148	72				
156	72				
24	84	10	21	49.0	49.0
36	84				
48	84				
60	84				
72	84				
84	84				
96	84				
108	84				
120	84				
132	84				
144	84				
148	84				
156	84				
19.125	26	5	18	83.4	83.4
26.5	26	6	17	76.1	76.1
37	26	6	21	59.8	59.8
53.125	26	8	19	51.3	51.3
19.125	38.375	6	19	70.2	70.2
26.5	38.375	6	21	58.1	58.1
37	38.375	8	18	52.6	52.6
53.125	38.375	9	20	41.1	41.1
19.125	50.625	7	19	65.0	65.0
26.5	50.625	7	22	51.5	51.5
37	50.625	8	21	42.9	42.9
53.125	50.625				
19.125	58	7	22	63.1	63.1
26.5	58	8	21	49.3	49.3
37	58	9	21	39.5	39.5
53.125					
19.125	63	8	20	62.1	62.1
26.5	63	8	22	48.2	48.2
37	63				
53.125	63				
19.125	74.25	9	20	60.5	60.5
26.5	74.25	9	22	44.8	44.8
37	74.25				
53.125	74.25				

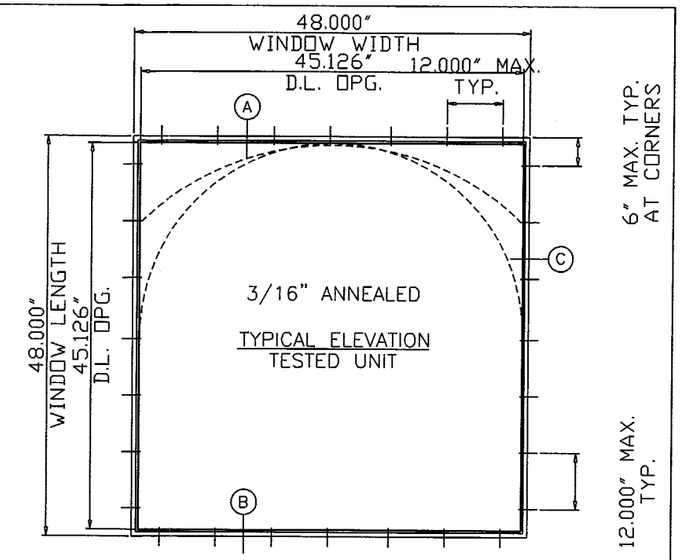

UNIT PERFORMANCE DATA

REPORT #FTL-3623

TEST SIZE = 48" wide X 48" hi (O)
DESIGN LOADS = +53.50, -53.50 PSF (PA-202)
STRUCTURAL TEST LOAD = +80.3, -80.3 PSF
WATER INFILTRATION TEST = 18.0 PSF @ #FTL-3619
DAYLIGHT OPENING = 45 1/8" wide X 45 1/8" hi
TESTED GLASS = 3/16" ANNEALED GLASS

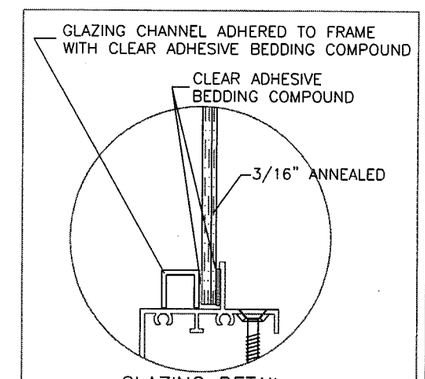

GLAZING DETAIL

Approved as complying with the Florida Buiding Code
Date 05/08/03
NOA# 03-0128.06
Miami Dade Product Control Division
By Glenda Bowman

WINDOWS TO BE PROTECTED WITH DADE COUNTY APPROVED IMPACT RESISTANT SHUTTERS

FLANGE FRAME ANCHORS ARE TO BE SPACED NOT GREATER THAN 6" FROM EACH CORNER, AND NOT GREATER THAN 22" CENTER TO CENTER. FIN FRAME ANCHORS SPACED AS TABULATED ABOVE.

THOMAS J. SOTOS
PROFESSIONAL ENGINEER
FL LIC. # 55225

DATE JAN 21 2003

Revision Notes:

Drawn By: Larry Magee
Date Drawn: 12/20/2002
Scale: AS NOTED

LAWSON INDUSTRIES, INC.
8501 NW 90th St.
MEDLEY, FLORIDA 33166
(305) 696-8660
MANUFACTURER OF QUALITY ALUMINUM WINDOWS AND GLASS DOORS

Draw Class:	Part Class:	Prod Category:	Series/Model:	Item:	Sheet:
LAYOUT					9 of 13

SERIES: 4000/6000 ALUMINUM FIXED WINDOWS
FIN/FLANGE FRAME WINDOW COMPARATIVE ANALYSIS & NOTES
3/16" ANNEALED GLASS

Part Number:
Drawing Number: LTU 4000/6000 COMPOSITE
Revision Level: B 2003

11/121

WINDOW COMPARATIVE ANALYSIS CHART FOR 1/8" ANN. INSULATED					
		FIN FRAME		DESIGN LOAD CAPACITY - (PFS)	
HEIGHT INCHES	WIDTH INCHES	QTY OF ANCHORS	AVG. ANCHOR SPACING (IN)	POSITIVE	NEGATIVE
24	18	5	16	93.4	93.4
36	18	6	18	77.9	77.9
48	18	7	18	71.9	71.9
60	18	8	19	68.7	68.7
72	18	9	20	66.7	66.7
84	18	10	20	63.9	63.9
96	18	9	25	47.2	47.2
108	18	7	36	36.2	36.2
120	18	7	39	28.1	28.1
132	18				
144	18				
148	18				
156	18				
24	24	6	16	87.6	87.6
36	24	6	20	65.7	65.7
48	24	7	20	58.4	58.4
60	24	7	24	48.9	48.9
72	24	8	24	42.7	42.7
84	24	8	27	39.3	39.3
96	24	9	26	37.2	37.2
108	24				
120	24				
132	24				
144	24				
148	24				
156	24				
24	30	6	18	73.0	73.0
36	30	7	18	60.1	60.1
48	30	8	19	51.0	51.0
60	30	8	22	44.8	44.8
72	30	8	25	34.6	34.6
84	30				
96	30				
108	30				
120	30				
132	30				
144	30				
148	30				
156	30				
24	36	6	20	65.7	65.7
36	36	8	18	58.4	58.4
48	36	9	18	46.7	46.7
60	36	9	21	41.7	41.7
72	36				
84	36				
96	36				
108	36				
120	36				
132	36				
144	36				
148	36				
156	36				
24	48	7	20	58.4	58.4
36	48	9	18	46.7	46.7
48	48	11	17	43.8	43.8
60	48				
72	48				
84	48				
96	48				
108	48				
120	48				
132	48				
144	48				
148	48				
156	48				

WINDOW COMPARATIVE ANALYSIS CHART FOR 1/8" ANN. INSULATED					
		FIN FRAME		DESIGN LOAD CAPACITY - (PFS)	
HEIGHT INCHES	WIDTH INCHES	QTY OF ANCHORS	AVG. ANCHOR SPACING (IN)	POSITIVE	NEGATIVE
24	60	7	24	48.9	48.9
36	60	9	21	41.7	41.7
48	60				
60	60				
72	60				
84	60				
96	60				
108	60				
120	60				
132	60				
144	60				
148	60				
156	60				
24	72	8	24	42.7	42.7
36	72				
48	72				
60	72				
72	72				
84	72				
96	72				
108	72				
120	72				
132	72				
144	72				
148	72				
156	72				
24	84	8	27	39.3	39.3
36	84				
48	84				
60	84				
72	84				
84	84				
96	84				
108	84				
120	84				
132	84				
144	84				
148	84				
156	84				
19.125	26	5	18	86.9	86.9
26.5	26	6	17	79.4	79.4
37	26	6	21	62.3	62.3
53.125	26	8	19	53.5	53.5
19.125	38.375	6	19	73.2	73.2
26.5	38.375	7	18	60.6	60.6
37	38.375	8	18	54.9	54.9
53.125	38.375	9	20	42.9	42.9
19.125	50.625	7	19	67.8	67.8
26.5	50.625	8	19	53.7	53.7
37	50.625	9	19	44.8	44.8
53.125	50.625				
19.125	58	8	19	65.8	65.8
26.5	58	8	21	47.0	47.0
37	58	9	21	41.7	41.7
53.125	58				
19.125	63	7	23	56.6	56.6
26.5	63	8	22	42.7	42.7
37	63				
53.125	63				
19.125	74.25	9	20	63.1	63.1
26.5	74.25	8	25	36.0	36.0
37	74.25				
53.125	74.25				

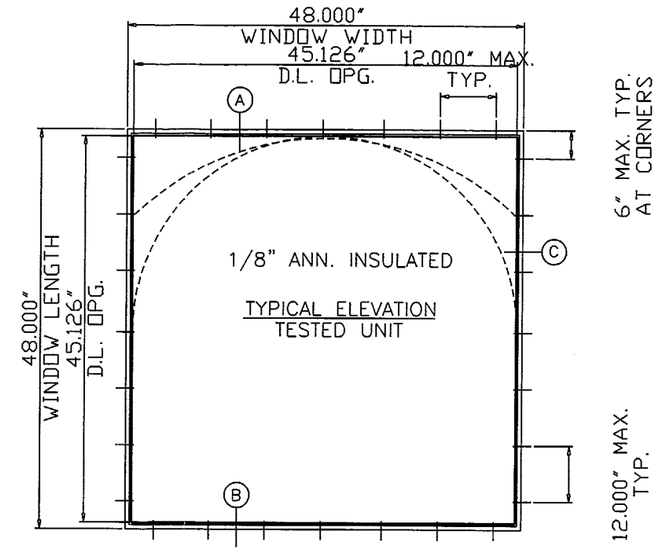

UNIT PERFORMANCE DATA

REPORT #FTL-3625

TEST SIZE = 48" wide X 48" hi (O)
DESIGN LOADS = +54.00, -54.00 PSF (PA-202)
STRUCTURAL TEST LOAD = +81.00, -81.00 PSF
WATER INFILTRATION TEST = 18.0 PSF @ #FTL-3619
DAYLIGHT OPENING = 45 1/8" wide X 45 1/8" hi
TESTED GLASS = 1/8" ANNEALED GLASS
DOUBLE GLAZED INSULATED

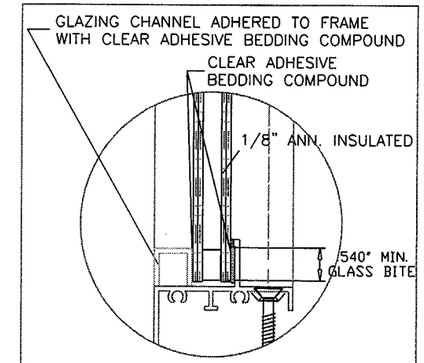

GLAZING DETAIL

Approved as complying with the Florida Building Code
Date 05/08/03
NOA# 03-0128.06
Miami Dade Product Control Division
By Geraldine Bowman

WINDOWS TO BE PROTECTED WITH DADE COUNTY APPROVED IMPACT RESISTANT SHUTTERS

FLANGE FRAME ANCHORS ARE TO BE SPACED NOT GREATER THAN 6" FROM EACH CORNER, AND NOT GREATER THAN 22" CENTER TO CENTER. FIN FRAME ANCHORS SPACED AS TABULATED ABOVE.

THOMAS J. SOTOS
PROFESSIONAL ENGINEER
FL LIC. # 55225

JAN 21 2003
DATE_____

Revision Notes:

Drawn By: Larry Magee
Date Drawn: 12/20/2002
Scale: AS NOTED

LAWSON INDUSTRIES, INC.
8501 NW 90th St.
MEDLEY, FLORIDA 33166
(305) 696-8660

MANUFACTURER OF QUALITY ALUMINUM WINDOWS AND GLASS DOORS

Draw Class:	Part Class:	Prod Category:	Series/Model:	Item:	Sheet:
LAYOUT					10 of 13

SERIES: 4000/6000 ALUMINUM FIXED WINDOWS
FIN/FLANGE FRAME WINDOW COMPARATIVE ANALYSIS & NOTES
1/8" ANNEALED INSULATED GLASS

Part Number:
Drawing Number: LTU 4000/6000 COMPOSITE
Revision Level: B 2003

12/121

WINDOW COMPARATIVE ANALYSIS CHART FOR 1/8" ANNEALED MONO					
		FIN FRAME		DESIGN LOAD CAPACITY - (PFS)	
HEIGHT INCHES	WIDTH INCHES	QTY OF ANCHORS	AVG. ANCHOR SPACING (IN)	POSITIVE	NEGATIVE
24	18	3	28	53.8	53.8
36	18	3	36	44.8	44.8
48	18	4	33	41.4	41.4
60	18	5	31	39.5	39.5
72	18	5	36	38.4	38.4
84	18	6	34	35.5	35.5
96	18	5	45	26.2	26.2
108	18	4	63	20.1	20.1
120	18	4	69	15.6	15.6
132	18				
144	18				
148	18				
156	18				
24	24	3	32	50.4	50.4
36	24	4	30	37.8	37.8
48	24	4	36	33.6	33.6
60	24	4	42	27.2	27.2
72	24	5	38	23.7	23.7
84	24	5	43	21.8	21.8
96	24	5	48	20.7	20.7
108	24				
120	24				
132	24				
144	24				
148	24				
156	24				
24	30	3	36	42.0	42.0
36	30	4	33	34.6	34.6
48	30	5	31	29.3	29.3
60	30	5	36	24.9	24.9
72	30	5	40	19.2	19.2
84	30				
96	30				
108	30				
120	30				
132	30				
144	30				
148	30				
156	30				
24	36	4	30	37.8	37.8
36	36	5	28	33.6	33.6
48	36	5	33	26.9	26.9
60	36	6	32	24.0	24.0
72	36				
84	36				
96	36				
108	36				
120	36				
132	36				
144	36				
148	36				
156	36				
24	48	4	36	33.6	33.6
36	48	5	33	26.9	26.9
48	48	6	32	24.6	24.6
60	48				
72	48				
84	48				
96	48				
108	48				
120	48				
132	48				
144	48				
148	48				
156	48				

WINDOW COMPARATIVE ANALYSIS CHART FOR 1/8" ANNEALED MONO					
		FIN FRAME		DESIGN LOAD CAPACITY - (PFS)	
HEIGHT INCHES	WIDTH INCHES	QTY OF ANCHORS	AVG. ANCHOR SPACING (IN)	POSITIVE	NEGATIVE
24	60	4	42	27.2	27.2
36	60	6	32	24.0	24.0
48	60				
60	60				
72	60				
84	60				
96	60				
108	60				
120	60				
132	60				
144	60				
148	60				
156	60				
24	72	5	38	23.7	23.7
36	72				
48	72				
60	72				
72	72				
84	72				
96	72				
108	72				
120	72				
132	72				
144	72				
148	72				
156	72				
24	84	5	43	21.8	21.8
36	84				
48	84				
60	84				
72	84				
84	84				
96	84				
108	84				
120	84				
132	84				
144	84				
148	84				
156	84				
19.125	26	3	30	50.0	50.0
26.5	26	4	26	45.7	45.7
37	26	4	31	35.9	35.9
53.125	26	5	31	29.8	29.8
19.125	38.375	4	28	42.1	42.1
26.5	38.375	4	32	34.9	34.9
37	38.375	5	30	31.6	31.6
53.125	38.375	5	36	24.7	24.7
19.125	50.625	4	34	39.0	39.0
26.5	50.625	5	30	30.9	30.9
37	50.625	5	35	25.8	25.8
53.125	50.625				
19.125	58	5	30	37.9	37.9
26.5	58	4	42	26.1	26.1
37	58	6	31	24.0	24.0
53.125	58				
19.125	63	4	41	31.4	31.4
26.5	63	4	44	23.7	23.7
37	63				
53.125	63				
19.125	74.25	6	31	36.3	36.3
26.5	74.25	4	50	20.0	20.0
37	74.25				
53.125	74.25				

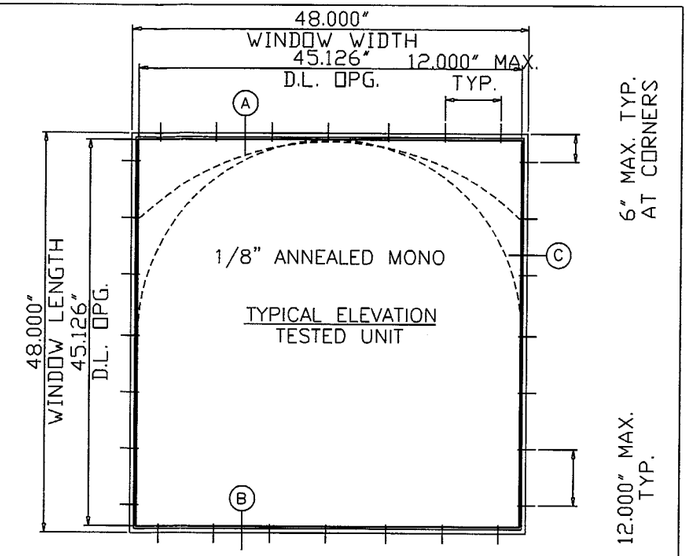

UNIT PERFORMANCE DATA

REPORT #FTL-3624

TEST SIZE = 48" wide X 48" hi (O)
DESIGN LOADS = +30.00, -30.00 PSF (PA-202)
STRUCTURAL TEST LOAD = +45.00, -45.00 PSF
WATER INFILTRATION TEST = 18.0 PSF @ #FTL-3619
DAYLIGHT OPENING = 45 1/8" wide X 45 1/8" hi
TESTED GLASS = 1/8" ANNEALED GLASS

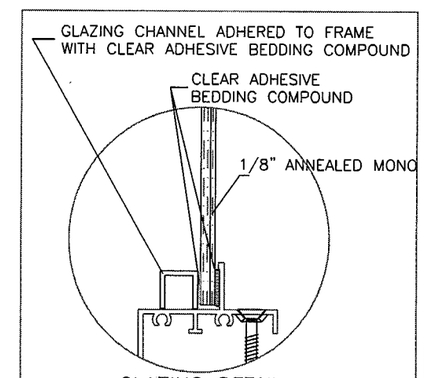

GLAZING DETAIL

Approved as complying with the
Florida Building Code
Date 05/08/03
NOA# 03-0128.06
Miami Dade Product Control
Division
By Clarence Gorman

WINDOWS TO BE PROTECTED WITH DADE COUNTY APPROVED IMPACT RESISTANT SHUTTERS

FLANGE FRAME ANCHORS ARE TO BE SPACED NOT GREATER THAN 6" FROM EACH CORNER, AND NOT GREATER THAN 22" CENTER TO CENTER. FIN FRAME ANCHORS SPACED AS TABULATED ABOVE.

THOMAS J. SOTOS
PROFESSIONAL ENGINEER
FL LIC. # 55225

DATE JAN 21 2003

Revision Notes:

Drawn By: Larry Magee
Date Drawn: 12/20/2002
Scale: AS NOTED

LAWSON INDUSTRIES, INC.
8501 NW 90th St.
MEDLEY, FLORIDA 33166
(305) 696-8660

MANUFACTURER OF QUALITY ALUMINUM WINDOWS AND GLASS DOORS

Draw Class:	Part Class:	Prod Category:	Series/Model:	Item:	Sheet:
LAYOUT					11 of 13

SERIES: 4000/6000 ALUMINUM FIXED WINDOWS
FIN/FLANGE FRAME WINDOW COMPARATIVE ANALYSIS & NOTES
1/8" ANNEALED GLASS

Part Number:
Drawing Number: LTU 4000/6000 COMPOSITE
Revision Level: B 2003

WINDOW COMPARATIVE ANALYSIS CHART FOR 3/16" TEMPERED					
		FIN FRAME		DESIGN LOAD CAPACITY - (PFS)	
HEIGHT INCHES	WIDTH INCHES	QTY OF ANCHORS	AVG. ANCHOR SPACING (IN)	POSITIVE	NEGATIVE
24	18	9	9	120.0	210
36	18	14	7	120.0	210
48	18	18	7	120.0	210
60	18	23	6	120.0	210
72	18	27	6	120.0	210
84	18	32	6	120.0	210
96	18	36	6	120.0	210
108	18	38	6	120.0	196
120	18	33	8	120.0	154
132	18	29	10	120.0	121
144	18	26	12	101.0	101
148	18	25	13	93.6	93.6
156	18				
24	24	12	8	120.0	210
36	24	18	6	120.0	210
48	24	24	6	120.0	210
60	24	30	5	120.0	210
72	24	36	5	120.0	210
84	24	42	5	120.0	210
96	24	47	5	120.0	202
108	24	51	5	120.0	196
120	24	44	6	120.0	154
132	24	39	8	120.0	121
144	24	34	9	98.8	98.8
148	24	33	10	93.6	93.6
156	24				
24	30	15	7	120.0	210
36	30	23	5	120.0	210
48	30	30	5	120.0	210
60	30	31	5	120.0	170
72	30	32	6	120.0	147
84	30	34	6	120.0	133
96	30	36	7	120.0	124
108	30	39	7	119.0	119
120	30	46	7	115.0	115
132	30				
144	30				
148	30				
156	30				
24	36	18	6	120.0	210
36	36	27	5	120.0	210
48	36	34	4	120.0	198
60	36	33	5	120.0	153
72	36	32	6	120.0	121
84	36	31	7	101.0	101
96	36	32	8	90.5	90.5
108	36				
120	36				
132	36				
144	36				
148	36				
156	36				
24	48	24	6	120.0	210
36	48	34	4	120.0	198
48	48	39	4	120.0	167
60	48	40	5	120.0	139
72	48	39	6	113.0	113
84	48				
96	48				
108	48				
120	48				
132	48				
144	48				
148	48				
156	48				

WINDOW COMPARATIVE ANALYSIS CHART FOR 3/16" TEMPERED					
		FIN FRAME		DESIGN LOAD CAPACITY - (PFS)	
HEIGHT INCHES	WIDTH INCHES	QTY OF ANCHORS	AVG. ANCHOR SPACING (IN)	POSITIVE	NEGATIVE
24	60	30	5	120.0	210
36	60	33	5	120.0	153
48	60	40	5	120.0	139
60	60	43	5	118.0	118
72	60				
84	60				
96	60				
108	60				
120	60				
132	60				
144	60				
148	60				
156	60				
24	72	36	5	120.0	210
36	72	32	6	120.0	121
48	72	39	6	113.0	113
60	72				
72	72				
84	72				
96	72				
108	72				
120	72				
132	72				
144	72				
148	72				
156	72				
24	84	42	5	120.0	210
36	84	31	7	101.0	101
48	84				
60	84				
72	84				
84	84				
96	84				
108	84				
120	84				
132	84				
144	84				
148	84				
156	84				
19.125	26	11	8	120.0	210
26.5	26	15	7	120.0	210
37	26	21	6	120.0	210
53.125	26	29	5	120.0	210
19.125	38.375	16	7	120.0	210
26.5	38.375	22	5	120.0	210
37	38.375	30	5	120.0	210
53.125	38.375	35	5	120.0	171
19.125	50.625	21	6	120.0	210
26.5	50.625	28	5	120.0	210
37	50.625	35	5	120.0	184
53.125	50.625	41	5	120.0	150
19.125	58	24	6	120.0	210
26.5	58	32	5	120.0	208
37	58	34	5	120.0	158
53.125	58	41	5	120.0	133
19.125	63	26	6	120.0	210
26.5	63	33	5	120.0	197
37	63	34	5	120.0	143
53.125	63	41	5	120.0	123
19.125	74.25	30	6	120.0	210
26.5	74.25	35	5	120.0	179
37	74.25	32	6	115.0	115
53.125	74.25				

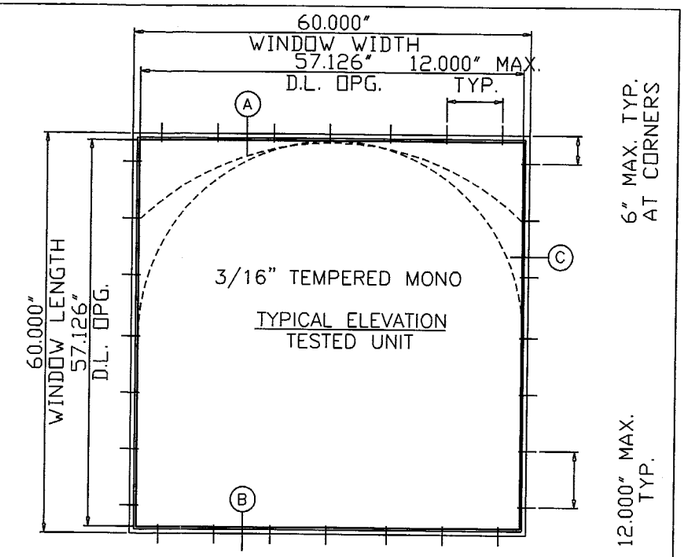

UNIT PERFORMANCE DATA

REPORT #FTL-3626

TEST SIZE = 60" wide X 60" hi (O)
DESIGN LOADS = +151.00, -151.00 PSF (PA-202)
STRUCTURAL TEST LOAD = +226.50, -226.50 PSF
WATER INFILTRATION TEST = 18.0 PSF @ #FTL-3619
DAYLIGHT OPENING = 57 1/8" wide X 57 1/8" hi
TESTED GLASS = 3/16" TEMPERED GLASS

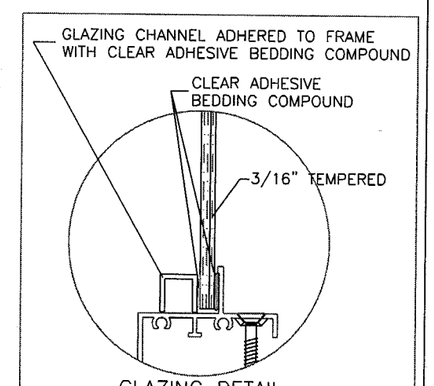

GLAZING DETAIL

Approved as complying with the Florida Buiding Code
Date 05/08/03
NOA# 03-0128.06
Miami Dade Product Control Division
By Gwendolyn Kennaway

WINDOWS TO BE PROTECTED WITH DADE COUNTY APPROVED IMPACT RESISTANT SHUTTERS

FLANGE FRAME ANCHORS ARE TO BE SPACED NOT GREATER THAN 6" FROM EACH CORNER, AND NOT GREATER THAN 10" CENTER TO CENTER. FIN FRAME ANCHORS SPACED AS TABULATED ABOVE.

THOMAS J. SOTOS
PROFESSIONAL ENGINEER
FL LIC. # 55225

DATE JAN 21 2003

Revision Notes:

Drawn By: Larry Magee
Date Drawn: 12/20/2002
Scale: AS NOTED

LAWSON INDUSTRIES, INC.
8501 NW 90th St.
MEDLEY, FLORIDA 33166
(305) 696-8660

MANUFACTURER OF QUALITY ALUMINUM WINDOWS AND GLASS DOORS

Draw Class:	Part Class:	Prod Category:	Series/Model:	Item:	Sheet:
LAYOUT					12 of 13

SERIES: 4000/6000 ALUMINUM FIXED WINDOWS
FIN/FLANGE FRAME WINDOW COMPARATIVE ANALYSIS & NOTES
3/16" TEMPERED GLASS

Part Number:
Drawing Number: LTU 4000/6000 COMPOSITE
Revision Level: B 2003

14/121

WINDOW COMPARATIVE ANALYSIS CHART FOR 3/16" TEMPERED - LOAD LIMITED TO 100 PSF
FTL-3626- 3/16" TEMPERED GLASS FLANGE FRAME

HEIGHT INCHES	WIDTH INCHES	DESIGN LOAD CAPACITY - (PFS) POSITIVE	DESIGN LOAD CAPACITY - (PFS) NEGATIVE
24	18	100	100
36	18	100	100
48	18	100	100
60	18	100	100
72	18	100	100
84	18	100	100
96	18	100	100
108	18	100	100
120	18	100	100
132	18	100	100
144	18	100	100
148	18	93.6	93.6
156	18		
24	24	100	100
36	24	100	100
48	24	100	100
60	24	100	100
72	24	100	100
84	24	100	100
96	24	100	100
108	24	100	100
120	24	100	100
132	24	100	100
144	24	98.8	98.8
148	24	93.6	93.6
156	24		
24	30	100	100
36	30	100	100
48	30	100	100
60	30	100	100
72	30	100	100
84	30	100	100
96	30	100	100
108	30	100	100
120	30	100	100
132	30		
144	30		
148	30		
156	30		
24	36	100	100
36	36	100	100
48	36	100	100
60	36	100	100
72	36	100	100
84	36	100	100
96	36	90.5	90.5
108	36		
120	36		
132	36		
144	36		
148	36		
156	36		
24	48	100	100
36	48	100	100
48	48	100	100
60	48	100	100
72	48	100	100
84	48		
96	48		
108	48		
120	48		
132	48		
144	48		
148	48		
156	48		

HEIGHT INCHES	WIDTH INCHES	DESIGN LOAD CAPACITY - (PFS) POSITIVE	DESIGN LOAD CAPACITY - (PFS) NEGATIVE
24	60	100	100
36	60	100	100
48	60	100	100
60	60	100	100
72	60		
84	60		
96	60		
108	60		
120	60		
132	60		
144	60		
148	60		
156	60		
24	72	100	100
36	72	100	100
48	72	100	100
60	72		
72	72		
84	72		
96	72		
108	72		
120	72		
132	72		
144	72		
148	72		
156	72		
24	84	100	100
36	84	100	100
48	84		
60	84		
72	84		
84	84		
96	84		
108	84		
120	84		
132	84		
144	84		
148	84		
156	84		
19.125	26	100	100
26.5	26	100	100
37	26	100	100
53.125	26	100	100
19.125	38.375	100	100
26.5	38.375	100	100
37	38.375	100	100
53.125	38.375	100	100
19.125	50.625	100	100
26.5	50.625	100	100
37	50.625	100	100
53.125	50.625	100	100
19.125	58	100	100
26.5	58	100	100
37	58	100	100
53.125	58	100	100
19.125	63	100	100
26.5	63	100	100
37	63	100	100
53.125	63	100	100
19.125	74.25	100	100
26.5	74.25	100	100
37	74.25	100	100
53.125	74.25		

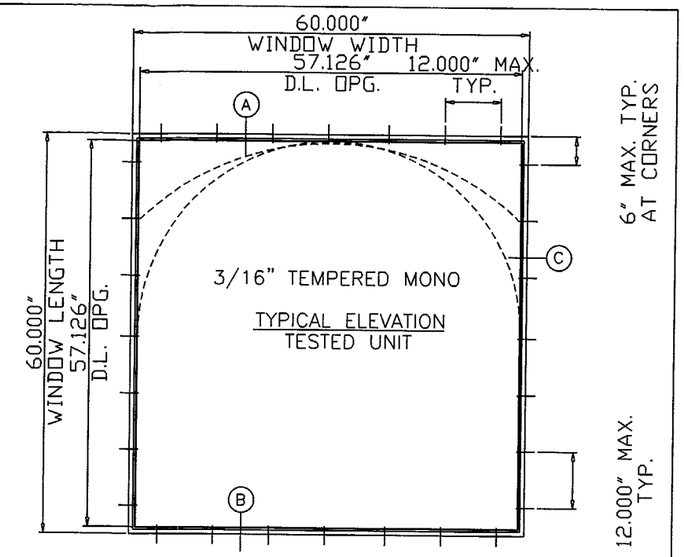

UNIT PERFORMANCE DATA

REPORT #FTL-3626

TEST SIZE = 60" wide X 60" hi (O)
DESIGN LOADS = +151.00, -151.00 PSF (PA-202)
STRUCTURAL TEST LOAD = +226.50, -226.50 PSF
WATER INFILTRATION TEST = 18.0 PSF @ #FTL-3619
DAYLIGHT OPENING = 57 1/8" wide X 57 1/8" hi
TESTED GLASS = 3/16" TEMPERED GLASS

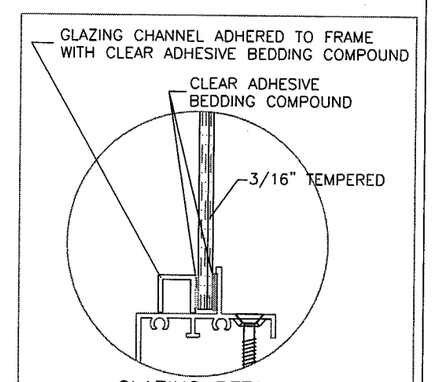

GLAZING DETAIL

Approved as complying with the
Florida Buiding Code
Date 05/08/03
NOA# 03-0128.06
Miami Dade Product Control
Division
By

WINDOWS TO BE PROTECTED WITH DADE COUNTY APPROVED IMPACT RESISTANT SHUTTERS

FLANGE FRAME ANCHORS ARE TO BE SPACED NOT GREATER THAN 6" FROM EACH CORNER, AND NOT GREATER THAN 12" CENTER TO CENTER.

THOMAS J. SOTOS
PROFESSIONAL ENGINEER
FL LIC. # 55225

JAN 21 2003
DATE_____

Revision Notes:

Drawn By: Larry Magee
Date Drawn: 12/20/2002
Scale: AS NOTED

LAWSON INDUSTRIES, INC.
8501 NW 90th St.
MEDLEY, FLORIDA 33166
(305) 696-8660

MANUFACTURER OF QUALITY ALUMINUM WINDOWS AND GLASS DOORS

Draw Class:	Part Class:	Prod Category:	Series/Model:	Item:	Sheet:
LAYOUT					13 of 13

SERIES: 4000/6000 ALUMINUM FIXED WINDOWS
FLANGE FRAME WINDOW COMPARATIVE ANALYSIS & NOTES
3/16" TEMPERED GLASS - LOAD LIMITED TO 100PSF

Part Number:
Drawing Number: LTU 4000/6000 COMPOSITE
Revision Level: B 2003

140
121