MIAMI-DADE

BUILDING CODE COMPLIANCE OFFICE (BCCO)
PRODUCT CONTROL DIVISION

MIAMI-DADE COUNTY, FLORIDA
METRO-DADE FLAGLER BUILDING
140 WEST FLAGLER STREET, SUITE 1603
MIAMI, FLORIDA 33130-1563
(305) 375-2901 FAX (305) 375-2908

NOTICE OF ACCEPTANCE (NOA)

Clopay Building Products Co.
8585 Duke Blvd.
Mason, OH 45040

SCOPE: This NOA is being issued under the applicable rules and regulations governing the use of construction materials. The documentation submitted has been reviewed by Miami-Dade County Product Control Division and accepted by the Board of Rules and Appeals (BORA) to be used in Miami Dade County and other areas where allowed by the Authority Having Jurisdiction (AHJ).

This NOA shall not be valid after the expiration date stated below. The Miami-Dade County Product Control Division (In Miami Dade County) and/or the AHJ (in areas other than Miami Dade County) reserve the right to have this product or material tested for quality assurance purposes. If this product or material fails to perform in the accepted manner, the manufacturer will incur the expense of such testing and the AHJ may immediately revoke, modify, or suspend the use of such product or material within their jurisdiction. BORA reserves the right to revoke this acceptance, if it is determined by Miami-Dade County Product Control Division that this product or material fails to meet the requirements of the applicable building code.

This product is approved as described herein, and has been designed to comply with the High Velocity Hurricane Zone of the Florida Building Code.

DESCRIPTION: Sectional Garage Door12'- 2" Wide.

APPROVAL DOCUMENT: Drawing No. 102085, titled "Holmes Modes 240W8", dated 12/08/99 & 02/18/00 with last revision on May 2000, sheets 1 of 1, prepared by Clopay Building Products, signed and sealed by M.W. Westerfield, P.E., bearing the Miami-Dade County Product Control Renewal stamp with the Notice of Acceptance number and expiration date by the Miami-Dade County Product Control Division.

MISSILE IMPACT RATING: Large and Small Missile Impact

LABELING: Each unit shall bear a permanent label with the manufacturer's name or logo, city, state and following statement: "Miami-Dade County Product Control Approved", unless otherwise noted herein.

RENEWAL of this NOA shall be considered after a renewal application has been filed and there has been no change in the applicable building code negatively affecting the performance of this product.

TERMINATION of this NOA will occur after the expiration date or if there has been a revision or change in the materials, use, and/or manufacture of the product or process. Misuse of this NOA as an endorsement of any product, for sales, advertising or any other purposes shall automatically terminate this NOA. Failure to comply with any section of this NOA shall be cause for termination and removal of NOA.

LIMITATION: This approval requires the manufacturer to do testing of all coils used to fabricate door panels under this Notice of Acceptance. A minimum of 2 specimens shall be cut from each coil and tensile tested according to ASTM E-8 by a Dade County approved laboratory selected and paid by the manufacturer. Every 3 months, four times a year, the manufacturer shall mail to this office: a copy of the tested reports with confirmation that the specimen were selected from coils at the manufacturer production facilities. And a notarized statement from the manufacturer that only coils with yield strength of 28900 psi or more shall be used to make door panels for Dade County under this Notice of Acceptance

ADVERTISEMENT: The NOA number preceded by the words Miami-Dade County, Florida, and followed by the expiration date may be displayed in advertising literature. If any portion of the NOA is displayed, then it shall be done in its entirety.

INSPECTION: A copy of this entire NOA shall be provided to the user by the manufacturer or its distributors and shall be available for inspection at the job site at the request of the Building Official.

This NOA renews NOA # 00-0224.02 consists of this page 1 as well as the approval document mentioned above.

The submitted documentation was reviewed by **Candido F. Font PE.**

5/29/3

PRODUCT CONTROL ACCEPTED

Clopay Building Products Co.

NOTICE OF ACCEPTANCE: EVIDENCE SUBMITTED
(For File ONLY. Not part of NOA)

A. DRAWINGS

1. *Drawing prepared by Clopay Building Products Company, titled "Holmes Modes 240W8", drawing No.102085, dated 12/08/99 & on 02/18/00, with latest revision on 05/2000, sheets 1 of 1, signed and sealed by M. W. Westerfield, PE.*

B. TESTS

1. *Test report of uniform static air pressure test, large missile impact test and cyclic wind pressure test of "12'-2"x 8" model 3200 24 ga. Exterior and 27 ga. Interior skin", prepared by American Test Lab of South Florida, report No. ATL 1217.03-96, dated 12/23/96, signed and sealed by W. Mehner PE.*

C. CALCULATIONS

1. *Calculations dated 01/10/97; pages 1 and 2, prepared by M. W. Westerfield, signed and sealed by M. W. Westerfield, PE.*

D. MATERIAL CERTIFICATIONS

1. *Tensile test report No. 9KM-2439, prepared by Q.C. Metallurgical, Inc., dated 12/28/99, signed and sealed by Robert Kelly.*
2. *Underwriters Laboratories, Inc., test report, of Flame Spread & Smoke Developed, reference No. R6705 & 96NK12530, dated by 05/24/96 and signed by R. K. Laymon.*
3. *U.S. Testing Company, Inc., test report of Ignition Properties, report No. 1188052, dated 05/17/96, signed and sealed by D. H. Mangnall, PE.*

E. STATEMENTS.

1. *Letter confirming that the Holmes brand door and Clopay brand door have the same design and both are manufacturer by Clopay Building Products Company. The letter is issued by Clopay Building Products Company, dated 01/27/00 and signed by M. Westerfield, PE.*
2. *Affidavit of minimum yield strength compliance prepared by Mark Westerfield employed by Clopay Building Products Company, signed by M. W.Westerfield and notarized by S. E. Rodenhauser on 05/05/03.*
3. *Letter of code compliance issued by Clopay Building Products, on 05/23/00, signed and sealed by M. Westerfield, PE.*
4. *Letter of no change issued by Clopay Building Products Co. on 03/06/03, signed and sealed by M. W. Westerfield, PE.*

Candido F. Font, PE.
Senior Product Control Division
NOA No 03-0311.06
Expiration Date: June 22, 2008
Approval Date: May 29, 2003

HOLMES MODEL 240W8

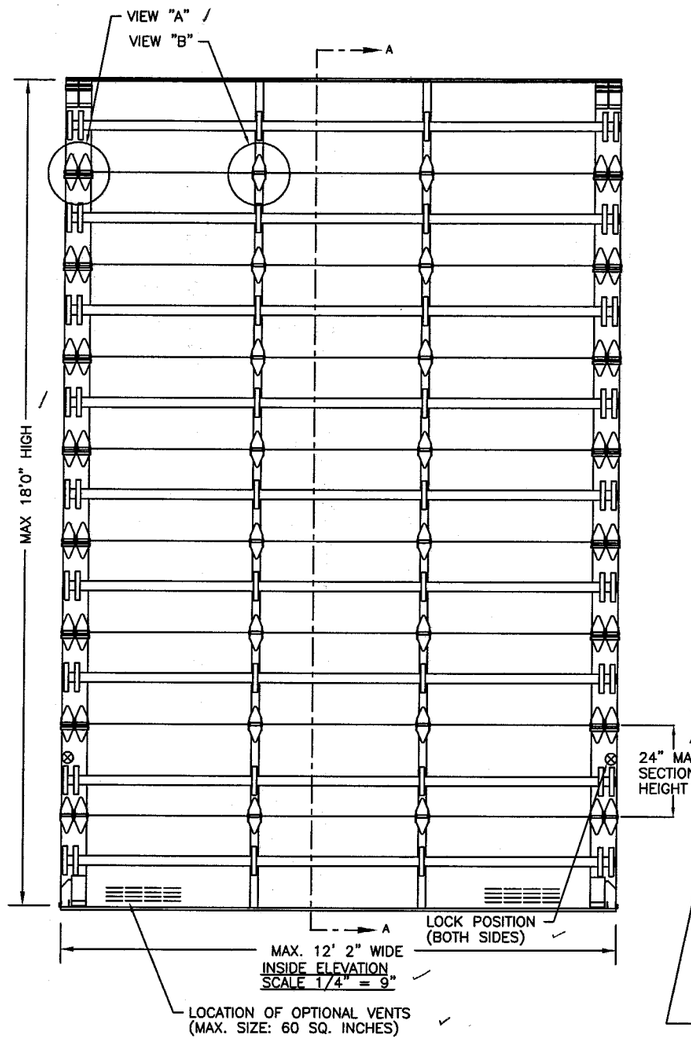

INSIDE ELEVATION
SCALE 1/4" = 9"

MODEL 240W8: 24 GA. EXTERIOR STEEL SKIN

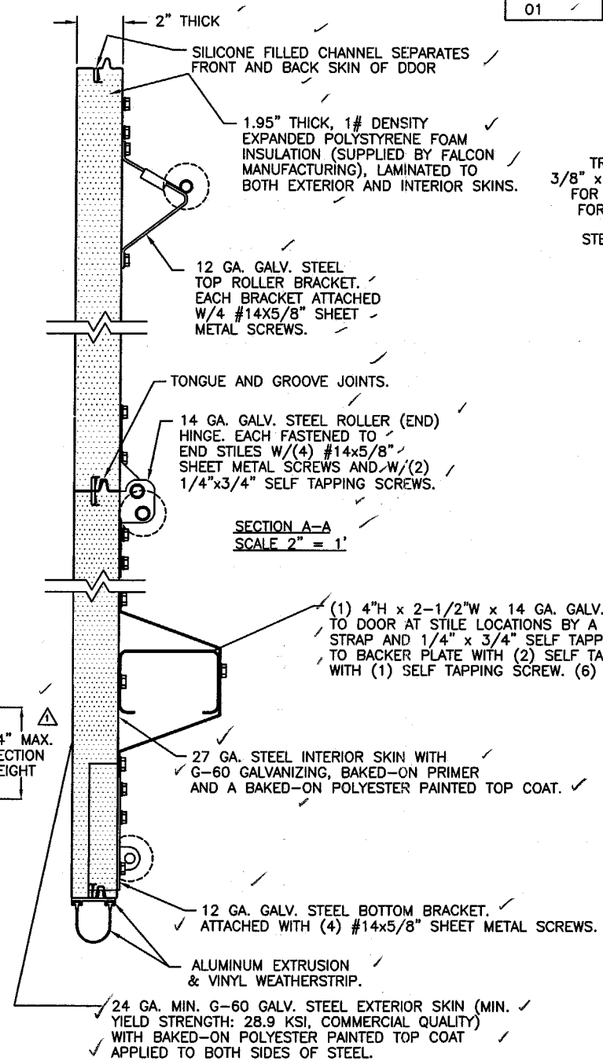

SECTION A-A
SCALE 2" = 1'

REVISIONS					
REV. NO.	ZONE:	DATE:	ECN NO.	APPVD:	DESCRIPTION
01	B3	5/2000			ADDED MAX. SECTION HEIGHT NOTE

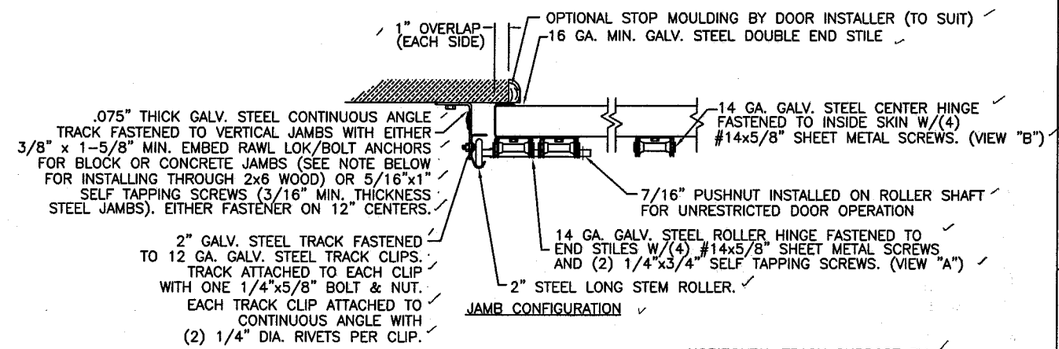

JAMB CONFIGURATION

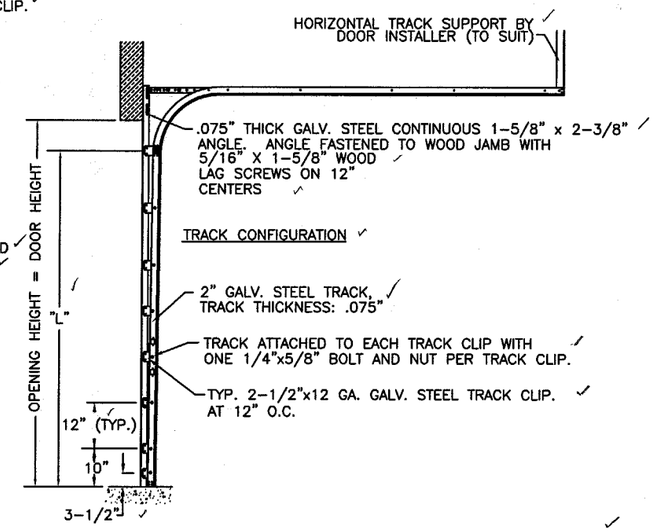

TRACK CONFIGURATION

DESIGN LOADS: +52.0 P.S.F. & -58.0 P.S.F.

NOTE: 2x6 WOOD JAMBS ARE NOT REQUIRED, HOWEVER, IF DESIRED ON CONCRETE OR BLOCK WALLS, 3/8" x 4" RAWL LOK/BOLT ANCHORS SHOULD BE INSTALLED DIRECTLY THROUGH THE ANGLE AND 2x6 WOOD JAMBS INTO THE CONCRETE OR BLOCK WALLS.

CONTINUOUS ANGLE TRACK CAN BE ANCHORED TO GROUT REINFORCED BLOCK WALL, CONCRETE COLUMN, OR 3/16" MIN. STEEL JAMBS. BLOCK CELLS SHALL BE FILLED WITH CONCRETE AND REINFORCED WITH CONTINUOUS #5 BAR EXTENDING INTO THE FOOTING AND INTO TIE BEAMS. ANCHORS CAN BE 3/8" x 1-5/8" MIN. EMBED RAWL LOK/BOLT ANCHOR (BLOCK OR CONCRETE JAMBS) STARTING AT NO MORE THAN 6" FROM BOTTOM AND 12" O.C., OR WITH 5/16"x1" SELF TAPPING SCREW (3/16" MIN. STEEL JAMBS) STARTING AT NO MORE THAN 6" FROM BOTTOM AND 12" O.C.

PRODUCT RENEWED
as complying with the Florida Building Code
Acceptance No. 03-0311.06
Expiration Date 6/22/08
By
Miami Dade Product Control Division

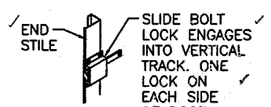

INSIDE SLIDE BOLT

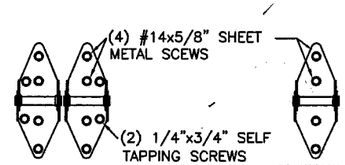

14 GA. END HINGE
SCALE 1" = 9"
VIEW "A"

14 GA. INTERMEDIATE HINGE
SCALE 1" = 9"
VIEW "B"

DESIGN ENGINEER
MARK W. WESTERFIELD, P.E.
MECHANICAL ENGINEERING
FLORIDA REGISTRATION No. 48495

3/6/03

Unless Stated Otherwise TOLERANCES are
.0 = ±.03
.00 = ±.015
.000 = ±.005
.0000 = ±.001
Degrees = ±1/2°
Unless Stated Otherwise DIMENSIONS ARE IN INCHES.

Third Angle Projection

CLOPAY BUILDING PRODUCTS COMPANY
8585 DUKE BLVD.
MASON, OH 45040
(513) 770-4800

HOLMES DOOR BRAND

DESCRIPTION: HOLMES MODES 240W8			
DRAWN BY: NJE	DATE: 12/8/99	SCALE:	DWG. SIZE B
CHECKED BY: MWW	DATE: 2/18/00	SHEET 1 OF 1	
DWG. NO.: 102085		REV. NO. 01	