MIAMI-DADE

BUILDING CODE COMPLIANCE OFFICE (BCCO)
PRODUCT CONTROL DIVISION

MIAMI-DADE COUNTY, FLORIDA
METRO-DADE FLAGLER BUILDING
140 WEST FLAGLER STREET, SUITE 1603
MIAMI, FLORIDA 33130-1563
(305) 375-2901 FAX (305) 375-2908

NOTICE OF ACCEPTANCE (NOA)

Clopay Building Products Co.
8585 Duke Blvd.
Mason, OH 45040

SCOPE: This NOA is being issued under the applicable rules and regulations governing the use of construction materials. The documentation submitted has been reviewed by Miami-Dade County Product Control Division and accepted by the Board of Rules and Appeals (BORA) to be used in Miami Dade County and other areas where allowed by the Authority Having Jurisdiction (AHJ).

This NOA shall not be valid after the expiration date stated below. The Miami-Dade County Product Control Division (In Miami Dade County) and/or the AHJ (in areas other than Miami Dade County) reserve the right to have this product or material tested for quality assurance purposes. If this product or material fails to perform in the accepted manner, the manufacturer will incur the expense of such testing and the AHJ may immediately revoke, modify, or suspend the use of such product or material within their jurisdiction. BORA reserves the right to revoke this acceptance, if it is determined by Miami-Dade County Product Control Division that this product or material fails to meet the requirements of the applicable building code.

This product is approved as described herein, and has been designed to comply with the High Velocity Hurricane Zone of the Florida Building Code.

DESCRIPTION: Sectional Garage Door 16'- 2" Wide.

APPROVAL DOCUMENT: Drawing No. 102160, titled "Ideal Model 4RST/H4ST W8 Max Size: 16'2" x 12'0", dated 05/31/00 with last revision on 08/01/03, sheets 1 and 2, prepared by Clopay Building Products, signed and sealed by M.W. Westerfield, P.E., bearing the Miami-Dade County Product Control Renewal stamp with the Notice of Acceptance number and expiration date by the Miami-Dade County Product Control Division.

MISSILE IMPACT RATING: Large and Small Missile Impact

LABELING: Each unit shall bear a permanent label with the manufacturer's name or logo, city, state and following statement: "Miami-Dade County Product Control Approved", unless otherwise noted herein.

RENEWAL of this NOA shall be considered after a renewal application has been filed and there has been no change in the applicable building code negatively affecting the performance of this product.

TERMINATION of this NOA will occur after the expiration date or if there has been a revision or change in the materials, use, and/or manufacture of the product or process. Misuse of this NOA as an endorsement of any product, for sales, advertising or any other purposes shall automatically terminate this NOA. Failure to comply with any section of this NOA shall be cause for termination and removal of NOA.

LIMITATION: This approval requires the manufacturer to do testing of all coils used to fabricate door panels under this Notice of Acceptance. A minimum of 2 specimens shall be cut from each coil and tensile tested according to ASTM E-8 by a Dade County approved laboratory selected and paid by the manufacturer. Every 3 months, four times a year, the manufacturer shall mail to this office: a copy of the tested reports with confirmation that the specimen were selected from coils at the manufacturer production facilities. And a notarized statement from the manufacturer that only coils with yield strength of 38000 psi or more shall be used to make door panels for Dade County under this Notice of Acceptance

ADVERTISEMENT: The NOA number preceded by the words Miami-Dade County, Florida, and followed by the expiration date may be displayed in advertising literature. If any portion of the NOA is displayed, then it shall be done in its entirety.

INSPECTION: A copy of this entire NOA shall be provided to the user by the manufacturer or its distributors and shall be available for inspection at the job site at the request of the Building Official.

This NOA revises and renews NOA # 01-0130.14 and consists of this page 1 as well as the approval document mentioned above.

The submitted documentation was reviewed by **Candido E. Font PE.**

9/4/03

PRODUCT CONTROL ACCEPTED

Clopay Building Products Co.

NOTICE OF ACCEPTANCE: EVIDENCE SUBMITTED
(For File ONLY. Not part of NOA)

A. DRAWINGS

1. *Drawing prepared by Clopay Building Products Company, titled "Ideal Models 4RST/H4ST W8 Max Size: 16'2" x 12'0", Drawing No.102160, dated 05/31/00, with latest revision on 08/01/03, sheets 1 and 2, signed and sealed by M. W. Westerfield, PE.*

B. TESTS

1. *Test report of large missile impact test per PA 201 and cyclic wind pressure test per PA 203 on Garage Door16'-2"w x 8'h, prepared by Hurricane Engineering & Testing, Inc report No. HETI 95-408, dated 01/25/95, signed and sealed by H. M. Medina, PE.*
2. *Test report of uniform static air pressure test per PA 202 on Garage Door 16'-2"w x 8'h, prepared by Hurricane Engineering & Testing, report No. HETI 95-407, dated 01/24/95, signed and sealed by H. M. Medina, PE.*
3. *Test report of Force Entry on Garage Door 16'-2"w x 8'h, prepared by Hurricane Engineering & Testing, report No. HETI 95-407f, dated 01/25/95, signed and sealed by H. M. Medina, PE.*

C. CALCULATIONS

1. *Calculations dated 01/20/957; pages 1 through 2, prepared by M. W. Westerfield, signed and sealed by M. W. Westerfield, PE.*
2. *Calculations dated 02/24/95, page 1, prepared by M.W. Westerfield signed and sealed by M. W. Westerfield, PE*
3. *Horizontal Track Deflection Calculation, prepared by M. W. Westerfield on 1 sheet signed and sealed by M.W. Westerfield, PE. on 08/01/03*
4. *Track change calculations prepared by M.W. Westerfield on sheets 1 and 2 signed and sealed by M.W. Westefield PE on 05/09/03.*

D. MATERIAL CERTIFICATIONS

1. *Tensile test report No. HETI 94-T59, prepared by Hurricane Engineering & Testing Inc., dated 02/06/95, signed and sealed by H. M. Medina, PE.*
2. *Salt Spray Exposure test report No. 9EM-1144, prepared by Metallurgical Inc dated08/03/99, signed and sealed by K. Grate, PE.*

E. STATEMENTS.

1. *Affidavit of minimum yield strength compliance prepared by M. Westerfield employed by Clopay Building Products Company, signed by M.W. Westerfield and notarized by S. E. Rodenhauser on 05/05/03.*
2. *Letter of code compliance prepared by Clopay Building Products Co. on 06/07/00 signed and sealed by M.W .Westerfield, PE.*

Candido F. Font, PE.
Senior Product Control Division
NOA No 03-0514.12
Expiration Date: September 14, 2008
Approval Date: September 04, 2003

IDEAL MODELS 4RST W8 (UP TO 8'0" HIGH), H4ST W8 (UP TO 12'0" HIGH)

REVISIONS					
REV. NO.	ZONE:	DATE:	ECN NO.	APPVD:	DESCRIPTION
1	C3	1/2001			DDS STEEL WAS DQSK; G-40 WAS G-60
02		5/03		MWW	ADDED EXTENDED HEIGHT MODELS
3	B2/C3	8/1/03		MWW	REVISED LOCK NOTE; ADD CENTER HANG NOTE FOR DOORS OVER 8' H

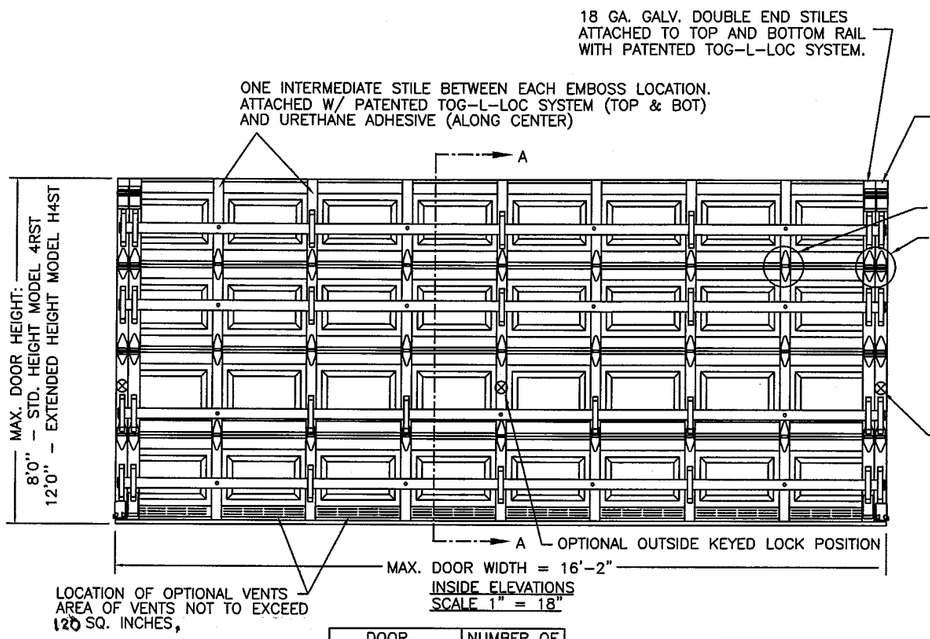

INSIDE ELEVATIONS
SCALE 1" = 18"

DOOR HEIGHT	NUMBER OF SECTIONS*
6'0" TO 7'0"	4
7'6" TO 8'9"	5
9'0" TO 10'6"	6
10'9" TO 12'0"	7

* - SECTIONS ARE EITHER 18" OR 21" HIGH

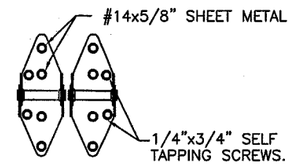

14 GA. END HINGES
SCALE 1" = 9"
VIEW "B"

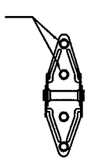

18 GA. INTERMEDIATE HINGE
SCALE 1" = 9"
VIEW "C"

3 LOCK POSITION (BOTH SIDES) TWO POINT LOCKING HAS BEEN TESTED PER REQUIREMENTS OF SECTION 12.1 OF TAS 202. LOCKS HAVE 5/8" MIN. ENGAGEMENT. DOOR TESTED FOR FORCED ENTRY WITH BOTH OUTSIDE KEYED LOCK AND INSIDE SLIDE BOLT LOCK OPTIONS (SEE LAYOUT OF EACH LOCK ON NEXT PAGE).

DOOR MODEL	
4RST/H4ST W8	WOODGRAIN TEXTURE, RAISED PANEL, PAINTED INTER. STILES (24 GA.)

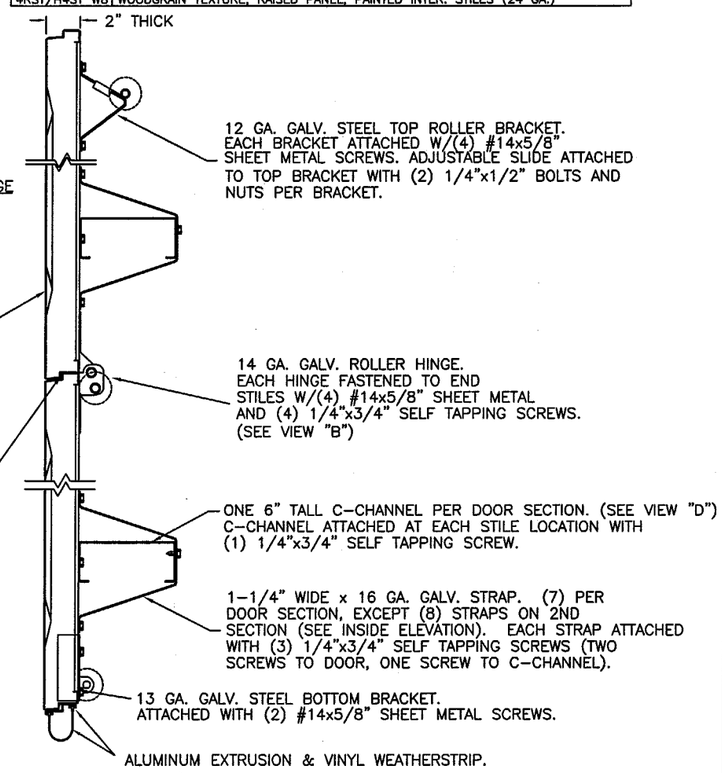

SECTION A-A (SIDE VIEW)
SCALE 1" = 9"

TRACK CONFIGURATION
STD HEIGHT MODEL 4RST W8
DOORS UP TO 8'0" HIGH

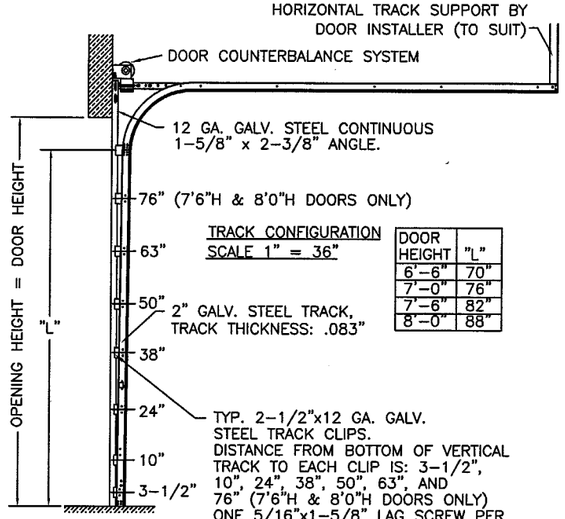

TRACK CONFIGURATION
SCALE 1" = 36"

DOOR HEIGHT	"L"
6'-6"	70"
7'-0"	76"
7'-6"	82"
8'-0"	88"

TRACK CONFIGURATION
EXTENDED HEIGHT MODEL H4ST W8
DOORS UP TO 12'0" HIGH

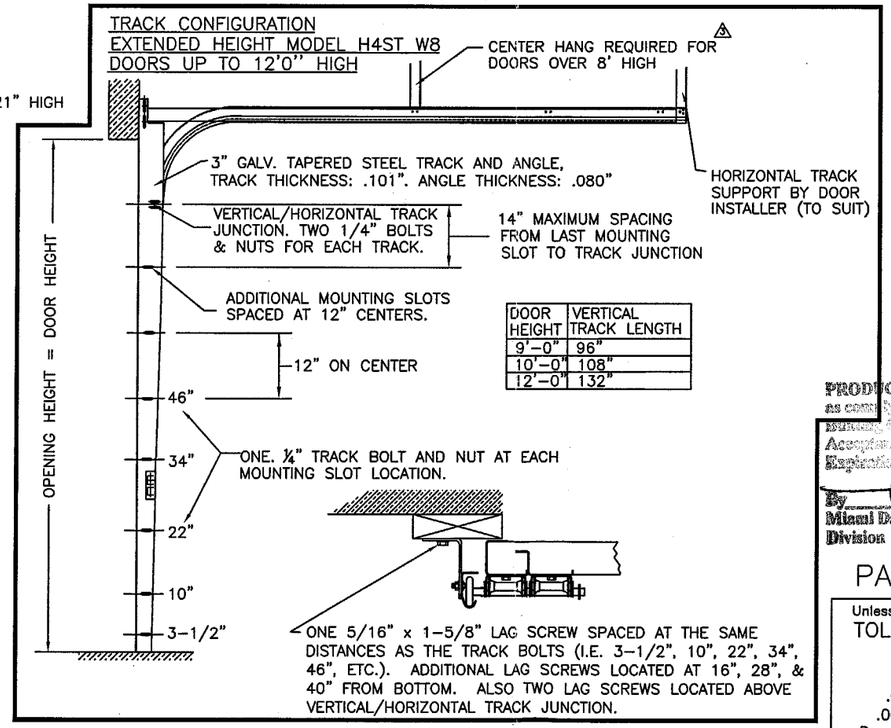

DOOR HEIGHT	VERTICAL TRACK LENGTH
9'-0"	96"
10'-0"	108"
12'-0"	132"

PRODUCT RENEWED as complying with the Florida Building Code
Acceptance No. 03-0514.12
Expiration Date 9/4/08
By Miami Dade Product Control Division

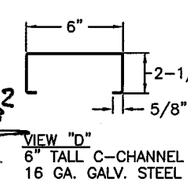

VIEW "D"
6" TALL C-CHANNEL
16 GA. GALV. STEEL

8/4/03

MARK WESTERFIELD, P.E.
FLORIDA P.E. #48495

PAGE 1 OF 2

DESIGN LOADS: +46.6 P.S.F. & -52.0 P.S.F. (MODEL 4RST W8)
DESIGN LOADS: +46.6 P.S.F. & -51.7 P.S.F. (MODEL H4ST W8)

Unless Stated Otherwise TOLERANCES are
.0 = ±.03
.00 = ±.015
.000 = ±.005
.0000 = ±.001
Degrees = ±1/2°
Unless Stated Otherwise DIMENSIONS ARE IN INCHES.

Third Angle Projection

CLOPAY BUILDING PRODUCTS COMPANY
8585 DUKE BLVD.
MASON, OH 45040
(513) 770-4800

IDEAL DOOR BRAND

DESCRIPTION: IDEAL MODEL 4RST/H4ST W8 MAX SIZE: 16'2" x 12'0"

DRAWN BY: BMM	DATE: 5/31/00	SCALE:	DWG. SIZE B
CHECKED BY: MWW	DATE: 5/31/00	SHEET 1 OF 2	
DWG. NO.: 102160		REV. NO. 3	

IDEAL MODELS 4RST W8 (UP TO 8'0" HIGH), H4ST W8 (UP TO 12'0" HIGH)

2x6 JAMB TO SUPPORTING STRUCTURE ATTACHMENT

NOTES:
1) ALL THE LOAD FROM THE DOOR IS TRANSFERRED TO THE TRACK AND THEN FROM THE TRACK TO THE 2x6 VERTICAL JAMBS (GRADE 2 OR BETTER YELLOW PINE). NO LOAD FROM THE DOOR IS TRANSFERRED TO THE HORIZONTAL (TOP) JAMB.
2) EACH VERTICAL JAMB SEES A MAXIMUM DESIGN LOAD OF +372.8 LB & −416 LB. PER LINEAR FOOT OF JAMB.
3) ALL JAMB FASTENERS MAY BE (BUT NOT REQUIRED) COUNTERSUNK TO PROVIDE A FLUSH MOUNTING SURFACE.

WOOD FRAME BUILDINGS

STUD WALLS OF DOOR OPENING SHALL BE FRAMED SOLID BY NOT LESS THAN (3) 2x6 PRESSURE TREATED GRADE #2 OR BETTER WOOD STUD OF A STRESS GRADE NOT LESS THAN 1200 PSI NOMINAL EXTREME FIBER STRESS IN BENDING (F_b) FOR DOORS UP TO 8'0" HIGH. STUD WALLS TO BE CONTINUOUS FROM FOOTING TO TIE BEAMS AND IN ACCORDANCE WITH THE FLORIDA BUILDING CODE. (4) 2x6 PRESSURE TREATED GRADE #2 OR BETTER WOOD STUD OF A STRESS GRADE NOT LESS THAN 1200 PSI NOMINAL EXTREME FIBER STRESS IN BENDING FOR DOORS UP TO 12'0" HIGH.

BLOCK WALL OR CONCRETE

2x6 WOOD JAMB SHALL BE ANCHORED TO GROUT REINFORCED BLOCK WALL OR CONCRETE COLUMN. BLOCK WALL CELLS SHALL BE FILLED WITH CONCRETE AND REINFORCED WITH #5 BAR EXTENDING INTO THE FOOTING AND INTO TIE BEAMS. ALL BARS SHALL BE CONTINUOUS FROM THE TIE BEAMS TO FOOTING PER BLOCK WALL OR CONCRETE COLUMN. BLOCK WALLS AND CONCRETE COLUMNS TO BE DESIGNED BY BUILDING PROFESSIONAL OF RECORD AND IN ACCORDANCE WITH THE FLORIDA BUILDING CODE.

2x6 JAMB TO SUPPORTING STRUCTURE ATTACHMENT

(NOT TO BE USED FOR ATTACHMENT OF TRACK ANGLE TO 2x6 VERTICAL JAMBS OR SUPPORTING STRUCTURE)

BUILDING TYPE	FASTENER TYPE	MAXIMUM ON-CENTER DISTANCE BETWEEN FASTENERS*	STEEL WASHERS REQUIRED?
WOOD FRAME	1/2" x 3" EMBED LAG SCREW (ASTM A307, GRADE A)	16"	YES
BLOCK WALL OR CONCRETE	1/4" x 1-3/4" MIN. EMBED TAPCON CONCRETE ANCHOR	10"	YES
BLOCK WALL OR CONCRETE	3/8" x 1-3/4" MIN. EMBED RAWL-STUD EXPANSION ANCHOR (7400 SERIES)	19"	NO
BLOCK WALL OR CONCRETE	3/8" x 1-3/4" MIN. EMBED RAWL LOK/BOLT ANCHOR BOLT (5000 SERIES)	16"	NO

MINIMUM DISTANCE BETWEEN CENTER OF ANCHOR AND EDGE OF CONCRETE BLOCK: 3", EXCLUDING STUCCO THICKNESS.
* FIRST (BOTTOM) ANCHOR STARTING AT NO MORE THAN HALF OF THE MAXIMUM ON-CENTER DISTANCE. HIGHEST ANCHOR INSTALLED AT LEAST AS HIGH AS THE DOOR OPENING.
CLOPAY DOES NOT SUPPLY JAMB ATTACHMENT FASTENERS.

REVISIONS

REV. NO.	ZONE:	DATE:	ECN NO.	APPVD:	DESCRIPTION
1	P. 1	1/2001			SEE PAGE 1
02		5/03		MWW	ADDED EXTENDED HEIGHT MODELS
3		8/1/03		MWW	SEE REVISIONS ON PAGE 1

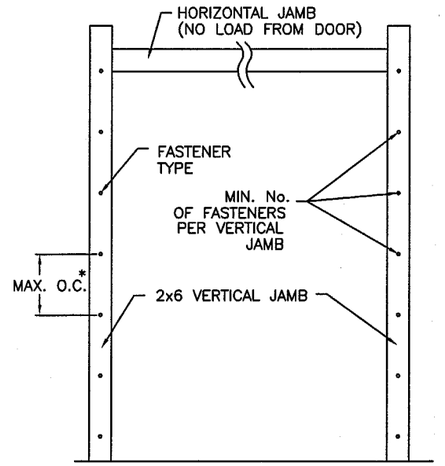

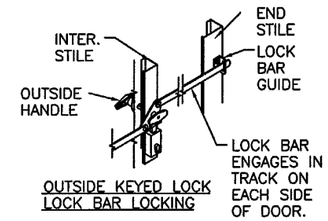

OUTSIDE KEYED LOCK
LOCK BAR LOCKING

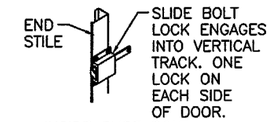

INSIDE SLIDE BOLT
LOCK OPTION

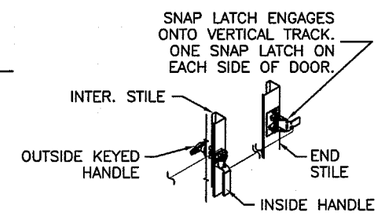

OUTSIDE KEYED LOCK
SNAP LATCH LOCK OPTION

PRODUCT RENEWED
as complying with the Florida Building Code
Acceptance No. 03-0514.12
Expiration Date 9/4/08
By
Miami Dade Product Control Division

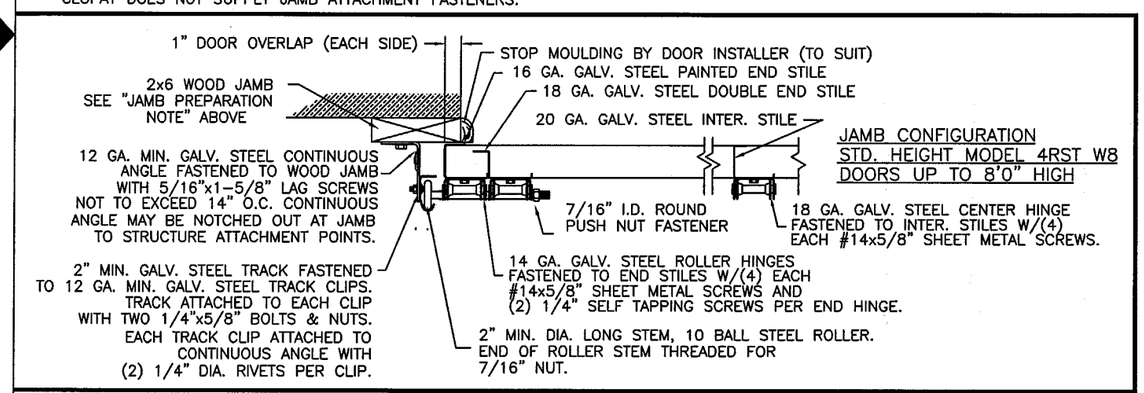

JAMB CONFIGURATION
STD. HEIGHT MODEL 4RST W8
DOORS UP TO 8'0" HIGH

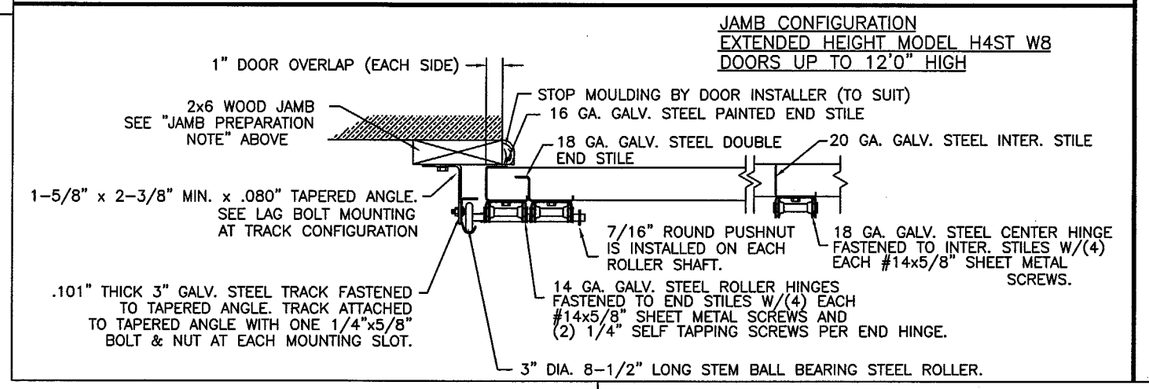

JAMB CONFIGURATION
EXTENDED HEIGHT MODEL H4ST W8
DOORS UP TO 12'0" HIGH

JAMB PREPARATION NOTE
EACH CONTINUOUS ANGLE TRACK SHALL BE FASTENED TO PRESSURE TREATED 2x6 YELLOW PINE WOOD JAMBS WITH 5/16"x1-5/8" LAG SCREWS (12) LAG SCREWS PER SIDE UP TO 7'0" HIGH AND (13) LAG SCREWS PER SIDE UP TO 8'0" HIGH, (14) LAG SCREWS PER SIDE UP TO 9'0" HIGH, (15) LAG SCREWS PER SIDE UP TO 10'0" HIGH, (16) LAG SCREWS PER SIDE UP TO 11'0" HIGH, (17) LAG SCREWS PER SIDE UP TO 12'0" HIGH. THE METHOD OF ATTACHMENT TO THE SUPPORTING STRUCTURE OF THE PRESSURE TREATED 2x6 WOOD JAMBS SHALL BE APPROVED BY THE PROFESSIONAL OF RECORD FOR THE STRUCTURE AND IN ACCORDANCE WITH CURRENT BUILDING CODES FOR THE LOADS LISTED ON THIS DRAWING. PREPARATION OF JAMBS BY OTHERS.

ALL MOUNTING OF TRACK, ANGLES, HORIZONTAL TRACK SUPPORTS, AND ALL OTHER DOOR HARDWARE TO BE INSTALLED PER CLOPAY INSTALLATION INSTRUCTIONS SUPPLIED WITH DOOR SYSTEM UNLESS OTHERWISE NOTED.

8/1/03

PAGE 2 OF 2

DESIGN ENGINEER
MARK W. WESTERFIELD, P.E.
FLORIDA REGISTRATION No. 48495

DESIGN LOADS: +46.6 P.S.F. & −52.0 P.S.F. (MODEL 4RST W8)
DESIGN LOADS: +46.6 P.S.F. & −51.7 P.S.F. (MODEL H4ST W8)

Unless Stated Otherwise TOLERANCES are
.0 = ±.03
.00 = ±.015
.000 = ±.005
.0000 = ±.001
Degrees = ±1/2°
Unless Stated Otherwise DIMENSIONS ARE IN INCHES.

Third Angle Projection

CLOPAY BUILDING PRODUCTS COMPANY
8585 DUKE BLVD.
MASON, OH 45040
(513) 770-4800

IDEAL DOOR BRAND

DESCRIPTION: IDEAL MODELS 4RST W8 MAX SIZE: 16'2" x 12'0"

DRAWN BY: BMM	DATE: 5/31/00	SCALE:	DWG. SIZE B
CHECKED BY: MWW	DATE: 5/31/00	SHEET 2 OF 2	
DWG. NO.: 102160		REV. NO. 3	