MIAMI-DADE

BUILDING CODE COMPLIANCE OFFICE (BCCO)
PRODUCT CONTROL DIVISION

MIAMI-DADE COUNTY, FLORIDA
METRO-DADE FLAGLER BUILDING
140 WEST FLAGLER STREET, SUITE 1603
MIAMI, FLORIDA 33130-1563
(305) 375-2901 FAX (305) 375-2908

NOTICE OF ACCEPTANCE (NOA)

Sunshine Windows Manufacturing, Inc.
1745 W. 33rd Place
Hialeah, FL 33012

SCOPE:
This NOA is being issued under the applicable rules and regulations governing the use of construction materials. The documentation submitted has been reviewed by Miami-Dade County Product Control Division and accepted by the Board of Rules and Appeals (BORA) to be used in Miami Dade County and other areas where allowed by the Authority Having Jurisdiction (AHJ).

This NOA shall not be valid after the expiration date stated below. The Miami-Dade County Product Control Division (In Miami Dade County) and/or the AHJ (in areas other than Miami Dade County) reserve the right to have this product or material tested for quality assurance purposes. If this product or material fails to perform in the accepted manner, the manufacturer will incur the expense of such testing and the AHJ may immediately revoke, modify, or suspend the use of such product or material within their jurisdiction. BORA reserves the right to revoke this acceptance, if it is determined by Miami-Dade County Product Control Division that this product or material fails to meet the requirements of the applicable building code.

This product is approved as described herein, and has been designed to comply with the High Velocity Hurricane Zone of the Florida Building Code.

DESCRIPTION: Series 4320 Aluminum Fixed Window

APPROVAL DOCUMENT: Drawing No. **PW-00-01**, titled "Series 4320 Aluminum Fixed Window", sheets 1 through 3 of 3, dated 8/24/00, prepared by the Francisco Hernandez P.E. Structural Engineering, signed and sealed by Francisco Hernandez, P.E., bearing the Miami-Dade County Product Control Renewal stamp with the Notice of Acceptance number and expiration date by the Miami-Dade County Product Control Division.

MISSILE IMPACT RATING: None

LABELING: Each unit shall bear a permanent label with the manufacturer's name or logo, city, state and following statement: "Miami-Dade County Product Control Approved", unless otherwise noted herein.

RENEWAL of this NOA shall be considered after a renewal application has been filed and there has been no change in the applicable building code negatively affecting the performance of this product.

TERMINATION of this NOA will occur after the expiration date or if there has been a revision or change in the materials, use, and/or manufacture of the product or process. Misuse of this NOA as an endorsement of any product, for sales, advertising or any other purposes shall automatically terminate this NOA. Failure to comply with any section of this NOA shall be cause for termination and removal of NOA.

ADVERTISEMENT: The NOA number preceded by the words Miami-Dade County, Florida, and followed by the expiration date may be displayed in advertising literature. If any portion of the NOA is displayed, then it shall be done in its entirety.

INSPECTION: A copy of this entire NOA shall be provided to the user by the manufacturer or its distributors and shall be available for inspection at the job site at the request of the Building Official.
This NOA **renews NOA # 00-0512.04** and consists of this page 1, evidence page(s), as well as approval document mentioned above.
The submitted documentation was reviewed by **Manuel Perez, P.E.**

PRODUCT CONTROL ACCEPTED

Sunshine Windows Manufacturing, Inc.

NOTICE OF ACCEPTANCE: EVIDENCE SUBMITTED

A. DRAWINGS

1. Manufacturer's die drawings and sections.
2. Drawing No. **PW-00-01**, titled "Series 4320 Aluminum Fixed Window", sheets 1 through 3 of 3, dated 8/24/00, revised on 8/25/03, prepared by the Francisco Hernandez P.E., Structural Engineering, signed and sealed by Francisco Hernandez, P.E.

B. TESTS

Submitted under NOA#00-0512.04

1. Test reports on 1) Air Infiltration Test, per FBC, TAS 202-94
   2) Uniform Static Air Pressure Test, Loading per FBC, TAS 202-94
   3) Water Resistance Test, per FBC, TAS 202-94
   along with installation diagram of a "Series 4230 Aluminum Fixed Window" w/ 3/16" Temp. glass, prepared by Fenestration Testing Laboratory, Inc., Report No. **FTL-1419**, dated April 16, 1996, signed and sealed by Gilbert Diamond, P.E.
2. Test reports on 1) Air Infiltration Test, per FBC, TAS 202-94
   2) Uniform Static Air Pressure Test, Loading per FBC, TAS 202-94
   3) Water Resistance Test, per FBC, TAS 202-94
   along with installation diagram of a "Series 4230 Aluminum Fixed Window" w/ 3/16" annealed glass, prepared by Fenestration Testing Laboratory, Inc., Report No. **FTL-1420**, dated April 2, 1996, signed and sealed by Gilbert Diamond, P.E.
3. Test reports on 1) Air Infiltration Test, per FBC, TAS 202-94
   2) Uniform Static Air Pressure Test, Loading per FBC, TAS 202-94
   3) Water Resistance Test, per FBC, TAS 202-94
   along with installation diagram of a "Series 4250 Aluminum Fixed Window" w/ 1/8" annealed glass, prepared by Fenestration Testing Laboratory, Inc., Report No. **FTL-1421**, dated April 2, 1996, signed and sealed by Gilbert Diamond, P.E.

C. CALCULATIONS

Submitted under NOA#00-0512.04

1. Structural comparative analysis calculations dated August 25, 2000, prepared, signed and sealed by Francisco Hernandez, P.E.
2. Revised calculations dated 8/25/03, prepared, signed and sealed by Francisco Hernandez, P.E. to comply with ASTM E1300-98.

D. QUALITY ASSURANCE

1. Miami Dade Building Code Compliance Office.

Manuel Perez

Manuel Perez, P.E.
Product Control Examiner
NOA No 03-0529.02
Expiration Date: September 16, 2008
Approval Date: September 25, 2003

NOTICE OF ACCEPTANCE: EVIDENCE SUBMITTED

E. MATERIAL CERTIFICATIONS

1. None

F. STATEMENTS

1. None

G. OTHER

1. Notice of Acceptance No. **00-0512.04** Sunshine Windows Manufacturing, Inc., for their "Series 4230 Aluminum Fixed Window", approved on 10/12/00 and expiring on 9/16/03.

Manuel Perez, P.E.
Product Control Examiner
NOA No 03-0529.02
Expiration Date: September 16, 2008
Approval Date: September 25, 2003

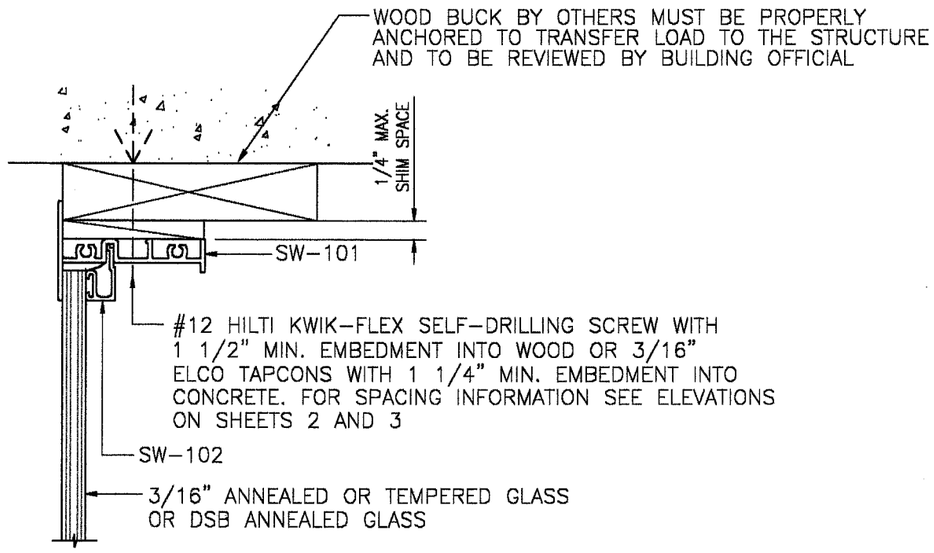

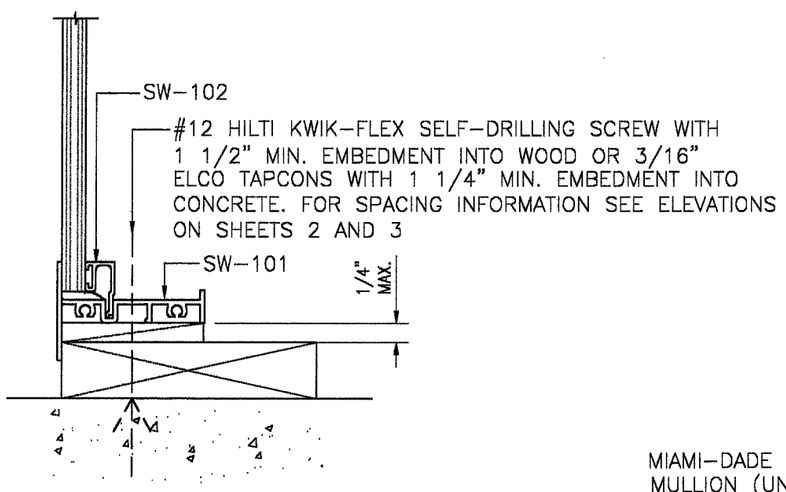

SECTION A - A

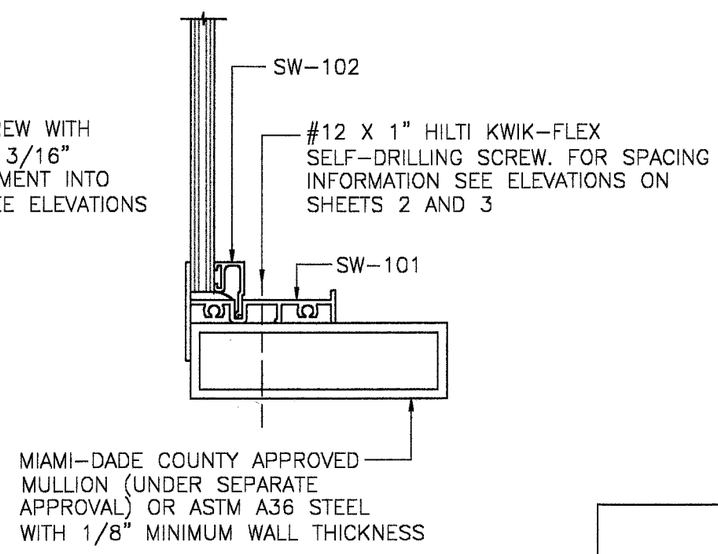

COMPARATIVE ANALYSIS TABLES ON SHEETS 2 AND 3 BASED ON THE FOLLOWING TESTS:

1.) FTL-1419 OF 04-02-96
TEST SIZE= 46" X 108 1/8"
TEST LOADS= +135.0 -135.0 PSF
DESIGN LOADS= +90.0 -90.0 PSF
WATER INFILTRATION TEST= 15 PSF
TESTED GLASS= 3/16" TEMPERED

2.) FTL-1420 OF 04-02-96
TEST SIZE= 37" X 74"
TEST LOADS= +60.0 -60.0 PSF
DESIGN LOADS= +40.0 -40.0 PSF
WATER INFILTRATION TEST= 12 PSF
TESTED GLASS= 3/16" ANNEALED

3.) FTL-1421 OF 04-02-96
TEST SIZE= 26 1/2" X 53 1/4"
TEST LOADS= +67.5 -67.5 PSF
DESIGN LOADS= +45.0 -45.0 PSF
WATER INFILTRATION TEST= 12 PSF
TESTED GLASS= DSB ANNEALED

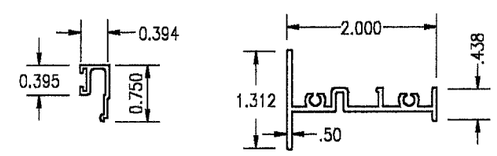

PART No. SW-102
GLAZING BEAD
6063-T6

PART No. SW-101
FRAME
6063-T6

PRODUCT RENEWED
as complying with the Florida Building Code
Acceptance No 03-0529.02
Expiration Date SEPT. 16, 2008
By Miami-Dade Product Control Division

8-29-03
FRANCISCO HERNANDEZ
FLORIDA PE # 51393

Sunshine Windows Manufacturing, Inc.
1745 W. 33rd Place
Hialeah, Florida 33012
Ph: (305)364-9952
Fax:(305)828-5118

FRANCISCO HERNANDEZ P. E.
Structural Engineering
15113 SW 35 Terr.
Miami, Florida 33185
Phone (305) 227-6901

SERIES 4230 ALUMINUM FIXED WINDOW

Drawn By: MH
Date: 8-24-00
Scale: 1/2"=1"
Revision: 8-25-03
Revision:

DRAWING No: PW-00-01

SHEET 1 OF 3

WINDOW SIZE L X S INCHES	DESIGN PRESSURE CHART - PSF					
	3/16" TEMPERED GLASS		3/16" ANNEALED GLASS		DSB ANNEALED GLASS	
	POS.	NEG.	POS.	NEG.	POS.	NEG.
120 X 40	61.30	61.30	–	–	–	–
120 X 37	68.80	68.80	–	–	–	–
120 X 26	100.00	135.00	–	–	–	–
108 X 46	63.30	63.30	–	–	–	–
108 X 40	67.60	67.60	–	–	–	–
108 X 37	74.00	74.00	–	–	–	–
108 X 26	100.00	139.00	–	–	–	–
96 X 50	76.30	76.30	–	–	–	–
96 X 46	76.20	76.20	–	–	–	–
96 X 40	77.40	77.40	–	–	–	–
96 X 37	81.10	81.10	–	–	–	–
96 X 26	100.00	144.99	36.20	36.20	–	–
91 X 54	76.67	76.67	–	–	–	–
91 X 50	81.10	81.10	–	–	–	–
91 X 46	81.30	81.30	–	–	–	–
91 X 40	81.70	81.70	–	–	–	–
91 X 37	84.80	84.80	–	–	–	–
91 X 26	100.00	146.25	36.90	36.90	–	–
91 X 19	100.00	191.54	65.23	65.23	–	–
84 X 58	71.38	71.38	–	–	–	–
84 X 54	76.67	76.67	–	–	–	–
84 X 50	82.80	82.80	–	–	–	–
84 X 46	90.00	90.00	–	–	–	–
84 X 40	91.50	91.50	–	–	–	–
84 X 37	93.40	93.40	–	–	–	–
84 X 26	100.00	148.31	38.10	38.10	–	–
84 X 19	100.00	193.42	65.87	65.87	–	–
78 X 63	65.71	65.71	–	–	–	–
78 X 58	71.38	71.38	–	–	–	–
78 X 54	76.67	76.67	–	–	–	–
78 X 50	82.80	82.80	–	–	–	–
78 X 46	90.00	90.00	–	–	–	–
78 X 40	100.00	101.00	–	–	–	–
78 X 37	100.00	102.00	–	–	–	–
78 X 26	100.00	150.43	39.20	39.20	–	–
78 X 19	100.00	195.34	66.52	66.52	–	–

WINDOW SIZE L X S INCHES	DESIGN PRESSURE CHART - PSF					
	3/16" TEMPERED GLASS		3/16" ANNEALED GLASS		DSB ANNEALED GLASS	
	POS.	NEG.	POS.	NEG.	POS.	NEG.
74 X 66	62.73	62.73	–	–	–	–
74 X 63	65.71	65.71	–	–	–	–
74 X 58	71.38	71.38	–	–	–	–
74 X 54	76.67	76.67	–	–	–	–
74 X 50	82.80	82.80	–	–	–	–
74 X 46	90.00	90.00	–	–	–	–
74 X 40	100.00	103.50	–	–	–	–
74 X 37	100.00	109.00	–	–	–	–
74 X 26	100.00	152.08	40.10	40.10	–	–
74 X 19	100.00	196.81	67.03	67.03	30.40	30.40
63 X 58	71.38	71.38	–	–	–	–
63 X 54	76.67	76.67	–	–	–	–
63 X 50	82.80	82.80	29.60	29.60	–	–
63 X 46	90.00	90.00	31.40	31.40	–	–
63 X 40	100.00	103.50	33.20	33.20	–	–
63 X 37	100.00	111.89	33.80	33.80	–	–
63 X 26	100.00	157.95	44.20	44.20	–	–
63 X 19	100.00	202.01	68.79	68.79	32.50	32.50
53 X 50	82.80	82.80	29.60	29.60	–	–
53 X 46	90.00	90.00	32.17	32.17	–	–
53 X 40	100.00	103.50	37.00	37.00	–	–
53 X 37	100.00	111.89	40.00	40.00	–	–
53 X 26	100.00	159.23	50.30	50.30	–	–
53 X 19	100.00	209.01	71.18	71.18	36.00	36.00
46 X 40	100.00	103.50	37.00	37.00	–	–
46 X 37	100.00	111.89	40.00	40.00	–	–
46 X 26	100.00	159.23	56.92	56.92	34.70	34.70
46 X 19	100.00	210.00	73.63	73.63	34.60	34.60
38 X 37	100.00	111.89	40.00	40.00	32.23	32.23
38 X 26	100.00	159.23	56.92	56.92	43.30	43.30
38 X 19	100.00	210.00	77.89	77.89	48.20	48.20
26 X 26	100.00	159.23	56.92	56.92	45.87	45.87
26 X 19	100.00	210.00	77.89	77.89	62.76	62.76

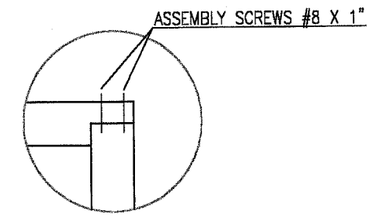

TYP 90° CORNER DETAIL

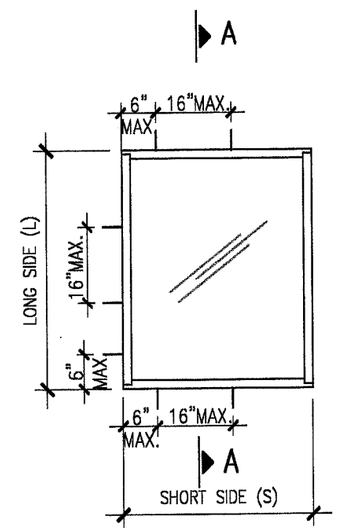

RECTANGLE
TYPICAL ELEVATION

PRODUCT RENEWED
as complying with the Florida
Buiding Code
Acceptance No 03-0529.02
Expiration Date SEPT. 16, 2008
By Manuel Perez
Miami Dade Product Control
Division

8-25-03
FRANCISCO HERNANDEZ
FLORIDA PE # 51393

Sunshine Windows
Manufacturing, Inc.
1745 W. 33rd Place
Hialeah, Florida 33012
Ph: (305)364-9952
Fax:(305)828-5118

FRANCISCO HERNANDEZ P. E.
Structural Engineering
15113 SW 35 Terr.
Miami, Florida 33185
Phone (305) 227-6901

SERIES 4230 ALUMINUM
FIXED WINDOW

Drawn By: MH
Date: 8-24-00
Scale: 3/8"=1'
Revision: 8-25-03
Revision:

DRAWING NO.
PW-00-01

SHEET
2 OF 3

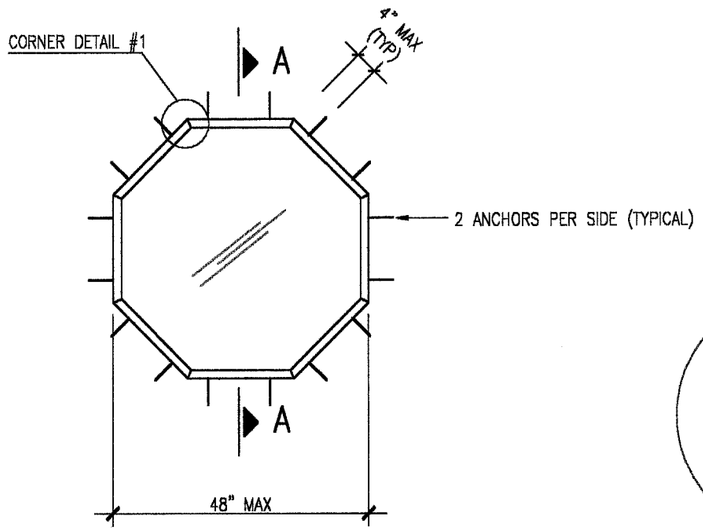

OCTAGON
TYPICAL ELEVATION

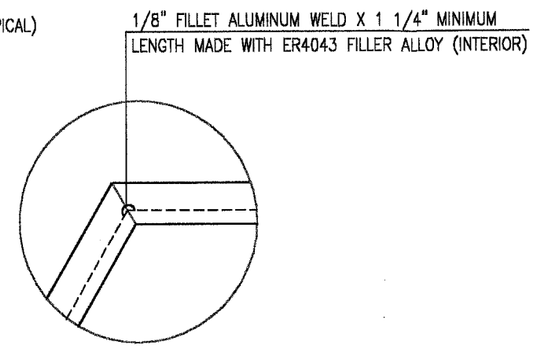

CORNER DETAIL #1

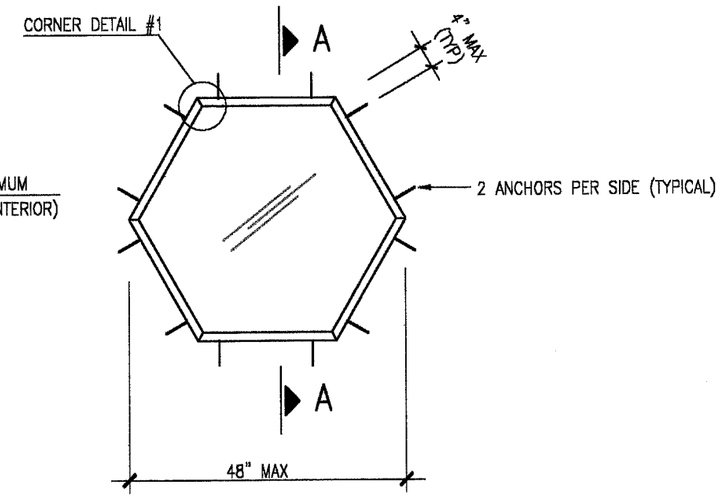

HEXAGON
TYPICAL ELEVATION

WINDOW SIZE INCHES	DESIGN PRESSURE CHART - PSF					
	3/16" TEMPERED GLASS		3/16" ANNEALED GLASS		DSB ANNEALED GLASS	
	POS.	NEG.	POS.	NEG.	POS.	NEG.
48	100.00	159.00	39.80	39.80	–	–
42	100.00	193.00	48.40	48.40	–	–
36	100.00	210.00	60.50	60.50	38.00	38.00
30	100.00	210.00	80.00	82.10	50.50	50.50
24	100.00	210.00	80.00	126.00	72.00	72.00

WINDOW SIZE INCHES	DESIGN PRESSURE CHART - PSF					
	3/16" TEMPERED GLASS		3/16" ANNEALED GLASS		DSB ANNEALED GLASS	
	POS.	NEG.	POS.	NEG.	POS.	NEG.
48	100.00	159.00	39.80	39.80	–	–
42	100.00	193.00	48.40	48.40	–	–
36	100.00	210.00	60.50	60.50	38.00	38.00
30	100.00	210.00	80.00	82.10	50.50	50.50
24	100.00	210.00	80.00	126.00	72.00	72.00

PRODUCT RENEWED
as complying with the Florida
Building Code
Acceptance No. 03-0529.07
Expiration Date SEPT. 16, 2008
By Miami Dade Product Control
Division

8-25-03
FRANCISCO HERNANDEZ
FLORIDA PE # 51393

Sunshine Windows
Manufacturing, Inc.
1745 W. 33rd Place
Hialeah, Florida 33012
Ph: (305)364-9952
Fax:(305)828-5118

FRANCISCO HERNANDEZ P. E.
Structural Engineering
15113 SW 35 Terr.
Miami, Florida 33185
Phone (305) 227-6901

SERIES 4230 ALUMINUM FIXED WINDOW

Drawn By: MH
Date: 8-24-00
Scale: 1/2"=1'
Revision: 8-25-03
Revision:

DRAWING NO.
PW-00-01

SHEET
3 OF 3