MIAMI-DADE

BUILDING CODE COMPLIANCE OFFICE (BCCO)
PRODUCT CONTROL DIVISION

MIAMI-DADE COUNTY, FLORIDA
METRO-DADE FLAGLER BUILDING
140 WEST FLAGLER STREET, SUITE 1603
MIAMI, FLORIDA 33130-1563
(305) 375-2901 FAX (305) 375-2908

NOTICE OF ACCEPTANCE (NOA)

PGT Industries
1070 Technology Drive
Nokomis, FL 34274

SCOPE:

This NOA is being issued under the applicable rules and regulations governing the use of construction materials. The documentation submitted has been reviewed by Miami-Dade County Product Control Division and accepted by the Board of Rules and Appeals (BORA) to be used in Miami Dade County and other areas where allowed by the Authority Having Jurisdiction (AHJ).

This NOA shall not be valid after the expiration date stated below. The Miami-Dade County Product Control Division (In Miami Dade County) and/or the AHJ (in areas other than Miami Dade County) reserve the right to have this product or material tested for quality assurance purposes. If this product or material fails to perform in the accepted manner, the manufacturer will incur the expense of such testing and the AHJ may immediately revoke, modify, or suspend the use of such product or material within their jurisdiction. BORA reserves the right to revoke this acceptance, if it is determined by Miami-Dade County Product Control Division that this product or material fails to meet the requirements of the applicable building code.

This product is approved as described herein, and has been designed to comply with the Florida Building Code, including the High Velocity Hurricane Zone.

DESCRIPTION: Series "HS 710" Aluminum Horizontal Sliding Window

APPROVAL DOCUMENT: Drawing No.**4112**, titled "Aluminum Horizontal Sliding Window", sheets 1 through 6 of 6, prepared by PGT Industries, dated 2/16/98, with revisions 12/29/03 signed sealed by Robert L. Clark, P.E., bearing the Miami-Dade County Product Control Revision stamp with the Notice of Acceptance number and expiration date by the Miami-Dade County Product Control Division.

MISSILE IMPACT RATING: Large and Small Missile Impact

LABELING: Each unit shall bear a permanent label with the manufacturer's name or logo, city, state and following statement: "Miami-Dade County Product Control Approved", unless otherwise noted herein.

RENEWAL of this NOA shall be considered after a renewal application has been filed and there has been no change in the applicable building code negatively affecting the performance of this product.

TERMINATION of this NOA will occur after the expiration date or if there has been a revision or change in the materials, use, and/or manufacture of the product or process. Misuse of this NOA as an endorsement of any product, for sales, advertising or any other purposes shall automatically terminate this NOA. Failure to comply with any section of this NOA shall be cause for termination and removal of NOA.

ADVERTISEMENT: The NOA number preceded by the words Miami-Dade County, Florida, and followed by the expiration date may be displayed in advertising literature. If any portion of the NOA is displayed, then it shall be done in its entirety.

INSPECTION: A copy of this entire NOA shall be provided to the user by the manufacturer or its distributors and shall be available for inspection at the job site at the request of the Building Official.

This NOA **revises NOA # 02-0305.02** and, consists of this page 1 and evidence page E-1 and E-2, as well as approval document mentioned above.
The submitted documentation was reviewed by **Theodore Berman, P.E.**

3/17/2004

PRODUCT CONTROL ACCEPTED

PGT Industries

NOTICE OF ACCEPTANCE: EVIDENCE SUBMITTED

A. DRAWINGS

1. Manufacturers die drawings and sections.
2. Drawing No. **4112,** titled "Aluminum Horizontal Sliding Window", sheets 1 through 6 of 6, prepared by PGT Industries, dated 2/16/98 with revisions dated 12/29/03 signed and sealed by Robert L. Clark, P.E.

B. TESTS

1. Test reports on 1) Air Infiltration Test, per FBC, TAS 202-94
   2) Uniform Static Air Pressure Test, Loading per FBC, TAS 202-94
   3) Water Resistance Test, per FBC, TAS 202-94
   4) Large Missile Impact Test per FBC, TAS 201-94
   5) Cyclic Wind Pressure Loading per FBC, TAS 203-94

   along with marked-up drawings and installation diagram of aluminum horizontal sliding window, prepared by Fenestration Testing Laboratory, Inc., Test Report No. **FTL-1969,** dated 3/17/98, signed and sealed by Joseph C. Chan, P.E.

2 Test reports on 1) Large Missile Impact Test per FBC, TAS 201-94
   2) Uniform Static Air Pressure Test, Loading per FBC, TAS 202-94
   3) Cyclic Wind Pressure Loading per FBC, TAS 203-94

   along with marked-up drawings and installation diagram of aluminum horizontal sliding window, prepared by Fenestration Testing Laboratory, Inc., Test Report No. **FTL-3740,** dated 03/18/03, signed and sealed by Joseph C. Chan, P.E.

C. CALCULATIONS

1. Anchor Calculations, ASTM-E1300, and structural analysis, prepared by PGT Industries, dated 1/8/04, signed and sealed by Robert L. Clark, P.E.

D. QUALITY ASSURANCE

1. Miami Dade Building Code Compliance Office (BCCO).

E. MATERIAL CERTIFICATIONS

1. Notice of Acceptance No. 01-1204.01 issued to "E.I. DuPont DeNemours" for "Dupont Butacite R PVB" dated 02/15/01, expiring on 12/11/05.
2. Notice of Acceptance No. 01-0205.02 issued to "Solutia Inc." for "Saflex/Keepsafe Maximum" dated 05/17/01, expiring on 05/21/06.

Theodore Berman, P.E.
Deputy Director, Product Control Division
NOA No 03-0612.06
Expiration Date: May 20, 2007
Approval Date: April 08, 2004

NOTICE OF ACCEPTANCE: EVIDENCE SUBMITTED

F. STATEMENTS

1. Statement letter of conformance, dated January 25, 1999, signed by Robert L. Clark, P.E.
   "Submitted under NOA# 99-0204-03"
2. Statement letter of no financial interest, dated January 25, 1999, signed by Robert L. Clark, P.E.
   "Submitted under NOA# 99-0204-03"

G. OTHER

1. Letter from the consultant stating that the product is in compliance with the Florida Building Code (FBC).

Theodore Berman, P.E.
Deputy Director, Product Control Division
NOA No 03-0612.06
Expiration Date: May 20, 2007
Approval Date: April 08, 2004

NOTES: LARGE MISSILE IMPACT WINDOWS

1. GLAZING OPTIONS:
   A. 5/16" (.350) LAMINATED CONSISTING OF AN .090 PVB INNER LAYER OF DUPONT BUTACITE OR SAFLEX/KEEPSAFE MAXIMUM BETWEEN (2) LITES OF 1/8" ANNEALED GLASS.
   B. 5/16" (.350) LAMINATED CONSISTING OF AN .090 PVB INNER LAYER OF DUPONT BUTACITE OR SAFLEX/KEEPSAFE MAXIMUM BETWEEN (2) LITES OF 1/8" HEAT STRENGTHENED GLASS.
   G
   C. 13/16" LAMI I.G. GLASS CONSISTING OF: 1/8" HEAT STRENGTHENED GLASS, 3/8" AIR SPACE AND 5/16" LAMINATED GLASS. THE 5/16" LAMINATED COMPONENT CONSISTS OF AN .090 PVB LAYER OF DUPONT OR SAFLEX/KEEPSAFE MAXIMUM BETWEEN (1) LITE OF 1/8" ANNEALED GLASS AND (1) LITE OF HEAT STRENGTHENED GLASS.
   D. 13/16" LAMI I.G. GLASS CONSISTING OF: 1/8" HEAT STRENGTHENED GLASS, 3/8" AIR SPACE AND 5/16" LAMINATED GLASS. THE 5/16" LAMINATED COMPONENT CONSISTS OF AN .090 PVB LAYER OF DUPONT OR SAFLEX/KEEPSAFE MAXIMUM BETWEEN (2) LITES OF 1/8" HEAT STRENGTHENED GLASS.
2. CONFIGURATIONS: XO or OX
3. DESIGN PRESSURE RATING: SEE TABLES 1–3 ON SHEET 2

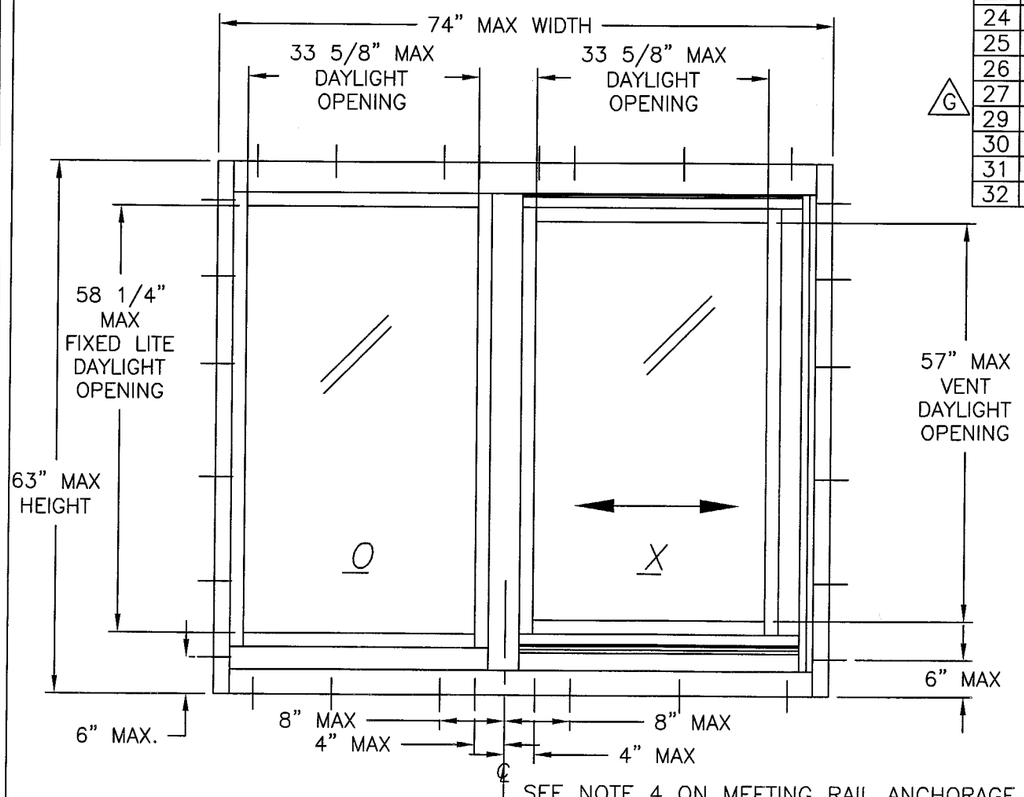

ELEVATION

ITEM	DESCRIPTION	V.T. #	QTY./LOCATION	VENDOR	VENDOR #
1	FLANGE FRAME JAMB (Alum. 6063–T5)	612225	2	ALUMAX	AF–12225
2	FIXED MEETING RAIL (Alum. 6063HS–T54)	4054A	1	INDALEX	64054A
3	SASH MEETING RAIL (Alum. 6063HS–T54)	4006C	1	INDALEX	64006C
4	SASH SIDE RAIL (Alum. 6063–T5)	612230	1	ALUMAX	AF–12230
5	GLAZING BEAD (Alum. 6063–T5)	6534571	8	ALUMAX	AF–534571
6	WINDLOAD ADAPTER (5 7/8" RIGID PVC)	1207	1 (@ midspan of frame sill)		6WCLIP
7	FLANGE FRAME HEAD (Alum. 6063–T5)	612237	1	ALUMAX	AF–12237
8	FLANGE FRAME SILL (Alum. 6063–T5)	612238	1	ALUMAX	AF–12238
9	FRAME SILL ADAPTER (Alum. 6063–T5)	612239	1	ALUMAX	AF–12239
10	SASH TOP/BOT. RAIL (Alum. 6063–T5)	612240	2	ALUMAX	AF–12240
11	SCREEN RETAINER (Alum. 6063–T5)	6532377	1	ALUMAX	AF–532377
12	5/16" (.350) LAMINATED USING (2) LITES OF 1/8" ANNEALED GLASS				
13	5/16" (.350) LAMINATED USING (2) LITES 1/8" HEAT STRENGTHENED GLASS				
14	ANTI–LIFT CHANNEL (Alum. 6063–T5)	612244	1 (@ midspan of vent)	ALUMAX	AF–12244
15	#10 x 1.000 Ph. Fl. SMS	710X1	4 (Windload Adapter screws)	FASTEC	
16	#6 x 1.000 PH. PAN SMS	76X1PPA	2 (for anti–lift channel)	MERCHANTS FASTENER	
17	WEATHERSTRIP, THIN WALL BULB VINYL	6TP247	8 (1 per Glazing Bead)	TEAM PLASTICS	TP–247
18	#8 x .500 PHIL. Fl SMS	7856A	2 (Sweep Latch screws) 4 (when using 2 Sweep Latches)	MERCHANTS FASTENER	
19	#8 x 1.000 PHIL. P.H. SMS	781PQA	22 (Frame/Vent assy. screws)	MERCHANTS FASTENER	
20	SWEEP LATCH	71096	1 (11.5" from ends–vent mtg. rail) 2 (if height is >= 42")	MINIATURE DIE CASTING	PGT.214.XX
21	WEEP HOUSING	70250	3 (1 @midspan/2 1/4" from ends)	MASTER TOOL	7–M10–250
22	WEEP FLAP	70251	3 (1 @midspan/2 1/4" from ends)	MASTER TOOL	7–M10–251
23	ROLLER HOUSING		2 (@ ea. end of vent top rail)	MASTER TOOL	70312
24	BRASS WHEELS	7BRWHL2	4 (2 per Roller Housing)	VINYL–TECH/P.G.T.	
25	WSTP, .270 x .170 BACK, FIN SEAL	61062W	2 (@vent top/bot rails & mtg. rail)	SCHLEGEL OR EQUIV.	FS7826–187
26	SILICON	62899		DOW CORNING	899 OR 995
27	WEATHERSTRIP, BULB VINYL	6TP249	1 (@ vent jamb rail)	TEAM PLASTICS	TP–249
29	13/16" I.G., 1/8" HEAT STRENGTHENED GLASS, 3/8" SPACE, 5/16" LAMI (1/8" A, .090, 1/8" HS)				
30	GLAZING BEAD (13/16" I.G.) 6063–T5	4067	8	INDALEX	64067
31	WSTP, .187 x .250 BACK, FIN SEAL	1060	1 @ MEETING RAIL	SCHLEGEL OR EQUIV.	61060G
32	13/16" I.G., 1/8" HEAT STRENGTHENED GLASS, 3/8" SPACE, 5/16" LAMI (1/8" HS, .090, 1/8" HS)				

G

4. ANCHORAGE: SINGLE ROW OF FASTENERS LOCATED AS FOLLOWS & PER SHT 5.
   HEAD & SILL:
   MAX. 6" FROM CORNERS.
   MAX. 4" & 8" ON EACH SIDE OF MEETING RAIL CENTERLINE.
   MAX. 15" SPACING.
   JAMBS:
   MAX. 6" FROM CORNERS.
   MAX. 12 1/2" SPACING.
5. SHUTTER REQUIREMENT: NO SHUTTERS REQ'D.
6. REF. TEST REPORTS: FTL–1969 & FTL–3740

PRODUCT REVISED as complying with the Florida Building Code
Acceptance No. 03-0612.06
Expiration Date 05/20/07
By [signature]
Miami-Dade Product Control Division

Revsd By:	Date:	Revisions:
F.K.	12/29/03	G–REMOVE ITEM 29 GLASS
F.K.	7/23/03	F–ADD #995 TO ITEM 26
F.K.	4/4/03	E– 2,3,6 ADD 129–132
F.K.	9/6/02	D–REVISED NOTE 1
Drawn By: D.B.	Date: 2/16/98	

Robert L. Clark, P.E.
PE #39712
Structural

PGT INDUSTRIES

1070 TECHNOLOGY DRIVE
NOKOMIS, FL 34275

P.O. BOX 1529
NOKOMIS, FL 34274

Description: OX ELEVATION & B.O.M. (LG. MISSILE)

Title: ALUMINUM HORIZONTAL SLIDING WINDOW

Series/Model:	Scale:	Sheet:	Drawing No.	Rev:
HS–710	NTS	1 of 6	4112	G

COMPARATIVE ANALYSIS TABLE 1. GLASS TYPES A & C FTL-1969 & FTL-3740

A. 5/16" LAMINATED (1/8" ANNEALED, .090 PVB, 1/8" ANNEALED)

C. 13/16" LAMI I.G. - 1/8"HEAT STRENGTHENED, 3/8" SPACE, 5/16 LAMI (1/8"HEAT STRENGHTENED, .090 PVB, 1/8"ANNEALED)

G

WINDOW WIDTHS	WINDOW HEIGHTS																	
	26.000		38.375		44.000		50.625		59.000		60.000		61.000		62.000		63.000	
26.500	66.7	-75.0	66.7	-75.0	66.7	-75.0	66.7	-75.0	66.7	-75.0	66.7	-75.0	66.7	-75.0	66.7	-75.0	66.7	-75.0
37.000	66.7	-75.0	66.7	-75.0	66.7	-75.0	66.7	-75.0	66.7	-75.0	66.7	-75.0	66.7	-75.0	66.7	-75.0	66.7	-75.0
44.000	66.7	-75.0	66.7	-75.0	66.7	-75.0	66.7	-75.0	66.7	-75.0	66.7	-75.0	66.7	-75.0	66.7	-74.0	66.7	-74.0
53.125	66.7	-75.0	66.7	-75.0	66.7	-73.1	61.6	-61.6	56.0	-56.0	55.0	-55.0	54.2	-54.2	53.4	-53.4	52.7	-52.7
60.000	66.7	-75.0	66.7	-73.5	62.0	-62.0	54.8	-54.8	46.0	-46.0	45.1	-45.1	44.3	-44.3	43.7	-43.7	43.2	-43.2
63.000	66.7	-75.0	66.7	-69.4	58.9	-58.9	51.7	-51.7	43.0	-43.0	42.2	-42.2	41.3	-41.3	40.5	-40.5	40.0	-40.0
66.000	66.7	-75.0	65.5	-65.5	56.6	-56.6	49.0	-49.0	41.2	-41.2	40.4	-40.4	39.5	-39.5	38.7	-38.7	37.9	-37.9
70.000	66.7	-75.0	60.8	-60.8	53.7	-53.7	46.3	-46.3	39.1	-39.1	38.3	-38.3	37.4	-37.4	36.8	-36.8	36.1	-36.1
74.000	66.7	-75.0	58.2	-58.2	51.3	-51.3	44.2	-44.2	37.4	-37.4	36.8	-36.8	36.1	-36.1	35.5	-35.5	34.8	-34.8

COMPARATIVE ANALYSIS TABLE 2. GLASS TYPES B & D FTL-1969 & FTL-3740

B. 5/16" LAMINATED (1/8" HEAT STRENGTHENED, .090 PVB, 1/8" HEAT STRENGTHENED)

D. 13/16" LAMI I.G. - 1/8"HEAT STRENGTHENED, 3/8" SPACE, 5/16 LAMI (1/8"HEAT STRENGTHENED, .090 PVB, 1/8"HEAT STRENGTHENED)

G

WINDOW WIDTHS	WINDOW HEIGHTS																	
	26.000		38.375		44.000		50.625		59.000		60.000		61.000		62.000		63.000	
26.500	66.7	-75.0	66.7	-75.0	66.7	-75.0	66.7	-75.0	66.7	-75.0	66.7	-75.0	66.7	-75.0	66.7	-75.0	66.7	-75.0
37.000	66.7	-75.0	66.7	-75.0	66.7	-75.0	66.7	-75.0	66.7	-75.0	66.7	-75.0	66.7	-75.0	66.7	-75.0	66.7	-75.0
44.000	66.7	-75.0	66.7	-75.0	66.7	-75.0	66.7	-75.0	66.7	-75.0	66.7	-75.0	66.7	-75.0	66.7	-75.0	66.7	-75.0
53.125	66.7	-75.0	66.7	-75.0	66.7	-75.0	66.7	-75.0	66.7	-75.0	66.7	-75.0	66.7	-75.0	66.7	-75.0	66.7	-75.0
60.000	66.7	-75.0	66.7	-75.0	66.7	-75.0	66.7	-75.0	66.7	-75.0	66.7	-75.0	66.7	-75.0	66.7	-75.0	66.7	-75.0
63.000	66.7	-75.0	66.7	-75.0	66.7	-75.0	66.7	-75.0	66.7	-75.0	66.7	-75.0	66.7	-75.0	66.7	-75.0	66.7	-75.0
66.000	66.7	-75.0	66.7	-75.0	66.7	-75.0	66.7	-75.0	66.7	-75.0	66.7	-75.0	66.7	-75.0	66.7	-75.0	66.7	-75.0
70.000	66.7	-75.0	66.7	-75.0	66.7	-75.0	66.7	-75.0	66.7	-75.0	66.7	-75.0	66.7	-74.9	66.7	-73.5	66.7	-72.3
74.000	66.7	-75.0	66.7	-75.0	66.7	-75.0	66.7	-75.0	66.7	-74.8	66.7	-73.5	66.7	-72.2	66.7	-70.9	66.7	-69.6

PRODUCT REVISED
as complying with the Florida Building Code
Acceptance No. 03-0612.06
Expiration Date 05/20/07
By: [signature]
Miami Dade Product Control Division

NOTES:

A. NEGATIVE DESIGN LOADS BASED ON TESTED PRESSURE AND GLASS TABLES ASTM E 1300-98 (AND ASTM E 1300-94 OUTSIDE MIAMI-DADE COUNTY).

B. POSITIVE DESIGN LOADS BASED ON WATER TEST PRESSURE AND GLASS TABLES ASTM E 1300-98 (AND ASTM E 1300-94 OUTSIDE MIAMI-DADE COUNTY).

C. DESIGN PRESSURES UNDER 40 P.S.F. NOT APPLICABLE IN MIAMI-DADE COUNTY.

1/14/04

Robert L. Clark, P.E.
PE #39712
Structural

PGT INDUSTRIES

1070 TECHNOLOGY DRIVE
NOKOMIS, FL 34275

P.O. BOX 1529
NOKOMIS, FL 34274

Revsd By:	Date:	Revisions:
F.K.	12/29/03	F-UPDATE TABLES
F.K.	7/23/03	F-CORRECT TABLE 3 "C&E"
F.K.	4/4/03	E-ADD 13/16" I.G./NOTES
F.K.	9/6/02	D-REVISED TABLES
Drawn By: D.B.	Date: 2/16/98	

Description: GLASS TYPE COMPARATIVE ANALYSIS

Title: ALUMINUM HORIZONTAL SLIDING WINDOW

Series/Model:	Scale:	Sheet:	Drawing No.	Rev:
HS-710	NTS	2 of 6	4112	G

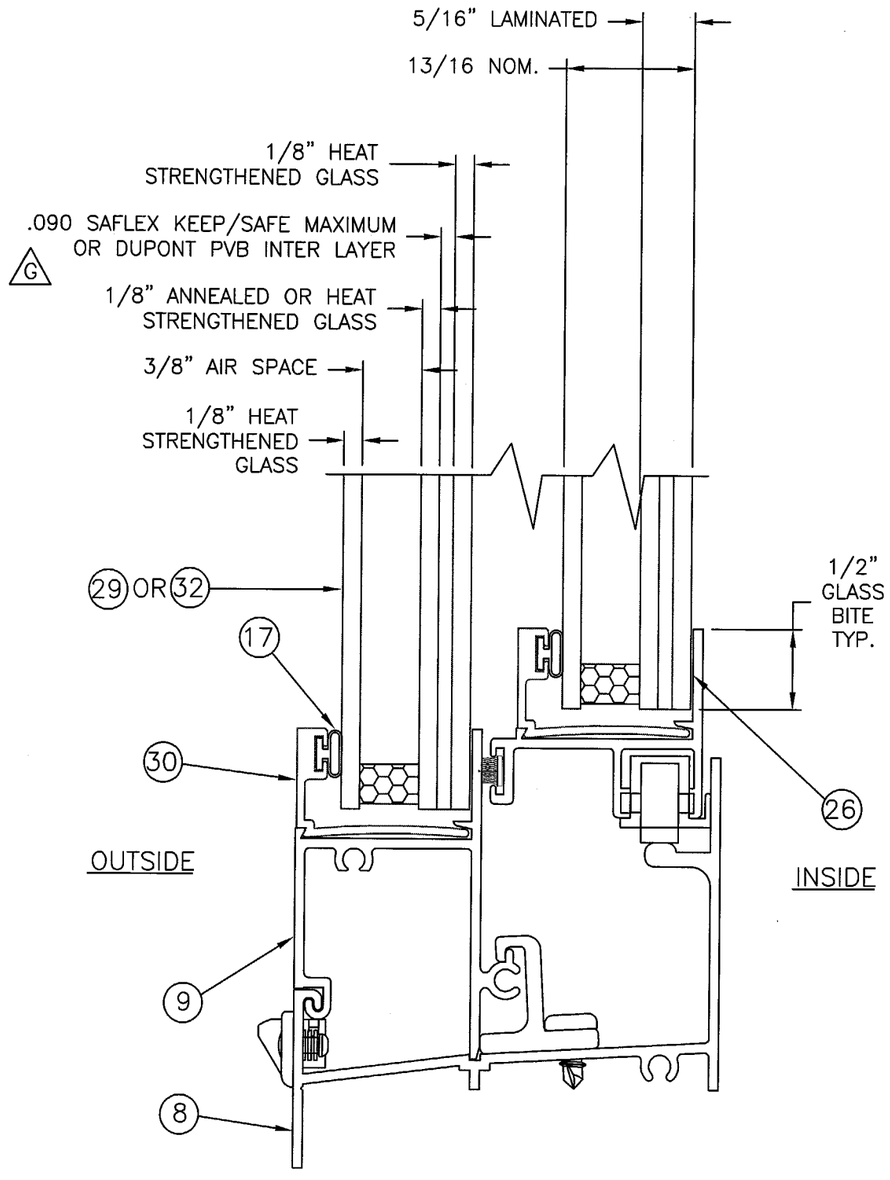

GLAZING DETAILS: 13/16" (.825) I.G.

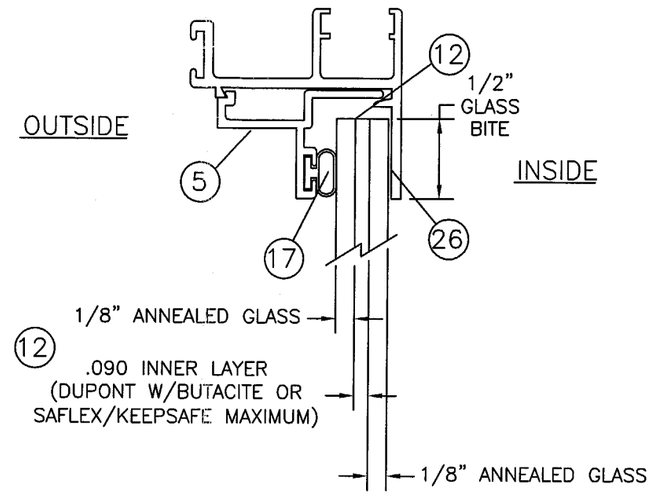

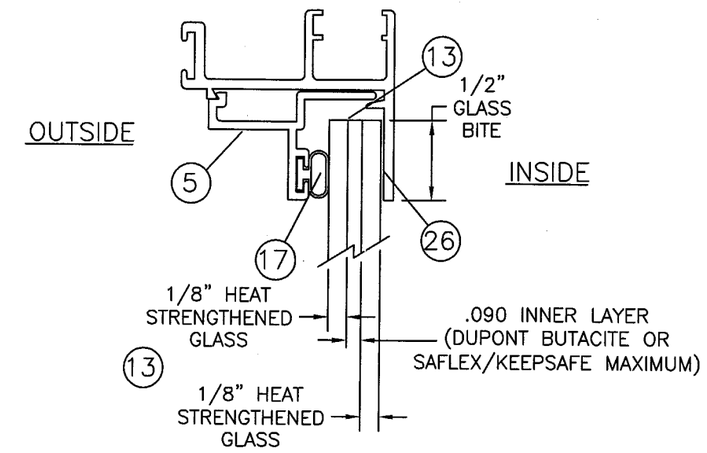

GLAZING DETAILS: 5/16" (.350) LAMINATED GLASS

PRODUCT REVISED
as complying with the Florida Building Code
Acceptance No 03-0612.06
Expiration Date 05/20/07
By [signature]
Miami Dade Product Control Division

REFERENCE TEST REPORTS: FTL-1969 & FTL-3740

1/14/04

Robert L. Clark, P.E.
PE #39712
Structural

PGT INDUSTRIES

1070 TECHNOLOGY DRIVE
NOKOMIS, FL 34275

P.O. BOX 1529
NOKOMIS, FL 34274

Revsd By:	Date:	Revisions:
F.K.	12/29/03	G-REMOVE ITEM 28 GLASS TYPE
F.K.	7/23/03	F-ITEM 17 SCALE
F.K.	4/4/03	E-ADD 13/16" I.G.
F.K.	9/6/02	D-ADD GLASS TYPE
Drawn By: D.B.	2/16/98	

Description: SECTIONS & GLAZING DETAILS

Title: ALUMINUM HORIZONTAL SLIDING WINDOW

Series/Model:	Scale:	Sheet:	Drawing No.	Rev:
HS-710	NTS	3 of 6	4112	G

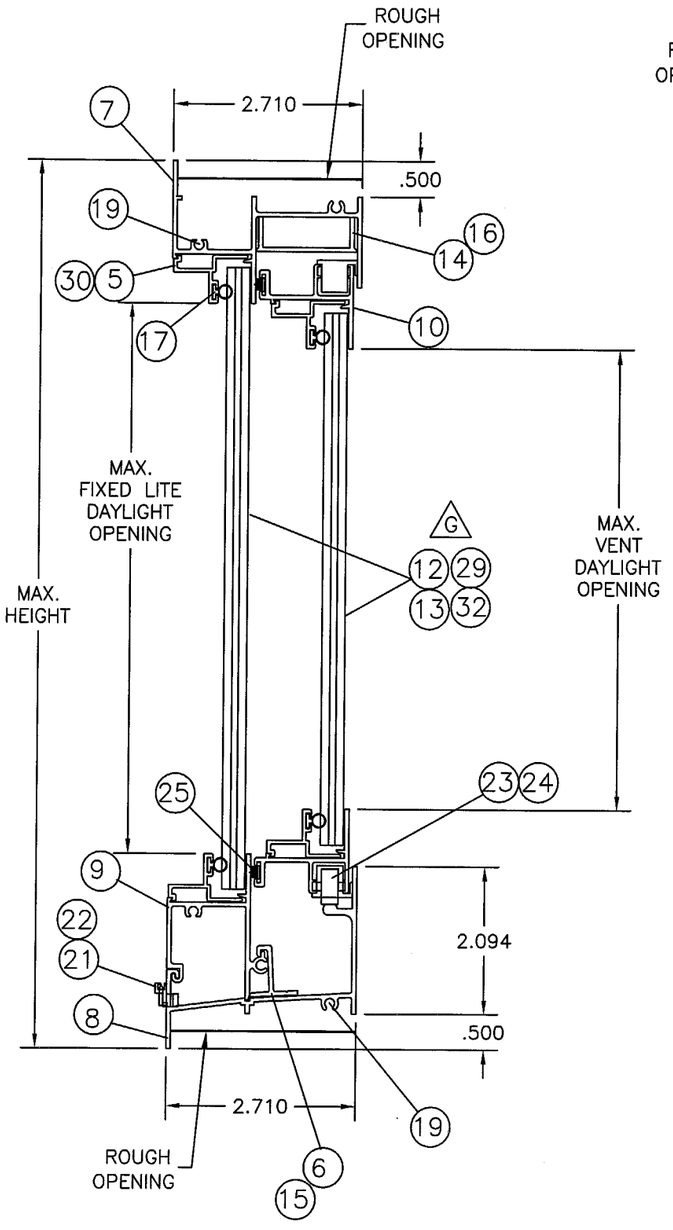

VERTICAL SECTION

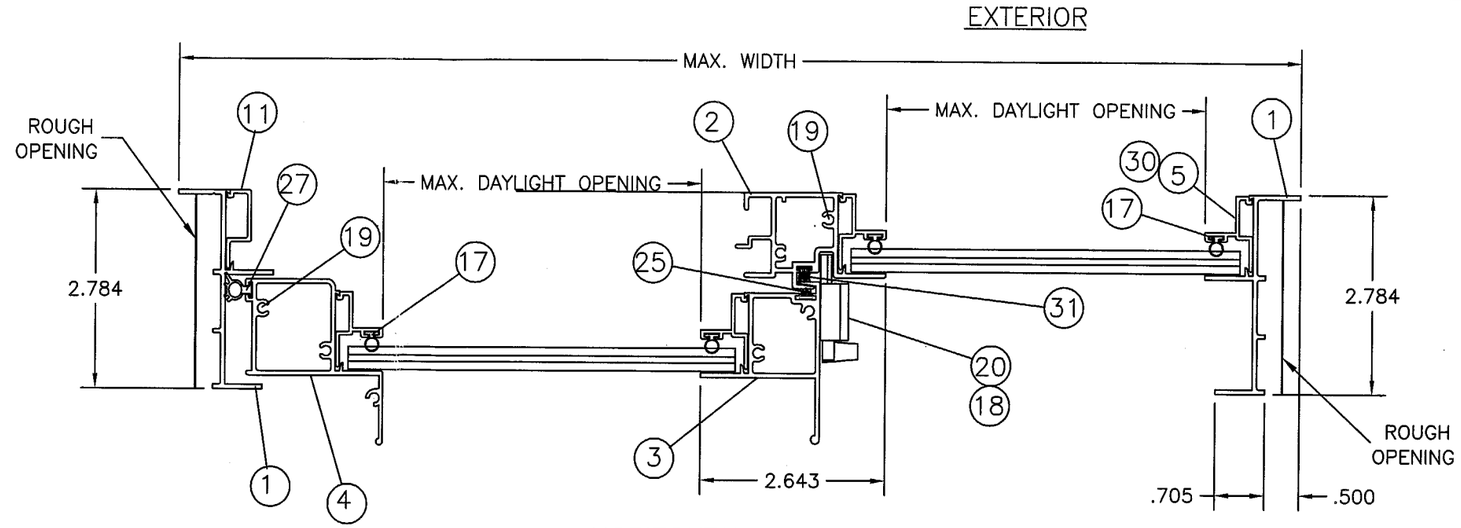

HORIZONTAL SECTION

PRODUCT REVISED
as complying with the Florida Building Code
Acceptance No. 03-0612.06
Expiration Date 05/20/07
By Glenda Benn
Miami Dade Product Control Division

Revsd By:	Date:	Revisions:
F.K.	12/29/03	G-REMOVE ITEM 28 GLASS TYPE
F.K.	7/23/03	F-NO CHG THIS SHT
F.K.	4/4/03	E-ADD 129-132
F.K.	9/6/02	D-ADD GLASS TYPE
Drawn By: D.B.	2/16/98	

1/16/04
Robert L. Clark, P.E.
PE #39712
Structural

PGT INDUSTRIES

1070 TECHNOLOGY DRIVE
NOKOMIS, FL 34275

P.O. BOX 1529
NOKOMIS, FL 34274

Description: SECTIONS & GLAZING DETAILS

Title: ALUMINUM HORIZONTAL SLIDING WINDOW

Series/Model:	Scale:	Sheet:	Drawing No.	Rev:
HS-710	NTS	4 of 6	4112	G

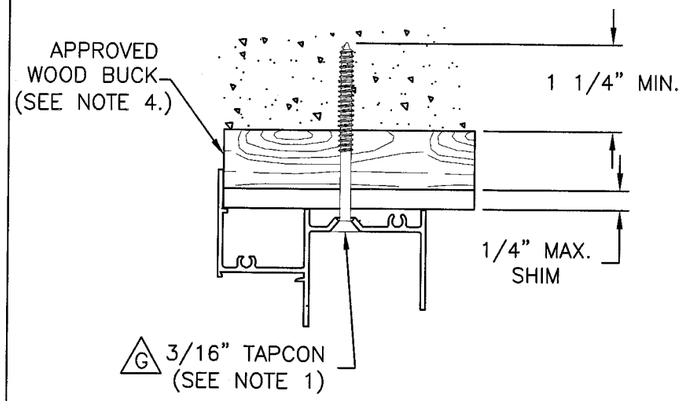

TYPICAL HEAD SECTION
SUBSTRATE ANCHORING

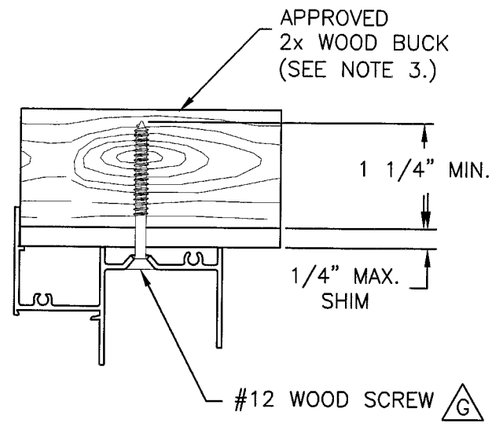

TYPICAL HEAD SECTION
WOOD ANCHORING

NOTES:

1. USE ONLY MIAMI–DADE COUNTY APPROVED ELCO TAPCONS. G
2. REFERENCE TEST REPORT: FTL–1969 & FTL–3740
3. INSTALLATION OF 2x WOOD BUCK TO THE SUBSTRATE ENGINEERED SEPARATELY AND TO BE REVIEWED BY BUILDING OFFICIAL.
4. INSTALLATION OF 1x WOOD BUCK TO THE SUBSTRATE TO BE ENGINEERED SEPARATELY.

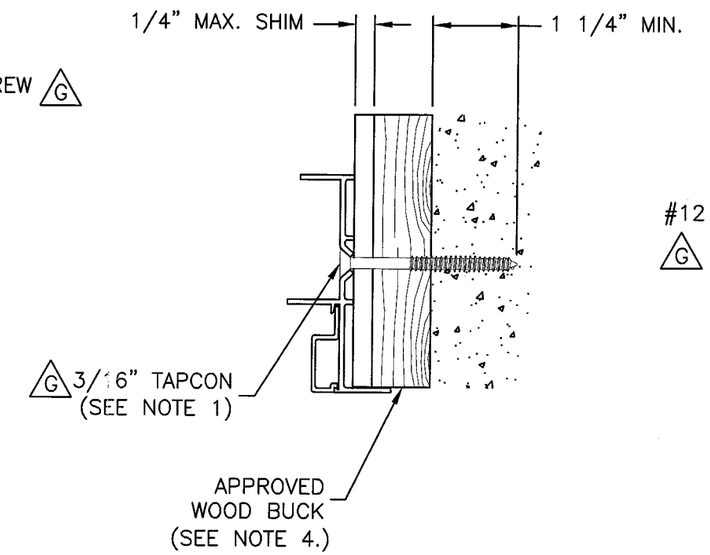

TYPICAL JAMB SECTION
SUBSTRATE ANCHORING

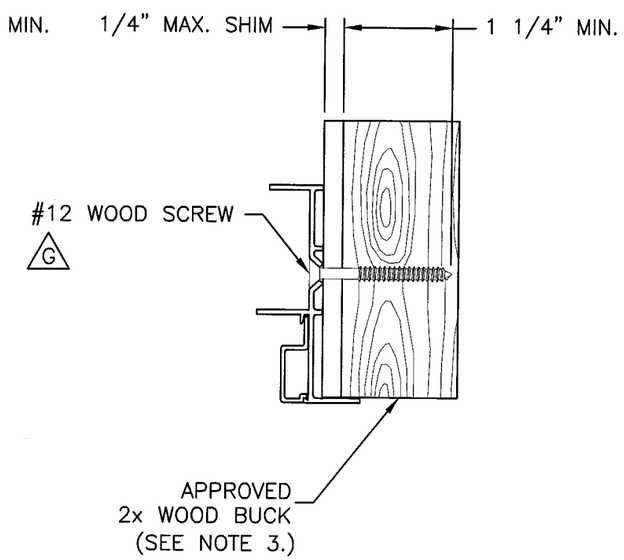

TYPICAL JAMB SECTION
WOOD ANCHORING

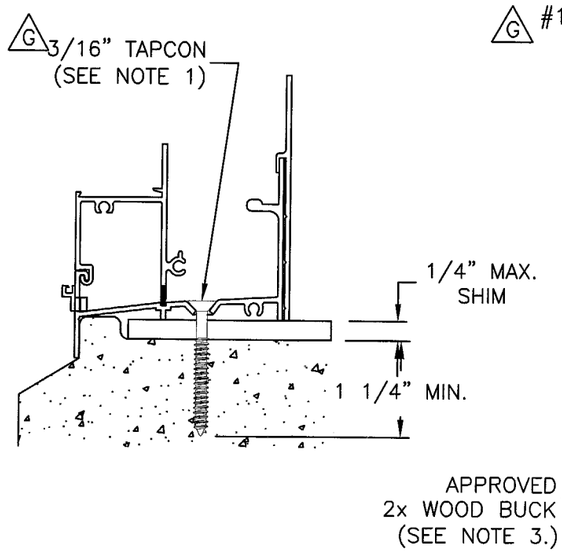

TYPICAL SILL SECTION
SUBSTRATE ANCHORING

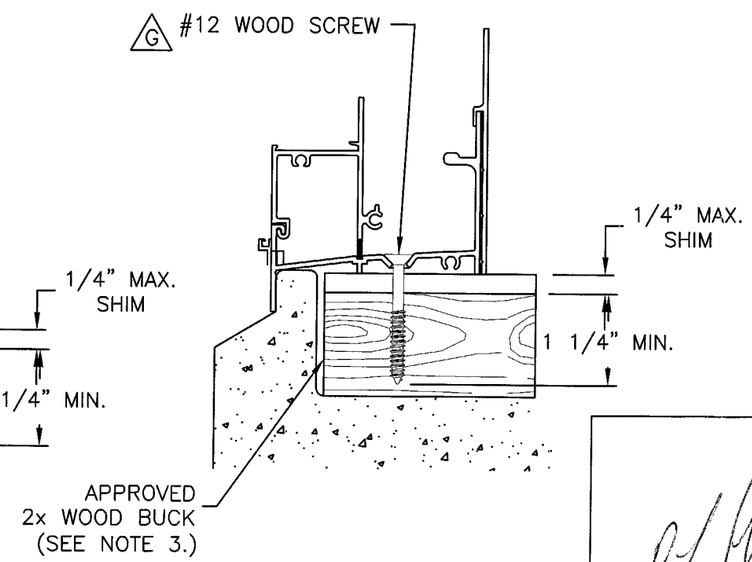

TYPICAL SILL SECTION
WOOD ANCHORING

PRODUCT REVISED
as complying with the Florida Building Code
Acceptance No 03-0612.06
Expiration Date 05/20/07
By Cleesie Leon
Miami-Dade Product Control Division

1/14/04

Robert L. Clark, P.E.
PE #39712
Structural

PGT INDUSTRIES

1070 TECHNOLOGY DRIVE
NOKOMIS, FL 34275

P.O. BOX 1529
NOKOMIS, FL 34274

Revsd By:	Date:	Revisions:
F.K.	12/29/03	G-CHG 3/16" TAPCON & #12 SCR
F.K.	7/23/03	F-REMOVE 3/16 TAPCONS
F.K.	4/4/03	E-NO CHG THIS SHT
F.K.	9/6/02	D-ADD NOTES 3 & 4
Drawn By: D.B.	Date: 2/16/98	

Description: ANCHORAGE

Title: ALUMINUM HORIZONTAL SLIDING WINDOW

Series/Model:	Scale:	Sheet:	Drawing No.	Rev:
HS–710	NTS	5 of 6	4112	G

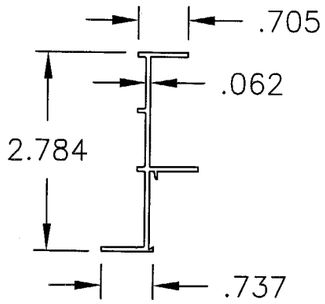

1 FLANGE FRAME JAMB
6063–T5 ALUM.

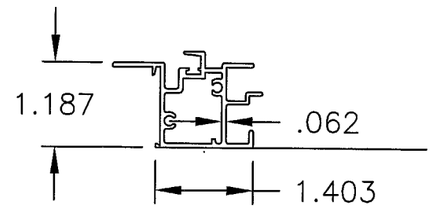

2 FIXED MEETING RAIL
6063HS–T54 ALUM.

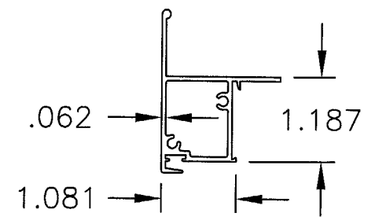

3 SASH MEETING RAIL
6063HS–T54 ALUM.

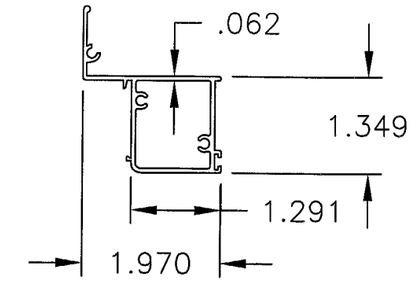

4 SASH SIDE RAIL
6063–T5 ALUM.

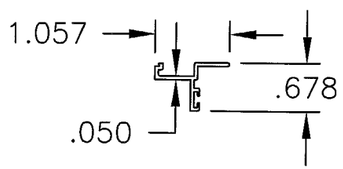

5 5/16" GLAZING BEAD
6063–T5 ALUM.

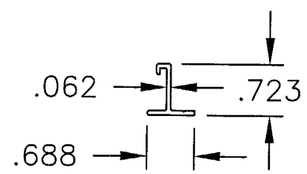

6 WIND LOAD ADAPTER
6063–T5 ALUM.

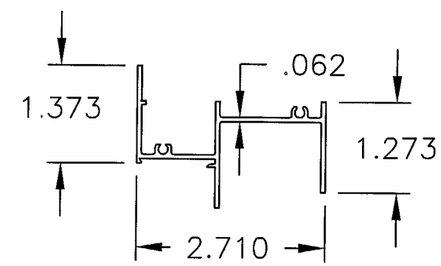

7 FLANGE FRAME HEAD
6063–T5 ALUM.

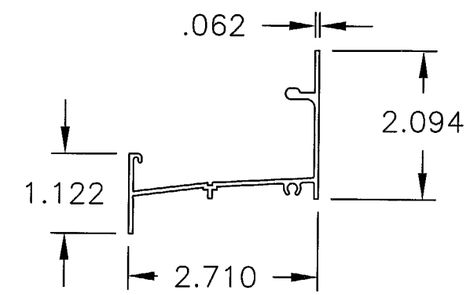

8 FLANGE FRAME SILL
6063–T5 ALUM.

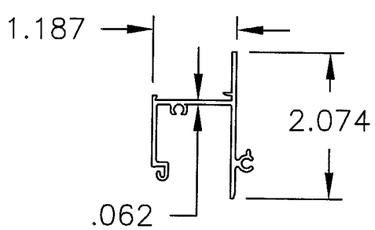

9 FRAME SILL ADAPTER
6063–T5 ALUM.

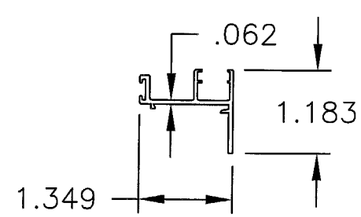

10 SASH TOP & BOTTOM RAIL
6063–T5 ALUM.

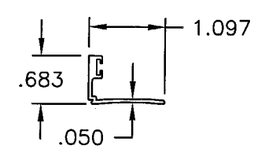

30 13/16" GLAZING BEAD
6063–T5 ALUM.

PRODUCT REVISED
as complying with the Florida
Building Code
Acceptance No. 03-0612.06
Expiration Date 05/20/07
By [signature]
Miami Dade Product Control
Division

REFERENCE TEST REPORTS: FTL–1969 & FTL–3740

1/16/04
Robert L. Clark, P.E.
PE #39712
Structural

PGT INDUSTRIES

1070 TECHNOLOGY DRIVE
NOKOMIS, FL 34275

P.O. BOX 1529
NOKOMIS, FL 34274

Revsd By:	Date:	Revisions:
F.K.	12/29/03	F–NO CHG THIS SHT
F.K.	7/23/03	F–NO CHG THIS SHT
F.K.	4/4/03	E–ADD 13/16" BEAD
F.K.	9/6/02	D–NO CHG THIS SHT
Drawn By: F.K.	Date: 11/2/01	

Description: EXTRUSION PROFILES

Title: ALUMINUM HORIZONTAL SLIDING WINDOW

Series/Model:	Scale:	Sheet:	Drawing No.	Rev:
HS–710	NTS	6 of 6	4112	G