MIAMI-DADE

BUILDING CODE COMPLIANCE OFFICE (BCCO)
PRODUCT CONTROL DIVISION

MIAMI-DADE COUNTY, FLORIDA
METRO-DADE FLAGLER BUILDING
140 WEST FLAGLER STREET, SUITE 1603
MIAMI, FLORIDA 33130-1563
(305) 375-2901 FAX (305) 375-2908

NOTICE OF ACCEPTANCE (NOA)

Illinois Tool Works Inc. / Div. of Buildex
1349 West Bryn Mawr Avenue
Itasca, Illinois 60143

SCOPE:

This NOA is being issued under the applicable rules and regulations governing the use of construction materials. The documentation submitted has been reviewed by Miami-Dade County Product Control Division and accepted by the Board of Rules and Appeals (BORA) to be used in Miami Dade County and other areas where allowed by the Authority Having Jurisdiction (AHJ).

This NOA shall not be valid after the expiration date stated below. The Miami-Dade County Product Control Division (In Miami Dade County) and/or the AHJ (in areas other than Miami Dade County) reserve the right to have this product or material tested for quality assurance purposes. If this product or material fails to perform in the accepted manner, the manufacturer will incur the expense of such testing and the AHJ may immediately revoke, modify, or suspend the use of such product or material within their jurisdiction. BORA reserves the right to revoke this acceptance, if it is determined by Miami-Dade County Product Control Division that this product or material fails to meet the requirements of the applicable building code.

This product is approved as described herein, and has been designed to comply with the High Velocity Hurricane Zone of the Florida Building Code.

DESCRIPTION: ITW BUILDEX LITE WEIGHT CONCRETE FASTENING SYSTEM

LABELING: Each unit shall bear a permanent label with the manufacturer's name or logo, city, state and following statement: "Miami-Dade County Product Control Approved", unless otherwise noted herein.

RENEWAL of this NOA shall be considered after a renewal application has been filed and there has been no change in the applicable building code negatively affecting the performance of this product.

TERMINATION of this NOA will occur after the expiration date or if there has been a revision or change in the materials, use, and/or manufacture of the product or process. Misuse of this NOA as an endorsement of any product, for sales, advertising or any other purposes shall automatically terminate this NOA. Failure to comply with any section of this NOA shall be cause for termination and removal of NOA.

ADVERTISEMENT: The NOA number preceded by the words Miami-Dade County, Florida, and followed by the expiration date may be displayed in advertising literature. If any portion of the NOA is displayed, then it shall be done in its entirety.

INSPECTION: A copy of this entire NOA shall be provided to the user by the manufacturer or its distributors and shall be available for inspection at the job site at the request of the Building Official.

This NOA renews NOA # 00-0628.01 and consists of pages 1 through 6.
The submitted documentation was reviewed by Frank Zuloaga, RRC

PRODUCT CONTROL ACCEPTED

ROOFING COMPONENT APPROVAL

Category: Roofing
Sub-Category: Roofing Fasteners

Materials: Steel
Maximum Design Pressure N/A.
Fire Classification: N/A

SCOPE:

This approves ITW Buildex **"LITE WEIGHT CONCRETE FASTENING SYSTEM"** for use with any approved roof assemblies listing ITW Buildex **"LITE WEIGHT CONCRETE FASTENING SYSTEM"** as an approved fastening system.

APPROVED APPLICATIONS:

Decks: Aggregate or Cellular lightweight insulating concrete (with current NOA).

Application: See specific Roof Assembly Product Control Approval Notice of Acceptance for fastener density and attachment patterns.

Base Sheet: See specific Roof Assembly Product Control Approval Notice of Acceptance

TRADE NAMES OF PRODUCTS MANUFACTURED OR LABELED BY APPLICANT:

Product Name	Dimensions	Test Specification	Product Description
Lite Weight Concrete Fastener	1.09" x 1.13" head x 1.76" length fitted with 3" diameter plate.	PA 114 (E) PA 117 (A) PA 117 (B)	G-90 galvanized fastener for base sheet attachment to lightweight insulating concrete decks not less than 2" thick. Coated with gray corrosion resistant coating.

TYPICAL PHYSICAL PROPERTIES:

Withdrawal Resistance Performance (PA 117(A) - Static Load)		
Fastener	**Deck Type[1]**	**Withdrawal Resistance Value Under Static Load Fully Cured (≥ 28 days)**
Buildex Lite Weight Concrete Fastener	Aggregate Lightweight *(min. 125 psi)*	82 lbf
	Cellular Lightweight *(min. 200 psi)*	125 lbf
	Cellular Lightweight *(min. 300 psi)*	101 lbf
Withdrawal Resistance Performance (PA 117(A) - Pulsating Load)		
Buildex Lite Weight Concrete Fastener	Cellular Lightweight *(min. 300 psi)*	39 lbf
Minimum compressive strength values noted herein correspond to that of the specimens utilized during withdrawal resistance testing.		

Dynamic Pull Through Performance (3" Diameter Plate)		
Base Sheet Manufacturer	**Base Sheet**	**Dynamic Pull Through Value (lbf)[1]**
Honeywell	Black Armor Glass Fiber Base	152
Honeywell	Black Armor Vented Base	171
Honeywell	Black Armor Glass Fiber Felt	164
Honeywell	Black Armor Premium Glass Fiber	157
CertainTeed Corporation	Channel Vent GB	176
CertainTeed Corporation	Hydrostop	202
CertainTeed Corporation	Vaporbar GB	175
CertainTeed Corporation	Vaporbar	193
GAF Materials Corporation	GAFGlas #75	162
GAF Materials Corporation	GAFGlas #75M	178
GAF Materials Corporation	GAFGlas Ply 4	152
GAF Materials Corporation	Ruberoid 20	202
GS Roofing Products Company, Inc.	Flex-I-Base	169
GS Roofing Products Company, Inc.	Glasbase Base Sheet	136
Johns Manville	Glasbase	168
Johns Manville	Dynabase	194
Johns Manville	Ventsulation	152
Johns Manville	Perma Ply R	206
Johns Manville	Glasbase Plus	196
Johns Manville	Glasply Premier	242
Johns Manville	Perma Ply 28	182
Siplast	Parabase	143
Siplast	Parabase Plus	135
Tamko Roofing Products, Inc.	Vapor Chan	175
Tamko Roofing Products, Inc.	Glas-Base	187
Tremco	BURmastic Glass Ply	139
Tremco	BURmastic Composite Ply	250
U.S. Intec, Inc.	Ultra Base	138
U.S. Intec, Inc.	Permavemt	148
1 Dynamic Pull-Through Values listed relate to 3" diameter plate bonded between listed base sheet and one ply of type IV in 25 lbs/sq of ASTM D 312, type III asphalt.		

EVIDENCE SUBMITTED:

Test Agency/Identifier	Name	Report	Date
Factory Mutual Research Corporation	FMRC 4454 (PA 114)	J.I. 1Y2A4.AM	Aug. 1995
The Center for Applied Engineering, Inc.	PA 114, Appendix E	25-7361	Aug. 1995
Trinity Engineering, Inc.	PA 117(A) & PA 117(B)	#4730.12.95-1	Dec. 1995

Detail "A"

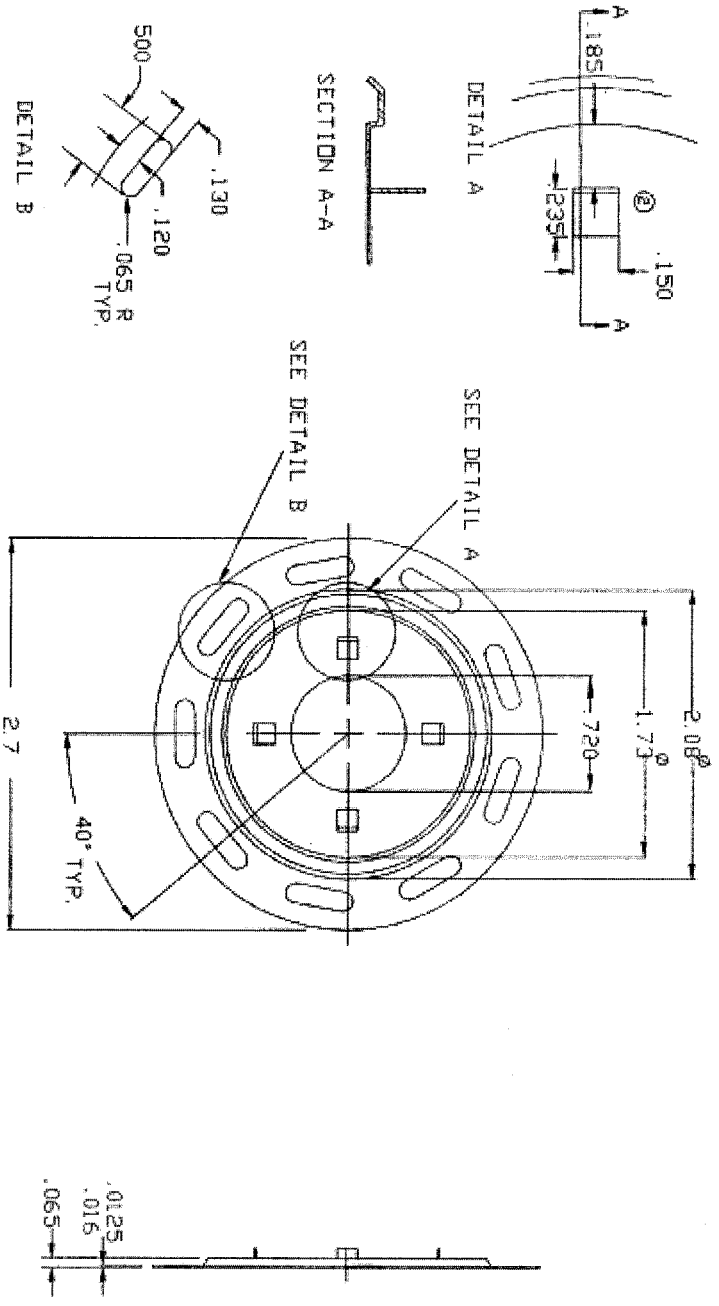
A
.185
DETAIL A
.235
.150
A
SECTION A-A
500
.130
.120
.065 R
TYP.
DETAIL B
SEE DETAIL B
SEE DETAIL A
.720
2.08Ø
1.73Ø
2.7
40° TYP.
.0125
.016
.065

Detail "B"

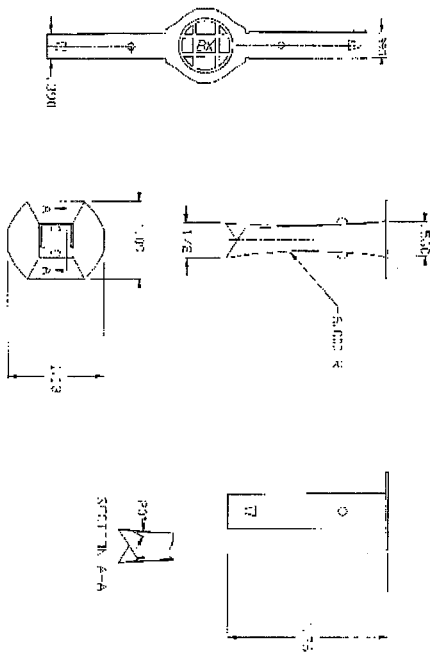

GENERAL LIMITATIONS:

1. Refer to Roof Assembly Product Control Notice of Acceptance for use, density and attachment patterns.
2. ITW Buildex, Lite Weight Concrete Fasteners shall not be used to attach insulation or single-ply membrane.
3. Fasteners shall be installed in strict compliance with manufacturer's installation instructions, and in compliance with the requirements set forth in Roofing Application Standard RAS 117.
4. Care shall be taken not to puncture or tear the base sheet during fastener installation.
5. All products listed herein shall have a quality assurance audit in accordance with the Florida Building Code and Rule 9B-72 of the Florida Administrative Code.

END OF THIS ACCEPTANCE