MIAMI-DADE

BUILDING CODE COMPLIANCE OFFICE (BCCO)
PRODUCT CONTROL DIVISION

MIAMI-DADE COUNTY, FLORIDA
METRO-DADE FLAGLER BUILDING
140 WEST FLAGLER STREET, SUITE 1603
MIAMI, FLORIDA 33130-1563
(305) 375-2901 FAX (305) 375-2908

NOTICE OF ACCEPTANCE (NOA)

Raynor Garage Doors.
1101 E. River Road.
Dixon IL 61021

Scope. This NOA is being issued under the applicable rules and regulations governing the use of construction materials. The documentation submitted has been reviewed by Miami-Dade County Product Control Division and accepted by the Board of Rules and Appeals (BORA) to be used in Miami Dade County and other areas where allowed by the Authority Having Jurisdiction (AHJ).

This NOA shall not be valid after the expiration date stated below. The Miami-Dade County Product Control Division (In Miami Dade County) and/or the AHJ (in areas other than Miami Dade County) reserve the right to have this product or material tested for quality assurance purposes. If this product or material fails to perform in the accepted manner, the manufacturer will incur the expense of such testing and the AHJ may immediately revoke, modify, or suspend the use of such product or material within their jurisdiction. BORA reserves the right to revoke this acceptance, if it is determined by Miami-Dade County Product Control Division that this product or material fails to meet the requirements of the applicable building code.
This product is approved as described herein, and has been designed to comply with the Florida Building Code including High Velocity Hurricane Zone.
DESCRIPTION: 8' Wide Roll-Up Door.
APPROVAL DOCUMENT: Drawing No. P-1286, dated 12/05/03, with last revision on 04/28/04, titled "Spec, Windload Series UF/FF/OF Flat Slat", sheets 1 of 1, prepared by Raynor Garage Doors signed and sealed by R. A. Baumann PE, bearing the Miami-Dade County Product Control Approval stamp with the Notice of Acceptance number and approval date by the Miami-Dade County Product Control Division.
LIMITATION: This approval requires the manufacturer to do testing of all coils used to fabricate door slats under this Notice of Acceptance. A minimum of 2 specimens shall be cut from each coil and tensile tested according to ASTM E-8 by a Miami-Dade County approved laboratory selected and paid by the manufacturer. Every 3 months four times a year, the manufacturer shall mail to this office: a copy of the tested reports with confirmation that the specimens were selected from coils at the manufacturer production facilities. And a notarized statement from the manufacturer that only coils with yield strength of 50,000 psi or more shall be used to make door slats for Miami-Dade County under this Notice of Acceptance.
MISSILE IMPACT RATING: Large and Small Missile Impact
LABELING: Each unit shall bear a permanent label with the manufacturer's name or logo, city, state and following statement: "Miami-Dade County Product Control Approved", unless otherwise noted herein.
RENEWAL of this NOA shall be considered after a renewal application has been filed and there has been no change in the applicable building code negatively affecting the performance of this product.
TERMINATION of this NOA will occur after the expiration date or if there has been a revision or change in the materials, use, and/or manufacture of the product or process. Misuse of this NOA as an endorsement of any product, for sales, advertising or any other purposes shall automatically terminate this NOA. Failure to comply with any section of this NOA shall be cause for termination and removal of NOA.
ADVERTISEMENT: The NOA number preceded by the words Miami-Dade County, Florida, and followed by the expiration date may be displayed in advertising literature. If any portion of the NOA is displayed, then it shall be done in its entirety.
INSPECTION: A copy of this entire NOA shall be provided to the user by the manufacturer or its distributors and shall be available for inspection at the job site at the request of the Building Official.
This NOA consists of this page, evidence page as well as approval document mentioned above.
The submitted documentation was reviewed by **Candido E. Font PE.**

06/17/04

PRODUCT CONTROL ACCEPTED

Raynor Garage Doors.

NOTICE OF ACCEPTANCE: EVIDENCE PAGE

A DRAWING:

1. Drawing No. P-1286, titled "Spec, Windload Series UF/FF/OF Flat Slat ", sheet 1 of 1, prepared by Raynor Garage Doors, dated 12/05/03, with latest revision on 04/28/04, signed and sealed by R. A. Baumann PE.

B TEST:

1. Test report on Large Missile Impact Test per TAS 201 & Cyclic Wind Pressure Test per TAS 203 on "18 GA Series UF/FF Slat Rolling Steel Door". prepared by Hurricane Engineering & Testing Inc, report # HETI 03-1877, dated 01/08/04 (Revised on 04/28/04), signed and sealed by R. E. Droz-Seda, PE.
2. Test report on Uniform Static Air Pressure Test per TAS 202 & Force Entry Resistant Test on "Rolling Steel Door." Hurricane Engineering & Testing, report # HETI 03-1876, dated 01/08/04, signed and sealed by R. E. Droz-Seda, PE.

C CALCULATIONS:

1. Calculations for door guide and fasteners loads, prepared by R. A. Baumann. sheet 1 of 1, signed and sealed by R. A. Baumann PE, on 02/28/05.

D. QUALITY ASSURANCE:

1. Miami-Dade Product Control Office.

E. STATEMENTS:

1. Code Compliance letter issued by Wendler Engineering Services Inc, on 02/25/04, signed and sealed by R. A. Baumann. PE.
2. No interest letter issued by Wendler Engineering Services Inc on 02/25/04, signed by R. A. Baumann and notarized C. A. Knight.

F. MATERIAL CERTIFICATION:

1. Hurricane Engineering & Testing Inc Report # HETI 03-T086 of test per ASTM E8, of 0.049 steel GA, dated 01/09/04, signed by R. E. Droz-Seda, P.E.

06/17/04

Candido F. Font PE
Senior Product Control Examiner
NOA No 04-0303.04
Expiration Date: June 17, 2009
Approval Date: June 17, 2004

NOTE: FOR THRU-BOLT W/MASONRY USE SAME WALL FASTENER SPACING AS STEEL JAMB

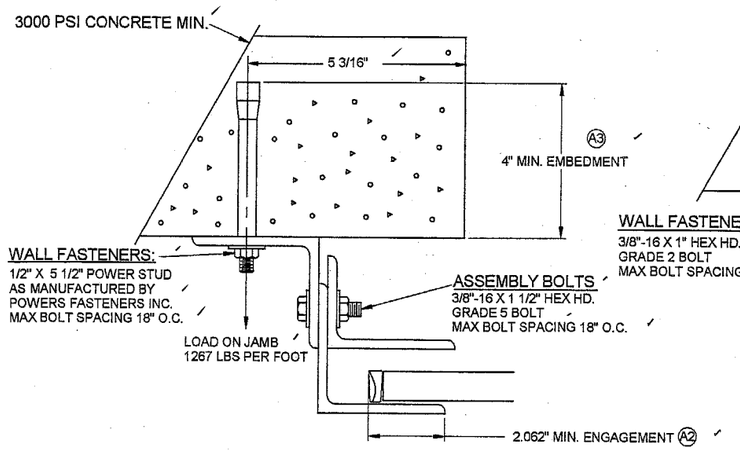

MASONRY JAMB -"Z" MTD.

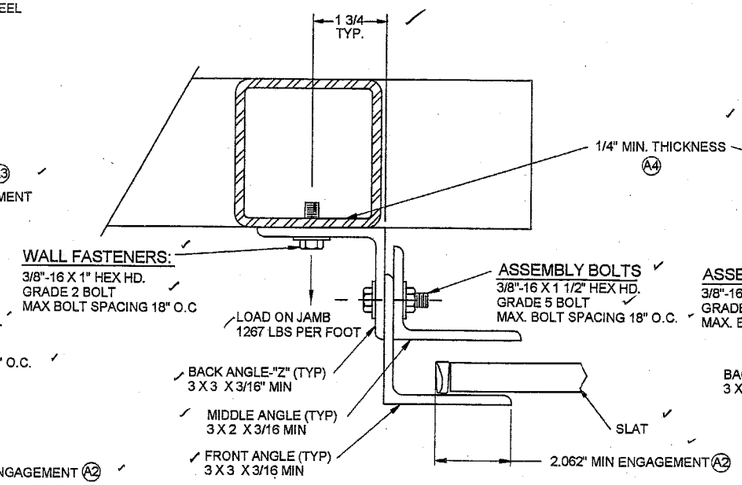

STEEL JAMB -"Z" MTD.

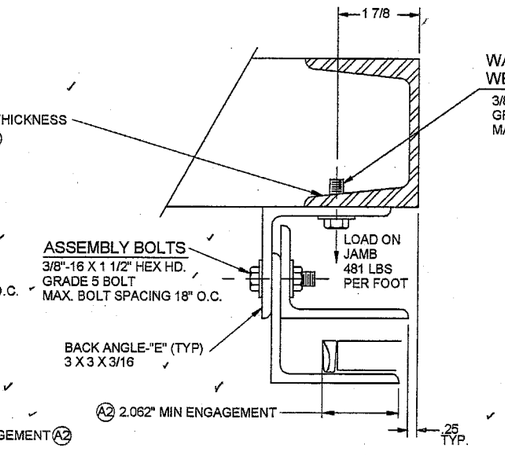

STEEL JAMB - "E" MTD.

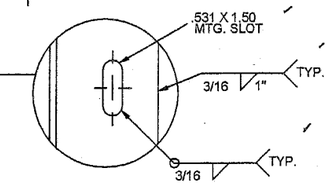

GENERAL NOTES

SPECIFICATIONS:

CURTAIN- INTERLOCKING SLATS ROLLFORMED FROM COMMERCIAL QUALITY HOT DIPPED GALVANIZED (G-90) STEEL PER ASTM A-525 AND A-526. MINIMUM YIELD ON STEEL SLATS IS 50875 PSI. FINISH SHALL BE A TWO COAT BAKED ON PAINT APPLIED PRIOR TO ROLLFORMING. MALLEABLE IRON GALVANIZED ENDLOCKS FASTENED TO ALTERNATE SLATS WITH TWO ZINC PLATED STEEL RIVETS PER LOCK, ELIMINATE LATERAL MOVEMENT. BOTTOM OF CURTAIN SHALL BE REINFORCED WITH 1 1/4" X 2 1/16" X .078 TUBULAR BOTTOM BAR

GUIDES-STRUCTURAL STEEL ANGLES PER ASTM A-36,MINIMUM 3/16" THICK, PROVIDED WITH FOUR REMOVABLE CURTAIN STOPS.

BRACKETS-STEEL PLATES, MINIMUM 1/4" THICK, BOLTED TO GUIDES FOR MOUNTING CURTAIN AND BARREL ASSEMBLY. DRIVE SIDE BRACKET SHALL BE FITTED WITH A SEALED BALL BEARING FOR LONG LIFE.

BARREL-STRUCTURAL STEEL PIPE PER ASTM A-500 OR ASTM A-120, MINIMUM 4 1/2" O.D. X .120" WALL AND DESIGNED TO LIMIT MAXIMUM DEFLECTION UNDER LOAD TO .03" PER FOOT OF SPAN.

SPRING COUNTERBALANCE-THE CURTAIN SHALL BE COUNTERBALANCED BY MEANS OF OIL TEMPERED, HELICAL TORSION SPRINGS, GREASE-PACKED AND MOUNTED ON A SINGLE CONTINUOUS STEEL TORSION SHAFT. SPRINGS SHALL BE COMPRESSION SPRING DESIGN TO FACILITATE ANY COUNTER-BALANCE MAINTENANCE. CAST IRON SPRING ANCHORS SHALL TRANSFER FULL SPRING LOADING TO THE BARREL

A5 THE OPERATING MECHANISM MUST BE CERTIFIED BY AN INDEPENDENT TESTING AGENCY

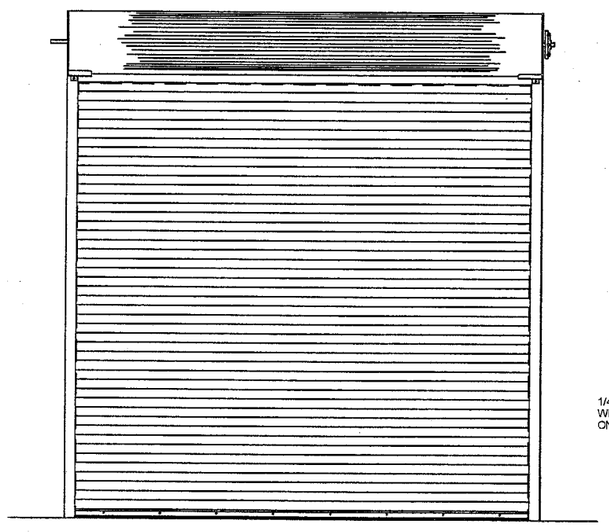

ELEVATION
NOT TO SCALE

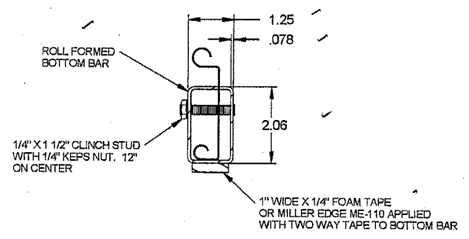

BOTTOM BAR DETAIL A1

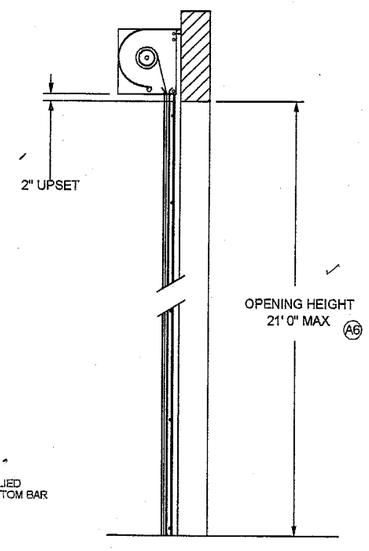

SECTION THRU OPENING
NOT TO SCALE

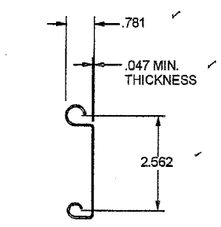

SLAT TYPE "UF/FF/OF"

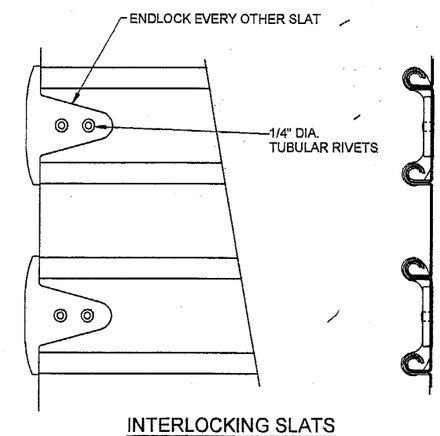

INTERLOCKING SLATS

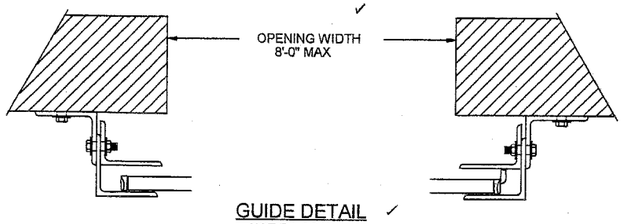

GUIDE DETAIL
NOT TO SCALE

5-10-04 EXPIRES 2-28-05
REGISTERED ENGINEER: RICHARD A. BAUMANN
STATE REGISTRATION NUMBER: 0036469

THIS AREA IS FOR DADE COUNTY USE ONLY

Approved as complying with the Florida Building Code
Date 04-0303.04
NOA# 06117.04
Miami Dade Product Control Division
By

DESIGN LOAD
+66 PSF
- 66 PSF
LARGE MISSLE IMPACT RESISTANT

REV.	DESCRIPTION	ECN. NO.	DATE
A	1) ADDED BOTTOM BAR DETAIL. 2) ADDED CURTAIN ENGAGEMENT 3) ADDED ANCHOR EMBEDMENT. 4) ADDED MATERIAL THICKNESS. 5) ADDED OPERATION NOTE. 6) CHANGED DOOR HEIGHT	4696	4/28/04

SCALE: HALF
DRAWN BY: G. WEDEKIND
CHECKED BY: J. BONNELL
DATE: 12/05/03
ECN. NO.: 4696

RAYNOR GARAGE DOORS
BOX 448,EAST RIVER ROAD
DIXON, ILL. 61021

TITLE: SPEC., WINDLOAD SERIES "UF/FF/OF" FLAT SLAT

NO. P-1286 SHEET 1 OF 1 REV A