MIAMI-DADE COUNTY

BUILDING CODE COMPLIANCE OFFICE (BCCO)
PRODUCT CONTROL DIVISION

MIAMI-DADE COUNTY, FLORIDA
METRO-DADE FLAGLER BUILDING
140 WEST FLAGLER STREET, SUITE 1603
MIAMI, FLORIDA 33130-1563
(305) 375-2901 FAX (305) 375-2908

NOTICE OF ACCEPTANCE (NOA)

Windoor, Inc.
1978 Stanhome Way
Orlando, FL 32804

SCOPE:

This NOA is being issued under the applicable rules and regulations governing the use of construction materials. The documentation submitted has been reviewed by Miami-Dade County Product Control Division and accepted by the Board of Rules and Appeals (BORA) to be used in Miami Dade County and other areas where allowed by the Authority Having Jurisdiction (AHJ).

This NOA shall not be valid after the expiration date stated below. The Miami-Dade County Product Control Division (In Miami Dade County) and/or the AHJ (in areas other than Miami Dade County) reserve the right to have this product or material tested for quality assurance purposes. If this product or material fails to perform in the accepted manner, the manufacturer will incur the expense of such testing and the AHJ may immediately revoke, modify, or suspend the use of such product or material within their jurisdiction. BORA reserves the right to revoke this acceptance, if it is determined by Miami-Dade County Product Control Division that this product or material fails to meet the requirements of the applicable building code.

This product is approved as described herein, and has been designed to comply with the Florida Building Code, including the High Velocity Hurricane Zone.

DESCRIPTION: Series 8000 Aluminum Sliding Glass Door-S.M.I.

APPROVAL DOCUMENT: Drawing No. **WIND0077**, titled "Series 8000 SGD Small Missile Elevation and General |Notes", sheets 1 through 8 of 8, prepared by Product Technology Corporation, dated by 07/22/04 with revision **"A"** on 12/21/04, signed and sealed by Eric S. Nielsen, P.E., bearing the Miami-Dade County Product Control Approval stamp with the Notice of Acceptance number and approval date by the Miami-Dade County Product Control Division.

MISSILE IMPACT RATING: Small Missile Impact

LABELING: Each unit shall bear a permanent label with the manufacturer's name or logo, city, state and following statement: "Miami-Dade County Product Control Approved", unless otherwise noted herein.

RENEWAL of this NOA shall be considered after a renewal application has been filed and there has been no change in the applicable building code negatively affecting the performance of this product.

TERMINATION of this NOA will occur after the expiration date or if there has been a revision or change in the materials, use, and/or manufacture of the product or process. Misuse of this NOA as an endorsement of any product, for sales, advertising or any other purposes shall automatically terminate this NOA. Failure to comply with any section of this NOA shall be cause for termination and removal of NOA.

ADVERTISEMENT: The NOA number preceded by the words Miami-Dade County, Florida, and followed by the expiration date may be displayed in advertising literature. If any portion of the NOA is displayed, then it shall be done in its entirety.

INSPECTION: A copy of this entire NOA shall be provided to the user by the manufacturer or its distributors and shall be available for inspection at the job site at the request of the Building Official.
This NOA consists of this page 1 and evidence pages E-1, as well as approval document mentioned above
The submitted documentation was reviewed by **Herminio F. Gonzalez, P.E., Director, BCCO**

4/18/2005

PRODUCT CONTROL ACCEPTED

Windoor, Inc.

NOTICE OF ACCEPTANCE: EVIDENCE SUBMITTED

A. DRAWINGS

1. Manufacturer's die drawings and sections.
2. Drawing No.**WIND0077** titled "Series 8000 SGD Small Missile Elevation and General Notes", Sheets 1 through 8 of 8, prepared by Product Technology Corporation dated 07/22/04 with revision **"A"** on 12/21/04, signed and sealed by Eric S. Nielsen, P.E.

B. TESTS

1. Test reports on 1) Air Infiltration Test, per FBC, TAS 202-94
   2) Uniform Static Air Pressure Test, Loading per FBC, TAS 202-94
   3) Water Resistance Test, per FBC, TAS 202-94
   4) Small Missile Impact Test per FBC, TAS 201-94(aggregate gravels)
   5) Cyclic Wind Pressure Loading per FBC, TAS 203-94
   6) Forced Entry Test, per FBC 2411 3.2.1 (b) and TAS 202-94

   along with marked-up drawings and installation diagram of an aluminum sliding glass door, prepared by National Certified Testing Laboratories, Test Report No. **NCTL-210-3018-1,** dated 05/03/04, signed and sealed by Gerald J. Ferrara, P.E.

C. CALCULATIONS

1. Anchor Calculations, ASTM-E1300, and structural analysis, prepared by Product Technology Corporation, dated 08/03/04, signed and sealed by Eric S. Nielsen, P.E.

D. QUALITY ASSURANCE

1. Miami Dade Building Code Compliance Office (BCCO).

E. MATERIAL CERTIFICATIONS

1. Notice of Acceptance No.**03-0421.01** for" Saflex HP a polyvinyl butryal interlayer for lamination of glass" issued to Solutia Inc., approved on 05/22/03 with expiration date of 04/14/08.

F. STATEMENTS

1. Statement letter of compliance and no financial interest, dated October 05, 2004, signed and sealed by Eric S. Nielsen, P.E.

G. OTHER

1. Letter from the consultant stating that the product is in compliance with the Florida Building Code.

for

Herminio F. Gonzalez, P.E.
Director, Building Code Compliance Office
NOA No 04-1019.01
Expiration Date: May 12, 2010
Approval Date: May 12, 2005

GENERAL NOTES:

1) THE PRODUCT SHOWN HEREIN IS DESIGNED AND MANUFACTURED TO COMPLY WITH THE HVHZ FLORIDA BUILDING CODE.
2) WOOD BUCK, STEEL OR WOOD FRAMING TO BE DESIGNED AND ANCHORED TO PROPERLY TRANSFER ALL LOADS TO STRUCTURE, BUCK OR FRAMING IS RESPONSIBILITY OF ARCHITECT OF RECORD. (A)
3) PRODUCTS ARE APPROVED FOR USE WHERE SMALL MISSILE IMPACT RESISTANCE IS REQUIRED. IMPACT PROTECTIVE SYSTEM IS NOT REQUIRED. "FOR INSTALLATION OF THIS PRODUCT 30" ABOVE GROUND LEVEL.
4) SEE COMPARATIVE ANALYSIS & DESIGN PRESSURE TABLES ON SHEET 2 FOR QUALIFIED CONFIGURATIONS AND DESIGN PRESSURE RATINGS.

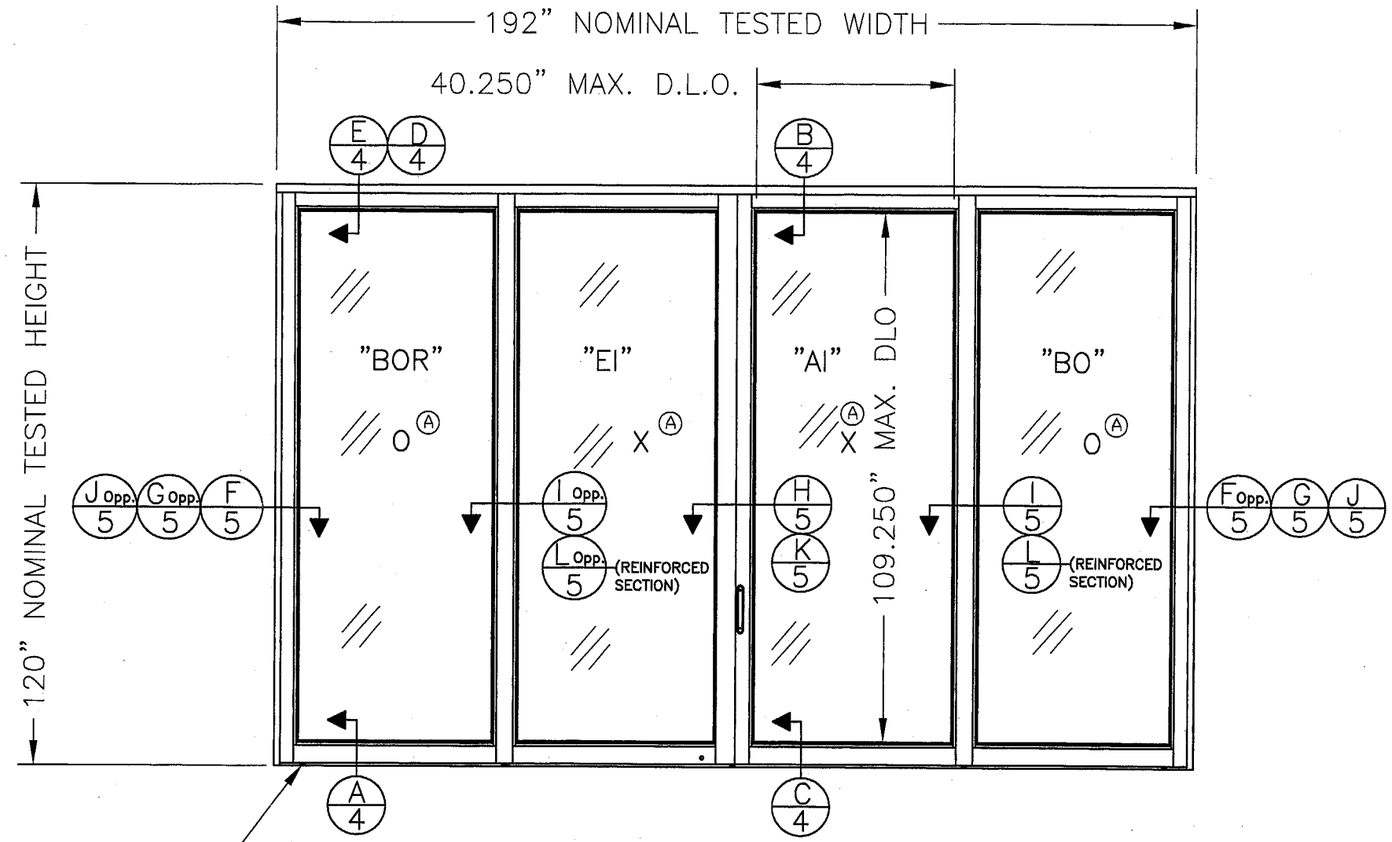

WEEP HOLE
1" X 0.1875" TYP.

8000 OXXO SLIDING GLASS DOOR

"BOR" PANEL (FIXED) = 49-1/2" X 118-5/16"
"EI" PANEL (ACTIVE) = 50-1/4" X 118-5/16"
"AI" PANEL (ACTIVE) = 49-1/2" X 118-5/16"
"BO" PANEL (FIXED) = 49-1/2" X 118-5/16"

TABLE OF CONTENTS

SHEET	SHEET DESCRIPTION
1	ELEVATION & GENERAL NOTES
2	COMPARATIVE ANALYSIS & DESIGN PRESSURE TABLES
3	ANCHORING DETAILS
4	VERTICAL CROSS SECTIONS
5	HORIZONTAL CROSS SECTIONS
6	GLAZING DETAILS
7	BILL OF MATERIALS
8	COMPONENTS

Approved as complying with the Florida Building Code
Date 03/12/05
NOA# 04-1019.01
Miami-Dade Product Control Division
By

SYM	REVISION	DATE	BY
A	Per Dade letter dated 12/03/04	12/21/04	DRL

1/24/05
Eric S. Nielsen
Florida P. E. No. 41323
Product Technology Corporation
1150 Louisiana Ave., Suite 6
Winter Park, Florida 32789
FBPE Certificate of Authorization NO. 8681

WINDOOR, INC.
1978 STANHOME WAY, ORLANDO, FL.

TITLE: SERIES 8000 SGD SMALL MISSILE ELEVATION AND GENERAL NOTES

PREPARED BY: PTC Product Technology Corporation
Phone 407.622.6334 Fax 407.622.6335

DRN: BB	DATE: 07/22/04
SCALE: N.T.S.	DWG. NO: WIND0077
REV: A	SHEET: 1 OF 8

Table1 Comparative Analysis And Design Pressure Table Reinforced Units

Configuration	Overall Nominal Size (in)	Design Pressure w/Reinforcement (psf)					
		Pos: With Sill Riser Height					Neg
		4 1/4"	3 1/2"	3"	2 1/4"	1 1/2"	
OX, XO, XX	48 " x 80 "	+ 120.0	+ 100.0	+ 80.0	+ 60.0	+ 45.0	- 150.0
OX, XO, XX	60 " x 80 "	+ 120.0	+ 100.0	+ 80.0	+ 60.0	+ 45.0	- 150.0
OX, XO, XX	72 " x 80 "	+ 120.0	+ 100.0	+ 80.0	+ 60.0	+ 45.0	- 150.0
OX, XO, XX	84 " x 80 "	+ 120.0	+ 100.0	+ 80.0	+ 60.0	+ 45.0	- 150.0
OX, XO, XX	96 " x 80 "	+ 120.0	+ 100.0	+ 80.0	+ 60.0	+ 45.0	- 150.0
OX, XO, XX	48 " x 96 "	+ 120.0	+ 100.0	+ 80.0	+ 60.0	+ 45.0	- 150.0
OX, XO, XX	60 " x 96 "	+ 120.0	+ 100.0	+ 80.0	+ 60.0	+ 45.0	- 150.0
OX, XO, XX	72 " x 96 "	+ 120.0	+ 100.0	+ 80.0	+ 60.0	+ 45.0	- 150.0
OX, XO, XX	84 " x 96 "	+ 117.0	+ 100.0	+ 80.0	+ 60.0	+ 45.0	- 146.0
OX, XO, XX	96 " x 96 "	+ 106.0	+ 100.0	+ 80.0	+ 60.0	+ 45.0	- 133.0
OX, XO, XX	48 " x 108 "	+ 120.0	+ 100.0	+ 80.0	+ 60.0	+ 45.0	- 150.0
OX, XO, XX	60 " x 108 "	+ 120.0	+ 100.0	+ 80.0	+ 60.0	+ 45.0	- 150.0
OX, XO, XX	72 " x 108 "	+ 113.0	+ 100.0	+ 80.0	+ 60.0	+ 45.0	- 142.0
OX, XO, XX	84 " x 108 "	+ 100.0	+ 100.0	+ 80.0	+ 60.0	+ 45.0	- 126.0
OX, XO, XX	96 " x 108 "	+ 91.0	+ 91.0	+ 80.0	+ 60.0	+ 45.0	- 114.0
OX, XO, XX	60 " x 120 "	+ 117.0	+ 100.0	+ 80.0	+ 60.0	+ 45.0	- 146.0
OX, XO, XX	72 " x 120 "	+ 100.0	+ 100.0	+ 80.0	+ 60.0	+ 45.0	- 125.0
OX, XO, XX	84 " x 120 "	+ 88.0	+ 88.0	+ 80.0	+ 60.0	+ 45.0	- 110.0
OX, XO, XX	96 " x 120 "	+ 80.0	+ 80.0	+ 80.0	+ 60.0	+ 45.0	- 100.0
OXO	72 " x 80 "	+ 120.0	+ 100.0	+ 80.0	+ 60.0	+ 45.0	- 150.0
OXO	90 " x 80 "	+ 120.0	+ 100.0	+ 80.0	+ 60.0	+ 45.0	- 150.0
OXO	108 " x 80 "	+ 120.0	+ 100.0	+ 80.0	+ 60.0	+ 45.0	- 150.0
OXO	126 " x 80 "	+ 120.0	+ 100.0	+ 80.0	+ 60.0	+ 45.0	- 150.0
OXO	144 " x 80 "	+ 120.0	+ 100.0	+ 80.0	+ 60.0	+ 45.0	- 150.0
OXO	72 " x 96 "	+ 120.0	+ 100.0	+ 80.0	+ 60.0	+ 45.0	- 150.0
OXO	90 " x 96 "	+ 120.0	+ 100.0	+ 80.0	+ 60.0	+ 45.0	- 150.0
OXO	108 " x 96 "	+ 120.0	+ 100.0	+ 80.0	+ 60.0	+ 45.0	- 150.0
OXO	126 " x 96 "	+ 117.0	+ 100.0	+ 80.0	+ 60.0	+ 45.0	- 146.0
OXO	144 " x 96 "	+ 106.0	+ 100.0	+ 80.0	+ 60.0	+ 45.0	- 133.0
OXO	72 " x 108 "	+ 120.0	+ 100.0	+ 80.0	+ 60.0	+ 45.0	- 150.0
OXO	90 " x 108 "	+ 120.0	+ 100.0	+ 80.0	+ 60.0	+ 45.0	- 150.0
OXO	108 " x 108 "	+ 113.0	+ 100.0	+ 80.0	+ 60.0	+ 45.0	- 142.0
OXO	126 " x 108 "	+ 100.0	+ 100.0	+ 80.0	+ 60.0	+ 45.0	- 126.0
OXO	144 " x 108 "	+ 91.0	+ 91.0	+ 80.0	+ 60.0	+ 45.0	- 114.0
OXO	90 " x 120 "	+ 117.0	+ 100.0	+ 80.0	+ 60.0	+ 45.0	- 146.0
OXO	108 " x 120 "	+ 100.0	+ 100.0	+ 80.0	+ 60.0	+ 45.0	- 125.0
OXO	126 " x 120 "	+ 88.0	+ 88.0	+ 80.0	+ 60.0	+ 45.0	- 110.0
OXO	144 " x 120 "	+ 80.0	+ 80.0	+ 80.0	+ 60.0	+ 45.0	- 100.0
OXXO	96 " x 80 "	+ 120.0	+ 100.0	+ 80.0	+ 60.0	+ 45.0	- 150.0
OXXO	120 " x 80 "	+ 120.0	+ 100.0	+ 80.0	+ 60.0	+ 45.0	- 150.0
OXXO	144 " x 80 "	+ 120.0	+ 100.0	+ 80.0	+ 60.0	+ 45.0	- 150.0
OXXO	168 " x 80 "	+ 120.0	+ 100.0	+ 80.0	+ 60.0	+ 45.0	- 150.0
OXXO	192 " x 80 "	+ 120.0	+ 100.0	+ 80.0	+ 60.0	+ 45.0	- 150.0
OXXO	96 " x 96 "	+ 120.0	+ 100.0	+ 80.0	+ 60.0	+ 45.0	- 150.0
OXXO	120 " x 96 "	+ 120.0	+ 100.0	+ 80.0	+ 60.0	+ 45.0	- 150.0
OXXO	144 " x 96 "	+ 120.0	+ 100.0	+ 80.0	+ 60.0	+ 45.0	- 150.0
OXXO	168 " x 96 "	+ 117.0	+ 100.0	+ 80.0	+ 60.0	+ 45.0	- 146.0
OXXO	192 " x 96 "	+ 106.0	+ 100.0	+ 80.0	+ 60.0	+ 45.0	- 133.0
OXXO	96 " x 108 "	+ 120.0	+ 100.0	+ 80.0	+ 60.0	+ 45.0	- 145.7
OXXO	120 " x 108 "	+ 120.0	+ 100.0	+ 80.0	+ 60.0	+ 45.0	- 144.4
OXXO	144 " x 108 "	+ 113.0	+ 100.0	+ 80.0	+ 60.0	+ 45.0	- 142.0
OXXO	168 " x 108 "	+ 100.0	+ 100.0	+ 80.0	+ 60.0	+ 45.0	- 126.0
OXXO	192 " x 108 "	+ 91.0	+ 91.0	+ 80.0	+ 60.0	+ 45.0	- 114.0
OXXO	120 " x 120 "	+ 117.0	+ 100.0	+ 80.0	+ 60.0	+ 45.0	- 130.5
OXXO	144 " x 120 "	+ 100.0	+ 100.0	+ 80.0	+ 60.0	+ 45.0	- 125.0
OXXO	168 " x 120 "	+ 88.0	+ 88.0	+ 80.0	+ 60.0	+ 45.0	- 110.0
OXXO	192 " x 120 "	+ 80.0	+ 80.0	+ 80.0	+ 60.0	+ 45.0	- 100.0

Table2 Comparative Analysis And Design Pressure Table Non-Reinforced Units

Configuration	Overall Nominal Size (in)	Design Pressure w/out Reinforcement (psf)					
		Pos: With Sill Riser Height					Neg
		4 1/4"	3 1/2"	3"	2 1/4"	1 1/2"	
OX, XO, XX	48 " x 80 "	+ 75.0	+ 75.0	+ 75.0	+ 60.0	+ 45.0	- 90.0
OX, XO, XX	60 " x 80 "	+ 75.0	+ 75.0	+ 75.0	+ 60.0	+ 45.0	- 90.0
OX, XO, XX	72 " x 80 "	+ 75.0	+ 75.0	+ 75.0	+ 60.0	+ 45.0	- 90.0
OX, XO, XX	84 " x 80 "	+ 75.0	+ 75.0	+ 75.0	+ 60.0	+ 45.0	- 90.0
OX, XO, XX	96 " x 80 "	+ 75.0	+ 75.0	+ 75.0	+ 60.0	+ 45.0	- 90.0
OX, XO, XX	48 " x 96 "	+ 75.0	+ 75.0	+ 75.0	+ 60.0	+ 45.0	- 90.0
OX, XO, XX	60 " x 96 "	+ 75.0	+ 75.0	+ 75.0	+ 60.0	+ 45.0	- 90.0
OX, XO, XX	72 " x 96 "	+ 75.0	+ 75.0	+ 75.0	+ 60.0	+ 45.0	- 90.0
OX, XO, XX	84 " x 96 "	+ 73.0	+ 73.0	+ 73.0	+ 60.0	+ 45.0	- 87.0
OX, XO, XX	96 " x 96 "	+ 66.0	+ 66.0	+ 66.0	+ 60.0	+ 45.0	- 80.0
OX, XO, XX	48 " x 108 "	+ 75.0	+ 75.0	+ 75.0	+ 60.0	+ 45.0	- 90.0
OX, XO, XX	60 " x 108 "	+ 75.0	+ 75.0	+ 75.0	+ 60.0	+ 45.0	- 90.0
OX, XO, XX	72 " x 108 "	+ 71.0	+ 71.0	+ 71.0	+ 60.0	+ 45.0	- 85.0
OX, XO, XX	84 " x 108 "	+ 63.0	+ 63.0	+ 63.0	+ 60.0	+ 45.0	- 75.0
OX, XO, XX	96 " x 108 "	+ 57.0	+ 57.0	+ 57.0	+ 57.0	+ 45.0	- 68.0
OX, XO, XX	60 " x 120 "	+ 73.0	+ 73.0	+ 73.0	+ 60.0	+ 45.0	- 87.0
OX, XO, XX	72 " x 120 "	+ 62.0	+ 62.0	+ 62.0	+ 60.0	+ 45.0	- 75.0
OX, XO, XX	84 " x 120 "	+ 55.0	+ 55.0	+ 55.0	+ 55.0	+ 45.0	- 66.0
OX, XO, XX	96 " x 120 "	+ 50.0	+ 50.0	+ 50.0	+ 50.0	+ 45.0	- 60.0
OXO	72 " x 80 "	+ 75.0	+ 75.0	+ 75.0	+ 60.0	+ 45.0	- 90.0
OXO	90 " x 80 "	+ 75.0	+ 75.0	+ 75.0	+ 60.0	+ 45.0	- 90.0
OXO	108 " x 80 "	+ 75.0	+ 75.0	+ 75.0	+ 60.0	+ 45.0	- 90.0
OXO	126 " x 80 "	+ 75.0	+ 75.0	+ 75.0	+ 60.0	+ 45.0	- 90.0
OXO	144 " x 80 "	+ 75.0	+ 75.0	+ 75.0	+ 60.0	+ 45.0	- 90.0
OXO	72 " x 96 "	+ 75.0	+ 75.0	+ 75.0	+ 60.0	+ 45.0	- 90.0
OXO	90 " x 96 "	+ 75.0	+ 75.0	+ 75.0	+ 60.0	+ 45.0	- 90.0
OXO	108 " x 96 "	+ 75.0	+ 75.0	+ 75.0	+ 60.0	+ 45.0	- 90.0
OXO	126 " x 96 "	+ 73.0	+ 73.0	+ 73.0	+ 60.0	+ 45.0	- 87.0
OXO	144 " x 96 "	+ 66.0	+ 66.0	+ 66.0	+ 60.0	+ 45.0	- 80.0
OXO	72 " x 108 "	+ 75.0	+ 75.0	+ 75.0	+ 60.0	+ 45.0	- 90.0
OXO	90 " x 108 "	+ 75.0	+ 75.0	+ 75.0	+ 60.0	+ 45.0	- 90.0
OXO	108 " x 108 "	+ 71.0	+ 71.0	+ 71.0	+ 60.0	+ 45.0	- 85.0
OXO	126 " x 108 "	+ 63.0	+ 63.0	+ 63.0	+ 60.0	+ 45.0	- 75.0
OXO	144 " x 108 "	+ 57.0	+ 57.0	+ 57.0	+ 57.0	+ 45.0	- 68.0
OXO	90 " x 120 "	+ 73.0	+ 73.0	+ 73.0	+ 60.0	+ 45.0	- 87.0
OXO	108 " x 120 "	+ 62.0	+ 62.0	+ 62.0	+ 60.0	+ 45.0	- 75.0
OXO	126 " x 120 "	+ 55.0	+ 55.0	+ 55.0	+ 55.0	+ 45.0	- 66.0
OXO	144 " x 120 "	+ 50.0	+ 50.0	+ 50.0	+ 50.0	+ 45.0	- 60.0
OXXO	96 " x 80 "	+ 75.0	+ 75.0	+ 75.0	+ 60.0	+ 45.0	- 90.0
OXXO	120 " x 80 "	+ 75.0	+ 75.0	+ 75.0	+ 60.0	+ 45.0	- 90.0
OXXO	144 " x 80 "	+ 75.0	+ 75.0	+ 75.0	+ 60.0	+ 45.0	- 90.0
OXXO	168 " x 80 "	+ 75.0	+ 75.0	+ 75.0	+ 60.0	+ 45.0	- 90.0
OXXO	192 " x 80 "	+ 75.0	+ 75.0	+ 75.0	+ 60.0	+ 45.0	- 90.0
OXXO	96 " x 96 "	+ 75.0	+ 75.0	+ 75.0	+ 60.0	+ 45.0	- 90.0
OXXO	120 " x 96 "	+ 75.0	+ 75.0	+ 75.0	+ 60.0	+ 45.0	- 90.0
OXXO	144 " x 96 "	+ 75.0	+ 75.0	+ 75.0	+ 60.0	+ 45.0	- 90.0
OXXO	168 " x 96 "	+ 73.0	+ 73.0	+ 73.0	+ 60.0	+ 45.0	- 87.0
OXXO	192 " x 96 "	+ 66.0	+ 66.0	+ 66.0	+ 60.0	+ 45.0	- 80.0
OXXO	96 " x 108 "	+ 75.0	+ 75.0	+ 75.0	+ 60.0	+ 45.0	- 90.0
OXXO	120 " x 108 "	+ 75.0	+ 75.0	+ 75.0	+ 60.0	+ 45.0	- 90.0
OXXO	144 " x 108 "	+ 71.0	+ 71.0	+ 71.0	+ 60.0	+ 45.0	- 85.0
OXXO	168 " x 108 "	+ 63.0	+ 63.0	+ 63.0	+ 60.0	+ 45.0	- 75.0
OXXO	192 " x 108 "	+ 57.0	+ 57.0	+ 57.0	+ 57.0	+ 45.0	- 68.0
OXXO	120 " x 120 "	+ 73.0	+ 73.0	+ 73.0	+ 60.0	+ 45.0	- 87.0
OXXO	144 " x 120 "	+ 62.0	+ 62.0	+ 62.0	+ 60.0	+ 45.0	- 75.0
OXXO	168 " x 120 "	+ 55.0	+ 55.0	+ 55.0	+ 55.0	+ 45.0	- 66.0
OXXO	192 " x 120 "	+ 50.0	+ 50.0	+ 50.0	+ 50.0	+ 45.0	- 60.0

Approved as complying with the Florida Building Code
Date 03/12/05
NOA# 04-1019.01
Miami-Dade Product Control Division
By

SYM	REVISION	DATE	BY
A	Per Dade letter dated 12/03/04	12/21/04	DRL

1/29/05
Eric S. Nielsen
Florida P. E. No. 41323
Product Technology Corporation
1150 Louisiana Ave., Suite 6
Winter Park, Florida 32789
FBPE Certificate of Authorization NO. 8681

WINDOOR, INC.
1978 STANHOME WAY, ORLANDO, FL.

TITLE: SERIES 8000 SGD SMALL MISSILE
COMPARATIVE ANALYSIS & DESIGN PRESSURE CHARTS

PREPARED BY: PTC Product Technology Corporation
Phone 407.622.6334 Fax 407.622.6335

DRN: BB
DATE: 07/14/04
SCALE: N.T.S.
DWG. NO: WIND0077
REV: A
SHEET: 2 OF 8

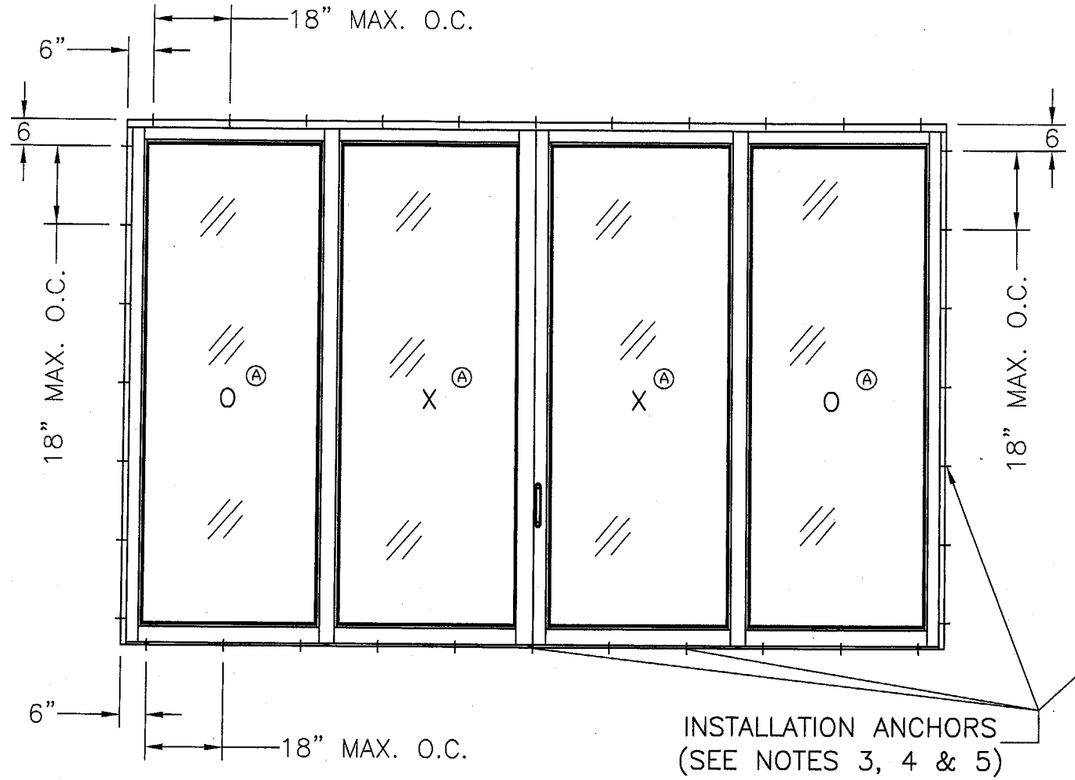

SERIES 8000 OXXO NON REINFORCED SLIDING GLASS DOOR
SEE NOTES THIS SHEET

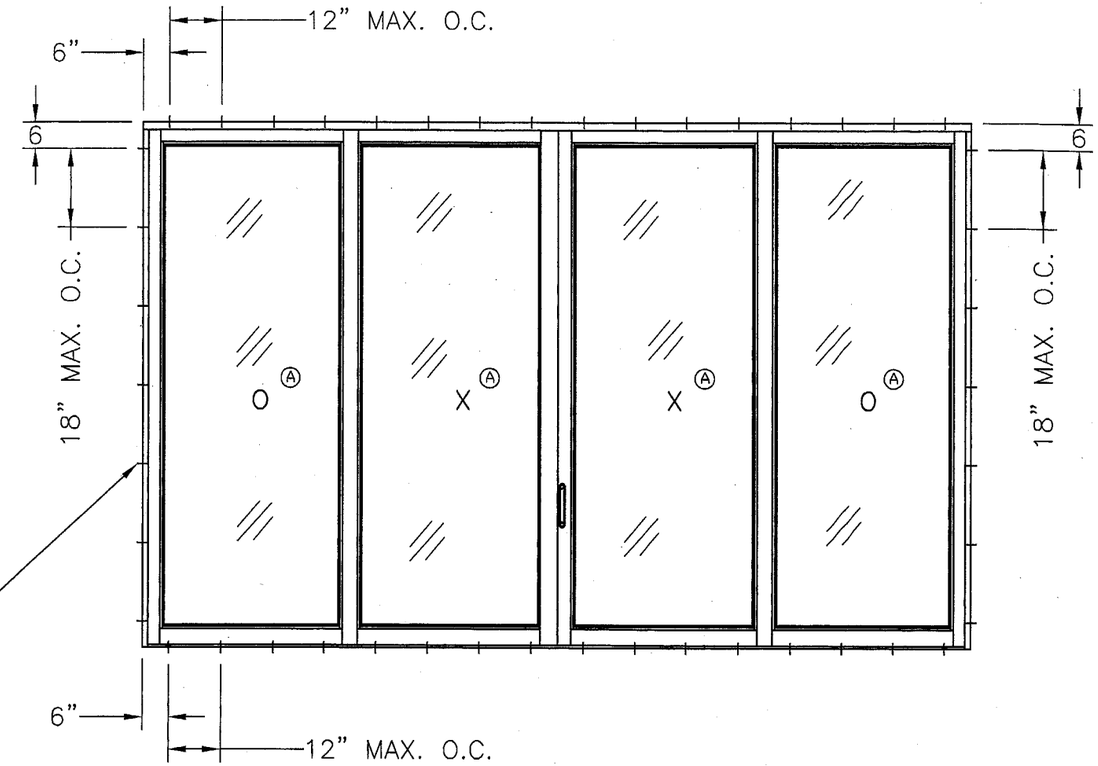

SERIES 8000 OXXO REINFORCED SLIDING GLASS DOOR
SEE NOTES THIS SHEET

INSTALLATION NOTES:

1) SHIM AS REQ'D. AT EA. SET OF INSTALLATION ANCHORS USING LOAD BEARING SHIMS. MAX. ALLOWABLE SHIM STACK TO BE 1/4". USE SHIMS WHERE SPACE GREATER THAN 1/16" IS PRESENT.
2) TWO (2) ANCHORS ARE REQUIRED AT EACH ANCHOR LOCATION SHOWN.
3) CONCRETE OR MASONRY SUBSTRATE WHERE ONE BY, NON-STRUCTRUAL, WOOD BUCKING IS EMPLOYED, USE 1/4" DIA. ITW BUILDEX TAPCON CONCRETE ANCHORS OF SUFFICIENT LENGTH TO ACHIEVE MIN. OF 1-1/4" INTO CONCRETE OR MASONRY.
4) WOOD FRAME SUBSTRATE, USE 5/16" DIA. LAG BOLT OF SUFFICIENT LENGTH TO ACHIEVE MIN. EMBEDMENT OF 2 1/2" INTO WOOD FRAMING.
5) STEEL STUD FRAMING, USE 1/4" DIAMETER SELF TAPPING TEK SCREW OF SUFFICIENT LENGTH TO PENETRATE BEYOND THE STEEL FRAMING A MIN. OF THREE PITCHES OF THREAD.

Approved as complying with the Florida Building Code
Date 05/12/05
NOA# 04-1019.01
Miami-Dade Product Control Division
By

SYM	REVISION	DATE	BY
A	Per Dade letter dated 12/03/04	12/21/04	DRL

1/24/05
Eric S. Nielsen
Florida P. E. No. 41323
Product Technology Corporation
1150 Louisiana Ave., Suite 6
Winter Park, Florida 32789
FBPE Certificate of Authorization NO. 8681

WINDOOR, INC.
1978 STANHOME WAY, ORLANDO, FL.

TITLE: SERIES 8000 SGD SMALL MISSILE ANCHORING DETAILS

PREPARED BY: PTC Product Technology Corporation
Phone 407.622.6334 Fax 407.622.6335

DRN:	BB	DATE:	01/24/04
SCALE:	N.T.S.	DWG. NO:	WIND0077
REV:	A	SHEET:	3 OF 8

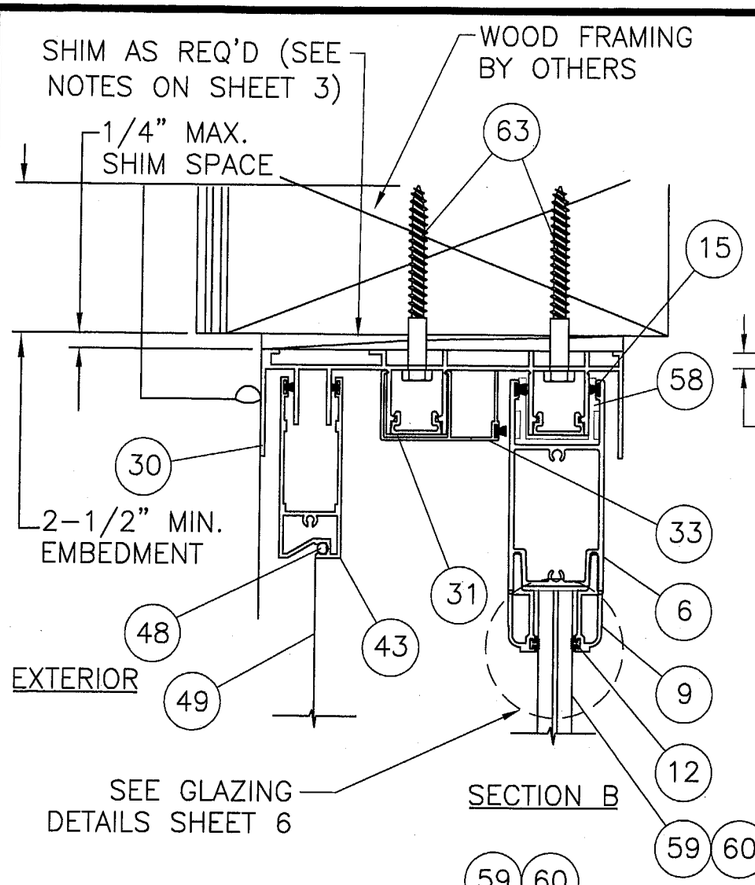

SECTION B

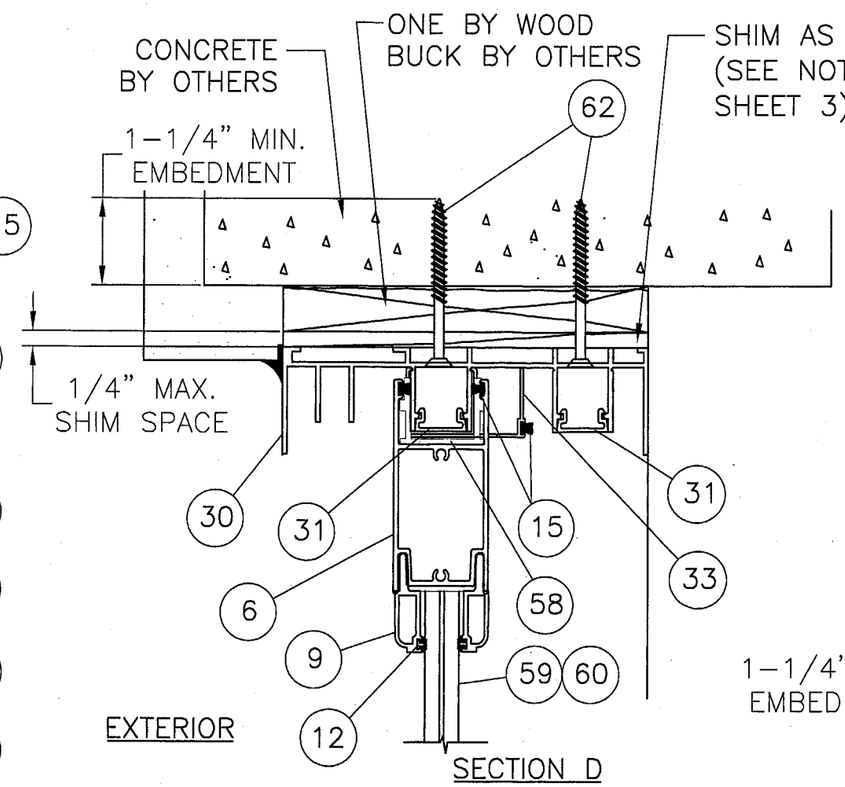

SECTION D

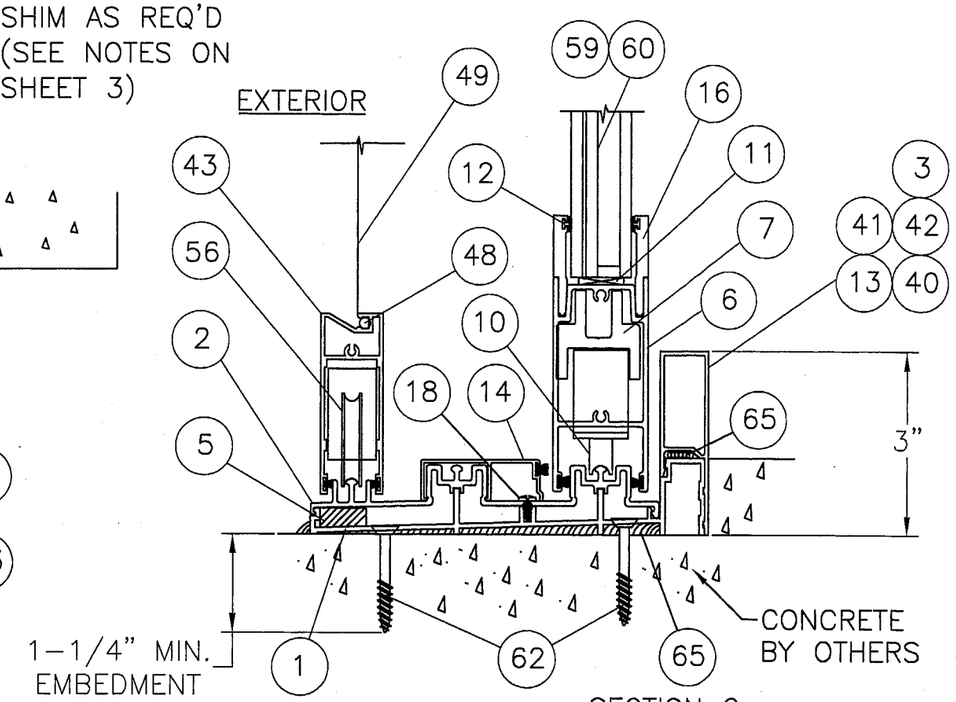

SECTION C
(3" SILL RISER)

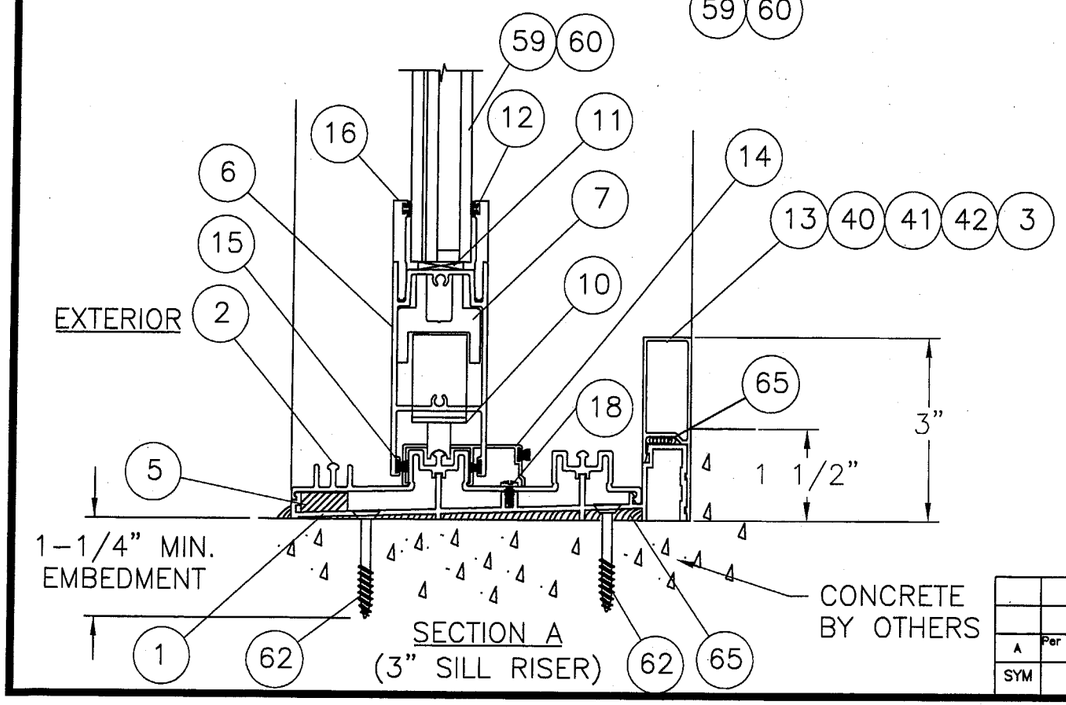

SECTION A
(3" SILL RISER)

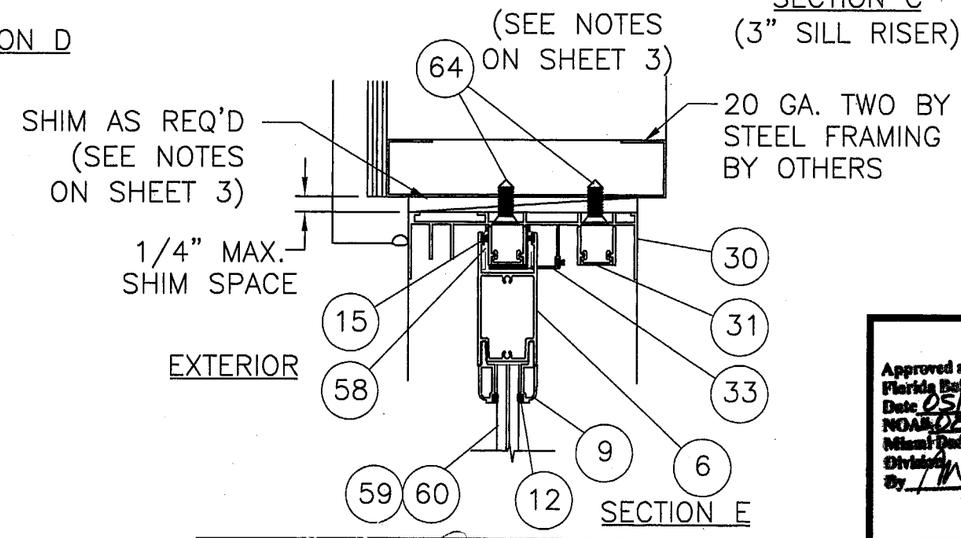

SECTION E

Approved as complying with the Florida Building Code
Date 05/12/05
NOAR 05-1019.01
Miami-Dade Product Control Division
By

SYM	REVISION	DATE	BY
A	Per Dade letter dated 12/03/04	12/21/04	DRL

1/24/05
Eric S. Nielsen
Florida P. E. No. 41323
Product Technology Corporation
1150 Louisiana Ave., Suite 6
Winter Park, Florida 32789
FBPE Certificate of Authorization NO. 8681

WINDOOR, INC.
1978 STANHOME WAY, ORLANDO, FL.

TITLE: SERIES 8000 SGD SMALL MISSILE VERTICAL CROSS SECTIONS

PREPARED BY: PTC Product Technology Corporation
Phone 407.622.6334 Fax 407.622.6335

DRN: BB	DATE: 07/24/04
SCALE: N.T.S.	DWG. NO: WIND0077
REV: A	SHEET: 4 OF 8

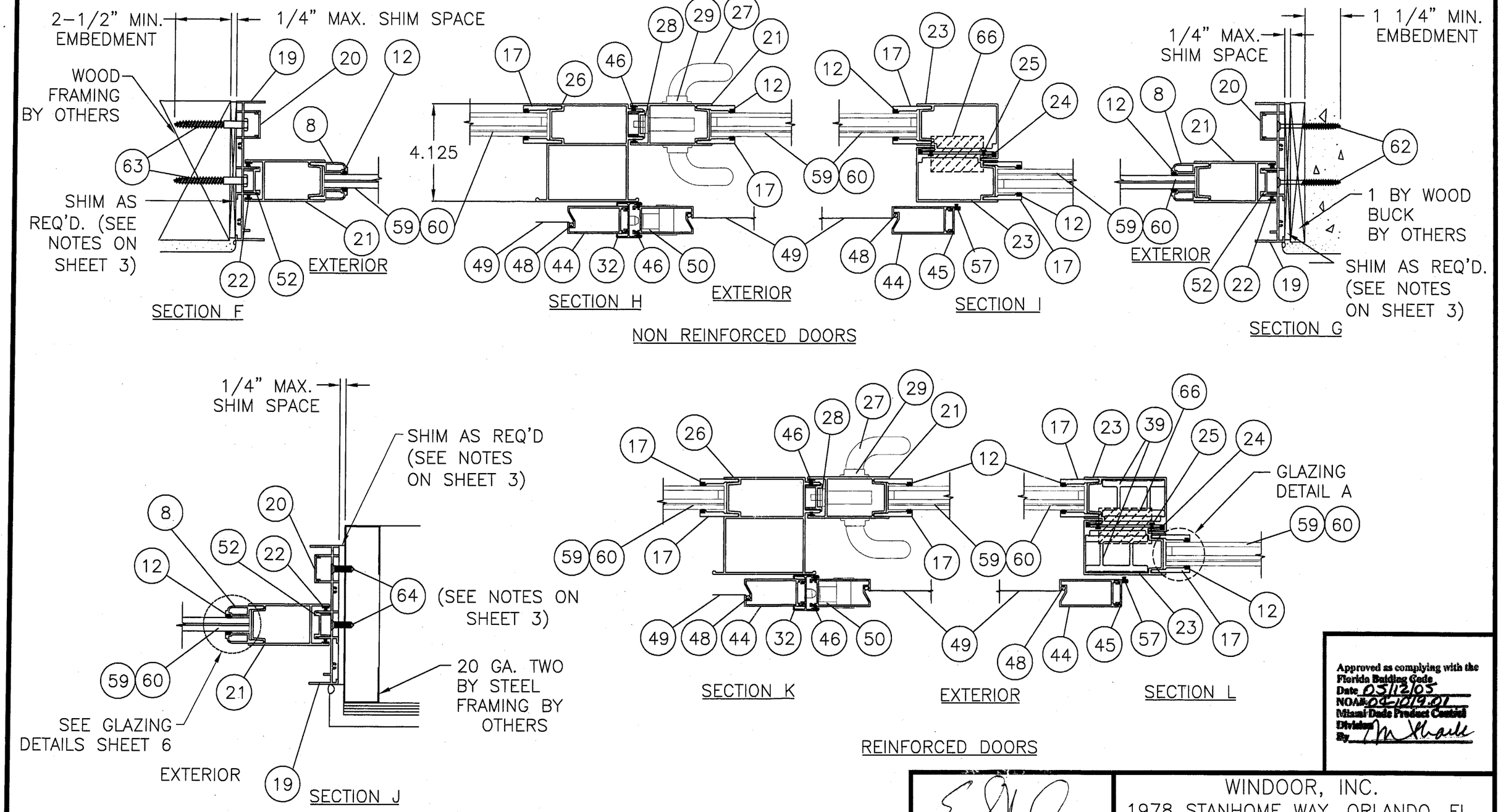

PANEL CONSTRUCTION

EACH PANEL HAS COPED & BUTTED CORNERS. EACH CORNER IS FASTENED TOGETHER WITH TWO #10 X 1 1/4 SS PAN HEAD SCREWS.

SYM	REVISION	DATE	BY
A	Per Dade letter dated 12/03/04	12/21/04	DRL

Approved as complying with the Florida Building Code
Date 05/12/05
NOA# 04-1019.01
Miami-Dade Product Control Division
By

1/24/05
Eric S. Nielsen
Florida P. E. No. 41323
Product Technology Corporation
1150 Louisiana Ave., Suite 6
Winter Park, Florida 32789
FBPE Certificate of Authorization NO. 8681

WINDOOR, INC.
1978 STANHOME WAY, ORLANDO, FL.

TITLE: SERIES 8000 SGD SMALL MISSILE HORIZONTAL CROSS SECTIONS

PREPARED BY: PTC Product Technology Corporation
Phone 407.622.6334 Fax 407.622.6335

DRN:	DATE:
BB	07/24/04
SCALE: N.T.S.	DWG. NO: WIND0077
REV: A	SHEET: 5 OF 8

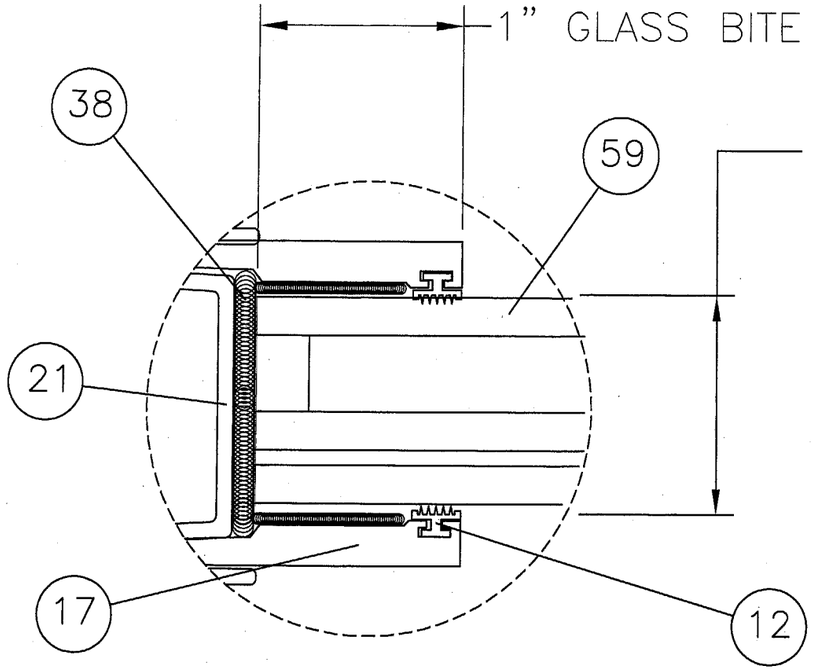

1" INSULATING GLASS O.A.
CONSISTING OF 3/16" TEMPERED (INSIDE LITE);
3/8" AIR SPACE; 7/16" TEMPERED
0.060 PVB (OUTSIDE LITE)

EXTERIOR

GLAZING TYPE A

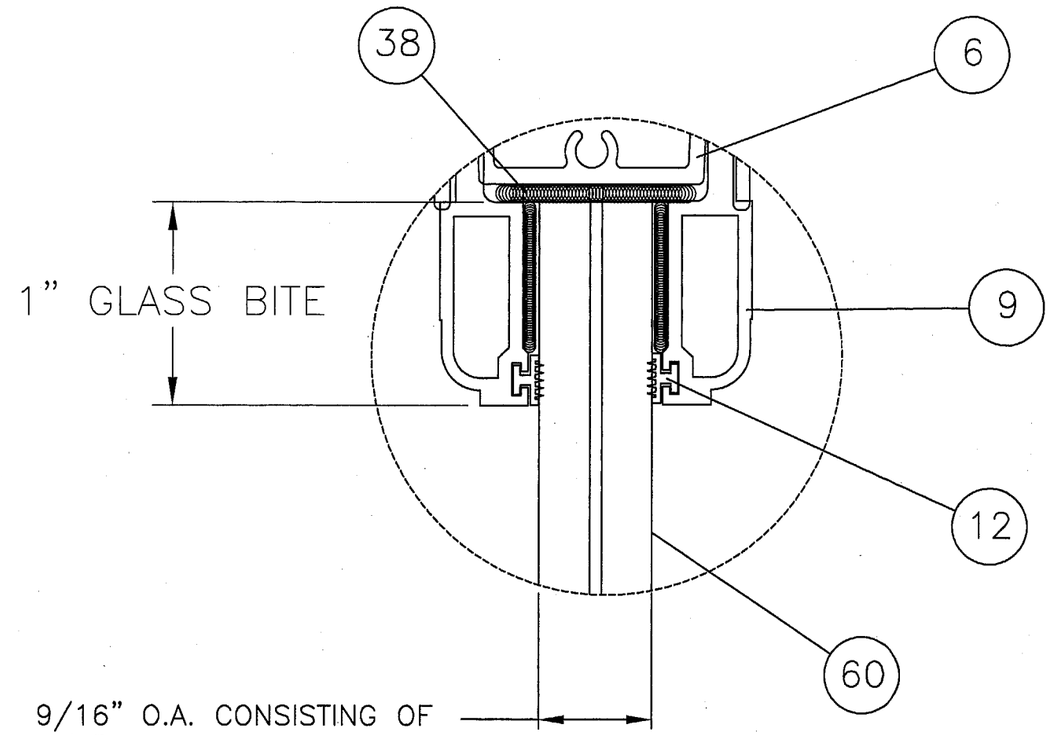

9/16" O.A. CONSISTING OF
1/4" HEAT STRENGTHENED;
0.060 PVB; 1/4" HEAT
STRENGTHENED

GLAZING TYPE B

Approved as complying with the Florida Building Code
Date 05/12/05
NOAA 04-1019.01
Miami-Dade Product Control Division
By M Thall

SYM	REVISION	DATE	BY
A	Per Dade letter dated 12/03/04	12/21/04	DRL

1/24/05
Eric S. Nielsen
Florida P. E. No. 41323
Product Technology Corporation
1150 Louisiana Ave., Suite 6
Winter Park, Florida 32789
FBPE Certificate of Authorization NO. 8681

WINDOOR, INC.
1978 STANHOME WAY, ORLANDO, FL.

TITLE: SERIES 8000 SGD SMALL MISSILE GLAZING DETAILS

PREPARED BY: PTC Product Technology Corporation
Phone 407.622.6334 Fax 407.622.6335

DRN: BB		DATE: 07/24/04	
SCALE: N.T.S.		DWG. NO: WIND0077	
REV: A		SHEET: 6 OF 8	

BILL OF MATERIAL

NO.	PART NO.	DESCRIPTION	
1	FH-01884	2 TRACK FRAME SILL PAN WS/NS BY KEYMARK	EXTRUDED ALUM. A6063-T6
2	FS-01885	2 TRACK FRAME SILL INSERT WS BY KEYMARK	EXTRUDED ALUM. A6063-T6
3	FH-02625	2-1/4" SILL RISER	EXTRUDED ALUM. A6063-T6
4		PANEL ASSY. SCREW #8 X 1/4" PH TYPE FSS	
5	BF04122-1	WEEP HOLE BAFFLE	
6	FH-01869	PANEL TOP & BOTTOM RAIL BY KEYMARK	EXTRUDED ALUM. A6063-T6
7	FS-02643	ROLLER BACK UP BY KEYMARK	EXTRUDED ALUM. A6063-T6
8	FF-01878	9/16" VERTICAL GLASS STOP BY KEYMARK	EXTRUDED ALUM. A6063-T6
9	FH-01877	9/16" HORIZONTAL GLASS STOP BY KEYMARK	EXTRUDED ALUM. A6063-T5
10	1988-9000	TANDEM ROLLER	
11	NSB 3/16-3/4-2	GLASS SETTING BLOCK	
12	TP870	IMPACT GLASS STOP VINYL SEAL	
13	FH-02813	3" SILL RISER BY KEYMARK	EXTRUDED ALUM. A6063-T6
14	FS-02208	FRAME SILL COVER BY KEYMARK	EXTRUDED ALUM. A6063-T6
15	W33351NK000	TOP, BOTTOM RAIL, HEAD & SILL COVER FINSEAL .187 X .350	
16	FS-01879	1" HORIZONTAL GLASS STOP BY KEYMARK	EXTRUDED ALUM. A6063-T6
17	FS-01880	1" VERTICAL GLASS STOP BY KEYMARK	EXTRUDED ALUM. A6063-T6
18		#8 X 1/4 PH SILL PAN SCREW	
19	FS-01845	2 TRACK FRAME JAMB WS/NS BY KEYMARK	EXTRUDED ALUM. A6063-T6
20	FS-01883	FRAME JAMB INSERT BY KEYMARK	EXTRUDED ALUM. A6063-T6
21	FH-01871	PANEL LOCK STILE BY KEYMARK	EXTRUDED ALUM. A6063-T6
22	W32211NK000	LOCK STILE FINSEAL .187 X .220	EXTRUDED ALUM. A6063-T6
23	FH-02491	PANEL INTERLOCK STILE	EXTRUDED ALUM. A6063-T6
24	TP876	INTERLOCK BUMPERS	
25	W33221NK000	INTERLOCK FINSEAL .187 X .220	
26	FH-02165	FEMALE BUTT STILE BY KEYMARK	EXTRUDED ALUM. A6063-T6
27	1414	OLYMPUS HANDLE SET	
28	2468	DUEL POINT MORTISE LOCK W/KEEPER	
29	2470	MORTISE LOCK THUMB TURN	
30	FS-01846	2 TRACK FRAME HEAD WS/NS BY KEYMARK	EXTRUDED ALUM. A6063-T6
31	FS-01882	FRAME HEAD INSERT BY KEYMARK	EXTRUDED ALUM. A6063-T6
32	FS-02650	SCREEN ASTRAGAL BY KEYMARK	EXTRUDED ALUM. A6063-T6
33	FS-02210	FRAME HEAD COVER BY KEYMARK	EXTRUDED ALUM. A6063-T6
34	NRAHP	PANEL HEIGHT ADJUSTMENT HOLE PLUGS	
35		PANEL ASSY. SCREW #10 X 1-1/4" PH TYPE FSS	
36		FRAME ASSY. SCREW #8 X 5/8" PH TYPE FSS	
37		ROLLER INST. SCREW #8 X 5/8" PH TYPE FSS	
38	GLAZING SEALANT	SIKA 552 SEALANT	
39	FH-02641	REINFORCING BAR (FULL LENGTH) BY KEYMARK	EXTRUDED ALUM. A6063-T6
40	FS-02629	1-1/2" SILL RISER BY KEYMARK	EXTRUDED ALUM. A6063-T6
41	FH-02626	3-1/2" SILL RISER BY KEYMARK	EXTRUDED ALUM. A6063-T6
42	FH-02939	4-1/4" SILL RISER BY KEYMARK	EXTRUDED ALUM. A6063-T6
43	FH-02300	SCREEN TOP & BOTTOM RAIL BY KEYMARK	EXTRUDED ALUM. A6063-T6
44	FH-02395	SCREEN STILE BY KEYMARK	EXTRUDED ALUM. A6063-T6
45	FH-02209	SCREEN INTERLOCK SWEEP BY KEYMARK	
46	W13131NK	SCREEN FINSEAL .187 X .130	
47		SCREEN ASSY. SCREW #8 X 5/8 PH TYPE F	

BILL OF MATERIAL

NO.	PART NO.	DESCRIPTION
48	TP-055.175 SSS	SCREEN SPLINE
49		SCREEN CLOTH
50	SGD-205 CH	SCREEN FLUSH LOCK W/KEEPER & SCREWS
51	PCT300 WHYC	SCREEN DUMMY LOCK PULL
52	FS-02726	FRAME JAMB STILE INSERT BY KEYMARK A6063-T6
53	VPP8B	GLAZING TAPE 1/4" X 3/8"
54	NRAHP	PANEL HEIGHT ADJUSTMENT PLUGS
55		SCREEN ROLLER INSTALLATION SCREWS #8 X 3/4 PH TYPE F
56	PJS 7623-09-SS-N	SCREEN ROLLER
57	W23401NK	WEATHER STRIPPING .187 X .400
58	NPG	NYLON PANEL GUIDE
59		1" I.G. TEMP.: W/ 7/16" TEMP.; .060 PVB; W/ 3/8" AIR SPACE; 3/16" TEMP.
60		9/16" O.A.: 1/4" H.S.; .060 PVB SAFLEX, BY SOLUTIA; 1/4" H.S.
61		NOT USED
62		1/4" DIA. ITW BUILDEX TAPCON W/1 1/4" MIN. EMB.
63		5/16" LAG BOLT W/ 2 1/2" MIN. EMB.
64		1/4" DIAMETER SELF TAPPING TEK SCREW
65		SILICONE CAULK
66	P7569AM	.75" HIGH X 1.5" X 2.25" DUAL FINNED DUST PAD

Approved as complying with the Florida Building Code
Date 05/12/05
NOA# 04-1019.01
Miami-Dade Product Control Division
By M Shall

SYM	REVISION	DATE	BY
A	Per Dade letter dated 12/03/04	12/21/04	DRL

1/24/05
Eric S. Nielsen
Florida P. E. No. 41323
Product Technology Corporation
1150 Louisiana Ave., Suite 6
Winter Park, Florida 32789
FBPE Certificate of Authorization NO. 8681

WINDOOR, INC.
1978 STANHOME WAY, ORLANDO, FL.

TITLE: SERIES 8000 SGD SMALL MISSILE BILL OF MATERIALS

PREPARED BY: PTC Product Technology Corporation
Phone 407.622.6334 Fax 407.622.6335

DRN:	DATE:
BB	07/24/04
SCALE: N.T.S.	DWG. NO: WIND0077
REV: A	SHEET: 7 OF 8

(1) TWO TRACK SILL PAN
TYP. WALL THICKNESS 0.080

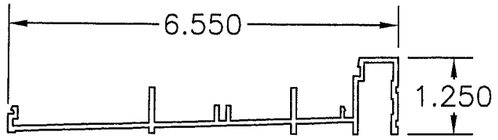

(2) TWO TRACK SILL INSERT
TYP. WALL THICKNESS 0.075

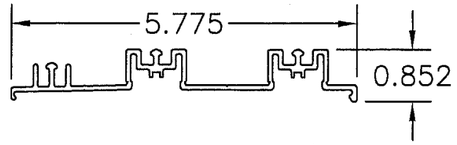

(3) 2-1/4" SILL RISER
TYP. WALL
THICKNESS 0.060

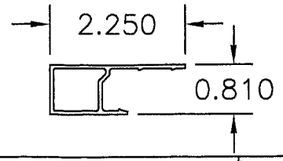

(6) PANEL TOP & BOTTOM RAIL
TYP. WALL THICKNESS 0.080

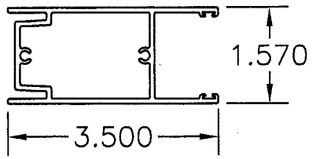

(7) ROLL BACK UP
TYP. WALL
THICKNESS 0.175

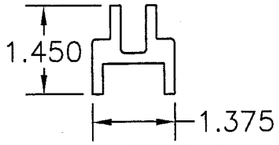

(8) 9/16" VERT.
GLASS STOP

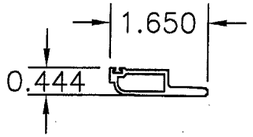

(9) 9/16"
HORIZONTAL
GLASS STOP

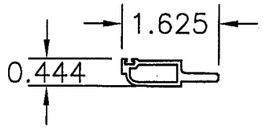

(13) 3" SILL RISER TYP.
WALL THICKNESS 0.060

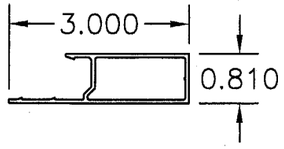

(14) FRAME SILL COVER TYP.
WALL THICKNESS 0.050

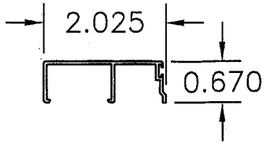

(16) 1" HORIZONTAL
GLASS STOP

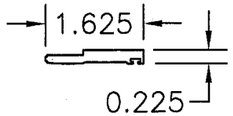

(17) 1" VERTICAL
GLASS STOP

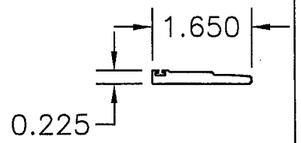

(20) FRAME JAMB INSERT
TYP. WALL
THICKNESS 0.060

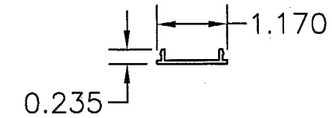

(19) TWO TRACK FRAME JAMB
TYP. WALL THICKNESS 0.075

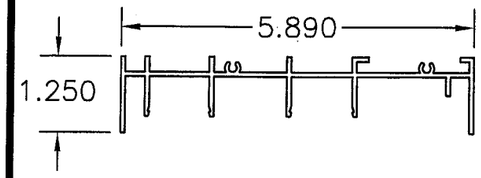

(21) PANEL LOCK STILE TYP.
WALL THICKNESS 0.080

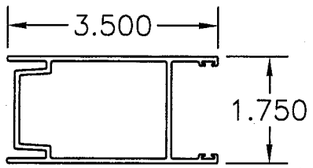

(23) PANEL INTERLOCK TYP.
WALL THICKNESS 0.080

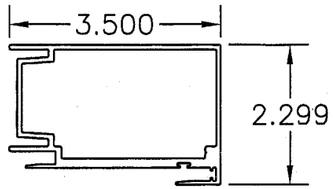

(30) TWO TRACK FRAME HEAD
TYP. WALL THICKNESS 0.075

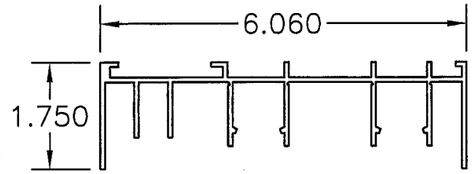

(26) FEMALE BUTT STILE
TYP. WALL
THICKNESS 0.080

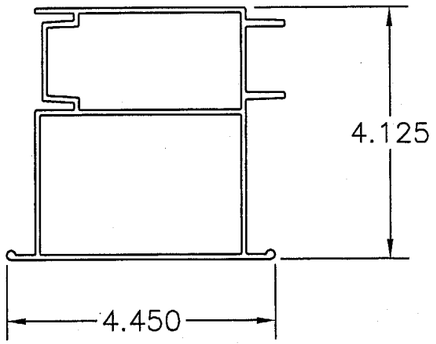

(31) FRAME HEAD INSERT
TYP. WALL
THICKNESS 0.060

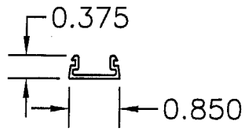

(32) SCREEN ASTRAGAL
TYP. WALL
THICKNESS 0.050

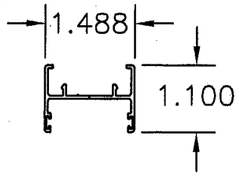

(33) FRAME HEAD COVER
TYP. WALL
THICKNESS 0.050

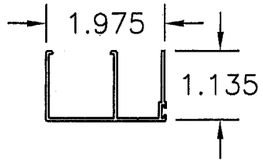

(39) REINFORCEMENT BAR
TYP. WALL
THICKNESS 0.250

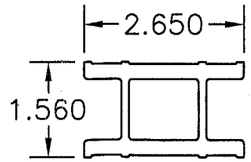

(40) 1-1/2" SILL
RISER TYP. WALL
THICKNESS 0.060

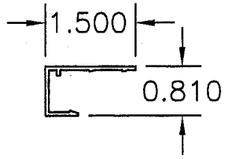

(41) 3 1/2" SILL RISER
TYP. WALL
THICKNESS 0.060

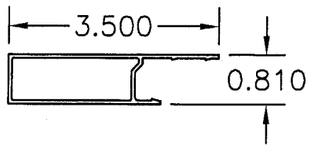

(42) 4 1/4" SILL RISER
TYP. WALL
THICKNESS 0.060

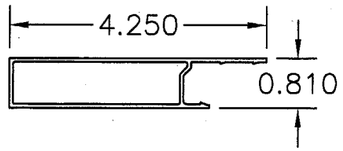

(43) SCREEN BOTTOM
RAIL TYP. WALL
THICKNESS 0.064

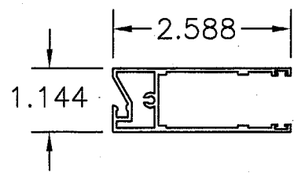

(44) SCREEN STILE
TYP. WALL
THICKNESS 0.062

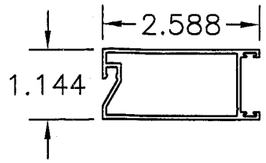

(45) SCREEN INTERLOCK SWEEP TYP.
WALL THICKNESS 0.060

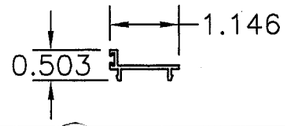

Approved as complying with the
Florida Building Code
Date 05/12/05
NOA# 04-1019.01
Miami-Dade Product Control
Division
By

(52) FRAME STILE JAMB
INSERT TYP. WALL
THICKNESS 0.060

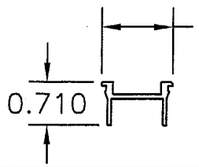

SYM	REVISION	DATE	BY
A	Per Dade letter dated 12/03/04	12/21/04	DRL

1/24/05
Eric S. Nielsen
Florida P. E. No. 41323
Product Technology Corporation
1150 Louisiana Ave., Suite 6
Winter Park, Florida 32789
FBPE Certificate of Authorization NO. 8681

WINDOOR, INC.
1978 STANHOME WAY, ORLANDO, FL.

TITLE: SERIES 8000 SGD SMALL MISSILE COMPONENTS

PREPARED BY: PTC Product Technology Corporation
Phone 407.622.6334 Fax 407.622.6335

DRN:	BB	DATE:	07/24/04
SCALE:	N.T.S	DWG. NO:	WIND0077
REV:	A	SHEET:	8 OF 8