MIAMI-DADE

BUILDING CODE COMPLIANCE OFFICE (BCCO)
PRODUCT CONTROL DIVISION

MIAMI-DADE COUNTY, FLORIDA
METRO-DADE FLAGLER BUILDING
140 WEST FLAGLER STREET, SUITE 1603
MIAMI, FLORIDA 33130-1563
(305) 375-2901 FAX (305) 375-2908

NOTICE OF ACCEPTANCE (NOA)

J. B. S. Trade Corporation
13818 S.W. 139th Court
Miami, Florida 33186

SCOPE:
This NOA is being issued under the applicable rules and regulations governing the use of construction materials. The documentation submitted has been reviewed by Miami-Dade County Product Control Division and accepted by the Board of Rules and Appeals (BORA) to be used in Miami Dade County and other areas where allowed by the Authority Having Jurisdiction (AHJ).

This NOA shall not be valid after the expiration date stated below. The Miami-Dade County Product Control Division (In Miami Dade County) and/or the AHJ (in areas other than Miami Dade County) reserve the right to have this product or material tested for quality assurance purposes. If this product or material fails to perform in the accepted manner, the manufacturer will incur the expense of such testing and the AHJ may immediately revoke, modify, or suspend the use of such product or material within their jurisdiction. BORA reserves the right to revoke this acceptance, if it is determined by Miami-Dade County Product Control Division that this product or material fails to meet the requirements of the applicable building code.

This product is approved as described herein, and has been designed to comply with the High Velocity Hurricane Zone of the Florida Building Code.

DESCRIPTION: HT-100 / Aluminum Accordion Shutter

APPROVAL DOCUMENT: Drawing No. 05-335, titled "HT-100 Aluminum Accordion Shutter", sheets 1 through 7 of 7, prepared by Thornton-Tomasetti Group, dated 10/17/02, last revision #2 dated 12/20/2004, signed and sealed by V. J. Knezevich, P.E., bearing the Miami-Dade County Product Control Approval stamp with the Notice of Acceptance number and approval date by the Miami-Dade County Product Control Division.

MISSILE IMPACT RATING: Large and Small Missile Impact

LABELING: Each unit shall bear a permanent label with the manufacturer's name or logo, city, state and the following statement: "Miami-Dade County Product Control Approved", unless otherwise noted herein.

RENEWAL of this NOA shall be considered after a renewal application has been filed and there has been no change in the applicable building code negatively affecting the performance of this product.

TERMINATION of this NOA will occur after the expiration date or if there has been a revision or change in the materials, use, and/or manufacture of the product or process. Misuse of this NOA as an endorsement of any product, for sales, advertising or any other purposes shall automatically terminate this NOA. Failure to comply with any section of this NOA shall be cause for termination and removal of NOA.

ADVERTISEMENT: The NOA number preceded by the words Miami-Dade County, Florida, and followed by the expiration date may be displayed in advertising literature. If any portion of the NOA is displayed, then it shall be done in its entirety.

INSPECTION: A copy of this entire NOA shall be provided to the user by the manufacturer or its distributors and shall be available for inspection at the job site at the request of the Building Official.

This NOA consists of this page 1, evidence submitted page(s) as well as approval document mentioned above. The submitted documentation was reviewed by **Helmy A. Makar, P.E.**

Helmy A. Makar
05/19/2005

PRODUCT CONTROL ACCEPTED

NOA No 05-0411.03
Expiration Date: 05/19/2010
Approval Date: 05/19/2005

J. B. S. Trade Corporation

NOTICE OF ACCEPTANCE: EVIDENCE SUBMITTED

A. DRAWINGS

1. *Drawing No. 05-335, titled "HT-100 Aluminum Accordion Shutter", sheets 1 through 7 of 7, prepared by Thornton-Tomasetti Group, dated 10/17/02, last revision #2 dated 12/20/2004, signed and sealed by V. J. Knezevich, P.E.,*

B. TESTS

1. *See Association's generic approval under 02-0799.*

C. CALCULATIONS

1. *See Association's generic approval under 02-0799.*

D. QUALITY ASSURANCE

1. *By Miami-Dade County Building Code Compliance Office.*

E. MATERIAL CERTIFICATIONS

1. *See Association's generic approval under 02-0799.*

F. STATEMENTS

1. *Statement letter of conformance by Thornton-Tomasetti Group, dated April 4, 2005, signed and sealed by V. J. Knezevich, P.E.*

Helmy A. Makar, P. E.
Product Control Examiner
NOA No 05-0411.03
Expiration Date: 05/19/2010
Approval Date: 05/19/2005

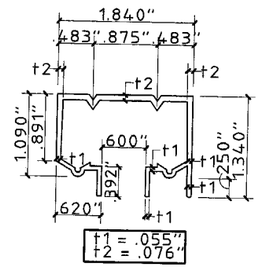

1 HEADER-CLG. MOUNTED
SCALE: HALF SIZE

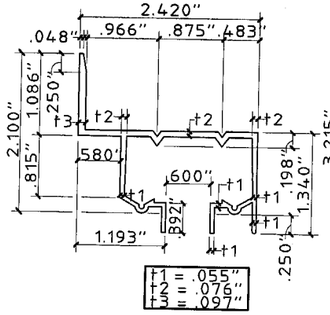

2 HEADER-WALL MOUNTED
SCALE: HALF SIZE

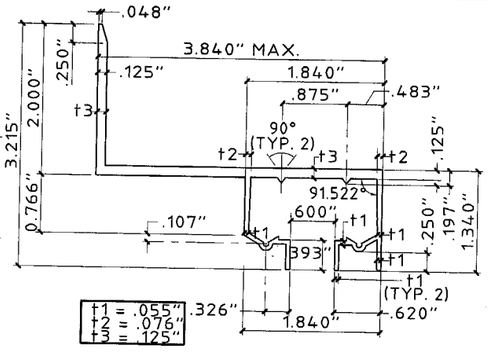

2a BUILD-OUT WALL HEADER
SCALE: HALF SIZE

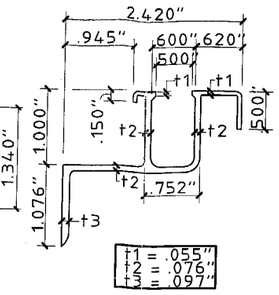

3 SILL-WALL MOUNTED
SCALE: HALF SIZE

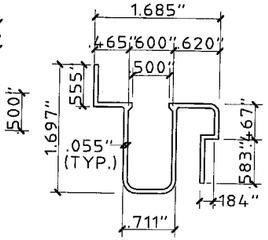

4 ADJ. SILL-TOP
SCALE: HALF SIZE

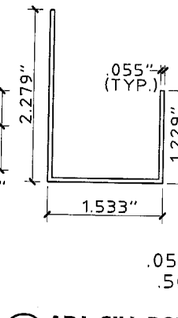

5 ADJ. SILL-BOT.
SCALE: HALF SIZE

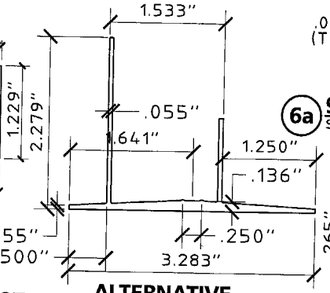

5a ALTERNATIVE ADJ. SILL-BOT.
SCALE: HALF SIZE

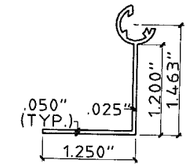

6a 90° END SLAT
SCALE: HALF SIZE

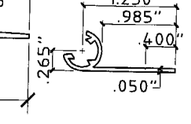

7 FLAT END SLAT
SCALE: HALF SIZE

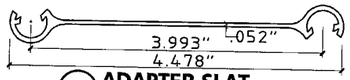

8a ADAPTER SLAT
SCALE: HALF SIZE

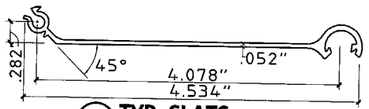

8 TYP. SLATS
SCALE: HALF SIZE

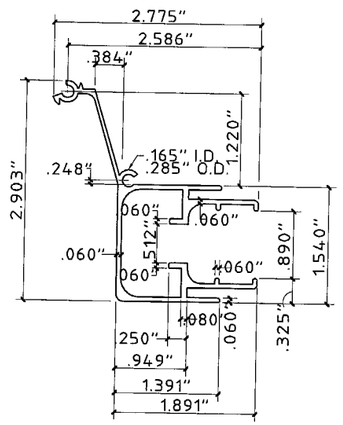

9 CENTER MATE 1
SCALE: HALF SIZE

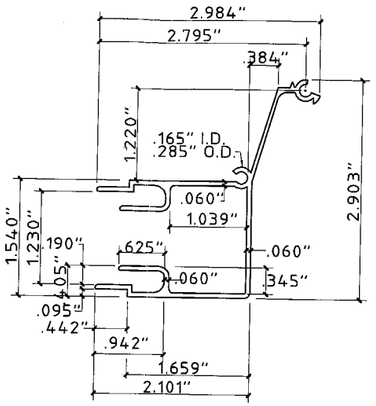

10 CENTER MATE 2
SCALE: HALF SIZE

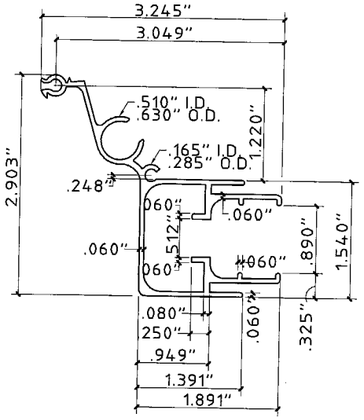

9a CENTER MATE 1 (W/ LOCKING ROD)
SCALE: HALF SIZE

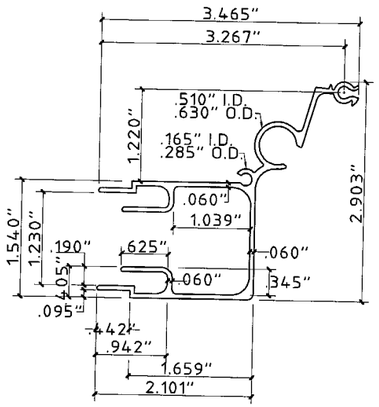

10a CENTER MATE 2 (W/ LOCKING ROD)
SCALE: HALF SIZE

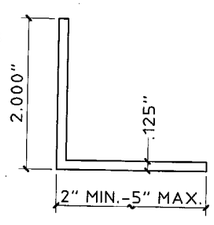

11 ANGLE
SCALE: HALF SIZE

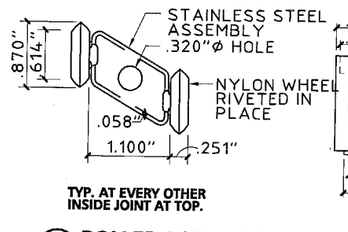

12 ROLLER ASSEMBLY
SCALE: HALF SIZE

12a BUSHINGS
SCALE: FULL SIZE

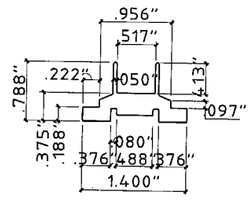

13 INSERT
SCALE: HALF SIZE

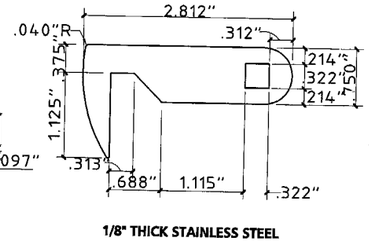

14 LOCKING ARM
SCALE: HALF SIZE

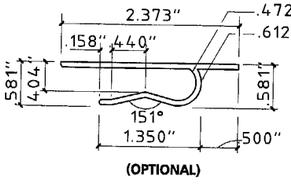

15 LOCKING CLIP
SCALE: HALF SIZE

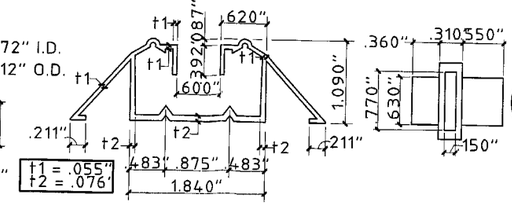

16 WALKOVER SILL FLOOR MOUNTED
SCALE: HALF SIZE

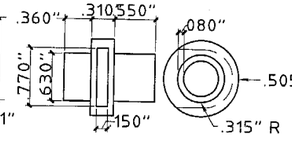

17 LOCKING ARM ALIGNMENT BUSHING (NYLON)
SCALE: HALF SIZE

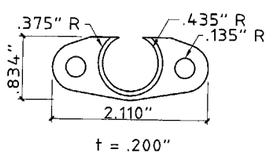

18 INSIDE HANDLE SHIM (NYLON)
SCALE: HALF SIZE

GENERAL NOTES:

1. THESE APPROVAL DOCUMENTS REPRESENT A SHUTTER SYSTEM ANALYZED WITH THE PROVISION SET FOR THE ISSUANCE OF A NOTICE OF ACCEPTANCE (NOA) BY MIAMI-DADE COUNTY PRODUCT CONTROL DIVISION FOR THE FLORIDA BUILDING CODE, 2001 WITH 2002 AND 2003 REVISIONS.
2. TO VERIFY THAT THE ANCHORS AS TESTED, ARE NOT OVERSTRESSED IN THESE APPROVAL DOCUMENTS, NO INCREASE IN ALLOWABLE STRESS WAS USED IN THE FASTENER ANALYSIS.
3. DETERMINE THE POSITIVE AND NEGATIVE DESIGN LOADS TO USE WHEN REFERENCING THESE DOCUMENTS IN ACCORDANCE WITH THE GOVERNING CODE AND GOVERNING WIND VELOCITY. FOR WIND LOAD CALCULATIONS IN ACCORDANCE WITH THE FLORIDA BUILDING CODE 2001 WITH 2002 AND 2003 REVISIONS A DIRECTIONALITY FACTOR OF Kd =0.85 SHALL BE USED.
4. THESE APPROVAL DOCUMENTS ARE GENERIC AND DO NOT INCLUDE INFORMATION FOR SITE-SPECIFIC APPLICATION OF THIS SHUTTER SYSTEM.
5. USE OF THESE APPROVAL DOCUMENTS SHALL COMPLY WITH CHAPTER 61G15-23 OF THE FLORIDA ADMINISTRATIVE CODE.
6. THESE APPROVAL DOCUMENTS ARE SUITABLE TO BE APPLIED BY THE CONTRACTOR PROVIDED THE CONTRACTOR DOES NOT DEVIATE FROM THE CONDITIONS DETAILED HEREIN AND THE CONTRACTOR VERIFIES THAT THE EXISTING STRUCTURE DOES NOT DEVIATE IN EITHER FORM OR MATERIAL FROM THE STRUCTURAL SUBSTRATES DETAILED HEREIN.
7. ANY MODIFICATIONS OR ADDITIONS TO THESE APPROVAL DOCUMENTS WILL VOID THE APPROVAL DOCUMENTS.
8. WHEN THE SITE CONDITIONS DEVIATE FROM THESE APPROVAL DOCUMENTS, THE BUILDING OFFICIAL MAY ELECT ONE OF THE FOLLOWING OPTIONS:
   A) REQUIRE THAT SITE SPECIFIC DOCUMENTS BE PREPARED, SIGNED, DATED AND SEALED BY A LICENSED ENGINEER OR REGISTERED ARCHITECT, WHICH DETAIL AND JUSTIFY THE DEVIATION. SAID DOCUMENTS SHALL BE SUBMITTED TO THE PRODUCT ENGINEER FOR REVIEW AS A CONDITION TO THE BUILDING OFFICIAL GRANTING HIS/HER APPROVAL.
   B) REQUIRE THAT A ONE-TIME SITE SPECIFIC APPROVAL BE APPLIED FOR AND SECURED FROM THE MIAMI-DADE COUNTY PRODUCT CONTROL DIVISION.

   WHEN THE SITE CONDITION DEVIATIONS OCCUR WITHIN THE HIGH VELOCITY HURRICANE ZONE AREAS, ONLY OPTION "B" SHALL BE ACCEPTED BY THE BUILDING OFFICIAL.
9. EACH SHUTTER ASSEMBLY SHALL BE PERMANENTLY LABELED AS FOLLOWS:

   J.B.S. TRADE CORP.
   MIAMI, FLORIDA
   MIAMI-DADE COUNTY PRODUCT APPROVED
10. ALL SHUTTERS SHALL HAVE A LOCKING MECHANISM AT CENTER OR SIDE CLOSURE WITHIN 18" OF CENTER (VERT.). LOCKING MECHANISM SHALL BE LOCKED TO PROVIDE HURRICANE PROTECTION.
11. STORM SHUTTER EXTRUSIONS SHOWN SHALL BE 6063-T6 ALUMINUM ALLOY, U.O.N.
12. ALL SCREWS AND BOLTS TO BE 2024-T4 ALUMINUM ALLOY, STAINLESS STEEL, OR GALVANIZED STEEL WITH A MINIMUM TENSILE STRENGTH OF 60 K.S.I., U.O.N. POP RIVETS TO BE 3/16"Ø, 5052 ALUM. ALLOY, U.O.N.
13. TOP AND BOTTOM DETAILS MAY BE INTERCHANGED AS FIELD CONDITIONS REQUIRE.
14. FLOOR TRACKS MAY BE REMOVABLE AT NON-STACKING LOCATIONS. USE REMOVABLE ANCHORS SUCH AS POWERS CALK-IN ANCHORS.
15. THIS SHUTTER SYSTEM IS PATENTED WITH THE U.S. PATENT AND TRADEMARK OFFICE, PATENT No. 5,755,270.

Approved as complying with the Florida Buiding Code
Date 05/19/2005
NOA# 05-0411.03
Miami Dade Product Control Division
By [signature]

Thornton-Tomasetti Group
330 N. Andrews Ave., Suite 450 • Ft. Lauderdale, FL 33301
Tel. (954) 522-3690 • Fax (954) 522-3691 • COA # 7519
Website: www.TheTTGroup.com

Copyright © 2005 Thornton-Tomasetti Group, Inc.
HT100 LICENSED BY HI-TECH SHUTTER GROUP, INC.

HT-100 ALUMINUM ACCORDION SHUTTER

J.B.S. TRADE CORP.
13818 S.W. 139TH COURT
MIAMI, FL 33186
PHONE: 305-228-6198
FAX: 305-228-6198

V.J. Knezevich
Professional Engineer
FL License No.: PE 0010983
MAR 29 2005

revisions			
no	date	by	description
1	12/04/02	VJK	COUNTY COMMENTS
2	12/26/04	VJK	DETAIL G ANCHOR TYPE

HTSG I.D. # 05032902458D

date	10/17/2002
scale	AS NOTED
drawn by	MCR
design by	VJK
checked by	VJK
drawing no.	05-335
sheet	1 of 7

Print Information: \\hurricane\ka\Cadd\Associations\Hi-Tech\JBS_Trade\05-335\R2-sub\05-335-01.dwg MCantu 03/29/2005 01:30:24pm 03/29/05 13:16

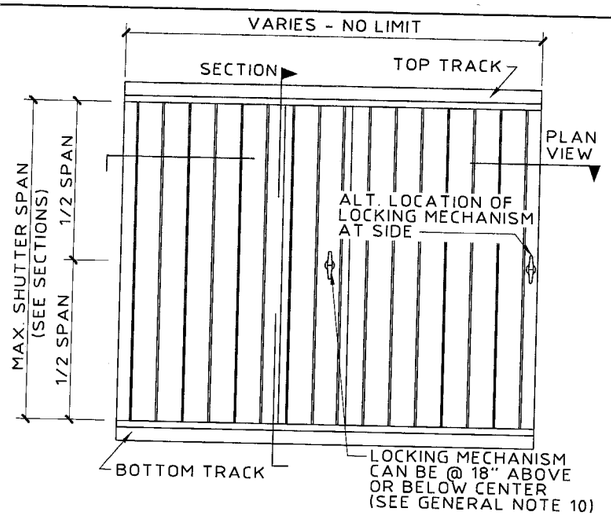

TYPICAL ELEVATION
N.T.S.

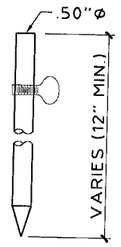

USED WITH PIECES (9a) AND (10a)

LOCKING PIN
SCALE: 1-1/2" = 1'-0"

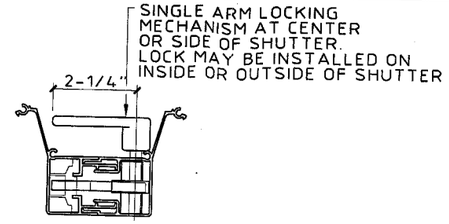

SINGLE ARM LOCK
N.T.S.

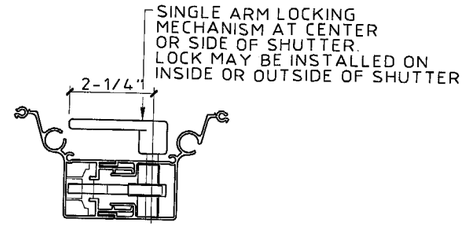

SINGLE ARM LOCK
N.T.S.

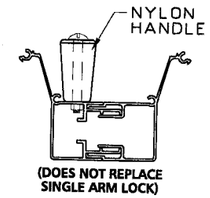

OPTIONAL CLOSER HANDLE
N.T.S.

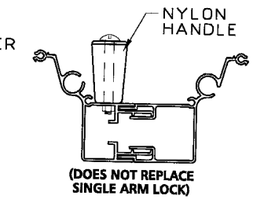

OPTIONAL CLOSER HANDLE
N.T.S.

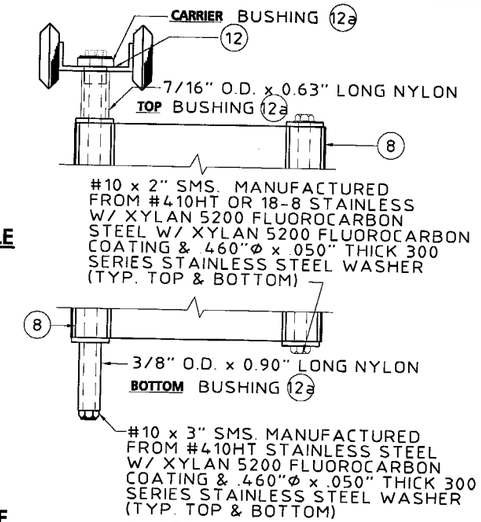

SCREW BUSHING & ROLLER/ BUSHING ASSEMBLY
SCALE: HALF SIZE

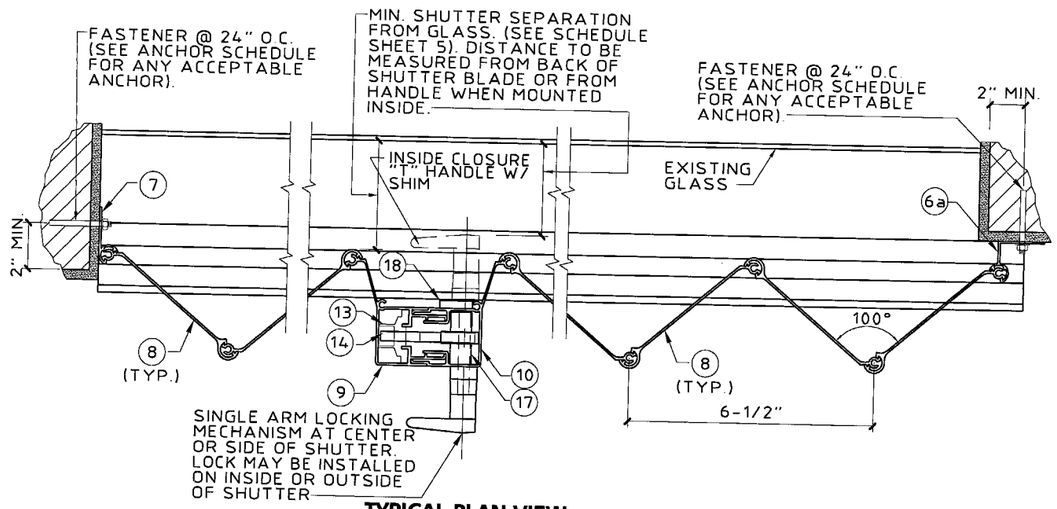

TYPICAL PLAN VIEW
SCALE: 3" = 1'-0"

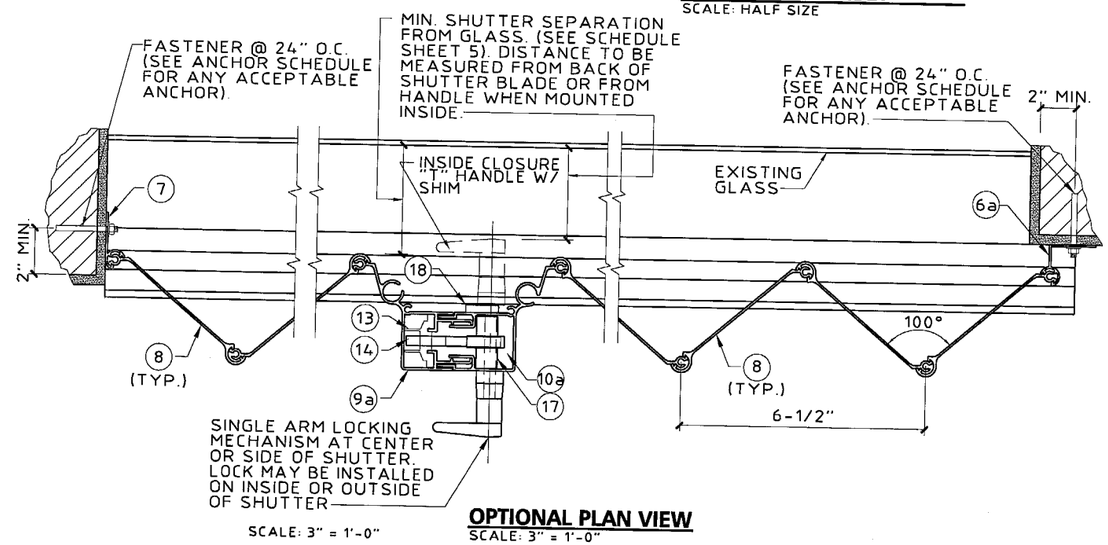

SCALE: 3" = 1'-0"

OPTIONAL PLAN VIEW
SCALE: 3" = 1'-0"

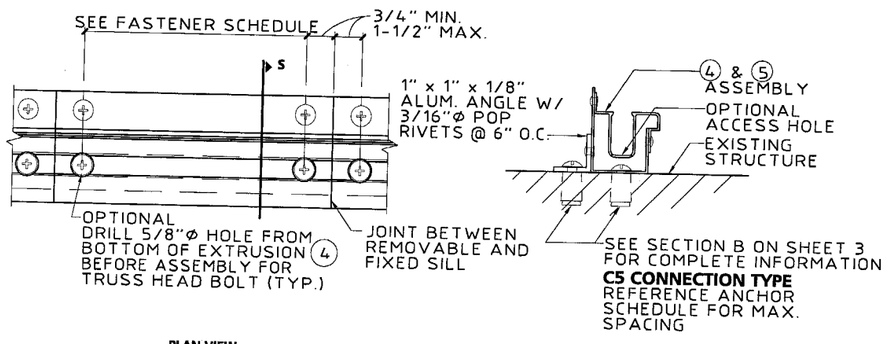

PLAN VIEW

SECTION S

REMOVABLE FLOOR TRACK DETAIL
SCALE : 3"= 1'- 0"

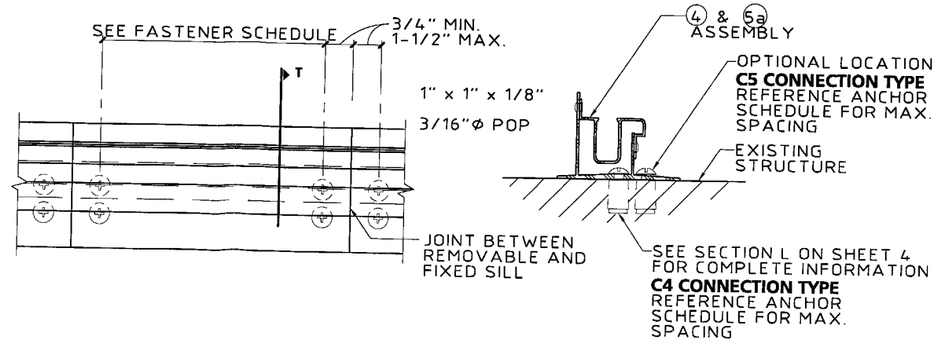

PLAN VIEW

SECTION T

OPTIONAL REMOVABLE FLOOR TRACK DETAIL
SCALE : 3"= 1'- 0"

Approved as complying with the Florida Buiding Code
Date 05/19/2005
NOA# 05-0411.03
Miami Dade Product Control Division
By Helmy A. Mahr

Thornton-Tomasetti Group
330 N. Andrews Ave., Suite 450 • Ft. Lauderdale, FL 33301
Tel. (954) 522-3690 • Fax (954) 522-3691 • COA # 7519
Website: www.TheTTGroup.com

Copyright © 2005 Thornton-Tomasetti Group, Inc.
HT100 LICENSED BY HI-TECH SHUTTER GROUP, INC.

HT-100 ALUMINUM ACCORDION SHUTTER

J.B.S. TRADE CORP.
13818 S.W. 139TH COURT
MIAMI, FL 33186
PHONE: 305-228-6198
FAX: 305-228-6198

V.J. Knezevich
Professional Engineer
FL License No.: PE 0010983
MAR 29 2005

revisions

no	date	by	description
1	12/04/02	VJK	COUNTY COMMENTS
2	12/20/04	VJK	DETAIL G ANCHOR TYPE

HTSG I.D. # 05032902458D

date 10/17/2002
scale AS NOTED
drawn by MCR
design by VJK
checked by VJK
drawing no. 05-335
sheet 2 of 7

Print Information: \\hurricane\ka\Cadd\Associations\Hi-Tech\JBS_Trade\05-335\R2-sub\05-335-02.dwg MCantu 03/29/2005 01:30:32pm 03/29/05 13:16

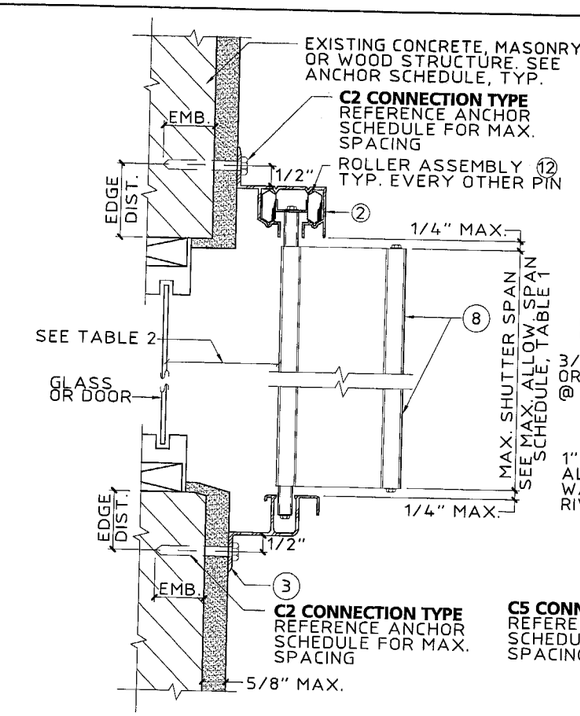

(A) WALL MOUNT SECTION
SCALE: 3" = 1'-0"

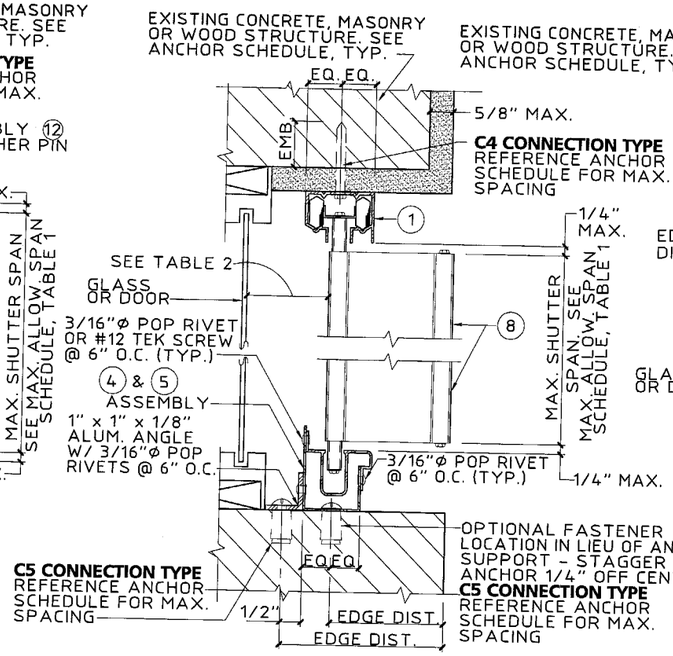

(B) CEILING/INSIDE MOUNT SECTION
SCALE: 3" = 1'-0"

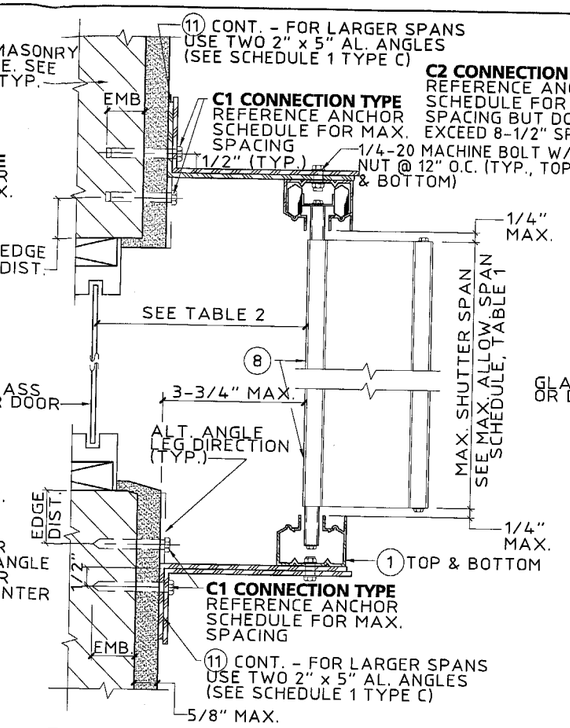

(C) BUILD-OUT MOUNT SECTION
SCALE: 3" = 1'-0"

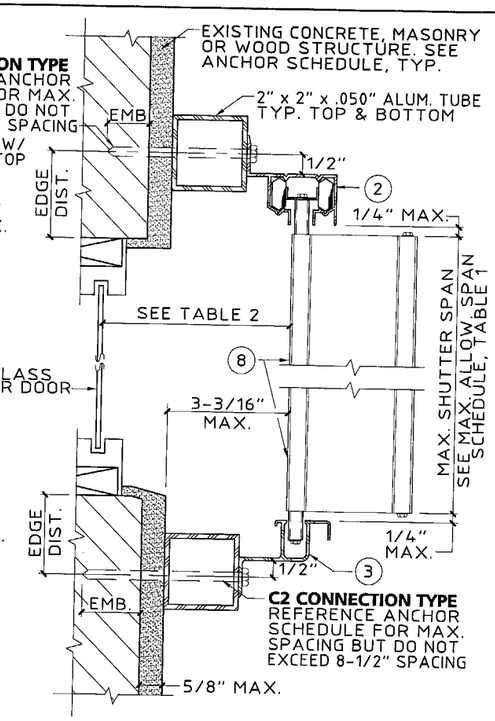

(D) BUILD-OUT MOUNT SECTION
SCALE: 3" = 1'-0"

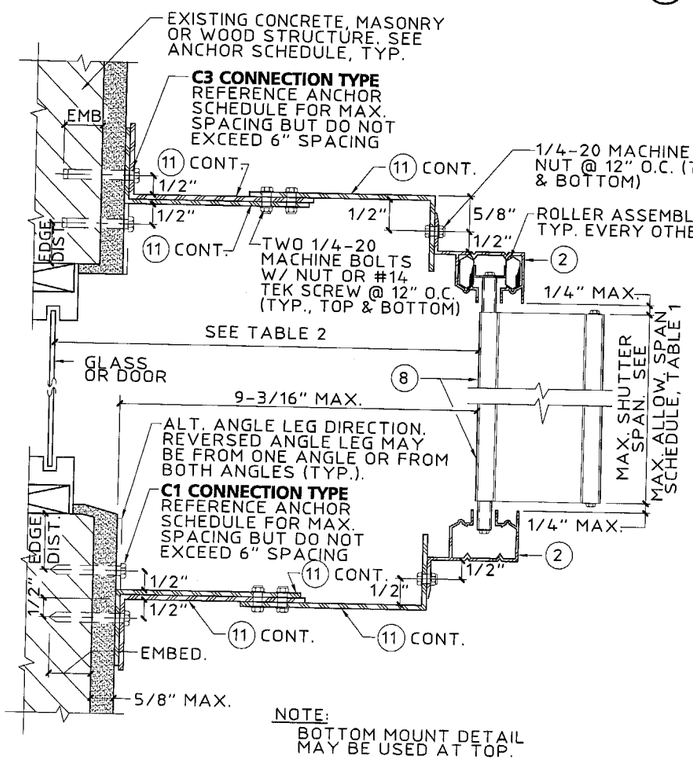

NOTE:
BOTTOM MOUNT DETAIL MAY BE USED AT TOP.

(E) BUILD-OUT MOUNT SECTION
SCALE: 3" = 1'-0"

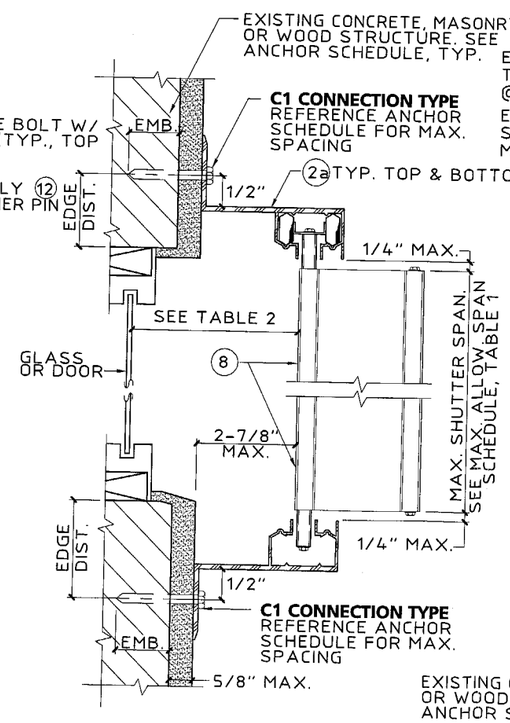

(F) BUILD-OUT MOUNT SECTION
SCALE: 3" = 1'-0"

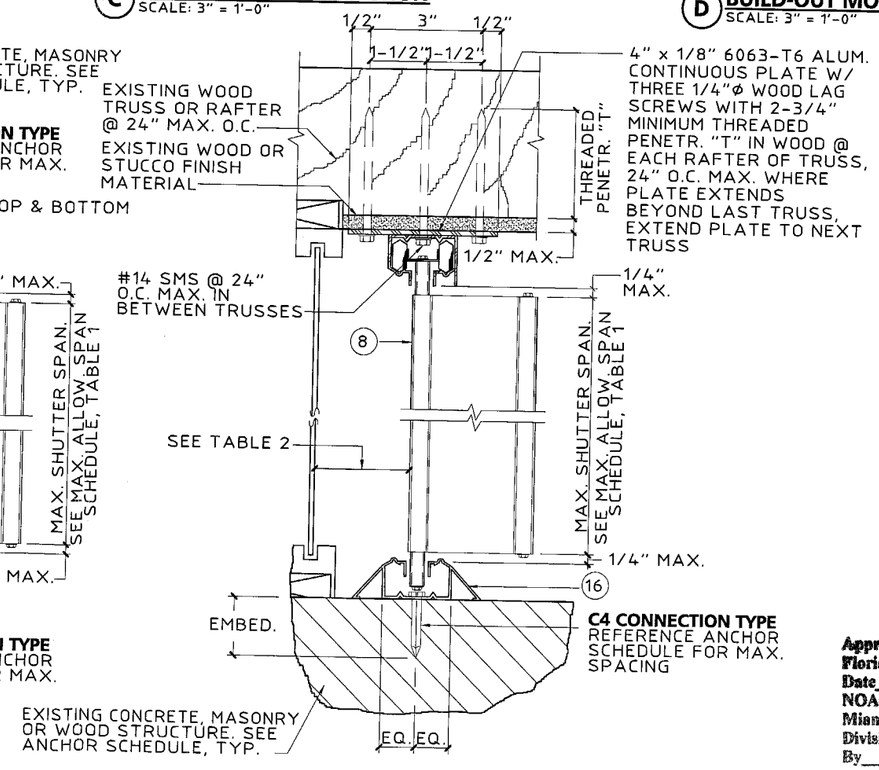

(G) WOOD SOFFIT / FLOOR MOUNT SECTION
SCALE: 3" = 1'-0"

Approved as complying with the Florida Buiding Code
Date 05/19/2005
NOA# 05-0411.03
Miami Dade Product Control Division
By Helmy A. Mohr

Thornton-Tomasetti Group
330 N. Andrews Ave., Suite 450 • Ft. Lauderdale, FL 33301
Tel. (954) 522-3690 • Fax (954) 522-3691 • COA # 7519
Website: www.TheTTGroup.com

Copyright © 2005 Thornton-Tomasetti Group, Inc.
HT100 LICENSED BY HI-TECH SHUTTER GROUP, INC.

HT-100 ALUMINUM ACCORDION SHUTTER

J.B.S. TRADE CORP.
13818 S.W. 139TH COURT
MIAMI, FL 33186
PHONE: 305-228-6198
FAX: 305-228-6198

V.J. Knezevich
Professional Engineer
FL License No.: PE 0010983
MAR 29 2005

revisions

no	date	by	description
1	12/04/02	VJK	COUNTY COMMENTS
2	12/20/04	VJK	DETAIL G ANCHOR TYPE

HTSG I.D. # 05032902458D

date 10/17/2002	
scale AS NOTED	drawn by MCR
design by VJK	checked by VJK
drawing no. 05-335	
sheet 3 of 7	

Print Information: \\hurricane\ka\Cadd\Associations\Hi-Tech\JBS_Trade\05-335\R2-sub\05-335-03.dwg MCantu 03/29/2005 01:30:40pm 03/29/05 13:16

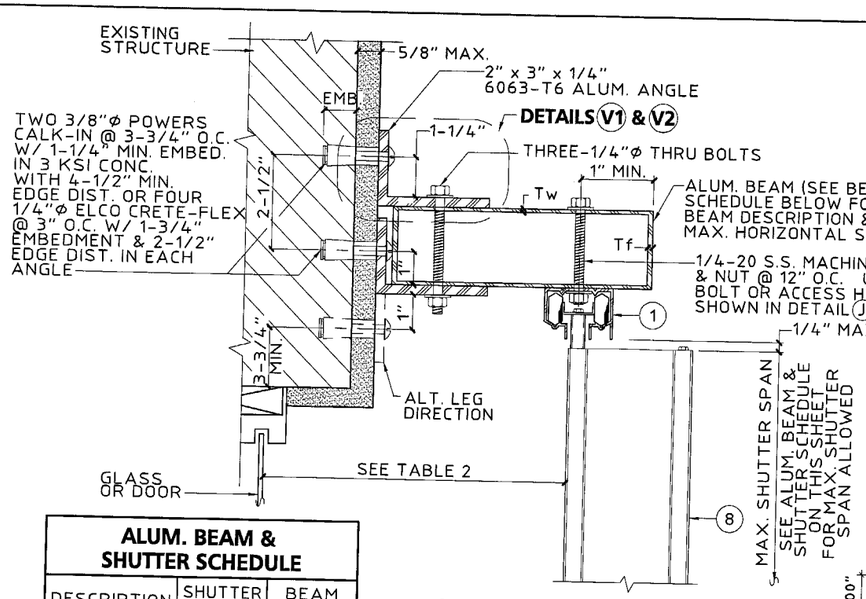

(MAX. DESIGN LOAD ± 72 PSF)

(H) TOP SUPPORT BEAM DETAIL
SCALE: 3" = 1'-0"

ALUM. BEAM & SHUTTER SCHEDULE		
DESCRIPTION	SHUTTER SPAN	BEAM SPAN
2" x 5" Tw = .125" Tf = .125"	5'-0"	9'-5"
	8'-0"	8'-1"
	10'-0"	7'-6"
2" x 8" Tw = .072" Tf = .224"	5'-0"	14'-0"
	8'-0"	11'-6"
	10'-0"	10'-4"
2" x 9" Tw = .072" Tf = .224"	5'-0"	15'-5"
	8'-0"	12'-5"
	10'-0"	11'-2"

NOTE:
1. USE BEAM SCHEDULE FOR DETAILS (H) AND (J).
2. SHUTTER SPAN TO BE LIMITED TO THOSE SHOWN IN TABLE, SHEET 5.
3. BEAM SPAN SHALL BE CONSIDERED AS THE DISTANCE FROM ℄ OF SUPPORT TO ℄ OF SUPPORT.

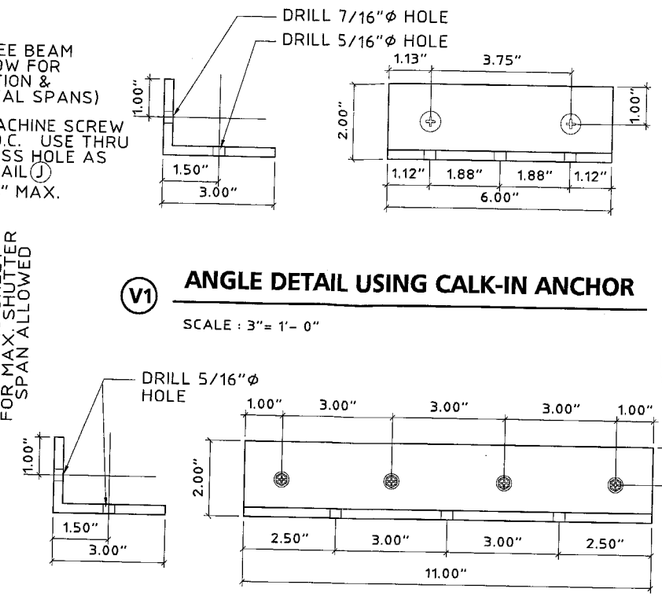

(V1) ANGLE DETAIL USING CALK-IN ANCHOR
SCALE : 3"= 1'- 0"

(V2) ANGLE DETAIL USING CRETE-FLEX ANCHOR
SCALE : 3"= 1'- 0"

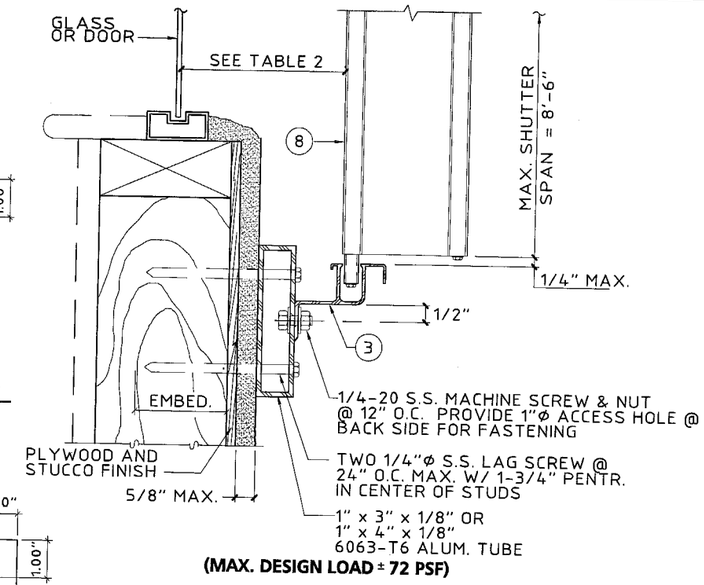

(MAX. DESIGN LOAD ± 72 PSF)

(I) WALL MOUNT SECTION - USING ALUM. TUBE
SCALE: 3" = 1'-0"

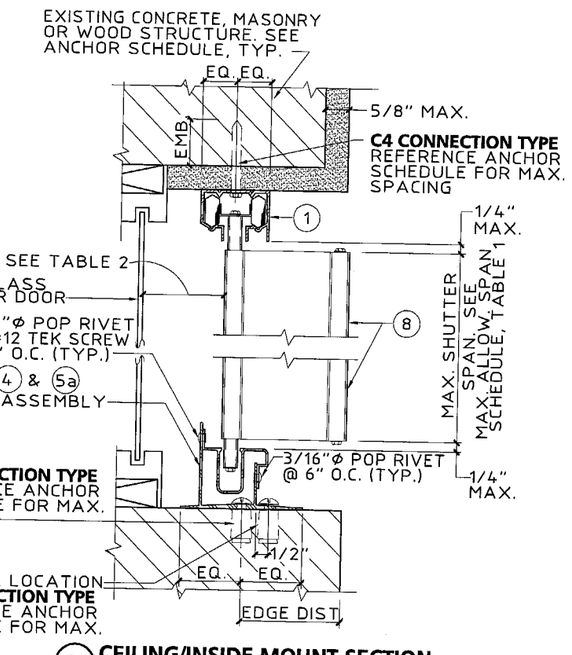

(L) CEILING/INSIDE MOUNT SECTION
SCALE: 3" = 1'-0"

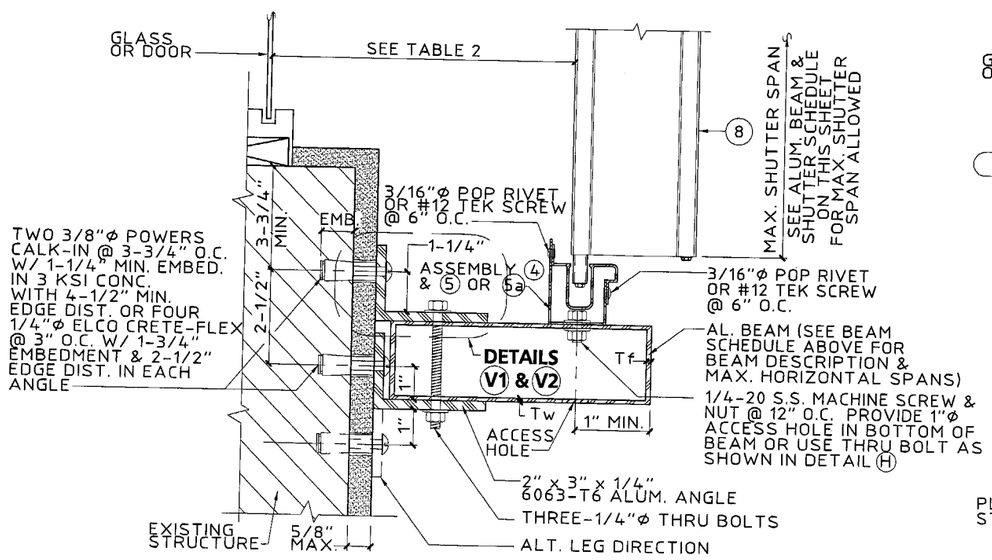

(MAX. DESIGN LOAD ± 72 PSF)

(J) BOTTOM SUPPORT BEAM DETAIL
SCALE: 3" = 1'-0"

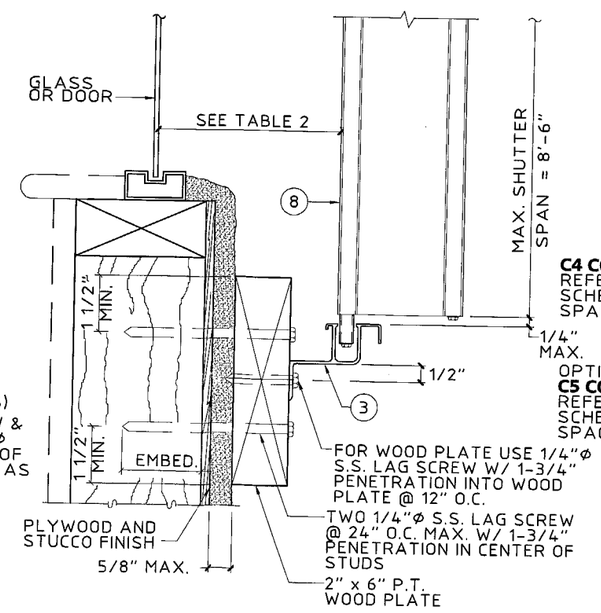

(MAX. DESIGN LOAD ± 72 PSF)

(K) WALL MOUNT SECTION - USING 2" x 6" P.T. WOOD PLATE
SCALE: 3" = 1'-0"

Approved as complying with the Florida Building Code
Date 05/19/2005
NOA# 05-0411.03
Miami Dade Product Control Division
By

Thornton-Tomasetti Group
330 N. Andrews Ave., Suite 450 • Ft. Lauderdale, FL 33301
Tel. (954) 522-3690 • Fax (954) 522-3691 • COA # 7519
Website: www.TheTTGroup.com

Copyright © 2005 Thornton-Tomasetti Group, Inc.
HT100 LICENSED BY HI-TECH SHUTTER GROUP, INC.

HT-100 ALUMINUM ACCORDION SHUTTER

J.B.S. TRADE CORP.
13818 S.W. 139TH COURT
MIAMI, FL 33186
PHONE: 305-228-6198
FAX: 305-228-6198

V.J. Knezevich
Professional Engineer
FL License No.: 0010983
MAR 29 2005

revisions			
no	date	by	description
1	12/01/03	VJK	COUNTY COMMENTS
2	12/20/04	VJK	DETAIL G ANCHOR TYPE

HTSG I.D. # 05032902458D

date 10/17/2002	
scale AS NOTED	drawn by MCR
design by VJK	checked by VJK
drawing no. 05-335	
sheet 4 of 7	

Print Information: \\hurricane\ka\Cadd\Associations\Hi-Tech\JBS_Trade\05-335\R2-sub\05-335-04.dwg MContu 03/29/2005 01:30:48pm 03/29/05 13:16

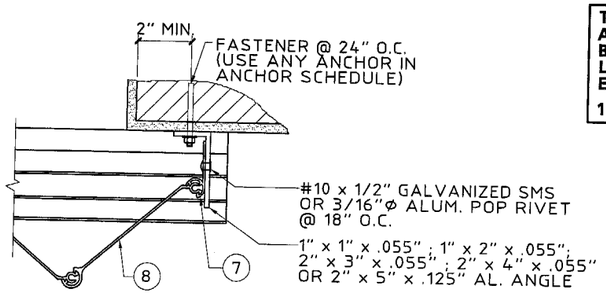

M ALT. CLOSURE DETAIL
SCALE: 3" = 1'-0"

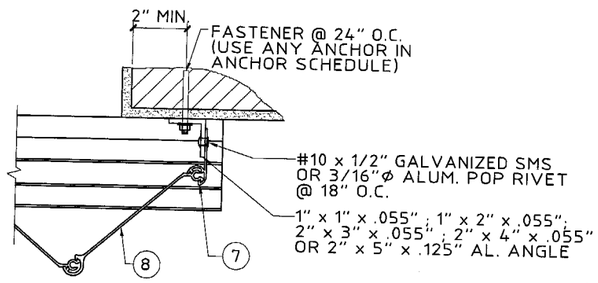

N ALT. CLOSURE DETAIL
SCALE: 3" = 1'-0"

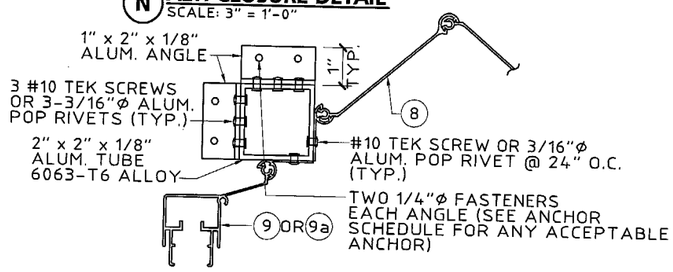

NOTE:
EITHER CONDITION MAY BE TYPICAL FOR EITHER SIDE

P CORNER CLOSURE DETAIL
SCALE: 3" = 1'-0"

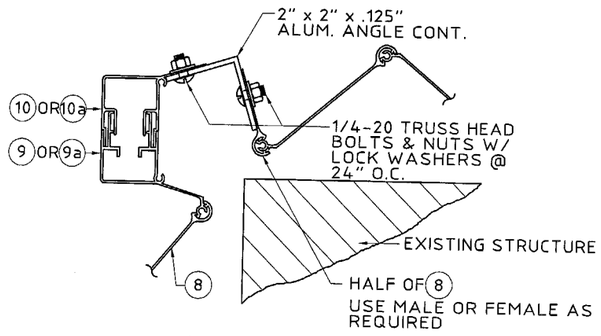

Q ALT. CORNER CLOSURE DETAIL
SCALE: 3" = 1'-0"

TABLE 1 — MAXIMUM ALLOWABLE SPAN SCHEDULE

NEG. DESIGN LOAD (PSF)	TYPE A ALL MOUNTING CONDITIONS EXCEPT C E F (FT - IN)	TYPE B DETAIL F OR DETAIL C W/ SINGLE ANGLE REQUIRED 3-3/4" MAX. B.O. (FT - IN)	TYPE C DETAIL C DOUBLE ANGLE REQUIRED 3-3/4" MAX. B.O. (FT - IN)	TYPE D DETAIL E 9-3/16" MAX. B.O. (FT - IN)
30.0	13 - 1	12 - 4	13 - 1	12 - 7
38.0	13 - 1	11 - 0	13 - 1	11 - 2
40.0	12 - 11	10 - 8	12 - 5	10 - 11
48.0	12 - 4	9 - 9	10 - 4	10 - 0
52.0	12 - 1	9 - 4	9 - 7	9 - 7
56.0	11 - 11	9 - 0	9 - 0	9 - 3
61.5	11 - 7	8 - 7	8 - 7	8 - 10
63.3	11 - 6	8 - 6	8 - 6	8 - 8
66.8	10 - 11	8 - 3	8 - 3	8 - 5
67.5	10 - 9	8 - 3	8 - 3	8 - 5
71.2	10 - 3	8 - 0	8 - 0	8 - 2
75.0	9 - 8	7 - 8	7 - 8	8 - 0
81.4	8 - 11	7 - 0	7 - 0	7 - 4
86.8	8 - 5	6 - 7	6 - 7	6 - 10
91.4	8 - 0	6 - 3	6 - 3	6 - 6
100.0	7 - 3	5 - 9	5 - 9	6 - 0
110.0	6 - 7	5 - 2	5 - 2	5 - 5
120.0	6 - 1	4 - 9	4 - 9	5 - 0
130.0	5 - 7	4 - 5	4 - 5	4 - 7
140.0	5 - 2	4 - 1	4 - 1	4 - 3
150.0	4 - 10	3 - 10	3 - 10	4 - 0
160.0	4 - 6	3 - 7	3 - 7	3 - 9
170.0	4 - 3	3 - 4	3 - 4	3 - 6

NOTES:

1. REFERENCE APPROPRIATE COLUMN IN TABLE 1 BASED ON MOUNTING CONDITION IN FIELD.
2. FOR DESIGN LOADS BETWEEN TABULATED VALUES, USE NEXT HIGHER LOAD OR LINEAR INTERPOLATION MAY BE USED TO DETERMINE ALLOWABLE SPANS.
3. ENTER TABLE 1 WITH NEGATIVE DESIGN LOAD TO DETERMINE MAX. SHUTTER SPAN.
4. ENTER TABLE 2 WITH POSITIVE DESIGN LOAD TO DETERMINE MIN. SHUTTER SEPARATION FROM GLASS.

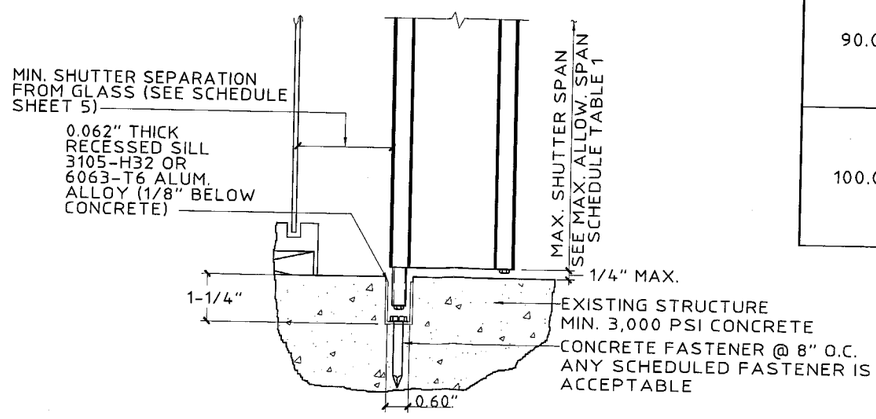

R ALTERNATE FLOOR MOUNT DETAIL
SCALE: 3" = 1'-0"

TABLE 2 — MINIMUM SHUTTER SEPARATION FROM GLASS (IN)

POSITIVE DESIGN LOAD (W) (PSF)	ACTUAL SPAN (FT - IN)	MINIMUM SEPARATION FROM GLASS FOR INSTALLATIONS LESS THAN OR EQUAL TO 30' ABOVE GRADE (INCHES)	MINIMUM SEPARATION FROM GLASS FOR INSTALLATIONS GREATER THAN 30' ABOVE GRADE (INCHES)
30.0	5 - 0	2-7/8	1-1/2
	7 - 0	2-7/8	1-5/8
	8 - 0	2-7/8	1-5/8
	11 - 0	3	2-1/8
	13 - 1	3-3/4	2-3/4
40.0	5 - 0	2-7/8	1-1/2
	7 - 0	2-7/8	1-5/8
	8 - 0	2-7/8	1-5/8
	11 - 0	3	2-1/4
	12 - 11	3-3/4	3
50.0	5 - 0	2-7/8	1-1/2
	7 - 0	2-7/8	1-5/8
	8 - 0	2-7/8	1-3/4
	11 - 0	3	2-1/2
	12 - 2	3-3/4	3
60.0	5 - 0	2-7/8	1-1/2
	7 - 0	2-7/8	1-5/8
	8 - 0	2-7/8	1-3/4
	11 - 0	3	1-3/4
	11 - 8	3-3/4	3
70.0	5 - 0	2-7/8	1-1/2
	7 - 0	2-7/8	1-5/8
	8 - 0	2-7/8	1-7/8
	9 - 6	3	2-1/4
	10 - 4	3	2-5/8
80.0	5 - 0	2-7/8	1-1/2
	7 - 0	2-7/8	1-3/4
	8 - 0	2-7/8	1-7/8
	11 - 0	3-1/8	3-1/8
	12 - 1	4	4
90.0	5 - 0	2-7/8	1-1/2
	7 - 0	2-7/8	1-3/4
	8 - 0	2-7/8	2
	11 - 0	3-3/8	3-3/8
	11 - 6	3-7/8	4
100.0	5 - 0	2-7/8	1-1/2
	7 - 0	2-7/8	1-3/4
	8 - 0	2-7/8	2
	9 - 0	3	2-3/4
	10 - 3	3	3

Approved as complying with the Florida Building Code
Date 05/19/2005
NOA# 05-0411.03
Miami Dade Product Control Division
By Helmy A. Mekhael

Thornton-Tomasetti Group
330 N. Andrews Ave., Suite 450 • Ft. Lauderdale, FL 33301
Tel. (954) 522-3690 • Fax (954) 522-3691 • COA # 7519
Website: www.TheTTGroup.com

Copyright © 2005 Thornton-Tomasetti Group, Inc.
HT100 LICENSED BY HI-TECH SHUTTER GROUP, INC.

HT-100 ALUMINUM ACCORDION SHUTTER

J.B.S. TRADE CORP.
13818 S.W. 139TH COURT
MIAMI, FL 33186
PHONE: 305-228-6198
FAX: 305-228-6198

V.J. Knezevich
Professional Engineer
FL License No.: PE0010983

MAR 29 2005

revisions

no	date	by	description
1	12/04/02	VJK	COUNTY COMMENTS
2	12/20/04	VJK	DETAIL G ANCHOR TYPE

HTSG I.D. # 05032902458D

date 10/17/2002
scale AS NOTED
drawn by MCR
design by VJK
checked by VJK
drawing no. 05-335
sheet 5 of 7

Print Information: \\hurricane\ka\Cadd\Associations\Hi-Tech\JBS_Trade\05-335\R2-sub\05-335-05.dwg MCantu 03/29/2005 01:30:56pm 03/29/05 13:16

ANCHOR SCHEDULE

FASTENER MAXIMUM SPACING (INCHES) REQUIRED FOR VARIOUS DESIGN LOADS AND SPANS

MIN. 2" EDGE DISTANCE

EXIST. STRUC.	ANCHOR TYPE	LOAD (W) P.S.F. MAX. (SEE NOTE 1)	SPANS UP TO 5'-8" (SEE NOTE 1) CONNECTION TYPE (SEE NOTE 3)					SPANS UP TO 8'-0" (SEE NOTE 1) CONNECTION TYPE (SEE NOTE 3)					SPANS UP TO 9'-0" (SEE NOTE 1) CONNECTION TYPE (SEE NOTE 3)					SPANS UP TO 13'-1" (SEE NOTE 1) CONNECTION TYPE (SEE NOTE 3)				
			C1	C2	C3	C4	C5	C1	C2	C3	C4	C5	C1	C2	C3	C4	C5	C1	C2	C3	C4	C5
CONCRETE	1/4"ϕ ITW TAPCON W/ 1-1/4" MIN. EMBEDMENT (MIN. 3,100 P.S.I. CONCRETE)	45.0	12	12	12	12	7	12	12	12	8	5	12	12	12	7	4	10	5	5	5	3
		57.0	12	12	12	9	6	12	12	12	6	4	11	9	10	6	3	8	3		4	
		73.0	12	12	12	7	4	10	5	5	5	3	9	4	3	4		8	3		4	
		105.0	10	5	5	5	3	8	3		4		8	3		4		8	3		4	
		170.0	8	3		4		8	3		4		8	3		4		8	3		4	
	* 1/4"ϕ POWERS CALK-IN W/ 7/8" EMBEDMENT & 1/4-20 STAINLESS STEEL MACHINE SCREW (MIN. 3,000 P.S.I. CONCRETE)	45.0	12	12	12	12	9	12	12	12	9	6	12	12	12	8	6	12	9	9	5	4
		57.0	12	12	12	10	7	12	12	12	7	5	12	12	12	6	4	12	5	4	4	3
		73.0	12	12	12	8	5	12	9	9	5	4	12	6	6	5	3	12	5	4	4	3
		105.0	12	9	8	5	4	12	5	4	4	3	12	5	4	4	3	12	5	4	4	3
		170.0	12	5	4	4	3	12	5	4	4	3	12	5	4	4	3	12	5	4	4	3
	1/4"ϕ POWERS ZAMAC NAIL-IN W/ 1-1/8" MIN. EMBEDMENT (MIN. 3,000 P.S.I. CONCRETE)	45.0	12	12	12	10	6	12	12	12	7	4	12	12	12	6	4	8	4	4	4	
		57.0	12	12	12	8	5	10	10	10	5	3	9	7	8	5	3	6			3	
		73.0	11	11	11	6	3	8	4	4	4		7	3	3	4		6			3	
		105.0	8	4	4	4		6			3		6			3		6			3	
		170.0	6			3		6			3		6			3		6			3	
	* * 1/4"ϕ ELCO MALE/ FEMALE "PANELMATE" W/ 1-1/4 MIN. EMBEDMENT & 1/4-20 MACHINE SCREW WITH NUT (MIN. 3,300 P.S.I. CONCRETE)	45.0	12	12	12	12	11	12	12	12	12	7	12	12	12	11	6	12	8	7	7	4
		57.0	12	12	12	12	8	12	12	12	9	6	12	12	12	8	5	11	4	4	6	3
		73.0	12	12	12	10	6	12	8	8	7	4	12	5	5	6	4	11	4	4	6	3
		105.0	12	7	7	7	4	11	4	4	6	3	11	4	4	6	3	11	4	4	6	3
		170.0	11	4	4	6	3	11	4	4	6	3	11	4	4	6	3	11	4	4	6	3
	1/4" ELCO TEXTRON HEX-FLANGE TAPCON/ HEX HEAD TAPCON W/ 1-3/4" EMBED (MIN. 3,320 P.S.I. CONCRETE)	45.0	12	12	12	12	11	12	12	12	12	7	12	12	12	11	7	12	8	8	7	4
		57.0	12	12	12	12	8	12	12	12	9	6	12	12	12	8	5	12	4	4	6	3
		73.0	12	12	12	10	6	12	8	8	7	4	12	6	5	6	4	12	4	4	6	3
		105.0	12	8	8	7	4	12	4	4	6	3	12	4	4	6	3	12	4	4	6	3
		170.0	12	4	4	6	3	12	4	4	6	3	12	4	4	6	3	12	4	4	6	3
	1/4"ϕ ELCO CRETE FLEX W/ 1-3/4" MIN. EMBEDMENT (MIN. 3,350 P.S.I. CONCRETE)	45.0	12	12	12	12	11	12	12	12	12	7	12	12	12	11	7	12	8	8	7	4
		57.0	12	12	12	12	8	12	12	12	9	6	12	12	12	8	5	12	4	4	6	3
		73.0	12	12	12	10	6	12	8	8	7	4	12	6	5	6	4	12	4	4	6	3
		105.0	12	8	8	7	4	12	4	4	6	3	12	4	4	6	3	12	4	4	6	3
		170.0	12	4	4	6	3	12	4	4	6	3	12	4	4	6	3	12	4	4	6	3

MIN. 3" EDGE DISTANCE

EXIST. STRUC.	ANCHOR TYPE	LOAD (W) P.S.F. MAX. (SEE NOTE 1)	SPANS UP TO 5'-8" (SEE NOTE 1) CONNECTION TYPE (SEE NOTE 3)					SPANS UP TO 8'-0" (SEE NOTE 1) CONNECTION TYPE (SEE NOTE 3)					SPANS UP TO 9'-0" (SEE NOTE 1) CONNECTION TYPE (SEE NOTE 3)					SPANS UP TO 13'-1" (SEE NOTE 1) CONNECTION TYPE (SEE NOTE 3)				
			C1	C2	C3	C4	C5	C1	C2	C3	C4	C5	C1	C2	C3	C4	C5	C1	C2	C3	C4	C5
CONCRETE	1/4"ϕ ITW TAPCON W/ 1-1/4" MIN. EMBEDMENT (MIN. 3,100 P.S.I. CONCRETE)	45.0	12	12	12	12	9	12	12	12	10	6	12	12	12	9	5	11	6	6	6	3
		57.0	12	12	12	11	7	12	12	12	8	5	12	10	12	7	4	9	3	3	5	3
		73.0	12	12	12	9	5	11	6	6	6	4	10	4	4	5	3	9	3	3	5	3
		105.0	11	6	6	6	3	9	3	3	5	3	9	3	3	5	3	9	3	3	5	3
		170.0	9	3	3	5	3	9	3	3	5	3	9	3	3	5	3	9	3	3	5	3
	* 1/4"ϕ POWERS CALK-IN W/ 7/8" EMBEDMENT & 1/4-20 STAINLESS STEEL MACHINE SCREW (MIN. 3,000 P.S.I. CONCRETE)	45.0	12	12	12	12	12	12	12	12	12	10	12	12	12	12	9	12	11	11	9	6
		57.0	12	12	12	12	11	12	12	12	12	8	12	12	12	10	7	12	6	6	7	5
		73.0	12	12	12	12	8	12	12	11	9	6	12	8	8	8	5	12	6	6	7	5
		105.0	12	11	11	9	6	12	6	6	7	5	12	6	6	7	5	12	6	6	7	5
		170.0	12	6	6	7	5	12	6	6	7	5	12	6	6	7	5	12	6	6	7	5
	1/4"ϕ POWERS ZAMAC NAIL-IN W/ 1-1/8" MIN. EMBEDMENT (MIN. 3,000 P.S.I. CONCRETE)	45.0	12	12	12	12	7	12	12	12	9	5	12	12	12	8	4	9	5	5	5	3
		57.0	12	12	12	10	6	12	12	12	7	4	10	8	9	6	3	7			4	
		73.0	12	12	12	7	4	9	5	5	5	3	8	3	3	4		7			4	
		105.0	9	5	4	5	3	7			4		7			4		7			4	
		170.0	7			4		7			4		7			4		7			4	
	* * 1/4"ϕ ELCO MALE/ FEMALE "PANELMATE" W/ 1-1/4 MIN. EMBEDMENT & 1/4-20 MACHINE SCREW WITH NUT (MIN. 3,300 P.S.I. CONCRETE)	45.0	12	12	12	12	12	12	12	12	12	8	12	12	12	12	7	12	8	8	8	5
		57.0	12	12	12	12	9	12	12	12	11	6	12	12	12	10	6	12	4	4	7	4
		73.0	12	12	12	12	7	12	8	8	8	5	12	6	5	7	4	12	4	4	7	4
		105.0	12	8	7	8	5	12	4	4	7	4	12	4	4	7	4	12	4	4	7	4
		170.0	12	4	4	7	4	12	4	4	7	4	12	4	4	7	4	12	4	4	7	4
	1/4" ELCO TEXTRON HEX-FLANGE TAPCON/ HEX HEAD TAPCON W/ 1-3/4" EMBED (MIN. 3,320 P.S.I. CONCRETE)	45.0	12	12	12	12	12	12	12	12	12	9	12	12	12	12	8	12	10	10	9	6
		57.0	12	12	12	12	11	12	12	12	12	7	12	12	12	10	7	12	6	5	7	4
		73.0	12	12	12	12	8	12	11	10	9	6	12	7	7	8	5	12	6	5	7	4
		105.0	12	10	10	9	6	12	6	5	7	4	12	6	5	7	4	12	6	5	7	4
		170.0	12	6	5	7	4	12	6	5	7	4	12	6	5	7	4	12	6	5	7	4
	1/4"ϕ ELCO CRETE FLEX W/ 1-3/4" MIN. EMBEDMENT (MIN. 3,350 P.S.I. CONCRETE)	45.0	12	12	12	12	12	12	12	12	12	9	12	12	12	12	8	12	10	10	9	6
		57.0	12	12	12	12	11	12	12	12	12	7	12	12	12	10	7	12	6	5	7	4
		73.0	12	12	12	12	8	12	11	10	9	6	12	7	7	8	5	12	6	5	7	4
		105.0	12	10	10	9	6	12	6	5	7	4	12	6	5	7	4	12	6	5	7	4
		170.0	12	6	5	7	4	12	6	5	7	4	12	6	5	7	4	12	6	5	7	4

ANCHOR SCHEDULE

FASTENER MAXIMUM SPACING (INCHES) REQUIRED FOR VARIOUS DESIGN LOADS AND SPANS

MIN. 3/4" EDGE DISTANCE

EXIST. STRUC.	ANCHOR TYPE	LOAD (W) P.S.F. MAX. (SEE NOTE 1)	SPANS UP TO 5'-8" (SEE NOTE 1) CONNECTION TYPE (SEE NOTE 3)					SPANS UP TO 8'-0" (SEE NOTE 1) CONNECTION TYPE (SEE NOTE 3)					SPANS UP TO 9'-0" (SEE NOTE 1) CONNECTION TYPE (SEE NOTE 3)					SPANS UP TO 13'-1" (SEE NOTE 1) CONNECTION TYPE (SEE NOTE 3)				
			C1	C2	C3	C4	C5	C1	C2	C3	C4	C5	C1	C2	C3	C4	C5	C1	C2	C3	C4	C5
WOOD	1/4"ϕ WOOD LAG W/ 1-3/4" MIN. THREAD PENETRATION SHEAR PARALLEL OR PERP. TO WOOD GRAIN	45.0	12	12	12	9	7	12	12	12	6	5	12	12	12	5	4	12	9	9	3	3
		57.0	12	12	12	7	5	12	12	12	5	3	12	12	12	4	3	12	5	4	3	
		73.0	12	12	12	5	4	12	9	9	3	3	12	6	6	3		12	5	4	3	
		105.0	12	9	8	3	3	12	5	4	3		12	5	4	3		12	5	4	3	
		170.0	12	5	4	3		12	5	4	3		12	5	4	3		12	5	4	3	

SEE PAGE 7 FOR ANCHOR NOTES

Approved as complying with the Florida Building Code
Date 05/19/2005
NOA# 05-0411.03
Miami Dade Product Control Division
By [signature]

Thornton-Tomasetti Group

330 N. Andrews Ave., Suite 450 • Ft. Lauderdale, FL 33301
Tel. (954) 522-3690 • Fax (954) 522-3691 • COA # 7519
Website: www.TheTTGroup.com

Copyright © 2005 Thornton-Tomasetti Group, Inc.
HT100 LICENSED BY HI-TECH SHUTTER GROUP, INC.

HT-100 ALUMINUM ACCORDION SHUTTER

J.B.S. TRADE CORP.
13818 S.W. 139TH COURT
MIAMI, FL 33186
PHONE: 305-228-6198
FAX: 305-228-6198

V.J. Knezevich
Professional Engineer
FL License No. PE 0010983
MAR 29 2005

revisions

no	date	by	description
1	12/04/02	VJK	COUNTY COMMENTS
2	12/20/04	VJK	DETAIL 6 ANCHOR TYPE

HTSG I.D. # 050329024580

date 10/17/2002	
scale AS NOTED	drawn by MCR
design by VJK	checked by VJK
drawing no. 05-335	
sheet 6 of 7	

Print Information: \\hurricane\ka\Cadd\Associations\Hi-Tech\JBS_Trade\05-335\R2-sub\05-335-06.dwg MCantu 03/29/2005 01:31:05pm 03/29/05 13:16

ANCHOR SCHEDULE

FASTENER MAXIMUM SPACING (INCHES) REQUIRED FOR VARIOUS DESIGN LOADS AND SPANS

EXIST. STRUC.: HOLLOW CONCRETE BLOCK

ANCHOR TYPE	LOAD (W) P.S.F. MAX. (SEE NOTE 1)	MIN. 2" EDGE DISTANCE																				MIN. 3" EDGE DISTANCE																			
		SPANS UP TO 5'-8" (SEE NOTE 1)					SPANS UP TO 8'-0" (SEE NOTE 1)					SPANS UP TO 9'-0" (SEE NOTE 1)					SPANS UP TO 13'-1" (SEE NOTE 1)					SPANS UP TO 5'-8" (SEE NOTE 1)					SPANS UP TO 8'-0" (SEE NOTE 1)					SPANS UP TO 9'-0" (SEE NOTE 1)					SPANS UP TO 13'-1" (SEE NOTE 1)				
		CONNECTION TYPE (SEE NOTE 3)					CONNECTION TYPE (SEE NOTE 3)					CONNECTION TYPE (SEE NOTE 3)					CONNECTION TYPE (SEE NOTE 3)					CONNECTION TYPE (SEE NOTE 3)					CONNECTION TYPE (SEE NOTE 3)					CONNECTION TYPE (SEE NOTE 3)					CONNECTION TYPE (SEE NOTE 3)				
		C1	C2	C3	C4	C5	C1	C2	C3	C4	C5	C1	C2	C3	C4	C5	C1	C2	C3	C4	C5	C1	C2	C3	C4	C5	C1	C2	C3	C4	C5	C1	C2	C3	C4	C5	C1	C2	C3	C4	C5
1/4"Ø ITW TAPCON W/ 1-1/4" MIN. EMBEDMENT	45.0	12	12	12	7	4	9	9	9	5	3	8	8	8	4		5	3	3	3		12	12	12	8	5	10	10	10	6	3	9	9	9	5	3	6	3	3	3	
	57.0	10	10	10	5	3	7	7	7	4		6	5	5	3		4					11	11	11	6	4	8	8	8	4		7	5	6	4		5			3	
	73.0	7	7	7	4		5	3	3	3		4					4					8	8	8	5	3	6	3	3	3		5			3		5			3	
	105.0	5			3		4					4					4					6	3	3	3		5			3		5			3		5			3	
	170.0	4					4					4					4					5			3		5			3		5			3		5			3	
* 1/4"Ø POWERS CALK-IN W/ 7/8" EMBEDMENT & 1/4-20 STAINLESS STEEL MACHINE SCREW	45.0	12	12	12	7	5	11	11	11	5	3	10	10	10	4	3	7	3	3	3		12	12	12	12	7	12	12	12	8	5	12	12	12	7	4	8	4	4	5	3
	57.0	12	12	12	6	4	9	9	9	4		8	6	7	3		5					12	12	12	9	5	11	11	11	6	4	10	8	9	5	3	7			4	
	73.0	10	10	10	4	3	7	4	3	3		6			3		5					12	12	12	7	4	9	5	4	5	3	8	3	3	4		7			4	
	105.0	7	3	3	3		5					5					5					8	4	4	5	3	7			4		7			4		7			4	
	170.0	5					5					5					5					7			4		7			4		7			4		7			4	
1/4"Ø POWERS ZAMAC NAIL-IN W/ 1-1/8" MIN. EMBEDMENT	45.0	12	12	12	7	4	8	8	8	5	3	7	7	7	4		5			3		12	12	12	9	5	9	9	9	6	3	8	8	8	5	3	6	3	3	3	
	57.0	9	9	9	6	3	6	6	6	4		6	4	5	3		4					10	10	10	7	4	7	7	7	5		6	5	6	4		4			3	
	73.0	7	7	7	4		5	3		3		4					4					8	8	8	5	3	6	3	3	4		5			3		4			3	
	105.0	5			3		4					4					4					5	3	3	3		4			3		4			3		4			3	
	170.0	4					4					4					4					4			3		4			3		4			3		4			3	
* * 1/4"Ø ELCO MALE/ FEMALE "PANELMATE" W/ 1-1/4 MIN. EMBEDMENT & 1/4-20 MACHINE SCREW WITH NUT	45.0	12	12	12	9	5	12	12	12	6	4	11	11	11	5	3	8	4	4	3		12	12	12	10	6	12	12	12	7	4	12	12	12	6	4	8	4	4	4	
	57.0	12	12	12	7	4	10	10	10	5	3	9	7	8	4		6			3		12	12	12	8	5	10	10	10	5	3	9	7	8	5	3	6			3	
	73.0	11	11	11	5	3	8	4	4	3		7	3	3	3		6			3		12	12	12	6	4	8	4	4	4		7	3	3	4		6			3	
	105.0	8	4	4	3		6			3		6			3		6			3		8	4	4	4		6			3		6			3		6			3	
	170.0	6			3		6			3		6			3		6			3		6			3		6			3		6			3		6			3	
1/4" ELCO TEXTRON HEX-FLANGE TAPCON/ HEX HEAD TAPCON W/ 1-1/4" EMBED	45.0	12	12	12	10	5	11	11	11	7	4	10	10	10	6	3	7	3	3	4		12	12	12	12	7	12	12	12	9	5	12	12	12	8	4	8	4	4	5	3
	57.0	12	12	12	8	4	9	9	9	5	3	8	6	7	5		5			3		12	12	12	10	5	11	11	11	7	4	10	8	9	6	3	7			4	
	73.0	10	10	10	6	3	7	4	3	4		6			3		5			3		12	12	12	7	4	8	5	4	5	3	7	3	3	4		7			4	
	105.0	7	3	3	4		5			3		5			3		5			3		8	4	4	5	3	7			4		7			4		7			4	
	170.0	5			3		5			3		5			3		5			3		7			4		7			4		7			4		7			4	
1/4"Ø ELCO CRETE FLEX W/ 1-1/4" MIN. EMBEDMENT	45.0	12	12	12	10	5	11	11	11	7	4	10	10	10	6	3	7	3	3	4		12	12	12	12	7	12	12	12	9	5	12	12	12	8	4	8	4	4	5	3
	57.0	12	12	12	8	4	9	9	9	5	3	8	6	7	5		5			3		12	12	12	10	5	11	11	11	7	4	10	8	9	6	3	7			4	
	73.0	10	10	10	6	3	7	4	3	4		6			3		5			3		12	12	12	7	4	8	5	4	5	3	7	3	3	4		7			4	
	105.0	7	3	3	4		5			3		5			3		5			3		8	4	4	5	3	7			4		7			4		7			4	
	170.0	5			3		5			3		5			3		5			3		7			4		7			4		7			4		7			4	

ANCHOR NOTES:

1. **SPANS AND LOADS SHOWN HERE ARE FOR DETERMINING ANCHOR SPACING ONLY. ALLOWABLE STORM SHUTTER SPANS FOR SPECIFIC LOADS MUST BE LIMITED TO THOSE SHOWN IN TABLE 1, PAGE 5.**
2. ENTER ANCHOR SCHEDULE BASED ON THE EXISTING STRUCTURE MATERIAL, ANCHOR TYPE AND EDGE DISTANCE. SELECT DESIGN LOAD GREATER THAN OR EQUAL TO NEGATIVE DESIGN LOAD ON SHUTTER AND SELECT SPAN GREATER THAN OR EQUAL TO SHUTTER SPAN.
3. EXISTING STRUCTURE MAY BE CONCRETE, HOLLOW BLOCK OR WOOD FRAMING. REFERENCE ANCHOR SCHEDULE FOR PROPER ANCHOR TYPE BASED ON TYPE OF EXISTING STRUCTURE AND APPROPRIATE CONNECTION TYPE. SEE MOUNTING SECTION DETAILS FOR IDENTIFICATION OF CONNECTION TYPE.
4. ANCHORS SHALL BE INSTALLED IN ACCORDANCE WITH MANUFACTURERS' RECOMMENDATIONS.
5. MINIMUM EMBEDMENT AND EDGE DISTANCE EXCLUDES WALL FINISH OR STUCCO.
6. WHERE EXISTING STRUCTURE IS WOOD FRAMING, WOOD FRAMING CONDITIONS VARY. FIELD VERIFY THAT FASTENERS ARE INTO ADEQUATE WOOD FRAMING MEMBERS, NOT PLYWOOD. FASTENING TO PLYWOOD IS ACCEPTABLE ONLY FOR SIDE CLOSURE PIECES.
7. WHERE LAG SCREWS FASTEN TO NARROW FACE OF STUD FRAMING, FASTENER SHALL BE LOCATED IN CENTER OF NOMINAL 2" x 4" (MIN.) WOOD STUD. 3/4" EDGE DISTANCE IS ACCEPTABLE FOR WOOD FRAMING. WOOD STUD SHALL BE "SOUTHERN PINE" G=0.55 OR GREATER DENSITY. LAG SCREWS SHALL HAVE PHILLIPS PAN HEAD OR HEX HEAD.
8. MACHINE SCREWS SHALL HAVE MINIMUM OF 1/2" ENGAGEMENT OF THREADS IN BASE ANCHOR AND MAY HAVE EITHER A PAN HEAD, TRUSS HEAD, OR WAFER HEAD (SIDEWALK BOLT), U.O.N.
9. ▨ DESIGNATES ANCHOR CONDITIONS WHICH ARE NOT ACCEPTABLE USES.
10. * DESIGNATES ANCHORS WHICH ARE REMOVABLE BY REMOVING MACHINE SCREW, NUT OR WASHERED WINGNUT.
11. FOR BUILD-OUT MOUNT SECTION (D) ANCHOR SPACING SHALL NOT EXCEED 8-1/2" O.C.
12. FOR BUILD-OUT MOUNT SECTION (E) ANCHOR SPACING SHALL NOT EXCEED 6" O.C.

Approved as complying with the Florida Buiding Code
Date 05/19/2005
NOA# 05-0411.03
Miami Dade Product Control Division
By Helmy A. Abdelsalam

Thornton-Tomasetti Group
330 N. Andrews Ave., Suite 450 • Ft. Lauderdale, FL 33301
Tel. (954) 522-3690 • Fax (954) 522-3691 • COA # 7519
Website: www.TheTTGroup.com

Copyright © 2005 Thornton-Tomasetti Group, Inc.
HT100 LICENSED BY HI-TECH SHUTTER GROUP, INC.

HT-100 ALUMINUM ACCORDION SHUTTER

J.B.S. TRADE CORP.
13818 S.W. 139TH COURT
MIAMI, FL 33186
PHONE: 305-228-6198
FAX: 305-228-6198

V.J. Knezevich
Professional Engineer
FL License No. PE 0010983

MAR 29 2005

revisions			
no	date	by	description
1	12/04/03	VJK	COUNTY COMMENTS
2	12/20/04	VJK	DETAIL G ANCHOR TYPE

HTSG I.D. # 05032902458D

date 10/17/2002	
scale AS NOTED	drawn by MCR
design by VJK	checked by VJK
drawing no. 05-335	
sheet 7 of 7	

Print Information: \\hurricane\ka\Cadd\Associations\Hi-Tech\JBS_Trade\05-335\R2-sub\05-335-07.dwg MCantu 03/29/2005 01:31:13pm 03/29/05 13:16