MIAMI-DADE COUNTY, FLORIDA
METRO-DADE FLAGLER BUILDING
140 WEST FLAGLER STREET, SUITE 1603
MIAMI, FLORIDA 33130-1563
(305) 375-2901 FAX (305) 375-2908
www.buildingcodeonline.com

BUILDING CODE COMPLIANCE OFFICE (BCCO)
PRODUCT CONTROL DIVISION

NOTICE OF ACCEPTANCE (NOA)

Ready Access
1815 Arthur Drive
West Chicago, IL 60185

SCOPE:

This NOA is being issued under the applicable rules and regulations governing the use of construction materials. The documentation submitted has been reviewed by Miami-Dade County Product Control Division and accepted by the Board of Rules and Appeals (BORA) to be used in Miami Dade County and other areas where allowed by the Authority Having Jurisdiction (AHJ).

This NOA shall not be valid after the expiration date stated below. The Miami-Dade County Product Control Division (In Miami Dade County) and/or the AHJ (in areas other than Miami Dade County) reserve the right to have this product or material tested for quality assurance purposes. If this product or material fails to perform in the accepted manner, the manufacturer will incur the expense of such testing and the AHJ may immediately revoke, modify, or suspend the use of such product or material within their jurisdiction. BORA reserves the right to revoke this acceptance, if it is determined by Miami-Dade County Product Control Division that this product or material fails to meet the requirements of the applicable building code.

This product is approved as described herein, and has been designed to comply with the Florida Building Code, including the High Velocity Hurricane Zone.

DESCRIPTION: Series Ready Access Aluminum Drive Through Window

APPROVAL DOCUMENT: Drawing No. **S-2553**, titled "Ready Access Drive Through Window "Non-Impact"" Sheets 1 through 10 of 10, dated 06/16/05, with revision #3 dated 01/24/06, prepared by RW Building Consultants, Inc., signed and sealed by Wendell W. Haney, P.E., bearing the Miami-Dade County Product Control Approval stamp with the Notice of Acceptance number and approval date by the Miami-Dade County Product Control Division.

MISSILE IMPACT RATING: None

LABELING: Each unit shall bear a permanent label with the manufacturer's name or logo, city, state and following statement: "Miami-Dade County Product Control Approved", unless otherwise noted herein.

RENEWAL of this NOA shall be considered after a renewal application has been filed and there has been no change in the applicable building code negatively affecting the performance of this product.

TERMINATION of this NOA will occur after the expiration date or if there has been a revision or change in the materials, use, and/or manufacture of the product or process. Misuse of this NOA as an endorsement of any product, for sales, advertising or any other purposes shall automatically terminate this NOA. Failure to comply with any section of this NOA shall be cause for termination and removal of NOA.

ADVERTISEMENT: The NOA number preceded by the words Miami-Dade County, Florida, and followed by the expiration date may be displayed in advertising literature. If any portion of the NOA is displayed, then it shall be done in its entirety.

INSPECTION: A copy of this entire NOA shall be provided to the user by the manufacturer or its distributors and shall be available for inspection at the job site at the request of the Building Official.
This NOA consists of this page 1 and evidence page E-1, as well as approval document mentioned above.
The submitted documentation was reviewed by **Manuel Perez, P.E.**

Ready Access

NOTICE OF ACCEPTANCE: EVIDENCE SUBMITTED

A. DRAWINGS

1. Manufacturer's die drawings and sections.
2. Drawing No. **S-2560**, titled "Ready Access Drive through Window 'Impact'", dated 06/16/05, with revision #3 dated 01/24/06, Sheets 1 through 10 of 10, prepared by RW Building Consultants, Inc., signed and sealed by Wendell W. Haney, P.E.

B. TESTS

1. Test reports on 1) Uniform Static Air Pressure Test, Loading per PA 202-94
   2) Large Missile Impact Test per SFBC, PA 201-94,
   3) Cyclic Wind Pressure Loading per SFBC, PA 203-94

   along with marked-up drawings and installation diagram of aluminum pass through window, prepared by American Test Lab, Inc. Test Report No. **ATLNC-1109.01-04R**, dated 11/09-12/04, and addendum letter dated 08/29/05, both signed and sealed by David Johnson, P.E.

C. CALCULATIONS

1. Anchor calculations and structural analysis, complying with FBC-2004, dated 09/19/05, revised on 10/11/05, prepared by RW Building Consultants, Inc., signed and sealed by Wendell W. Haney, P.E.
   Complies with ASTM E1300-98/02

D. QUALITY ASSURANCE

1. Miami Dade Building Code Compliance Office (BCCO).

E. MATERIAL CERTIFICATIONS

1. Notice of Acceptance No. **03-1210.04** issued to General Electric Company for "**Polycarbonate Plastic Sheets**" dated 12/03/04, expiring on 07/17/08.

F. STATEMENTS

1. Statement letter of conformance and no financial interest, dated 01/26/06, signed and sealed by Wendell Haney, P.E.
2. Statement letter of conformance and no financial interest, dated 07/11/05, signed and sealed by Paul Bostjancic, Ready Access Engineer.

G. OTHER

1. Letter from the consultant, dated October19, 2005, stating that the product is in compliance with the Florida Building Code (FBC).

Manuel Perez, P.E.
Pr oduct Control Examiner
NOA No 05-0719.03
Expiration Date: February 16, 2011
Approval Date: February 16, 2006

READY ACCESS®
1815 Arthur Drive ▪ West Chicago, Illinois 60185 ▪ 800-621-5045 ▪ 630-876-7766 ▪ Fax 630-876-7767

READY ACCESS DRIVE THROUGH WINDOW "NON-IMPACT"

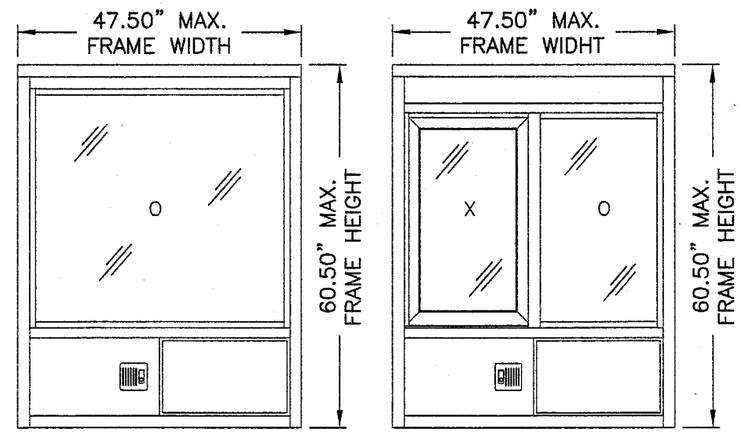

604 SERIES WINDOW

602 SERIES WINDOW

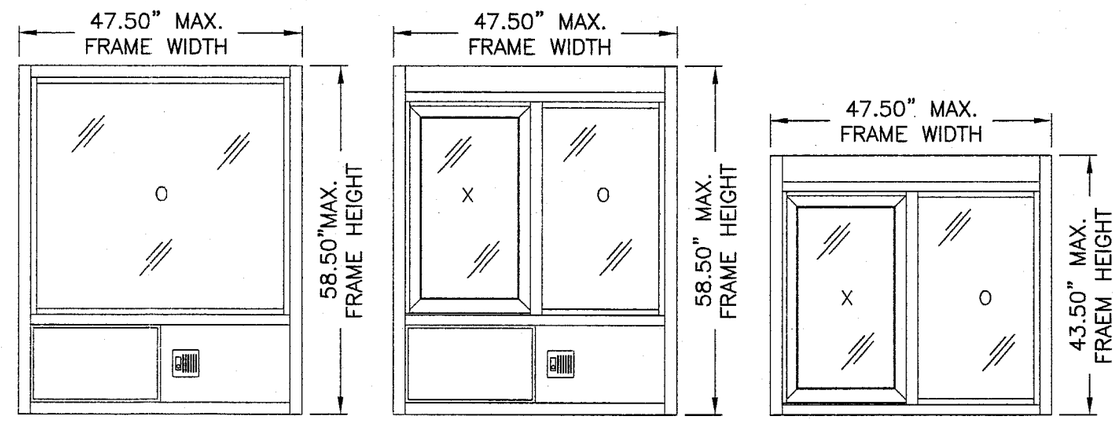

603 SERIES WINDOW

601 SERIES WINDOW

600 SERIES WINDOW

GENERAL NOTES

1. THIS PRODUCT HAS BEEN EVALUATED AND IS IN COMPLIANCE WITH THE FLORIDA BUILDING CODE (2004 FBC) INCLUDING THE "HIGH VELOCITY HURRICANE ZONE" (HVHZ).
2. PRODUCT ANCHORS SHALL BE AS LISTED AND SPACED AS SHOWN ON DETAILS. ANCHOR EMBEDMENT TO BASE MATERIAL SHALL BE BEYOND WALL DRESSING OR STUCCO.
3. WHEN USED IN THE "HIGH VELOCITY HURRICANE ZONE" (HVHZ) THIS PRODUCT IS REQUIRED TO BE PROTECTED WITH AN IMPACT RESISTANT COVERING THAT COMPLIES WITH SECTION 1626 OF THE FLORIDA BUILDING CODE.
4. FOR 2X STUD FRAMING CONSTRUCTION, THE ANCHORING OF THESE UNITS SHALL BE THE SAME AS THAT SHOWN FOR 2X BUCK MASONRY CONSTRUCTION.
5. CONDITIONS NOT COVERED BY THIS DRAWING ARE SUBJECT TO FURTHER ENGINEERING ANALYSIS.
6. WOOD BUCKS BY OTHERS, MUST BE ANCHORED PROPERLY TO TRANSFER LOADS TO STRUCTURE AND TO BE REVIEWED BY BUILDING OFFICIAL.
7. FOR DESIGN PRESSURE RATING SEE CHART THIS SHEET.
8. THIS PRODUCT MEETS THE WATER REQUIREMENTS FOR HIGH VELOCITY HURRICANE ZONES.

TABLE OF CONTENTS

SHEET #	DESCRIPTION
1	TYPICAL ELEVATIONS, DESIGN PRESSURE & GENERAL NOTES
2	600 SERIES WINDOW SECTIONS & DETAILS
3	601 SERIES WINDOW SECTIONS & DETAILS
4	602 SERIES WINDOW SECTIONS & DETAILS
5	603 SERIES WINDOW SECTIONS & DETAILS
6	604 SERIES WINDOW SECTIONS & DETAILS
7	ANCHORING WITH CONCRETE OR SHEET METAL SCREWS
8	ANCHORING WITH WOOD SCREWS
9	COMPONENTS
10	BILL OF MATERIALS, COMPONENTS & GLAZING DETAILS

DESIGN PRESSURE RATINGS (PSF)

MODEL	OVERALL FRAME DIMENSION	OVERALL DAYLIGHT DIMENSION	GLASS TYPE	ASTM E1300-98/00 WHEN WATER INFILTRATION REQ'D		ASTM E1300-98/00 WHEN WATER INFILTRATION NOT REQ'D	
600	47.50" X 43.50"	(O) 19.62" X 33.78" (X) 16.14" X 30.18"	1/4" TEMP.	+41.6	-41.6	+75.0	-75.0
601	47.50" X 58.50"	(O) 19.62" X 33.78" (X) 16.14" X 30.18"		+41.6	-41.6	+75.0	-75.0
602	47.50" X 60.50"	(O) 19.62" X 33.78" (X) 16.14" X 30.18"	-AIR-	+41.6	-41.6	+75.0	-75.0
603	47.50" X 58.50"	(O) 41.49" X 37.78"	1/4" TEMP.	+41.6	-41.6	+75.0	-75.0
604	47.50" X 60.50"	(O) 41.49" X 37.78"		+41.6	-41.6	+75.0	-75.0

Approved as complying with the Florida Building Code
Date FEB. 16, 2006
NOA# 05-0719.04
Miami Dade Product Control Division
By

Documents Prepared By:
RW BUILDING CONSULTANTS, INC.
P.O. Box 230 Valrico FL. 33595
Phone No.: 813.659.9197
Florida Board of Professional Engineers
Certificate Of Authorization No. 9813
Wendell W. Haney, P.E. No. 54158
1-26-06

PRODUCT: READY ACCESS DRIVE THROUGH WINDOW "NON-IMPACT"
PART OR ASSEMBLY: TYPICAL ELEVATIONS, DESIGN PRESSURE & GENERAL NOTES

REVISIONS

NO.	DATE	BY
3	01/24/06	REVISE PER DADE LETTER	EW
2	12/15/05	ADDED GLASS BITE DIMENSION	WH
1	08/24/05	REVISE PER DADE LETTER	EW

DATE: 06/16/05
SCALE: N.T.S.
DWG. BY: AEM
CHK. BY: WWH
DRAWING NO.: S-2553
SHEET 1 OF 10

\\Rwbcsrv\rwbc\proj 650 - 800\pf709\S-2553 REV3\S-2553-1-R1.dwg

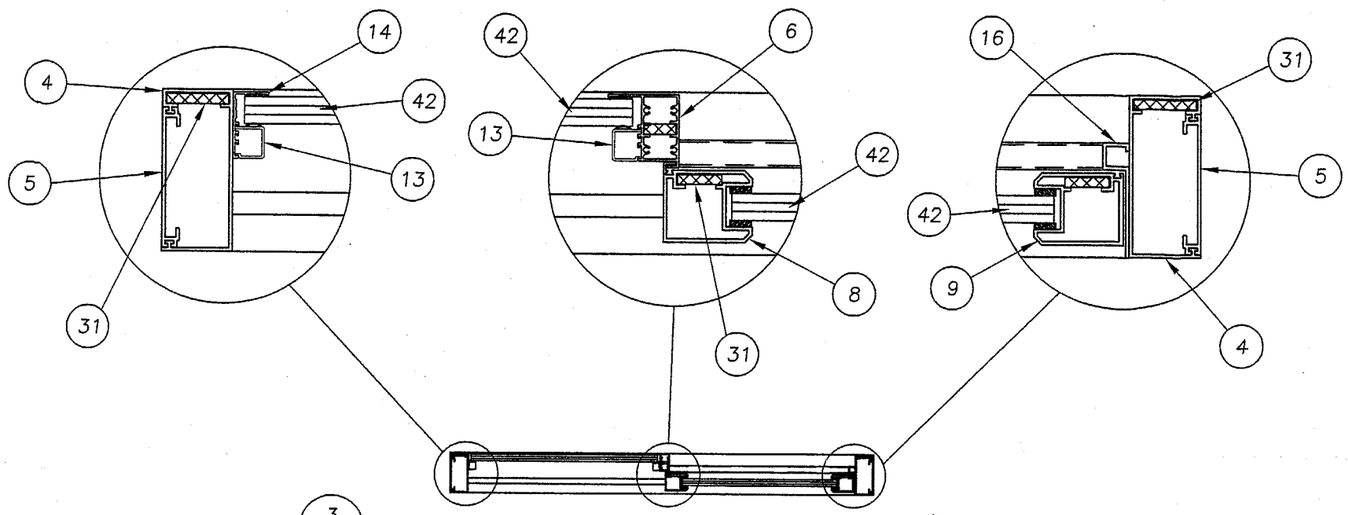

3/2

1/2 HORIZONTAL SECTION VIEW

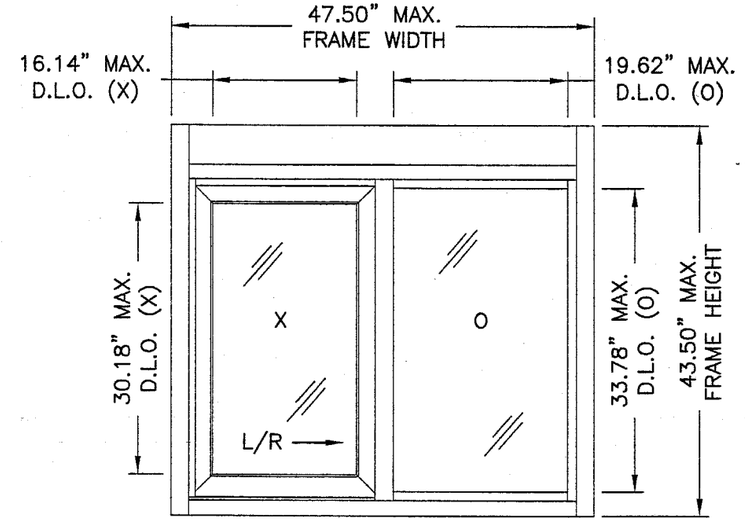

600 SERIES WINDOW

EXTERIOR VIEW

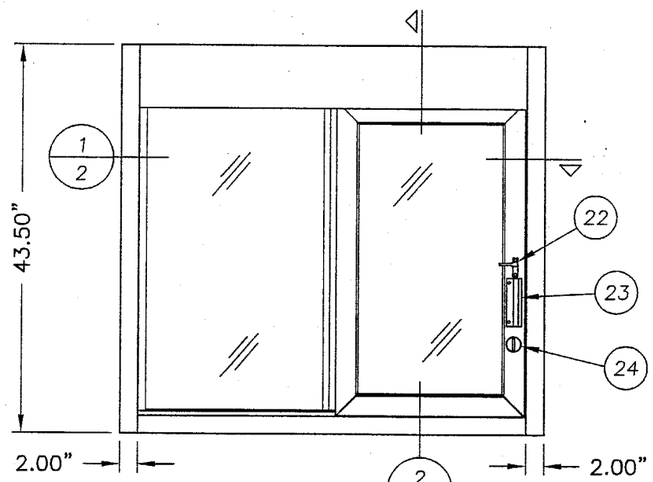

2/2

3/2 INTERIOR VIEW

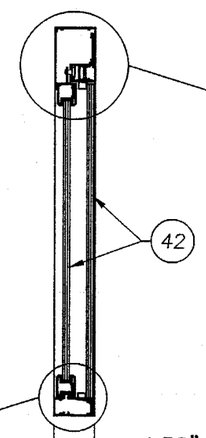

2/2 VERTICAL SECTION VIEW

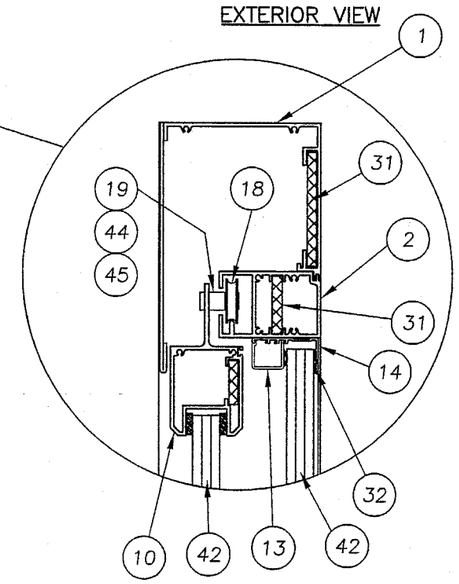

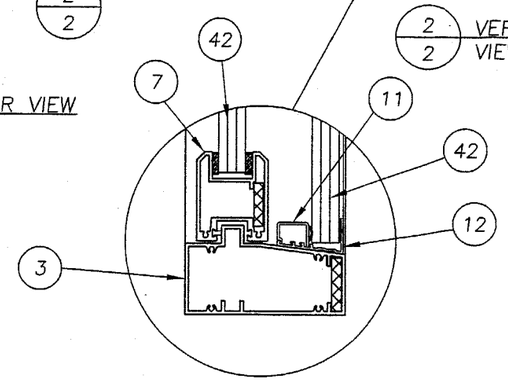

Approved as complying with the Florida Building Code
Date FEB. 16, 2006
NOA# 05-0719.04
Miami Dade Product Control Division
By Manuel Perez

Documents Prepared By:
RW BUILDING CONSULTANTS, INC.
P.O. Box 230 Valrico FL. 33595
Phone No.: 813.659.9197
Florida Board of Professional Engineers
Certificate Of Authorization No. 9813
Wendell W. Haney, P.E. No. 54158
1-26-06

PRODUCT: READY ACCESS DRIVE THROUGH WINDOW "NON-IMPACT"

PART OR ASSEMBLY: 600 SERIES WINDOW SECTIONS & DETAILS

REVISIONS

NO.	DATE		BY
3	01/24/06	REVISE PER DADE LETTER	EW
2	12/15/05	ADDED GLASS BITE DIMENSION	WH
1	08/24/05	REVISE PER DADE LETTER	EW

DATE: 06/16/05
SCALE: N.T.S.
DWG. BY: AEM
CHK. BY: WWH
DRAWING NO.: S-2553
SHEET 2 OF 10

\\Rwbcsrv\rwbc\proj 650 - 800\pf709\S-2553 REV3\S-2553-2-R1.dwg

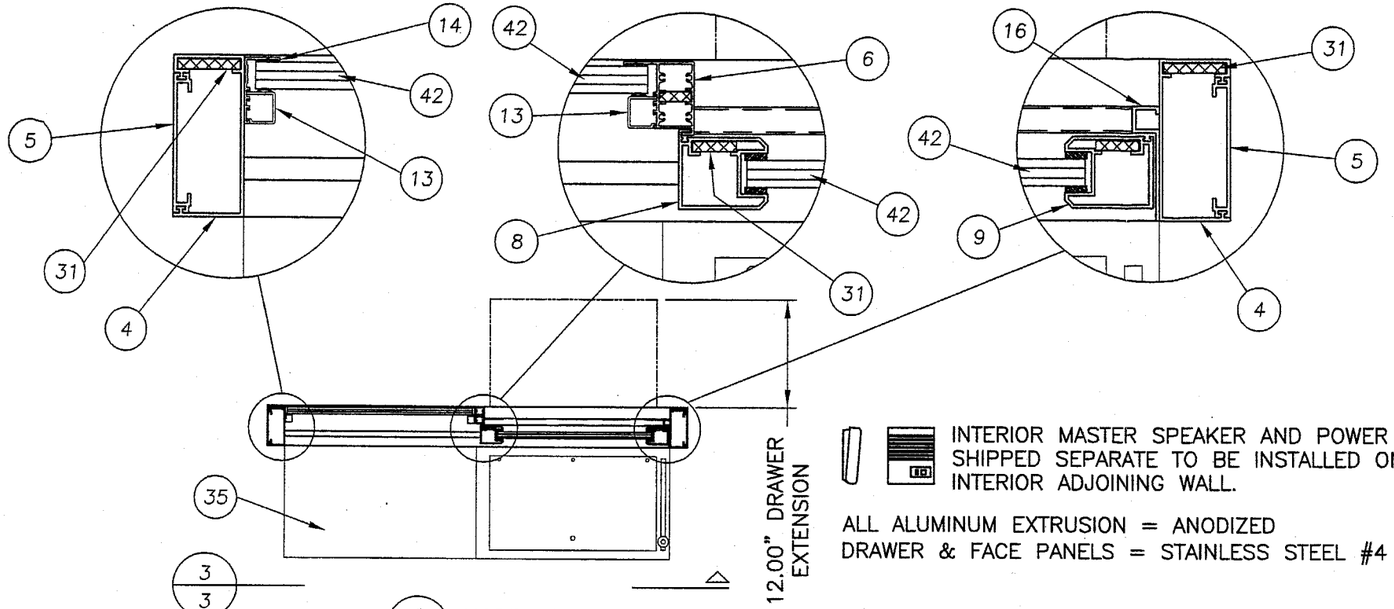

3/3

1/3 HORIZONTAL SECTION VIEW

INTERIOR MASTER SPEAKER AND POWER SUPPLY SHIPPED SEPARATE TO BE INSTALLED ON INTERIOR ADJOINING WALL.

ALL ALUMINUM EXTRUSION = ANODIZED
DRAWER & FACE PANELS = STAINLESS STEEL #4 FINISH

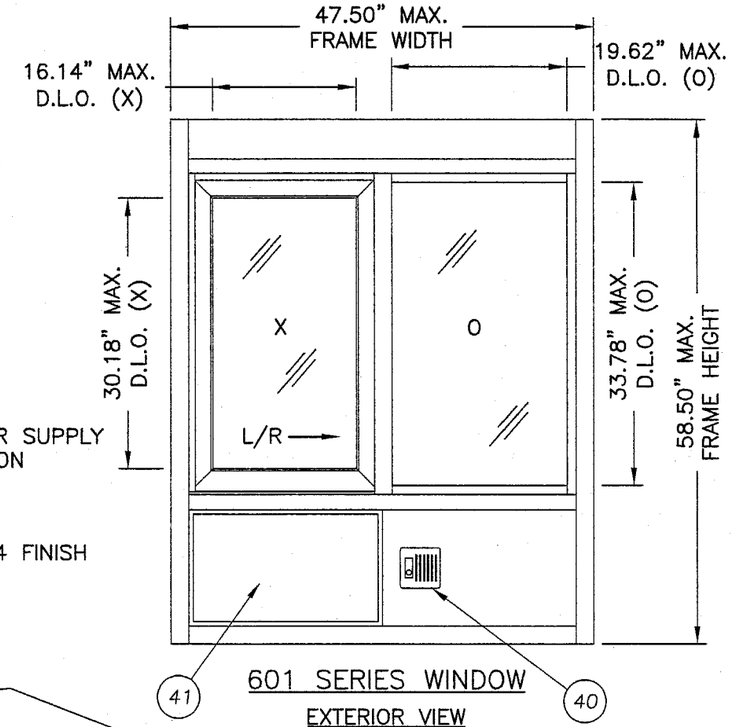

601 SERIES WINDOW
EXTERIOR VIEW

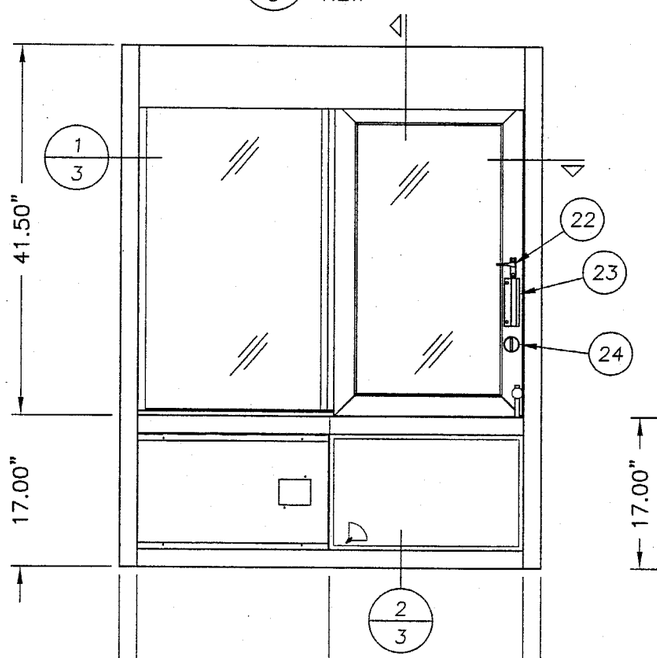

3/3 INTERIOR VIEW

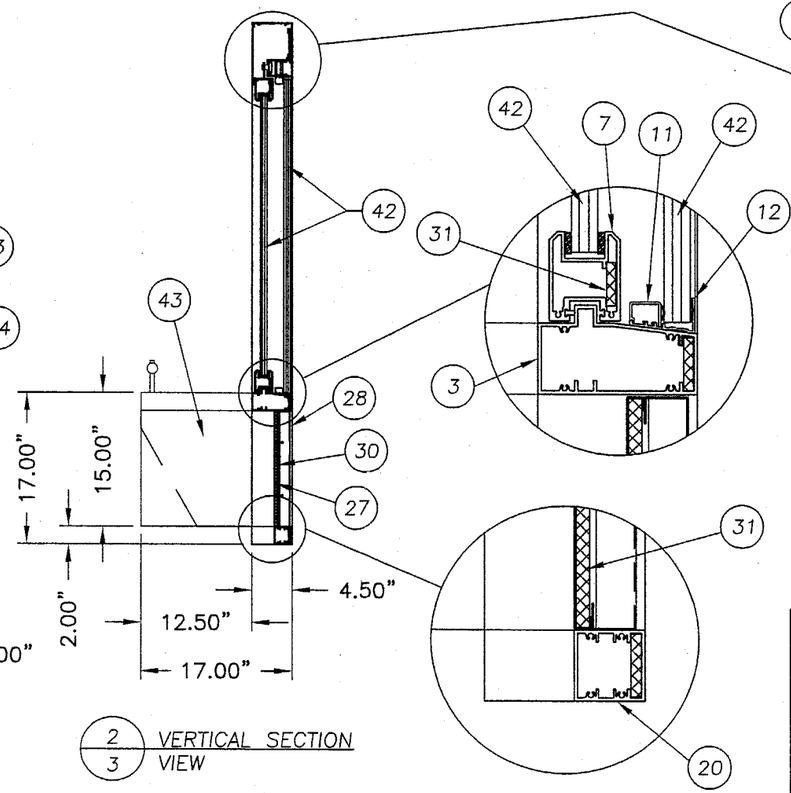

2/3 VERTICAL SECTION VIEW

Approved as complying with the Florida Building Code
Date FEB. 16, 2006
NOA# 05-0715.04
Miami Dade Product Control Division
By Maurice Berry

Documents Prepared By:
RW BUILDING CONSULTANTS, INC.
P.O. Box 230 Valrico FL. 33595
Phone No.: 813.659.9197
Florida Board of Professional Engineers
Certificate of Authorization No. 9813
Wendell W. Haney, P.E. No. 54158
1-26-06

PRODUCT: READY ACCESS DRIVE THROUGH WINDOW "NON-IMPACT"

PART OR ASSEMBLY: 601 SERIES WINDOW SECTIONS & DETAILS

REVISIONS

NO.	DATE		BY
3	01/24/06	REVISE PER DADE LETTER	EW
2	12/15/05	ADDED GLASS BITE DIMENSION	WH
1	08/24/05	REVISE PER DADE LETTER	EW

DATE: 06/16/05
SCALE: N.T.S.
DWG. BY: AEM
CHK. BY: WWH
DRAWING NO.: S-2553
SHEET 3 OF 10

\\Rwbcsrv\rwbc\proj 650 - 800\pf709\S-2553 REV3\S-2553-3-R1.dwg

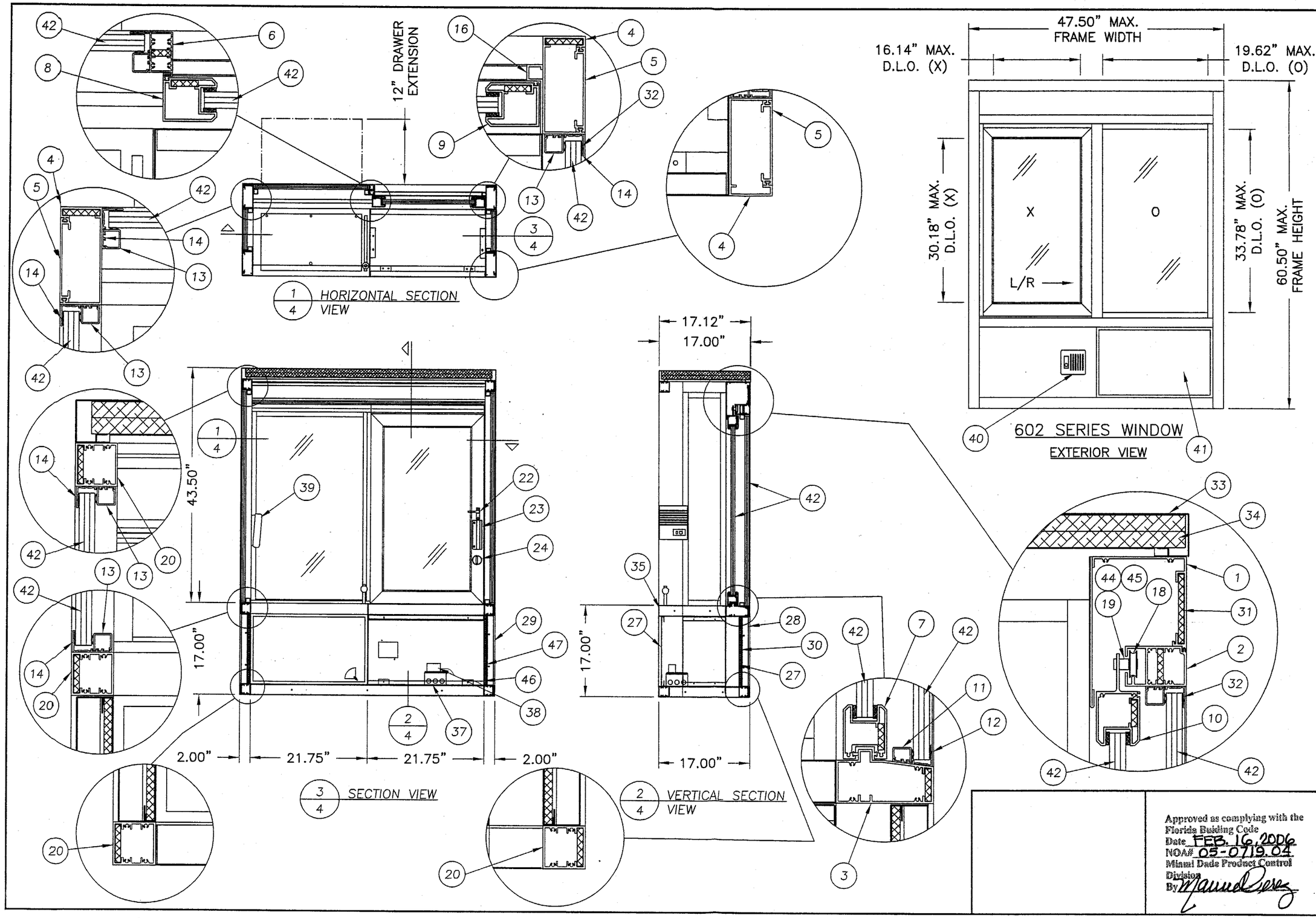

Documents Prepared By:
RW BUILDING CONSULTANTS, INC.
P.O. Box 230 Valrico FL. 33595
Phone No.: 813.659.9197
Florida Board of Professional Engineers
Certificate Of Authorization No. 9813
Wendell W. Haney, P.E. No. 54158
1-26-06

PRODUCT: READY ACCESS DRIVE THROUGH WINDOW "NON-IMPACT"

PART OR ASSEMBLY: 602 SERIES WINDOW SECTIONS & DETAILS

REVISIONS

NO.	DATE		BY
3	01/24/06	REVISE PER DADE LETTER	EW
2	12/15/05	ADDED GLASS BITE DIMENSION	WH
1	08/24/05	REVISE PER DADE LETTER	EW

Approved as complying with the Florida Building Code
Date FEB. 16, 2006
NOA# 05-0719.04
Miami Dade Product Control Division
By Manuel Perez

DATE: 06/16/05
SCALE: N.T.S.
DWG. BY: AEM
CHK. BY: WWH
DRAWING NO.: S-2553
SHEET 4 OF 10

\\Rwbcsrv\rwbc\proj 650 - 800\pf709\S-2553 REV3\S-2553-4-R1.dwg

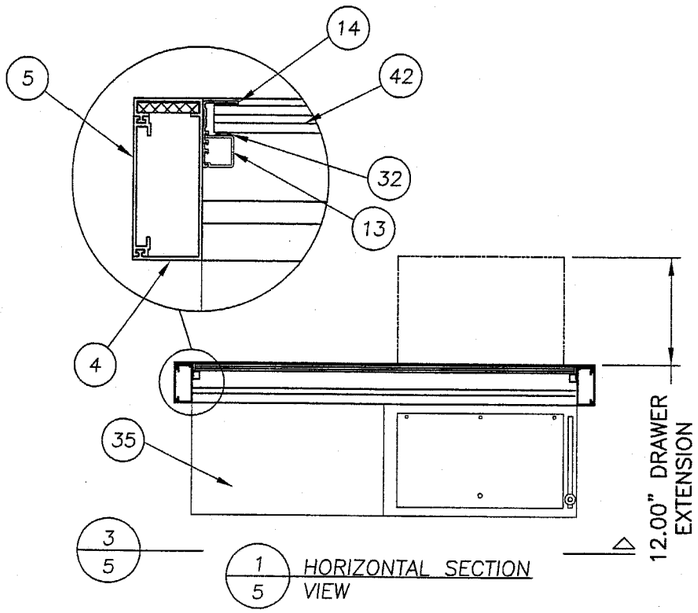

INTERIOR MASTER SPEAKER AND POWER SUPPLY SHIPPED SEPARATE TO BE INSTALLED ON INTERIOR ADJOINING WALL.

ALL ALUMINUM EXTRUSION = ANODIZED
DRAWER & FACE PANELS = STAINLESS STEEL #4 FINISH

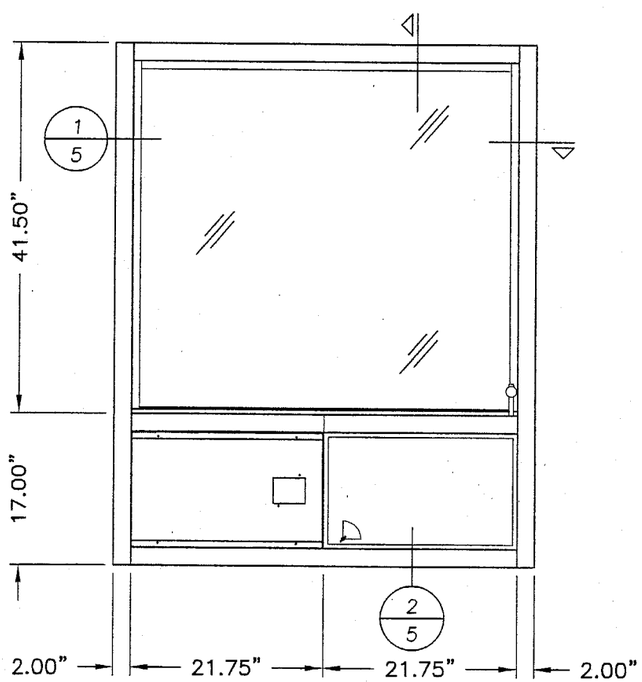

3/5 INTERIOR VIEW

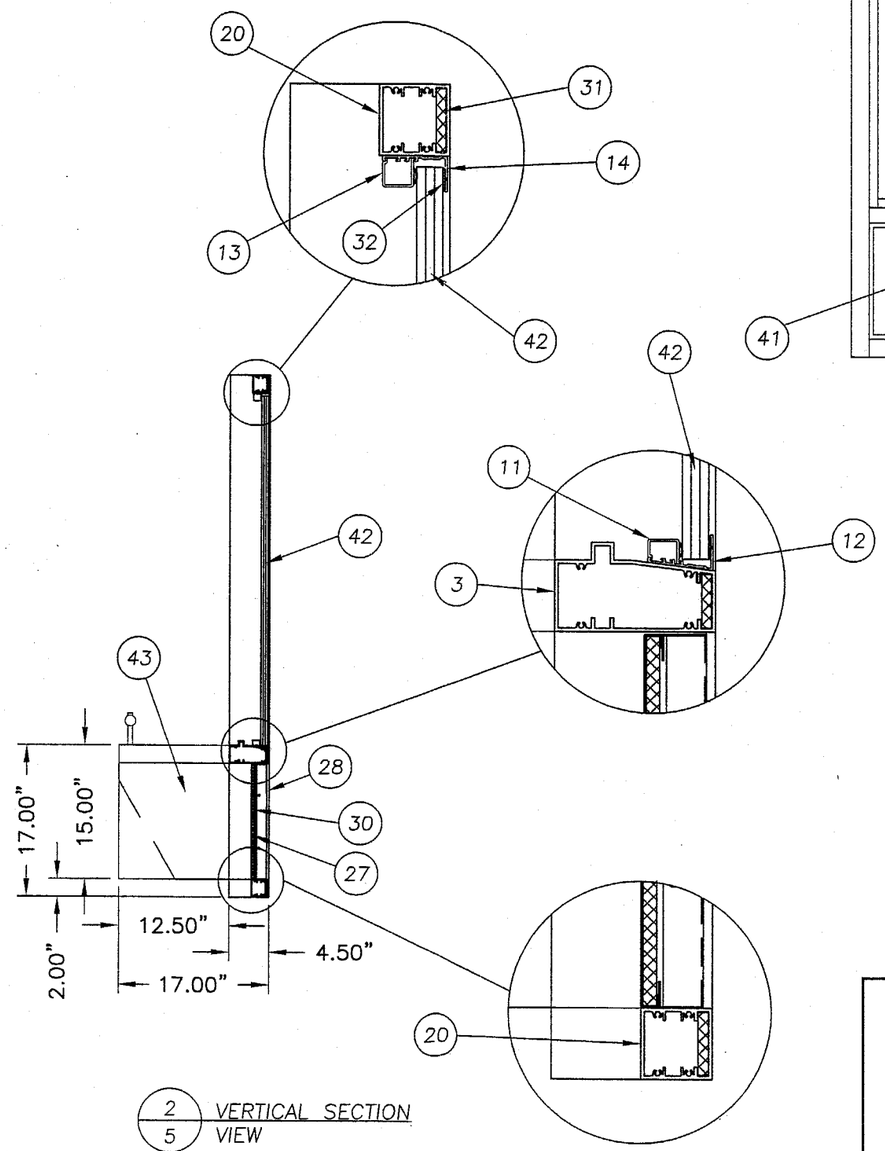

2/5 VERTICAL SECTION VIEW

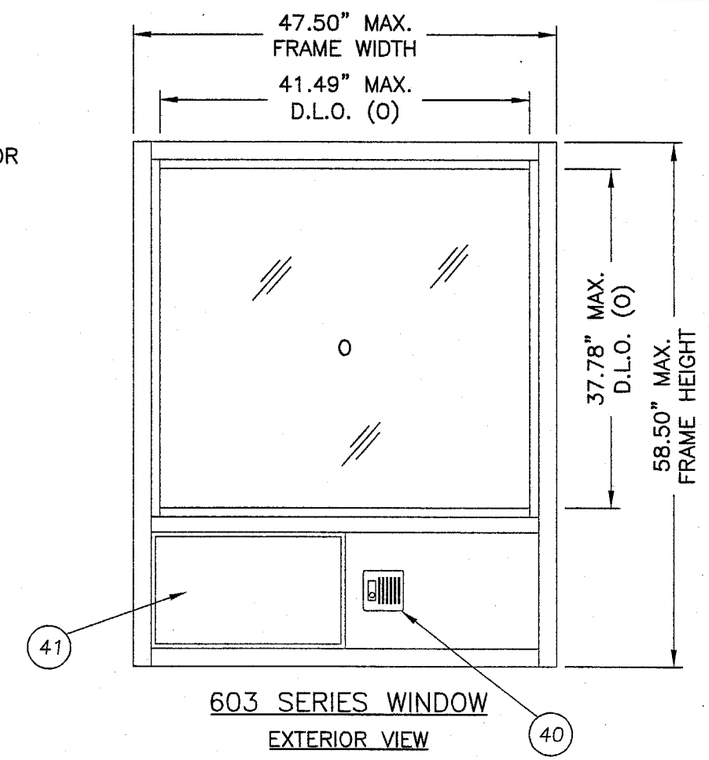

603 SERIES WINDOW

EXTERIOR VIEW

Approved as complying with the Florida Building Code
Date FEB. 16, 2006
NOA# 05-0719.04
Miami Dade Product Control Division
By Manuel Perez

Documents Prepared By:
RW BUILDING CONSULTANTS, INC.
P.O. Box 230 Valrico FL. 33595
Phone No.: 813.659.9197
Florida Board of Professional Engineers
Certificate Of Authorization No. 9813
Wendell W. Haney, P.E. No. 54158
1-26-06

PRODUCT: READY ACCESS DRIVE THROUGH WINDOW "NON-IMPACT"

PART OR ASSEMBLY: 603 SERIES WINDOW SECTIONS & DETAILS

REVISIONS

NO.	DATE		BY
3	01/24/06	REVISE PER DADE LETTER	EW
2	12/15/05	ADDED GLASS BITE DIMENSION	WH
1	08/24/05	REVISE PER DADE LETTER	EW

DATE: 06/16/05
SCALE: N.T.S.
DWG. BY: AEM
CHK. BY: WWH
DRAWING NO.: S-2553
SHEET 5 OF 10

\\Rwbcsrv\rwbc\proj 650 - 800\pf709\S-2553 REV3\S-2553-5-R1.dwg

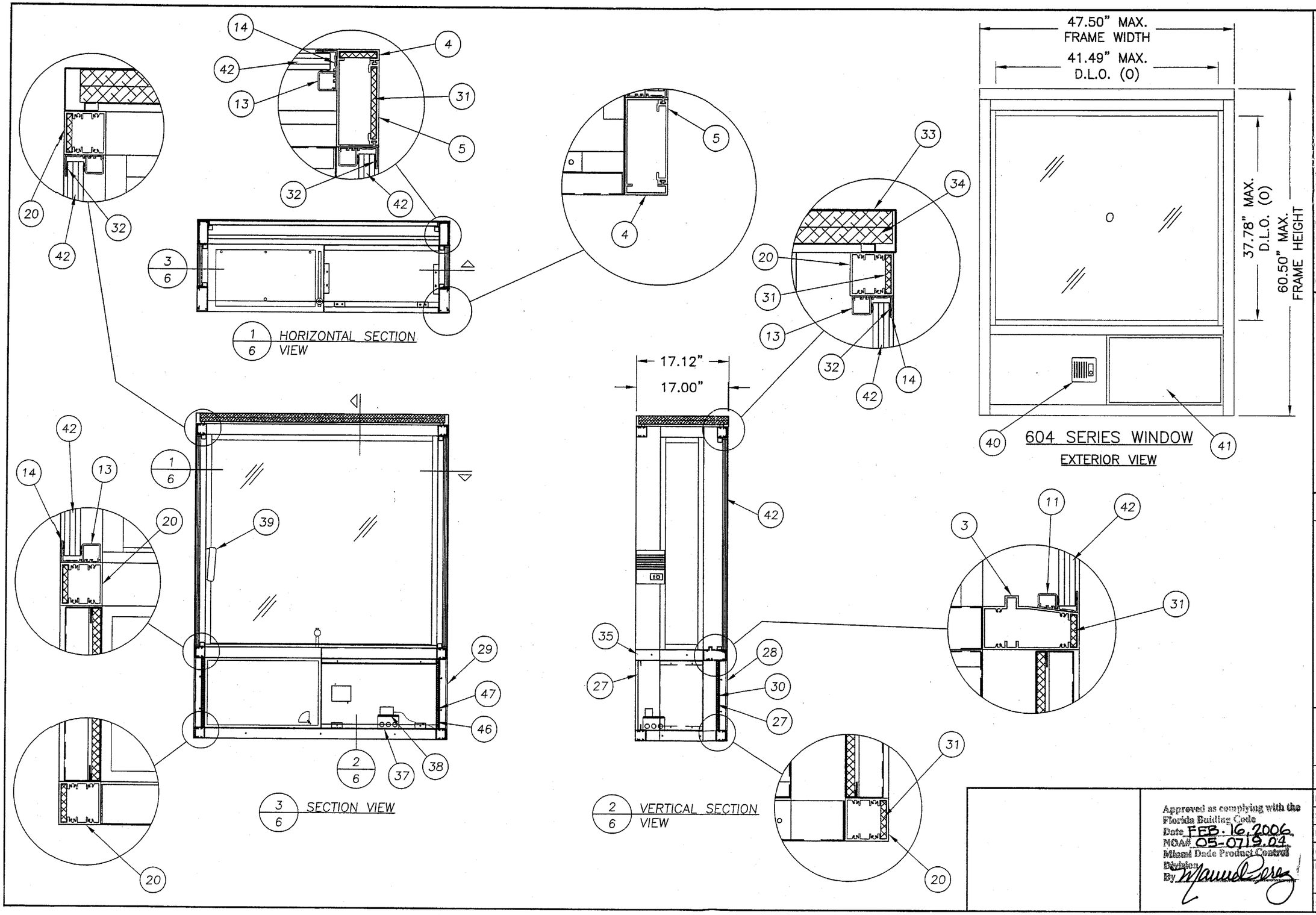

Approved as complying with the Florida Building Code
Date FEB. 16, 2006
NOA# 05-0719.04
Miami Dade Product Control Division
By Manuel Perez

Documents Prepared By:
RWB BUILDING CONSULTANTS, INC.
P.O. Box 230 Valrico FL. 33595
Phone No.: 813.659.9197
Florida Board of Professional Engineers
Certificate Of Authorization No. 9813
Wendell W. Haney, P.E. No. 54158
1-26-06

PRODUCT: READY ACCESS DRIVE THROUGH WINDOW "NON-IMPACT"

PART OR ASSEMBLY: 604 SERIES WINDOW SECTIONS & DETAILS

REVISIONS

NO.	DATE	BY
3	01/24/06	EW
2	12/15/05	WH
1	08/24/05	EW

REVISE PER DADE LETTER
ADDED GLASS BITE DIMENSION
REVISE PER DADE LETTER

DATE: 06/16/05
SCALE: N.T.S.
DWG. BY: AEM
CHK. BY: WWH
DRAWING NO.: S-2553
SHEET 6 OF 10

\\Rwbcsrv\rwbc\proj 650 - 800\pf709\S-2553 REV3\S-2553-6-R1.dwg

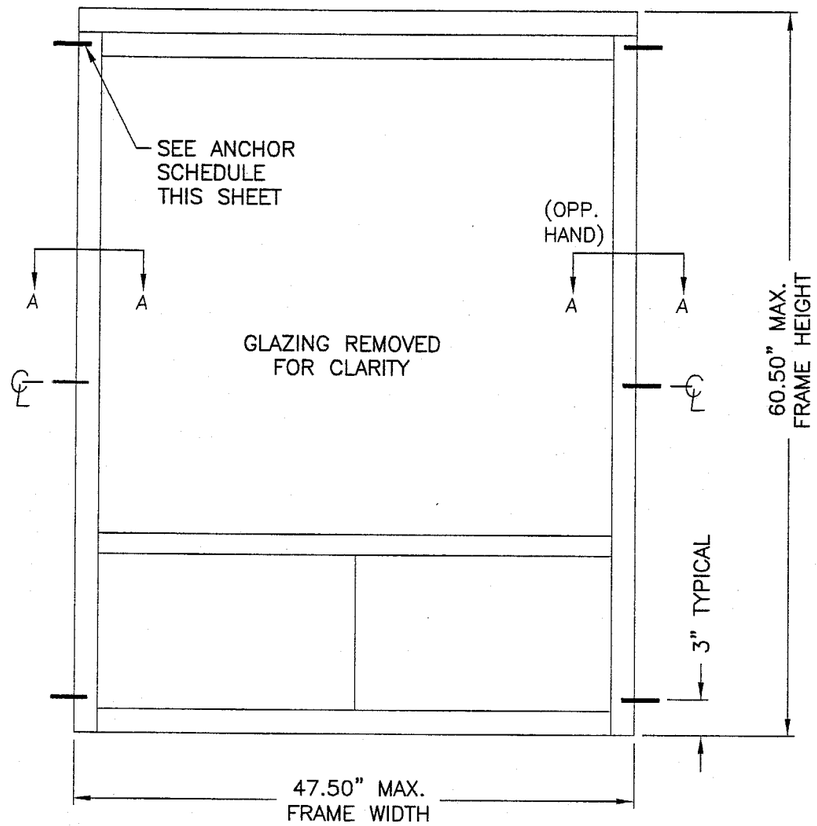

603 AND 604 SERIES WINDOW

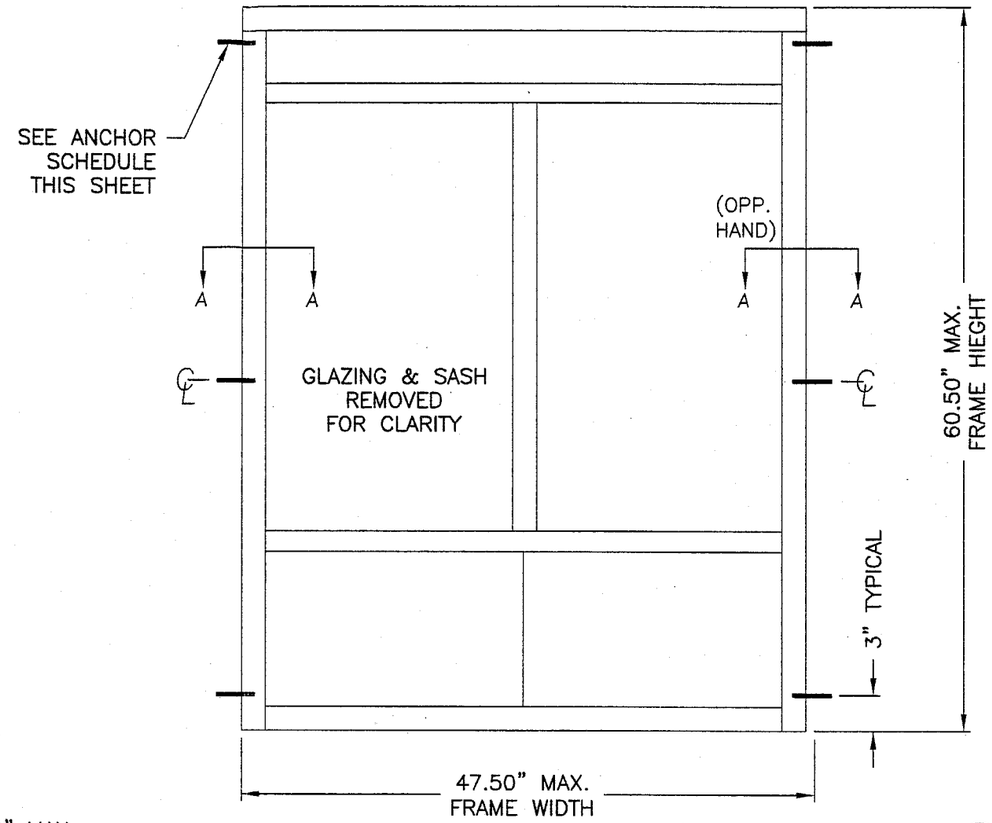

601 AND 602 SERIES WINDOW

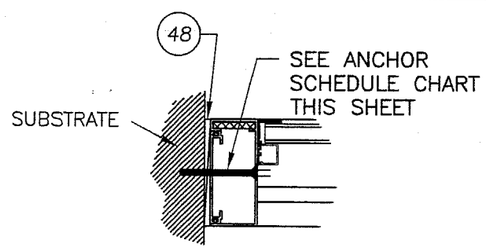

SECTION AA
FIXED WINDOW PANEL

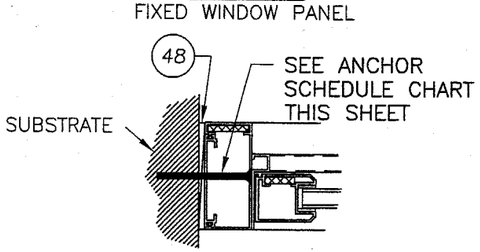

SECTION AA
ACTIVE WINDOW PANEL

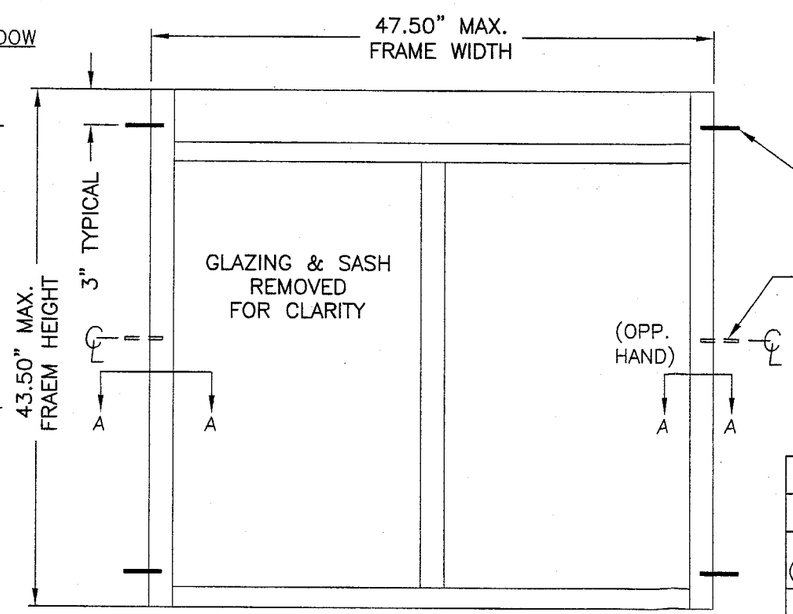

600 SERIES WINDOW

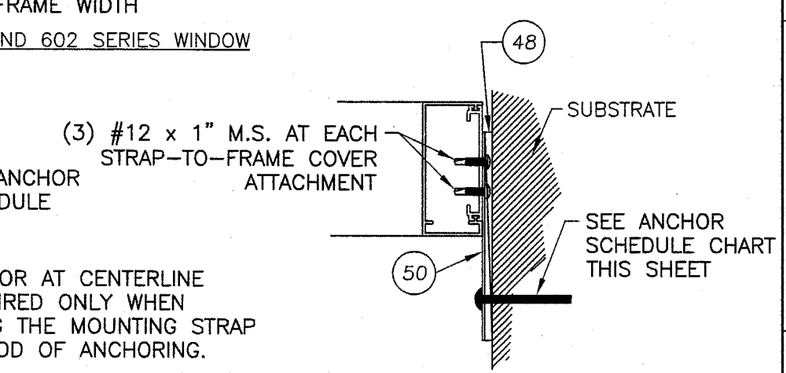

SECTION AA
USING MOUNTING STRAP

ANCHOR SCHEDULE		
SUBSTRATE	ANCHOR	MINIMUM PENETRATION INTO SUBSTRATE
STEEL (16 ga. MIN)	1/4" SHEET METAL SCREW	MIN. PROTRUSION OF 2 THREADS BEYOND FULL ENGAGEMENT
CONCRETE	1/4" DIAMETER CONCRETE SCREW	1.25" INTO CONCRETE

Approved as complying with the Florida Building Code
Date FEB. 16, 2006
NOA# 05-0119.04
Miami Dade Product Control Division
By: Manuel Perez

Documents Prepared By:
RW BUILDING CONSULTANTS, INC.
P.O. Box 230 Valrico FL. 33595
Phone No.: 813.659.9197
Florida Board of Professional Engineers
Certificate Of Authorization No. 9813
Wendell W. Honey, P.E. No 54158
1-26-06

PRODUCT: READY ACCESS DRIVE THROUGH WINDOW "NON-IMPACT"

PART OR ASSEMBLY: ANCHORING WITH CONC. OR SHEET METAL SCREWS

NO.	DATE	REVISIONS	BY
3	01/24/06	REVISE PER DADE LETTER	EW
2	12/15/05	ADDED GLASS BITE DIMENSION	WH
1	08/24/05	REVISE PER DADE LETTER	EW

DATE: 06/16/05
SCALE: N.T.S.
DWG. BY: AEM
CHK. BY: WWH
DRAWING NO.: S-2553
SHEET 7 OF 10

\\Rwbcsrv\rwbc\proj 650 - 800\pf709\S-2553 REV3\S-2553-7-R1.dwg

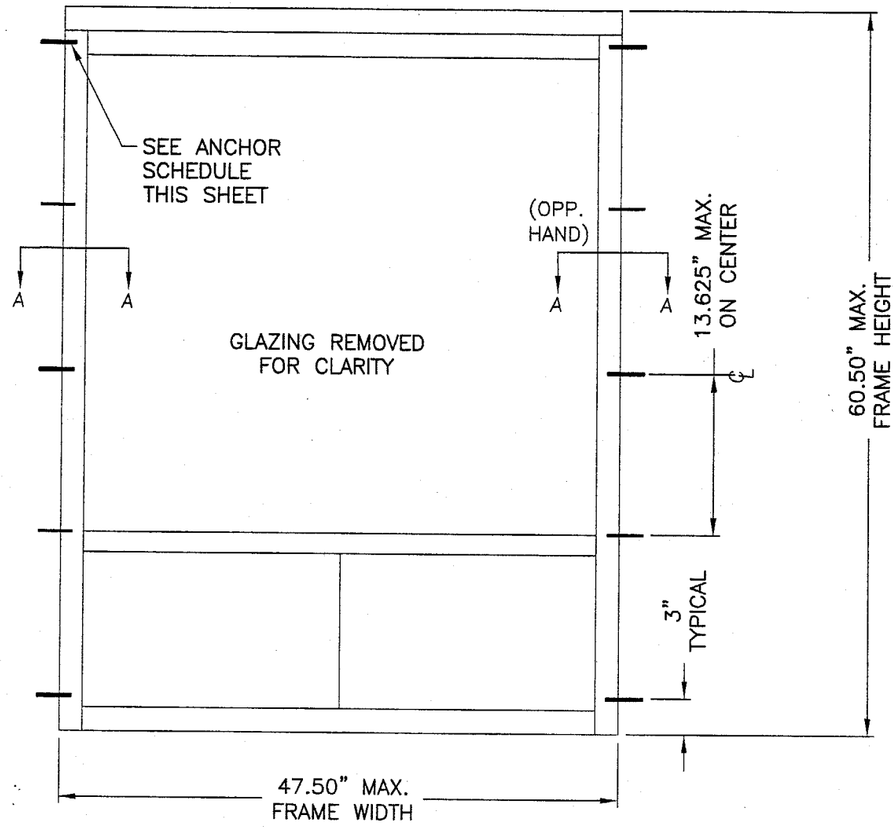

603 AND 604 SERIES WINDOW

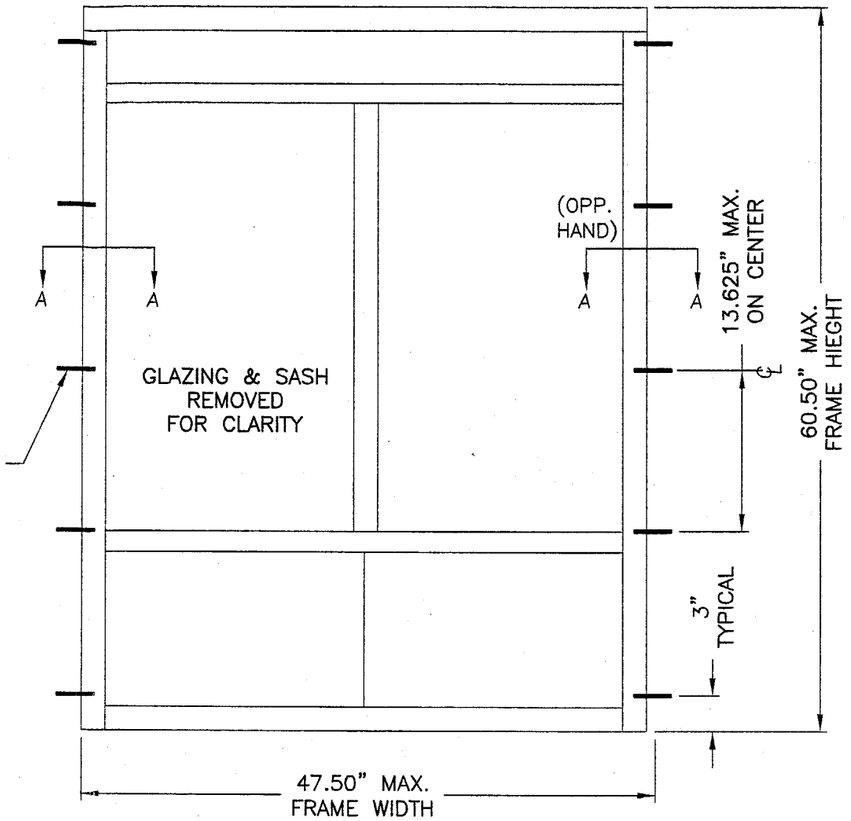

601 AND 602 SERIES WINDOW

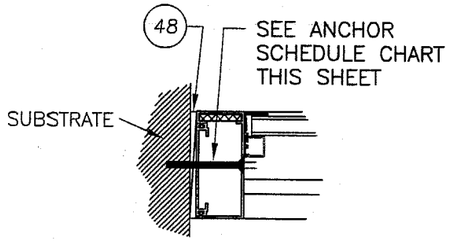

SECTION AA
FIXED WINDOW PANEL

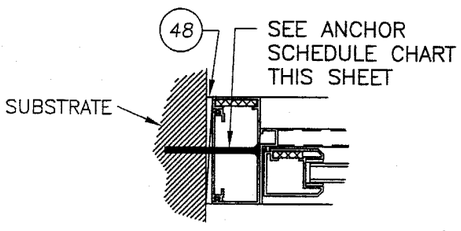

SECTION AA
ACTIVE WINDOW PANEL

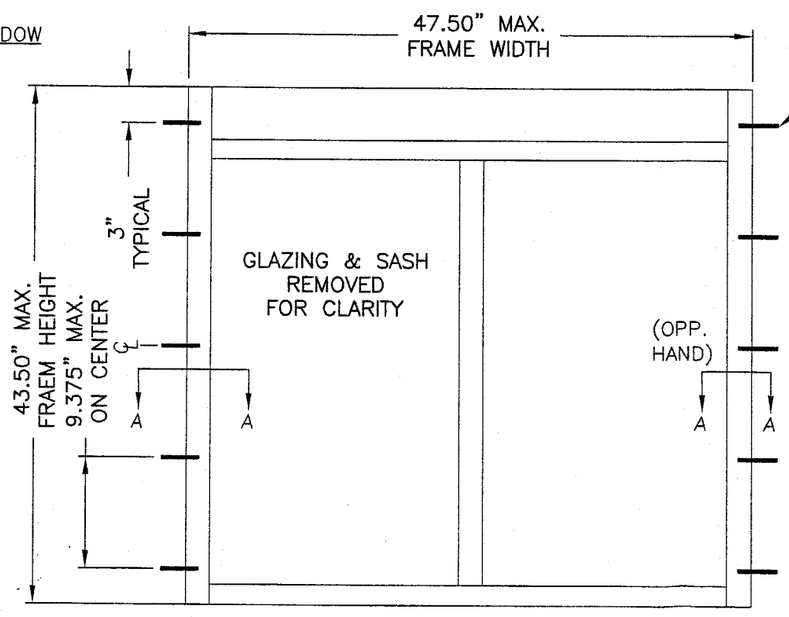

600 SERIES WINDOW

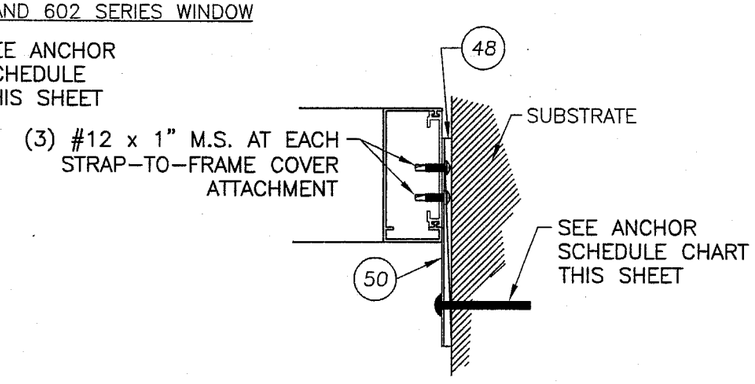

SECTION AA
USING MOUNTING STRAP

ANCHOR SCHEDULE		
SUBSTRATE	ANCHOR	MINIMUM PENETRATION INTO SUBSTRATE
WOOD BUCK	#14 WOOD SCREW	1.50" INTO WOOD (REQUIRES DOUBLE 2X BUCK)

Approved as complying with the Florida Building Code
Date FEB 16, 2006
NOA# 05-0719.04
Miami Dade Product Control Division
By: [illegible]

Documents Prepared By:
RW BUILDING CONSULTANTS, INC.
P.O. Box 230 Valrico FL. 33595
Phone No.: 813.659.9197
Florida Board of Professional Engineers
Certificate Of Authorization No. 9813
Wendell W. Harley, P.E. No. 54158
1-26-06

PRODUCT: READY ACCESS DRIVE THROUGH WINDOW "NON-IMPACT"
PART OR ASSEMBLY: ANCHORING WITH WOOD SCREWS

REVISIONS

NO.	DATE		BY
3	01/24/06	REVISE PER DADE LETTER	EW
2	12/15/05	ADDED GLASS BITE DIMENSION	WH
1	08/24/05	REVISE PER DADE LETTER	EW

DATE: 06/16/05
SCALE: N.T.S.
DWG. BY: AEM
CHK. BY: WWH
DRAWING NO.: S-2553
SHEET 8 OF 10

\\Rwbcsrv\rwbc\proj 650 - 800\pf709\S-2553 REV3\S-2553-8-R1.dwg

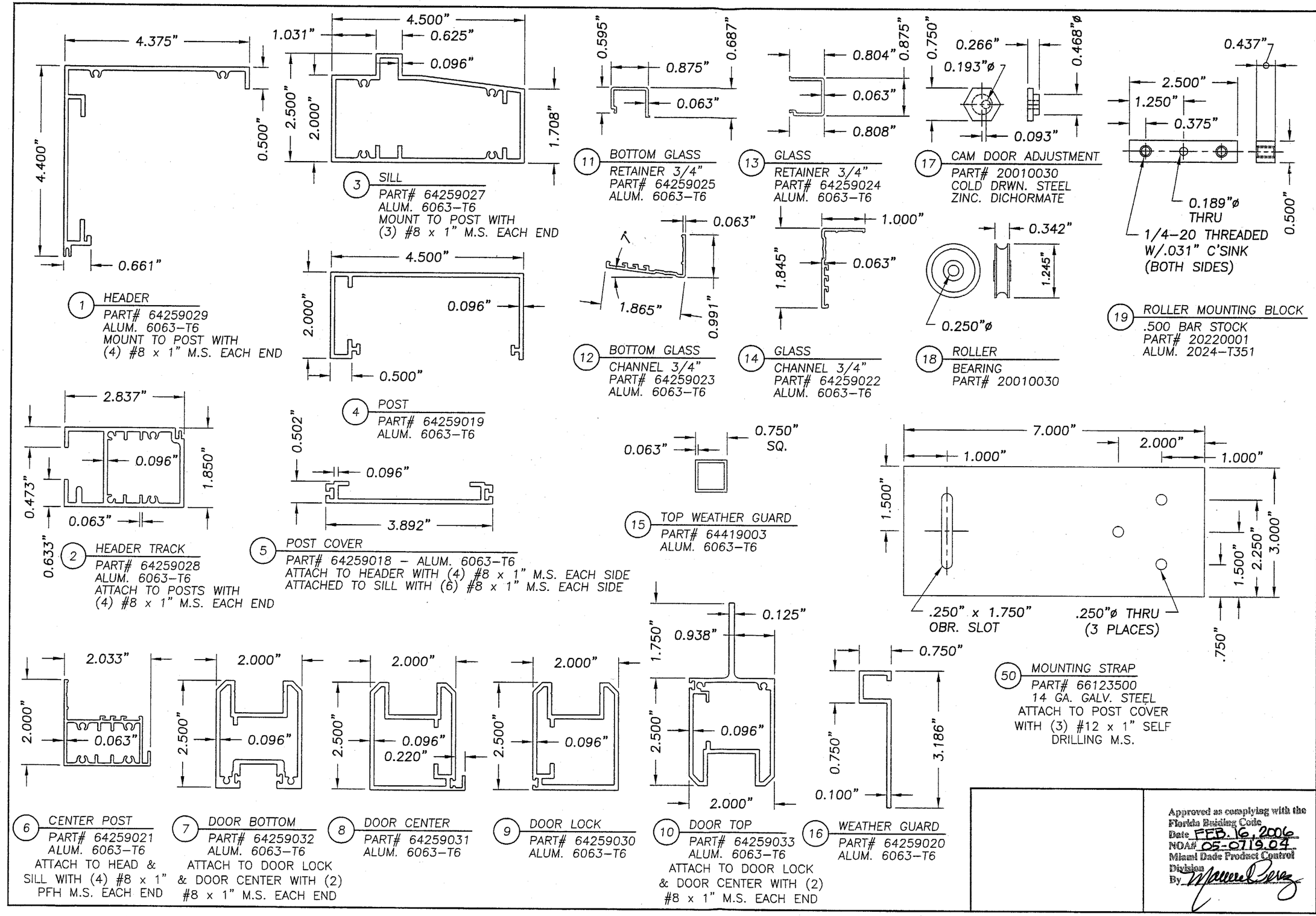

Approved as complying with the Florida Building Code
Date FEB. 16, 2006
NOA# 05-0719.04
Miami Dade Product Control Division
By

Documents Prepared By:
RW BUILDING CONSULTANTS, INC.
P.O. Box 230 Valrico FL. 33595
Phone No.: 813.659.9197
Florida Board of Professional Engineers
Certificate Of Authorization No. 9813
Wendell W. Haney, P.E. No. 54158
1-26-06

PRODUCT: READY ACCESS DRIVE THROUGH WINDOW "NON-IMPACT"

PART OR ASSEMBLY: COMPONENTS

NO.	DATE		BY
3	01/24/06	REVISE PER DADE LETTER	EW
2	12/15/05	ADDED GLASS BITE DIMENSION	WH
1	08/24/05	REVISE PER DADE LETTER	EW

REVISIONS

DATE: 06/16/05
SCALE: N.T.S.
DWG. BY: AEM
CHK. BY: WWH
DRAWING NO.: S-2553
SHEET 9 OF 10

\\Rwbcsrv\rwbc\proj 650 - 800\pf709\S-2553 REV3\S-2553-9-R1.DWG

ITEM	DESCRIPTION	MATERIAL
1	HEADER PART# 64259029 ALUM. 6063–T6	ALUM.
2	HEADER TRACK PART# 64259028 ALUM. 6063–T6	ALUM.
3	SILL PART# 64259027 ALUM. 6063–T6	ALUM.
4	POST PART# 64259019 ALUM. 6063–T6	ALUM.
5	POST COVER PART# 64259018 ALUM. 6063–T6	ALUM.
6	CENTER POST PART# 64259021 ALUM. 6063–T6	ALUM.
7	DOOR BOTTOM PART# 64259032 ALUM. 6063–T6	ALUM.
8	DOOR CENTER PART# 64259031 ALUM. 6063–T6	ALUM.
9	DOOR LOCK PART# 64259030 ALUM. 6063–T6	ALUM.
10	DOOR TOP PART# 64259033 ALUM. 6063–T6	ALUM.
11	GLASS RETAINER (3/4") PART# 64259025 ALUM. 6063–T6	ALUM.
12	BOTTOM GLASS CHANNEL (3/4") PART# 64259023 ALUM. 6063–T6	ALUM.
13	GLASS RETAINER (3/4") PART# 64259024 ALUM. 6063–T6	ALUM.
14	GLASS CHANNEL (3/4") PART# 64259022 ALUM. 6063–T6	ALUM.
15	TOP WEATHER GUARD PART# 64419003 ALUM. 6063–T6	ALUM.
16	WEATHER GUARD PART# 64259020 ALUM. 6063–T6	ALUM.
17	CAM DOOR ADJUSTMENT PART# 00651433 STEEL ZINC.	STEEL
18	ROLLER TRACK BEARING PART# 20010030 (SAE S2100)	STEEL
19	ROLLER MOUNTING BLOCK PART# 20220001 ALUM. 2024–T351	TPS
20	CROSS FRAME PART# 64259025 ALUM. 6063–T6	ALUM.
21	SILICONE GLAZING SEALANT DOW 999–A PART# 80050020	SILICONE
22	SELF–LATCHING THUMB TURN PART# 20090081	STEEL
23	PULL HANDLE PART# 65103300	STEEL
24	THUMB TURN DEADBOLT PART# 20090086	STEEL
25	GLAZING FOAM TAPE PART# 20200166	BUTYL
26	RUBBER SEAL "D" SHAPPED PART# 40040004	EPDM
27	INSIDE FACE PANEL PART# 66121200 (18 ga 304 Stainless)	ST. ST'L
28	OUTSIDE FRONT FACE PANEL PART# 56121100 (18 ga 304 Stainless)	ST. ST'L
29	OUTSIDE SIDE FACE PANEL PART# 66120900 (18 ga 304 Stainless)	ST. ST'L
30	ARMOR PANEL (LUMAGARD 0.420" THK AG300)	COMPOSITE
31	ARMOR STRIP (LUMAGARD 0.420" THK AG300)	COMPOSITE
32	GLAZING TAPE 1/2" X .063" PART# 202001155	BUTYL
33	TOP CAP PART# 6122500 (18 ga 304 Stainless)	ST. ST'L
34	INSULATION PANEL (CEILING TILE, 5/8" THK)	CELLULOUS
35	COUNTER PART# 96120500	ST. ST'L
36	NOT USED	–
37	4X4 GANG BOX	–
38	SPEAKER POWER SUPPLY	–
39	INSIDE MASTER SPEAKER	–
40	OUTSIDE SPEAKER W/HOOKUP WIRE PRE INSTALLED PART# 20110021	–
41	PASS– THRU DRAWER PART# 96130000	–
42	3/4" INSULATED GLASS 1/4" TEMP. – AIR – 1/4" TEMP.	GLASS
43	ANGLED SHELF BRACKET (18 ga 304 Stainless)	ST. ST'L
44	ROLLER MTG. BOLT 1/4"–20 X 3/4" HEX HEAD MS (GRADE 5)	STEEL
45	ROLLER MTG. NUT 1/4"–20 NYLON LOCKING NUT	NYLON
46	INSIDE FACE PANEL PART# 66122800 (18 ga 304 Stainless)	ST. ST'L
47	ARMOR PANEL PART# 66125400 (LUMGUARD 0.420" THK AG300)	COMPOSITE
48	SHIM 1/4" THK. MAX.	WOOD
49	INTERIOR INSIDE FACE PANEL PART# 66120900 (18 ga 304 Stainless)	ST. ST'L
50	MOUNTING STRAP (14 ga GALV STEEL)	STEEL

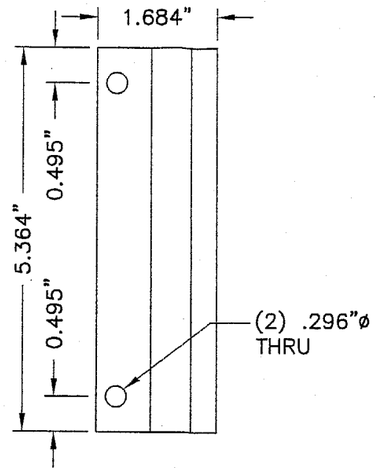

23 PULL HANDLE
PART# 65103300

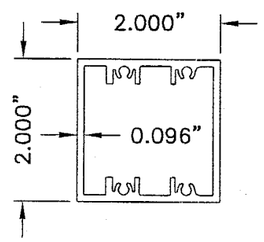

20 CROSS FRAME
PART# 64259026
ALUM. 6063–T6
ATTACH TO POSTS WITH
WITH (4) #8 x 1" M.S.
EACH END

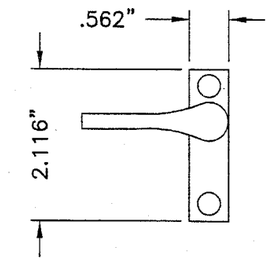

22 SELF–LATCHING
THUMB TURN
ADAMS–RITE
PART# 20090081

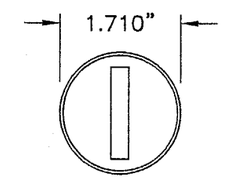

24 THUMB TURN
DEADBOLT
PART# 20090086

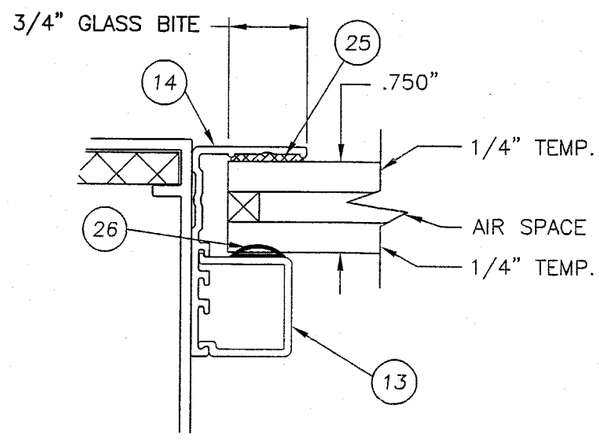

FRAME GLAZING DETAIL

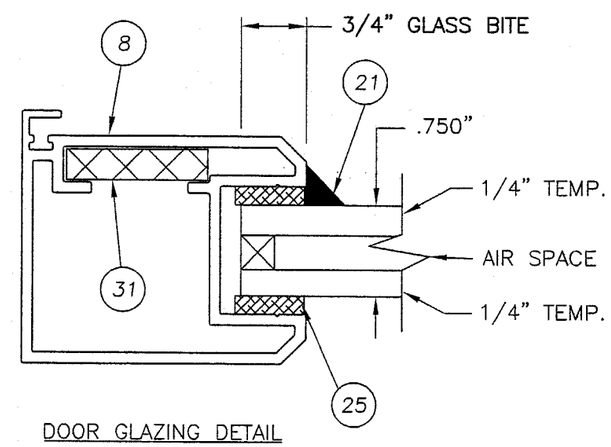

DOOR GLAZING DETAIL

Approved as complying with the Florida Building Code
Date FEB.16.2006
NOA# 05-0719.0
Miami Dade Product Control Division
By

Documents Prepared By:
RW BUILDING CONSULTANTS, INC.
P.O. Box 230 Valrico FL. 33595
Phone No.: 813.659.9197
Florida Board of Professional Engineers
Certificate Of Authorization No. 9813
Wendell W. Harney, P.E. No. 54158
1-26-06

PRODUCT: READY ACCESS DRIVE THROUGH WINDOW "NON–IMPACT"

PART OR ASSEMBLY: BILL OF MATERIALS, COMPONENTS & GLAZING DETAILS

REVISIONS

NO.	DATE		BY
3	01/24/06	REVISE PER DADE LETTER	EW
2	12/15/05	ADDED GLASS BITE DIMENSION	WH
1	08/24/05	REVISE PER DADE LETTER	EW

DATE: 06/16/05
SCALE: N.T.S.
DWG. BY: AEM
CHK. BY: WWH
DRAWING NO.: S–2553
SHEET 10 OF 10

\\Rwbcsrv\rwbc\proj 650 - 800\pf709\S-2553 REV3\S-2553-10-R1.dwg