MIAMI-DADE

BUILDING CODE COMPLIANCE OFFICE (BCCO)
PRODUCT CONTROL DIVISION

MIAMI-DADE COUNTY, FLORIDA
METRO-DADE FLAGLER BUILDING
140 WEST FLAGLER STREET, SUITE 1603
MIAMI, FLORIDA 33130-1563
(305) 375-2901 FAX (305) 375-2908

NOTICE OF ACCEPTANCE (NOA)

Decra Roofing Systems Inc.
1230 Railroad St.
Corona, CA 92882

SCOPE:

This NOA is being issued under the applicable rules and regulations governing the use of construction materials. The documentation submitted has been reviewed by Miami-Dade County Product Control Division and accepted by the Board of Rules and Appeals (BORA) to be used in Miami Dade County and other areas where allowed by the Authority Having Jurisdiction (AHJ).

This NOA shall not be valid after the expiration date stated below. The Miami-Dade County Product Control Division (In Miami Dade County) and/or the AHJ (in areas other than Miami Dade County) reserve the right to have this product or material tested for quality assurance purposes. If this product or material fails to perform in the accepted manner, the manufacturer will incur the expense of such testing and the AHJ may immediately revoke, modify, or suspend the use of such product or material within their jurisdiction. BORA reserves the right to revoke this acceptance, if it is determined by Miami-Dade County Product Control Division that this product or material fails to meet the requirements of the applicable building code.

This product is approved as described herein, and has been designed to comply with the High Velocity Hurricane Zone of the Florida Building Code.

DESCRIPTION: Decra Shingle

LABELING: Each unit shall bear a permanent label with the manufacturer's name or logo, city, state and following statement: "Miami-Dade County Product Control Approved", unless otherwise noted herein.

RENEWAL of this NOA shall be considered after a renewal application has been filed and there has been no change in the applicable building code negatively affecting the performance of this product.

TERMINATION of this NOA will occur after the expiration date or if there has been a revision or change in the materials, use, and/or manufacture of the product or process. Misuse of this NOA as an endorsement of any product, for sales, advertising or any other purposes shall automatically terminate this NOA. Failure to comply with any section of this NOA shall be cause for termination and removal of NOA.

ADVERTISEMENT: The NOA number preceded by the words Miami-Dade County, Florida, and followed by the expiration date may be displayed in advertising literature. If any portion of the NOA is displayed, then it shall be done in its entirety.

INSPECTION: A copy of this entire NOA shall be provided to the user by the manufacturer or its distributors and shall be available for inspection at the job site at the request of the Building Official.

This NOA revises NOA # 04-0831.02 and consists of pages 1 through 5.
The submitted documentation was reviewed by Jorge Acebo.

ROOFING SYSTEM APPROVAL:

Category:	Roofing
Sub-Category:	Metal, Panels (Non-Structural)
Material:	Steel
Deck Type:	Wood
Maximum Design Pressure	**-77.5 psf. (See General Limitations #1).**

TRADE NAMES OF PRODUCTS MANUFACTURED OR LABELED BY APPLICANT:

Product	Dimensions	Test Specifications	Product Description
Decra Shingle	Length 52" Width 21-$^1/_8$" Thickness min. 0.017	TAS 125	Stone Coated Metal Panel Shingle
Decra Shingle Stiffing Chanell/Clip	Length 49" Width 1-$^1/_4$" Thickness min. 0.019		24 ga. Coated metal channel.

EVIDENCE SUBMITTED:

Test Agency	Test Identifier	Test Name/Report	Date
Underwriters Laboratories Inc	02NK16253	UL 1897	05/29/02
Underwriters Laboratories Inc	02NK16239	UL 580	06/24/02
Underwriters Laboratories Inc	00NK5261	UL 790	05/02/00
PRI Asphalt Technologies	TRI-002-02-01	TAS 100	01/30/02
PRI Asphalt Technologies	PRI-03022	TAS 100	03/27/03
ECT Laboratories	ETC-02-840-12044.0	ASTM B 117 ASTM G 155	12/10/02

GENERAL LIMITATIONS

1. The maximum designed pressure listed herein shall be applicable to all roof pressure zones (i.e. field, perimeters, and corners). Neither rational analysis, nor extrapolation shall be permitted for enhanced fastening at enhanced pressure zones (i.e. perimeters, extended corners and corners).

2. All panels shall be permanently labeled with the manufacturer's name and/or logo, and the following statement: "Miami-Dade County Product Control Approved."

3. Any modifications to this Notice of Acceptance shall void such approval.

APPROVED ASSEMBLY:

SYSTEM:	Decra Shingle
Deck Type:	Wood, Non-insulated
Maximum Uplift Pressure:	The maximum allowable uplift pressure shall be **–77.5** psf. **(See General Limitations #1).**

Deck Attachment: In accordance with applicable Building Code, but in no case shall it be less than #8 x 2" wood screws spaced 6" o.c. In reroofing, where the deck is less than $^{19}/_{32}$" thick (Minimum $^{15}/_{32}$") the above attachment method must be in addition to existing attachment.

Fire Barrier: Any approved fire barrier having a current NOA. Or for a class A or B fire rating, install minimum ¼" thick Georgia Pacific "Dens Deck" (with current NOA) or minimum 4mm thick of Tritex, RockRoof (with current NOA) or $^{5}/_{8}$" water resistant type X gypsum sheathing with treated core and facer.

Underlayment: Minimum underlayment shall be an ASTM D 226 Type II installed with a minimum 4" side-lap and 6" end-laps. Underlayment shall be fastened with corrosion resistant tin-caps and 12 gauge 1 ¼" annular ring-shank nails, spaced 6" o.c. at all laps and two staggered rows 12" o.c. in the field of the roll. Or, any approved underlayment having a current NOA.

Valleys: Valley construction shall be in compliance with the minimum requirements provided in Roofing Application Standard RAS 133.

Metal Panels and Accessories: Install the " Decra Shingle " and accessories in compliance with Decra Roofing Systems Inc.' current, published installation instructions and details. Flashings, penetrations, valley construction and other details shall be constructed in compliance with the minimum requirements provided in Roofing Application Standard RAS 133.

Panels shall be fastened with corrosion resistant #12 pan head screw with slotted indented hex-washer of sufficient length (but not less than 1") to penetrate through the sheathing a minimum of $^{3}/_{16}$", at a spacing not to exceed 6" o.c. for a minimum of eight screws for each full panel length. (See detail drawings herein) Fastening shall be with the use of the Decra Shingle 24 ga. Stiffing channel. Shingle panels shall be staggered from right to left, and shall be positioned so that they cover the joints in the preceding course and adjacent courses shall be offset a minimum of 3 in. In any three adjacent courses no two joints should be directly aligned. Panel racking shall not be allowed.

DETAIL DRAWING:

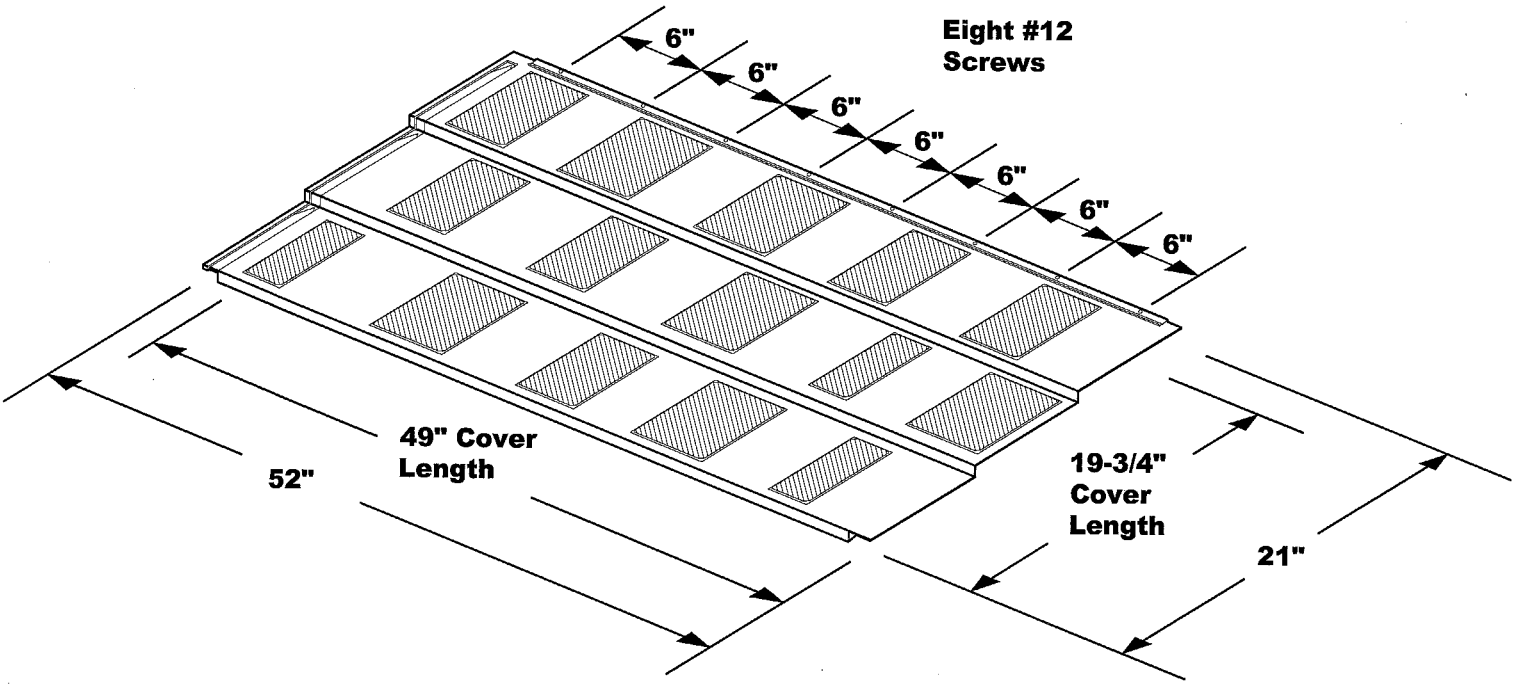

DECRA SHINGLE

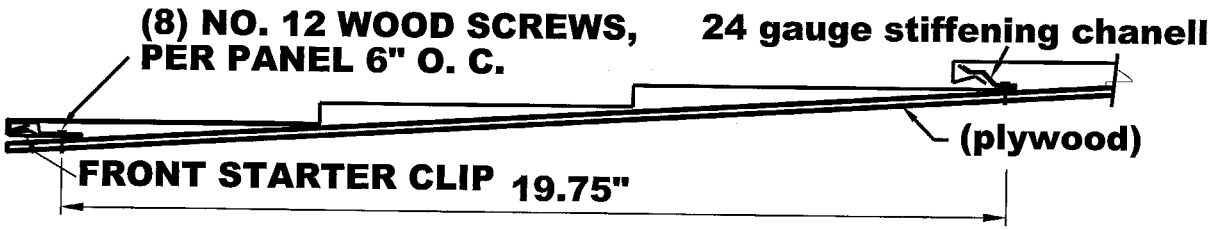

DECRA SHINGLE SIDE PROFILE

DETAIL DRAWING (Cont):

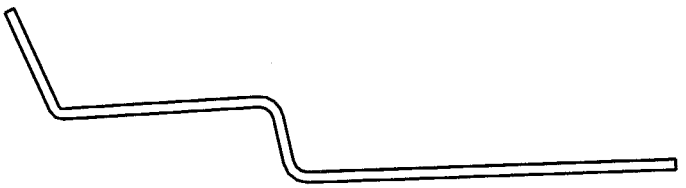

24 GA. STIFFINING CLIP

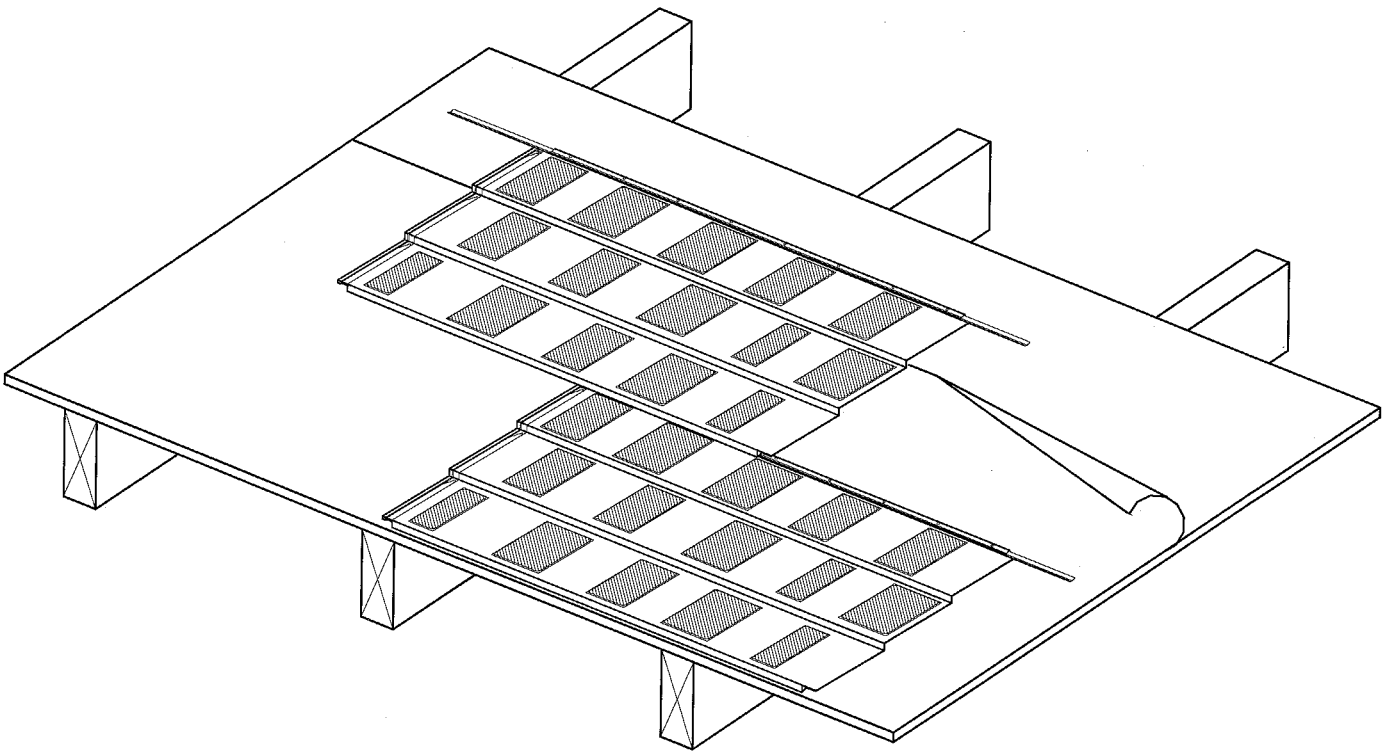

DECRA SHINGLE PANEL LAY UP

END OF THIS ACCEPTANCE