MIAMI-DADE COUNTY
BUILDING CODE COMPLIANCE OFFICE (BCCO)
PRODUCT CONTROL DIVISION

MIAMI-DADE COUNTY, FLORIDA
METRO-DADE FLAGLER BUILDING

140 WEST FLAGLER STREET, SUITE 1603
MIAMI, FLORIDA 33130-1563
(305) 375-2901 FAX (305) 375-2908
www.miamidade.gov

NOTICE OF ACCEPTANCE (NOA)

West Palm Installers, Inc.
6819 N.W. 84th Avenue
Doral, Florida 33166

SCOPE:
This NOA is being issued under the applicable rules and regulations governing the use of construction materials. The documentation submitted has been reviewed by Miami-Dade County Product Control Division and accepted by the Board of Rules and Appeals (BORA) to be used in Miami Dade County and other areas where allowed by the Authority Having Jurisdiction (AHJ).

This NOA shall not be valid after the expiration date stated below. The Miami-Dade County Product Control Division (In Miami Dade County) and/or the AHJ (in areas other than Miami Dade County) reserve the right to have this product or material tested for quality assurance purposes. If this product or material fails to perform in the accepted manner, the manufacturer will incur the expense of such testing and the AHJ may immediately revoke, modify, or suspend the use of such product or material within their jurisdiction. BORA reserves the right to revoke this acceptance, if it is determined by Miami-Dade County Product Control Division that this product or material fails to meet the requirements of the applicable building code.

This product is approved as described herein, and has been designed to comply with the High Velocity Hurricane Zone of the Florida Building Code.

DESCRIPTION: ASSA / Extruded Aluminum Bertha Bahama Shutter

APPROVAL DOCUMENT: Drawing No. 06-065, titled " ASSA / Extruded Bertha Bahama Shutter ", sheets 1 through 9 of 9, prepared by Tilteco, Inc., dated March 30, 2006, signed and sealed by Walter A. Tillit Jr., P.E., bearing the Miami-Dade County Product Control Approval stamp with the Notice of Acceptance number and approval date by the Miami-Dade County Product Control Division.

MISSILE IMPACT RATING: Large and Small Missile Impact

LABELING: Each unit shall bear a permanent label with the manufacturer's name or logo, city, state and the following statement: "Miami-Dade County Product Control Approved", unless otherwise noted herein.

RENEWAL of this NOA shall be considered after a renewal application has been filed and there has been no change in the applicable building code negatively affecting the performance of this product.

TERMINATION of this NOA will occur after the expiration date or if there has been a revision or change in the materials, use, and/or manufacture of the product or process. Misuse of this NOA as an endorsement of any product, for sales, advertising or any other purposes shall automatically terminate this NOA. Failure to comply with any section of this NOA shall be cause for termination and removal of NOA.

ADVERTISEMENT: The NOA number preceded by the words Miami-Dade County, Florida, and followed by the expiration date may be displayed in advertising literature. If any portion of the NOA is displayed, then it shall be done in its entirety.

INSPECTION: A copy of this entire NOA shall be provided to the user by the manufacturer or its distributors and shall be available for inspection at the job site at the request of the Building Official.

This NOA consists of this page 1, evidence submitted page E-1 as well as approval document mentioned above. The submitted documentation was reviewed by **Helmy A. Makar, P.E.**

PRODUCT CONTROL ACCEPTED

Helmy A. Makar
08/31/2006

NOA No 06-0501.06
Expiration Date: 08/31/2011
Approval Date: 08/31/2006
Page 1

West Palm Installers, Inc.

NOTICE OF ACCEPTANCE: EVIDENCE SUBMITTED

A. DRAWINGS

1. *Drawing No. 06-065, titled " ASSA / Extruded Bertha Bahama Shutter ", sheets 1 through 9 of 9, prepared by Tilteco, Inc., dated March 30, 2006, signed and sealed by Walter A. Tillit Jr., P.E.*

B. TESTS

1. *See Association's generic approval under 05-0237.*

C. CALCULATIONS

1. *See Association's generic approval under 05-0237.*

D. QUALITY ASSURANCE

1. *By Miami-Dade County Building Code Compliance Office.*

E. MATERIAL CERTIFICATIONS

1. *See Association's generic approval under 05-0237.*

F. STATEMENTS

1. *Release letter issued by the American Shutter Systems Association, dated March 30, 2006, certifying this product to meet the criteria of product tested and approved, and allowing West Palm Installers, Inc. to use the test results approved under Miami-Dade County Approval No. 05-0237, signed by Legny Santana.*
2. *Acknowledgment letter by West Palm Installers, Inc. dated April 13, 2006, signed by Mr. Luis Montalvo.*
3. *Letter by Tilteco, Inc., dated April 13, 2006, certifying that the drawing (No. 06-065) prepared for West Palm Installers, Inc., signed and sealed by Walter A. Tillit Jr., P.E., is engineering wise identical to American Shutter Systems Association, Inc. generic drawing (No. 05-094).*
4. *Acceptance Letter issued to Mr. Luis Montalvo on August 27, 2006, and returned signed by Mr. Luis Montalvo on August 31, 2006, indicating to please issue the proposed Notice of Acceptance as submitted and reviewed.*

Helmy A. Makar, P. E.
Product Control Examiner
NOA No 06-0501.06
Expiration Date: 08/31/2011
Approval Date: 08/31/2006

GENERAL NOTES:

1. EXTRUDED BERTHA BAHAMA SHUTTER SHOWN ON THIS PRODUCT APPROVAL DOCUMENT (P. A. D.) HAS BEEN VERIFIED FOR COMPLIANCE IN ACCORDANCE WITH THE 2004 EDITION OF THE FLORIDA BUILDING CODE.
THIS BAHAMA SHUTTER SYSTEM MAY BE INSTALLED AT HIGH VELOCITY HURRICANE ZONES.
DESIGN WIND LOADS SHALL BE DETERMINED AS PER SECTION 1620 OF THE ABOVE MENTIONED CODE.
IN ORDER TO VERIFY THAT ANCHORS ON THIS P.A.D., AS TESTED, WERE NOT OVERSTRESSED, A 33% INCREASE IN ALLOWABLE LOADS FOR WIND LOADS WAS NOT USED IN THEIR ANALYSIS. HOWEVER, FOR LAG SCREWS INTO WOOD, A 1.60 WIND LOAD DURATION FACTOR WAS USED TO CALCULATE SCREWS SPACINGS.
EXTRUDED BERTHA BAHAMA SHUTTER'S ADEQUACY FOR HAS BEEN VERIFIED IN ACCORDANCE WITH SECTION 1609.1.4 OF THE ABOVE MENTIONED CODE AS PER ATL REPORTS #0923.01-97 AND #0309.01-04 AS PER PROTOCOLS TAS-201, TAS-202 AND TAS-203.

2. ALL ALUMINUM EXTRUSIONS SHALL BE ALUMINUM ASSOCIATION 6063-T6 ALLOY AND TEMPER, WITH Fy = 25.0 ksi MINIMUM (UNLESS OTHERWISE NOTED).

3. ALL SCREWS TO BE STAINLESS STEEL 304 OR 316 SERIES W/ 50 ksi YIELD STRENGTH AND 90 ksi TENSILE STRENGTH OR CORROSION RESISTANT COATED CARBON STEEL AS PER DIN 50018.

4. BOLTS TO BE ALUMINUM ASSOCIATION 2024-T4 ALLOY AND TEMPER, ASTM A-307 GALVANIZED STEEL, OR AISI 304 SERIES STAINLESS STEEL WITH 36 ksi MINIMUM YIELD STRENGTH.

5. ALL ALUMINUM POP RIVETS TO BE 5052 ALUMINUM ALLOY WITH ALUMINUM MANDREL.

6. ANCHORS TO WALL SHALL BE AS FOLLOWS: (UNLESS OTHERWISE NOTED)
(A) TO EXISTING POURED CONCRETE: (Min. f'c=3145 p.s.i.)
- 1/4" ø TAPCON ANCHORS AS MANUFACTURED BY I.T.W. BUILDEX.
- 1/4" ø x 7/8" CALK-IN ANCHORS AS MANUFACTURED BY THE POWERS FASTENERS, INC.

NOTES:
A.1) MINIMUM EMBEDMENT OF TAPCON ANCHORS INTO POURED CONCRETE IS 1 1/2".

A.2) CALK-IN ANCHORS SHALL BE ENTIRELY EMBEDDED INTO THE POURED CONCRETE. NO EMBEDMENT INTO STUCCO SHALL BE PERMITTED.
1/4" ø-20 SCREWS USED SHALL BE 1 1/2" LONG MINIMUM SHOULD STUCCO EXIST AND 1" MINIMUM FOR WALLS WITH NO STUCCO.

A.3) IN CASE THAT PRECAST STONE, PRECAST CONCRETE PANELS, OR PAVERS BE FOUND ON THE EXISTING WALL OR FLOOR, ANCHORS SHALL BE LONG ENOUGH TO REACH THE MAIN STRUCTURE BEHIND SUCH PANELS. ANCHORAGE SHALL BE AS INDICATED ON NOTES A.1) & A.2) ABOVE.

(B) TO EXISTING CONCRETE BLOCK WALL:
- 1/4" ø TAPCON ANCHORS AS MANUFACTURED BY I.T.W. BUILDEX.
- 1/4" ø x 7/8" CALK-IN ANCHORS AS MANUFACTURED BY THE POWERS FASTENERS, INC.

NOTES:
B.1) MINIMUM EMBEDMENT OF TAPCON ANCHORS INTO THE CONCRETE BLOCK UNIT SHALL BE 1 1/4".

B.2) CALK-IN ANCHORS SHALL BE ENTIRELY EMBEDDED INTO THE CONCRETE BLOCK UNIT. NO EMBEDMENT INTO STUCCO SHALL BE PERMITTED. 1/4" ø-20 SCREWS USED SHALL BE 1 1/2" LONG MINIMUM SHOULD STUCCO EXIST AND 1" MINIMUM FOR WALLS WITH NO STUCCO.

B.3) IN CASE THAT PRECAST STONE OR PRECAST CONCRETE PANELS BE FOUND ON THE EXISTING WALL, ANCHORS SHALL BE LONG ENOUGH TO REACH THE MAIN STRUCTURE BEHIND SUCH PANELS. ANCHORAGE SHALL BE AS INDICATED ON NOTES B.1) & B.2) ABOVE.

(C) ANCHORS SHALL BE INSTALLED FOLLOWING ALL OF THE RECOMMENDATIONS AND SPECIFICATIONS OF THE ANCHOR'S MANUFACTURER.

7. EACH SHUTTER SHALL HAVE A LEGIBLE AND READILY VISIBLE MARKING INSTRUCTING OWNER OR TENANT TO SECURE SHUTTER WITH SIDE & SILL BRACKETS DURING PERIODS OF HURRICANE WARNINGS.

8. IT SHALL BE THE RESPONSIBILITY OF THE CONTRACTOR TO VERIFY THE SOUNDNESS OF THE STRUCTURE WHERE SHUTTER IS TO BE ATTACHED TO INSURE PROPER ANCHORAGE. CONTRACTOR TO SEAL/CAULK ALL SHUTTER COMPONENT EDGES WHICH REMAIN IN PERMANENT AND CONTINUOUS CONTACT WITH THE BUILDING TO PREVENT WIND/RAIN INTRUSION. CAULK AND SEAL SHUTTER TRACKS ALL AROUND FULL LENGTH. THIS SHUTTER SHALL ONLY BE ATTACHED TO CONCRETE, BLOCK OR WOOD FRAME BUILDINGS.

9. EXTRUDED BERTHA BAHAMA SHUTTER'S INSTALLATION SHALL COMPLY WITH SPECS INDICATED IN THIS DRAWING PLUS ANY BUILDING AND ZONING REGULATIONS PROVIDED BY THE JURISDICTION WHERE PERMIT IS APPLIED TO.

10. (a) THIS P.A.D. PREPARED BY THIS ENGINEER IS GENERIC AND DOES NOT PROVIDE INFORMATION FOR A SITE SPECIFIC PROJECT; i.e. WHERE THE SITE CONDITIONS DEVIATE FROM THE P.A.D.

(b) CONTRACTOR TO BE RESPONSIBLE FOR THE SELECTION, PURCHASE AND INSTALLATION INCLUDING LIFE SAFETY OF THIS PRODUCT, BASED ON THIS P.A.D., PROVIDED HE/SHE DOES NOT DEVIATE FROM THE CONDITIONS DETAILED ON THIS DOCUMENT. CONSTRUCTION SAFETY AT SITE IS THE CONTRACTOR'S RESPONSIBILITY.

(c) THIS P.A.D. WILL BE CONSIDERED INVALID IF ALTERED BY ANY MEANS.

(d) SITE SPECIFIC PROJECTS SHALL BE PREPARED BY A FLORIDA REGISTERED ENGINEER OR ARCHITECT WHICH WILL BECOME THE ENGINEER OF RECORD (E.O.R.) FOR THE PROJECT AND WHO WILL BE RESPONSIBLE FOR THE PROPER USE OF THE P.A.D. ENGINEER OF RECORD, ACTING AS A DELEGATED ENGINEER TO THE P.A.D. ENGINEER SHALL SUBMIT TO THIS LATTER THE SITE SPECIFIC DRAWINGS FOR REVIEW.

(e) THIS P.A.D. SHALL BEAR THE DATE AND ORIGINAL SEAL AND SIGNATURE OF THE PROFESSIONAL ENGINEER OF RECORD THAT PREPARED IT.

11. SHUTTER'S MANUFACTURER LABEL SHALL BE PLACED ON THE EXPOSED SURFACE OF THE BAHAMA FRAME Ⓔ OR Ⓖ.
ONE LABEL SHALL BE PLACED FOR EVERY OPENING. LABEL SHALL READ AS FOLLOWS:
WEST PALM INSTALLERS, INC.
DORAL, FL.
MIAMI--DADE COUNTY PRODUCT CONTROL APPROVED.

F.B.C.(**H**igh **V**elocity **H**urricane **Z**one)

Approved as complying with the Florida Building Code
Date 08/31/2006
NOA# 06-0501.06
Miami Dade Product Control Division
By Helmy A. Mahfouz

3/30/06

TILTECO INC.
TILLIT TESTING & ENGINEERING COMPANY
6355 N.W. 36th. St., Ste. 305, VIRGINIA GARDENS, FLORIDA 33166
Phone : (305)871-1530 . Fax : (305)871-1531
EB-0006719
WALTER A. TILLIT Jr., P. E.
FLORIDA Lic. # 44167

© 2004 TILTECO INC.

ASSA / EXTRUDED BERTHA BAHAMA SHUTTER

WEST PALM INSTALLERS, INC.
(ASSA # 332)
6819 NW 84TH AVENUE
DORAL, FL. 33166
PH.:(305)406-3575, FAX:(305)406-3576

REV. No	DESCRIPTION	DATE	REV. No	DESCRIPTION	DATE
1	-	-	3	-	-
2	-	-	4	-	-

DRAWN BY: S.M.
03/30/06 DATE
06-065 DRAWING No
SHEET 1 OF 9

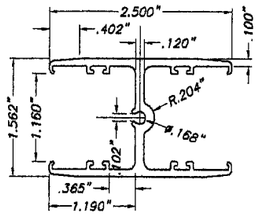

(A1) REGULAR INTERIOR MULLION
6005-T5 Alum. ALLOY
SCALE: 1/2" = 1"

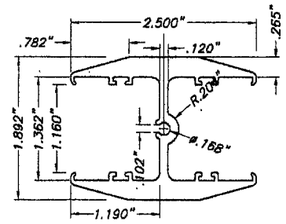

(A2) HEAVY INTERIOR MULLION
6005-T5 Alum. ALLOY
SCALE: 1/2" = 1"

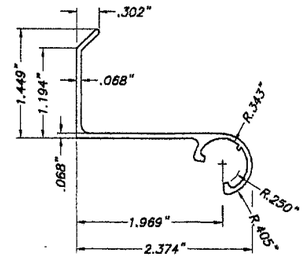

(B) FEMALE HINGE
SCALE: 1/2" = 1"

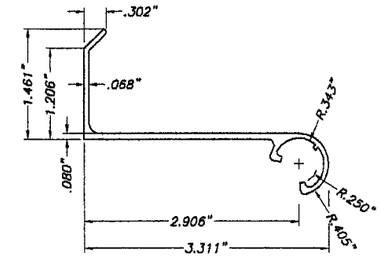

(C) 1" B. O. FEMALE HINGE
SCALE: 1/2" = 1"

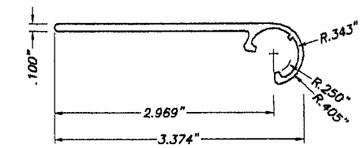

(D) FLAT FEMALE HINGE
SCALE: 1/2" = 1"

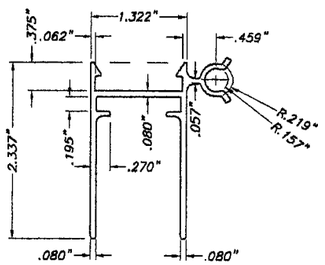

(E) BAHAMA MALE TOP FRAME
SCALE: 1/2" = 1"

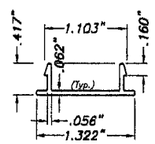

(F) SNAP CAP
SCALE: 1/2" = 1"

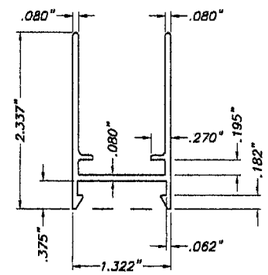

(G) BAHAMA FRAME
SCALE: 1/2" = 1"

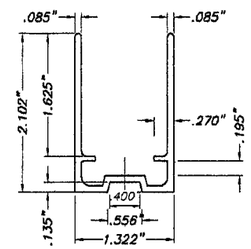

(G1) ALTERNATE BAHAMA FRAME
SCALE: 1/2" = 1"

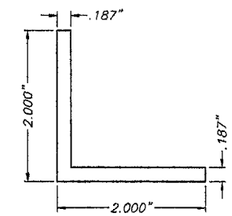

(H) CORNER KEY
1" LONG
SCALE: 1/2" = 1"

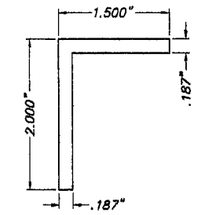

(N) WALL MOUNT Alum. BRACKET
7" LONG
SCALE: 1/2" = 1"

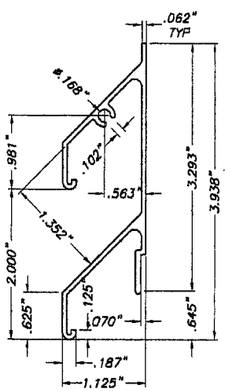

(I) HALF SHUTTER BLADE
SCALE: 1/2" = 1"

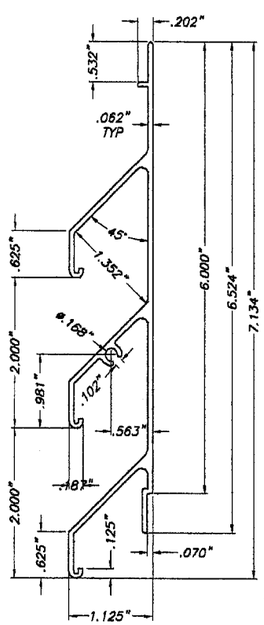

(J) SHUTTER BLADE
SCALE: 1/2" = 1"

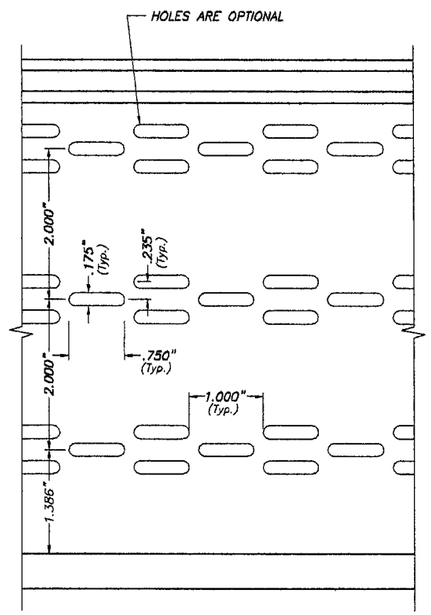

SHUTTER BLADE ELEVATION
SCALE: 1/2" = 1"

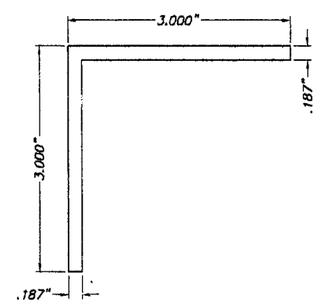

(O) BUILD-OUT Alum. BRACKET
7" LONG
SCALE: 1/2" = 1"

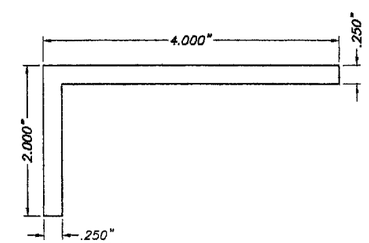

(P) BUILD-OUT SIDE BRACKET
7" LONG
SCALE: 1/2" = 1"

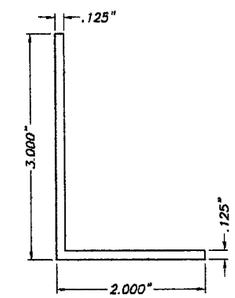

(Q) SILL ANGLE
SCALE: 1/2" = 1"

COMPONENTS

Approved as complying with the Florida Building Code
Date 08/31/2006
NOA# 06-0501.06
Miami Dade Product Control Division
By Helmy A. Mahler

F.B.C.(**H**igh **V**elocity **H**urricane **Z**one)

3/30/06

TILTECO INC.
TILLIT TESTING & ENGINEERING COMPANY
6355 N.W. 36th. St., Ste. 305, VIRGINIA GARDENS, FLORIDA 33166
Phone : (305)871-1530 . Fax : (305)871-1531
EB-0006719
WALTER A. TILLIT Jr., P. E.
FLORIDA Lic. # 44167

© 2004 TILTECO INC.

ASSA / EXTRUDED BERTHA BAHAMA SHUTTER

WEST PALM INSTALLERS, INC.
(ASSA # 332)
6819 NW 84TH AVENUE
DORAL, FL. 33166
PH.:(305)406-3575, FAX:(305)406-3576

REV. No	DESCRIPTION	DATE	REV. No	DESCRIPTION	DATE
1	–	–	3	–	–
2	–	–	4	–	–

DRAWN BY: S.M.
03/30/06 DATE
06-065 DRAWING No
SHEET 2 OF 9

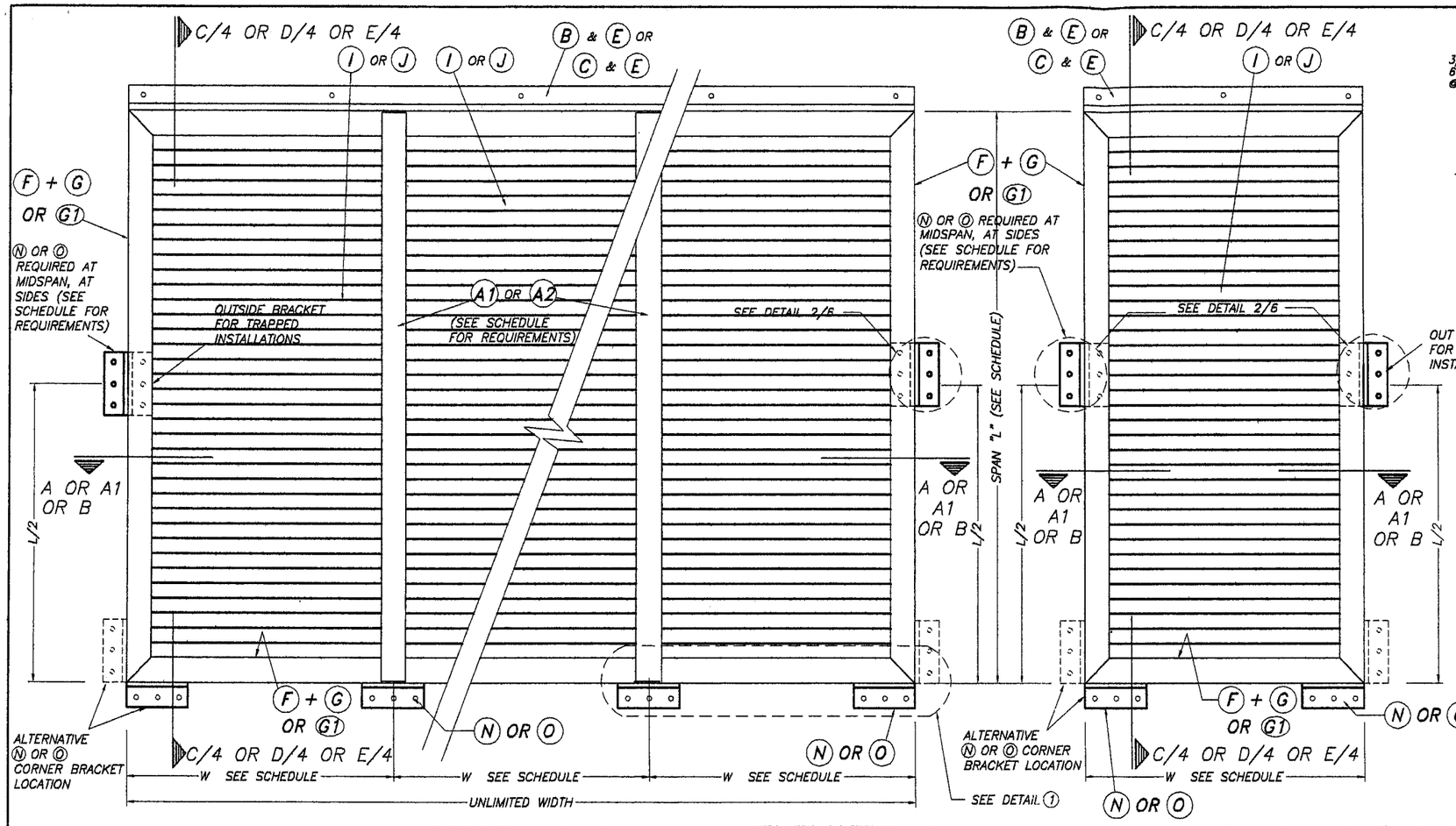

MULTIPLE UNIT

ELEVATIONS

N. T. S.

SINGLE UNIT

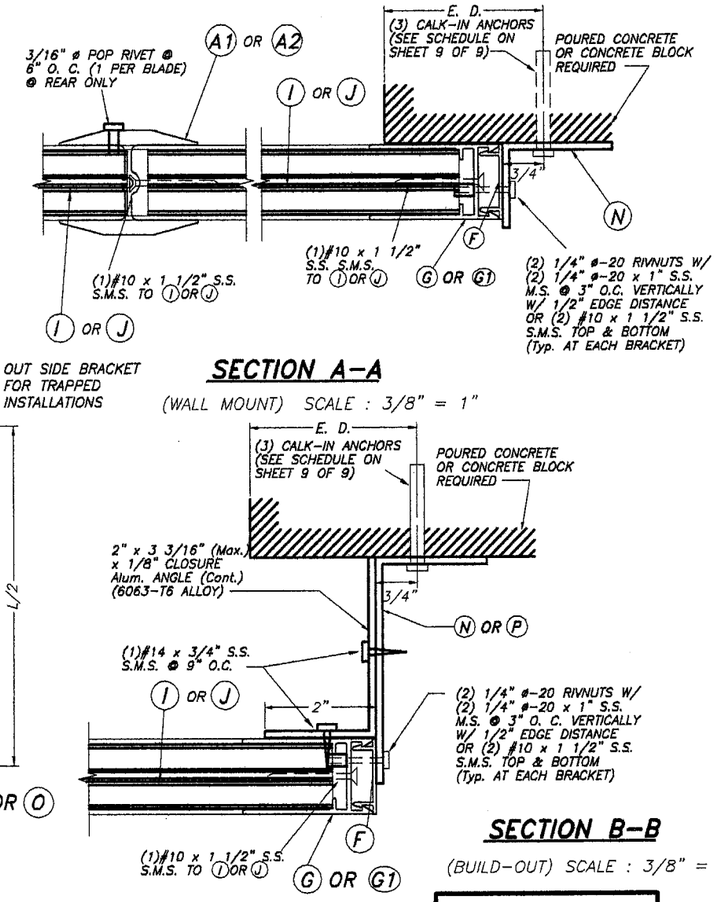

SECTION A-A

(WALL MOUNT) SCALE : 3/8" = 1"

SECTION B-B

(BUILD-OUT) SCALE : 3/8" = 1"

NOTE:
E. D. = 3 1/2" Min.

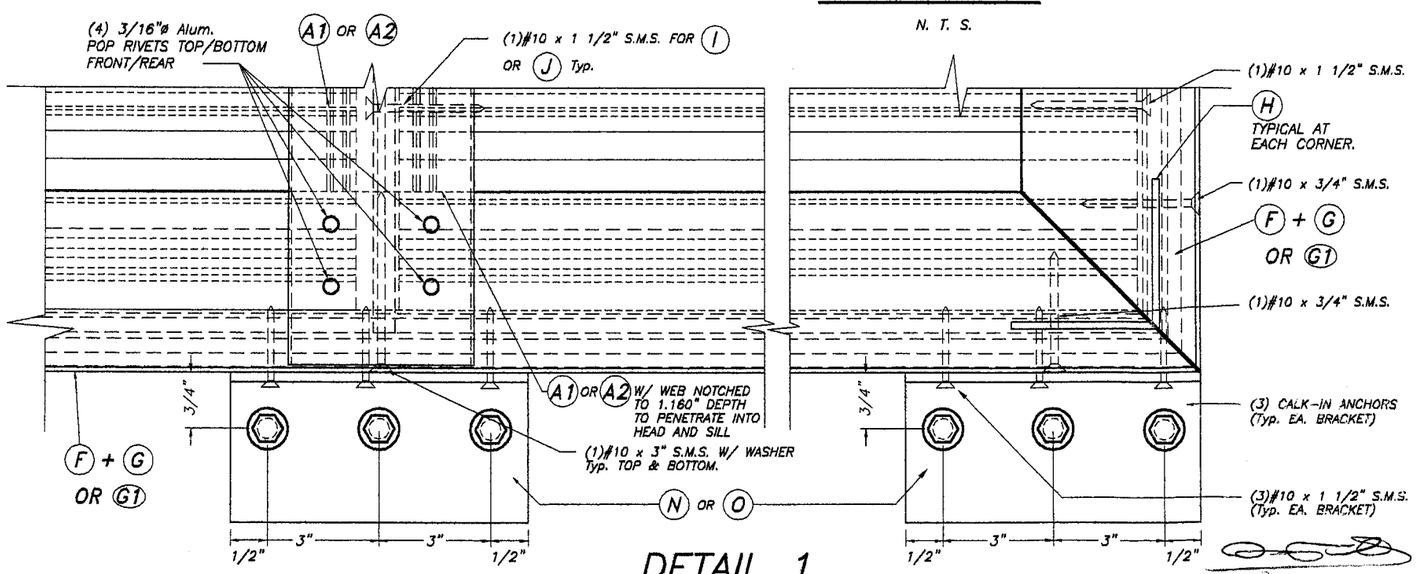

DETAIL 1

SCALE : 1/2" = 1"

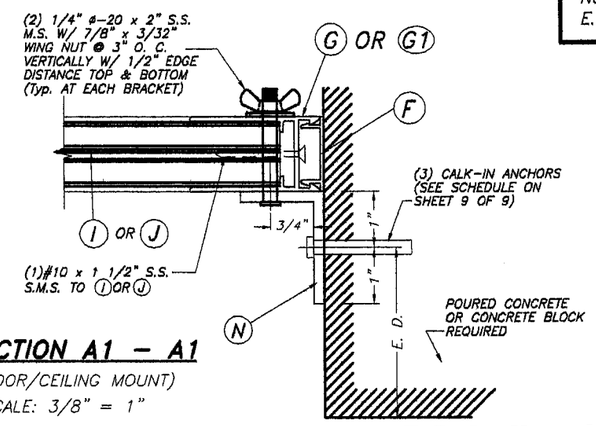

SECTION A1 - A1

(FLOOR/CEILING MOUNT)
SCALE: 3/8" = 1"

Approved as complying with the Florida Building Code
Date 08/31/2006
NOA# 06-0501.06
Miami Dade Product Control Division
By Helmy A. Abdelsalam

F.B.C.(**H**igh **V**elocity **H**urricane **Z**one)

3/30/06

TILTECO INC.
TILLIT TESTING & ENGINEERING COMPANY
6355 N.W. 36th. St., Ste. 305, VIRGINIA GARDENS, FLORIDA 33166
Phone : (305)871-1530 , Fax : (305)871-1531
EB-0006719
WALTER A. TILLIT Jr., P. E.
FLORIDA Lic. # 44167
© 2004 TILTECO INC.

ASSA / EXTRUDED BERTHA BAHAMA SHUTTER

WEST PALM INSTALLERS, INC.
(ASSA # 3332)
6819 NW 84TH AVENUE
DORAL, FL. 33166
PH.:(305)406-3575, FAX:(305)406-3576

REV. No	DESCRIPTION	DATE	REV. No	DESCRIPTION	DATE
1	-	-	3	-	-
2	-	-	4	-	-

DRAWN BY: S.M.
03/30/06 DATE
06-065 DRAWING No
SHEET 3 OF 9

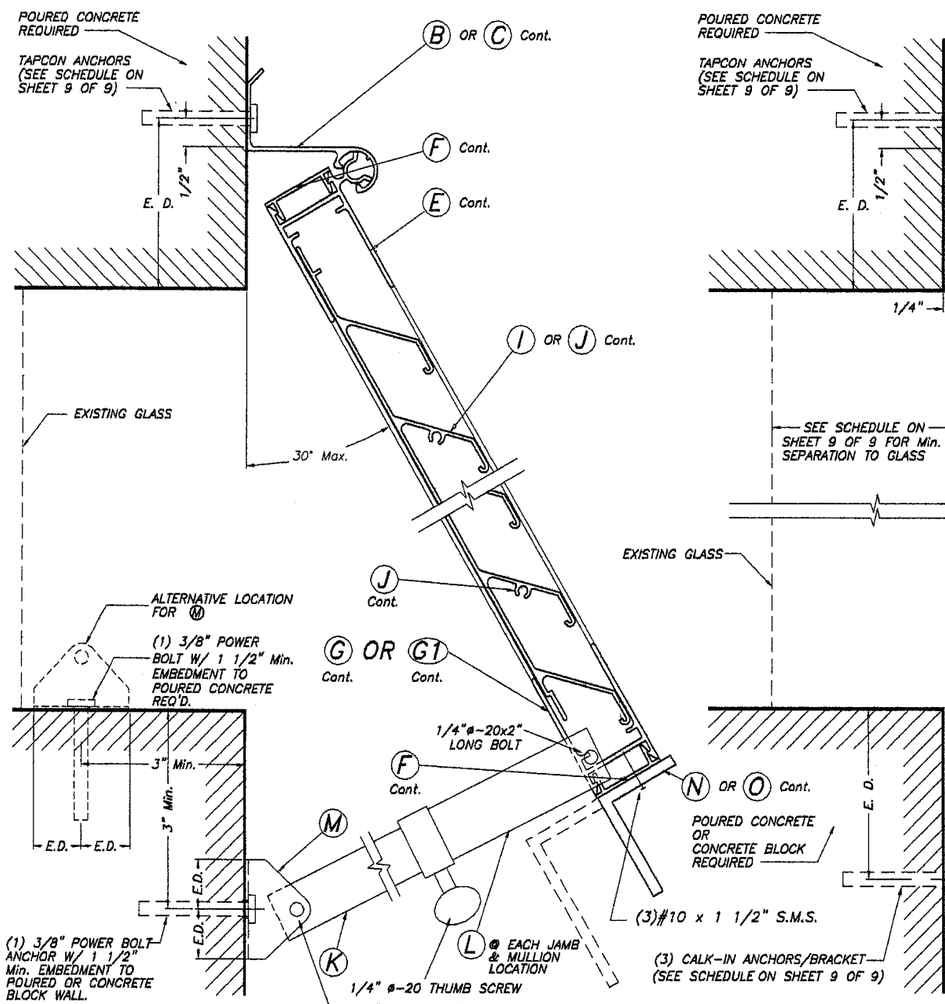

SECTION C – C (WALL MOUNT)

NON HURRICANE POSITION (74 m.p.h. WIND SPEED)

SCALE: 3/8" = 1"

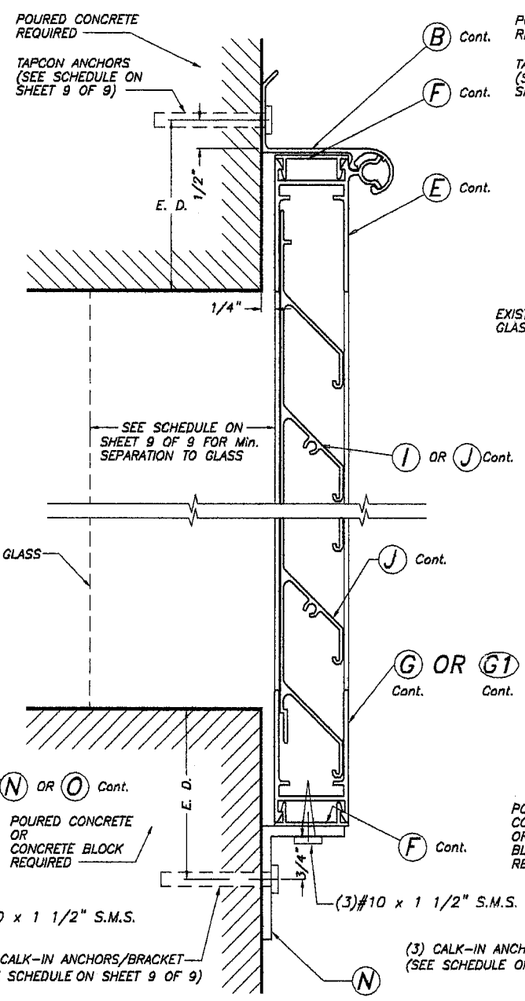

SECTION C – C (WALL MOUNT)

HURRICANE POSITION

SCALE: 3/8" = 1"

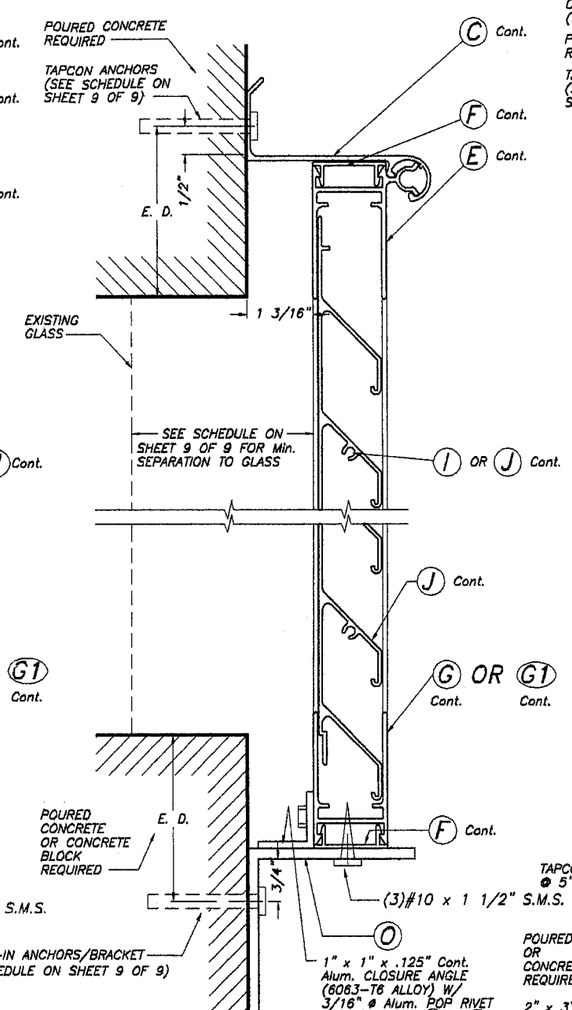

SECTION D – D (BUILD-OUT)

HURRICANE POSITION

SCALE: 3/8" = 1"

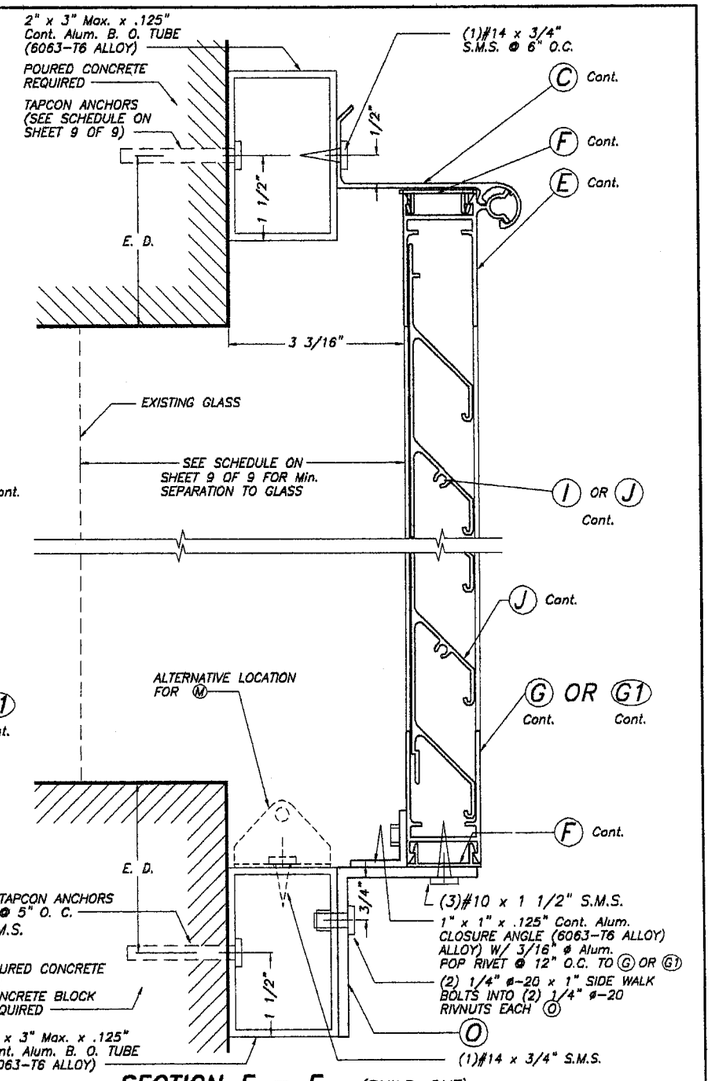

SECTION E – E (BUILD-OUT)

HURRICANE POSITION

SCALE: 3/8" = 1"

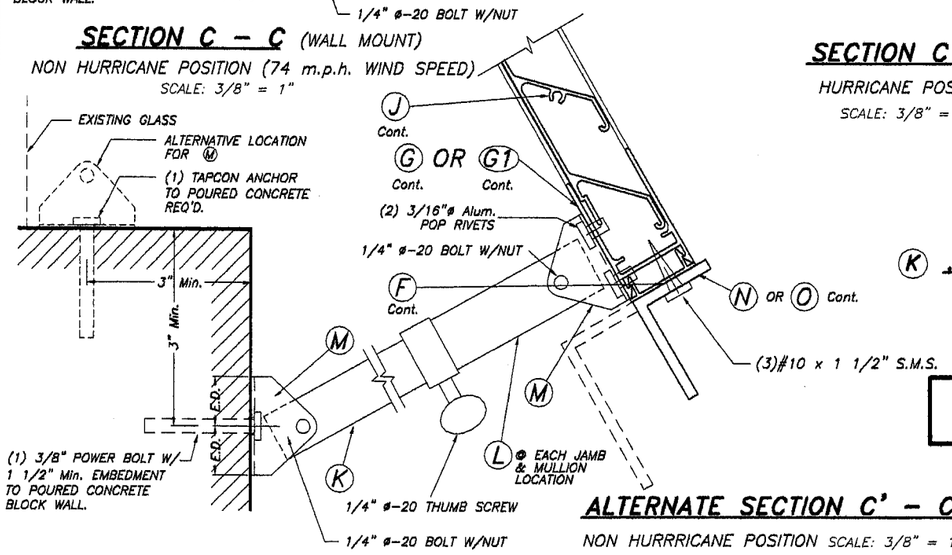

ALTERNATE SECTION C' – C' (WALL MOUNT)

NON HURRRICANE POSITION SCALE: 3/8" = 1"

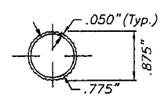

K .875" SERRATED TUBE

INSIDE ARM
6063-T6 ALLOY
SCALE : 3/8" = 1"

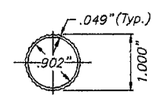

L 1" SERRATED TUBE

OUTSIDE ARM
6063-T6 ALLOY
SCALE : 3/8" = 1"

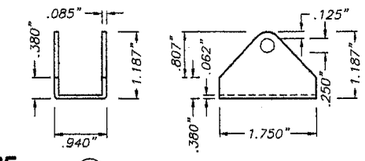

M CAMEL BACK HINGE

3003-H14 Alum. ALLOY

SCALE : 3/8" = 1"

NOTE:
E. D. = 3 1/2" Min.

Approved as complying with the Florida Building Code
Date 08/31/2006
NOA# 06-0501.06
Miami Dade Product Control Division
By Helmy A. Mohr

F.B.C.(**H**igh **V**elocity **H**urricane **Z**one)

3/30/06

TILTECO INC.
TILLIT TESTING & ENGINEERING COMPANY
6355 N.W. 36th. St., Ste. 305, VIRGINIA GARDENS, FLORIDA 33166
Phone : (305)871-1530 . Fax : (305)871-1531
EB-0006719
WALTER A. TILLIT Jr., P. E.
FLORIDA Lic. # 44167

© 2004 TILTECO INC.

ASSA / EXTRUDED BERTHA BAHAMA SHUTTER

WEST PALM INSTALLERS, INC.
(ASSA # 332)
6819 NW 84TH AVENUE
DORAL, FL. 33168
PH.:(305)406-3575, FAX:(305)406-3576

REV. No	DESCRIPTION	DATE	REV. No	DESCRIPTION	DATE
1	–	–	3	–	–
2	–	–	4	–	–

DRAWN BY: S.M.

03/30/06 DATE

06-065 DRAWING No

SHEET 4 OF 9

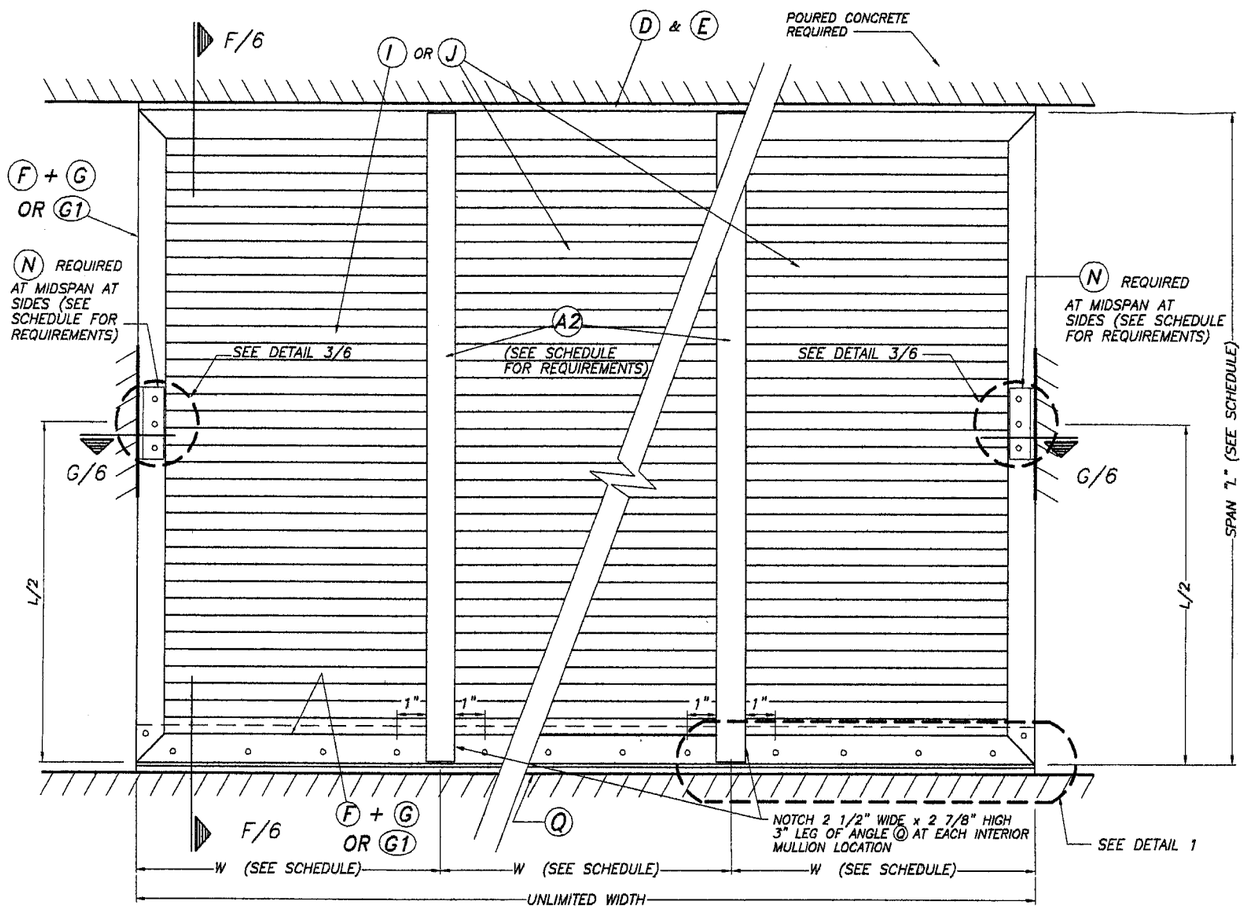

MULTIPLE UNIT

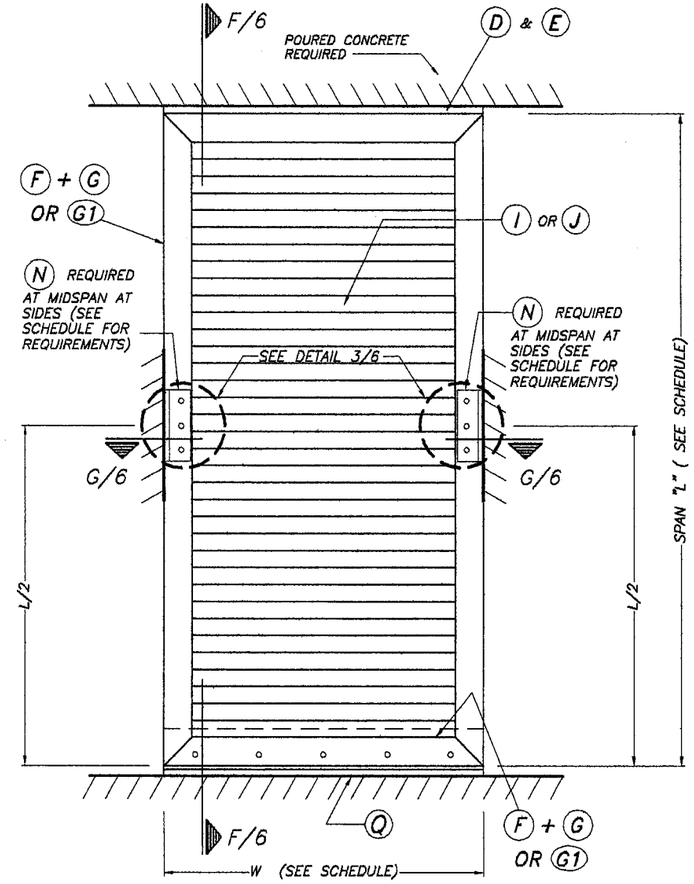

SINGLE UNIT

ELEVATIONS

N. T. S.

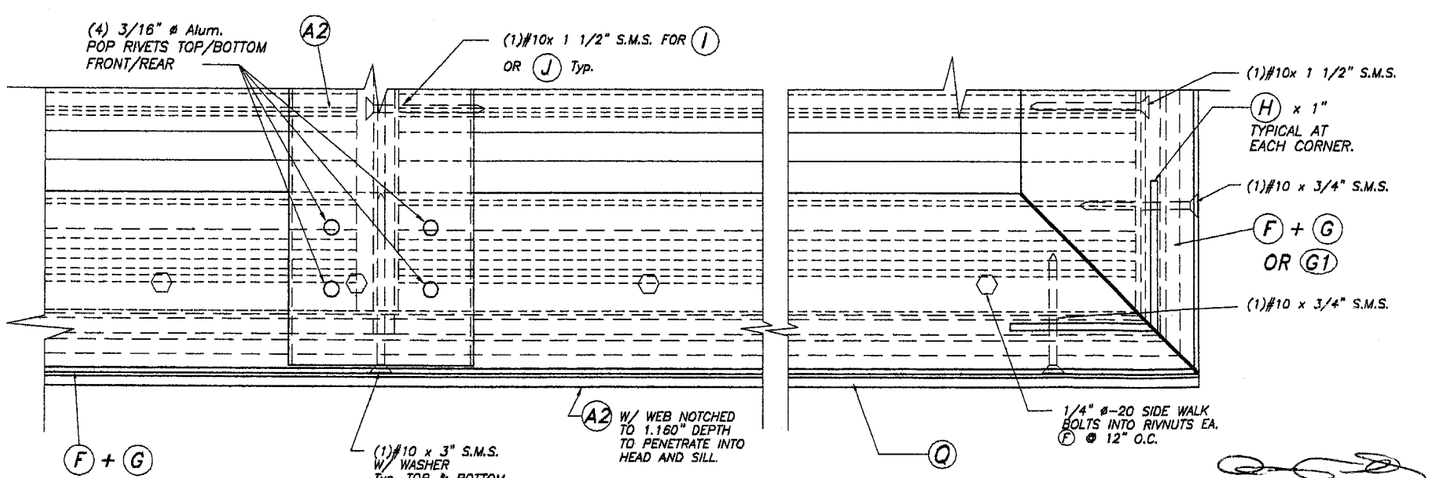

DETAIL 1

SCALE : 1/2" = 1"

3/30/06

Approved as complying with the Florida Building Code
Date 08/31/2006
NOA# 06-0501.06
Miami Dade Product Control Division
By

F.B.C.(**H**igh **V**elocity **H**urricane **Z**one)

TILTECO INC.
TILLIT TESTING & ENGINEERING COMPANY
6355 N.W. 36th. St., Ste. 305, VIRGINIA GARDENS, FLORIDA 33166
Phone : (305)871-1530 . Fax : (305)871-1531
EB-0006719
WALTER A. TILLIT Jr., P. E.
FLORIDA Lic. # 44167
© 2004 TILTECO INC.

ASSA / EXTRUDED BERTHA BAHAMA SHUTTER

WEST PALM INSTALLERS, INC.
(ASSA # 3332)
6819 NW 84TH AVENUE
DORAL, FL. 33166
PH.:(305)406-3575, FAX:(305)406-3576

REV. No	DESCRIPTION	DATE	REV. No	DESCRIPTION	DATE
1	–	–	3	–	–
2	–	–	4	–	–

DRAWN BY: S.M.
03/30/06 DATE
06-065 DRAWING No
SHEET 5 OF 9

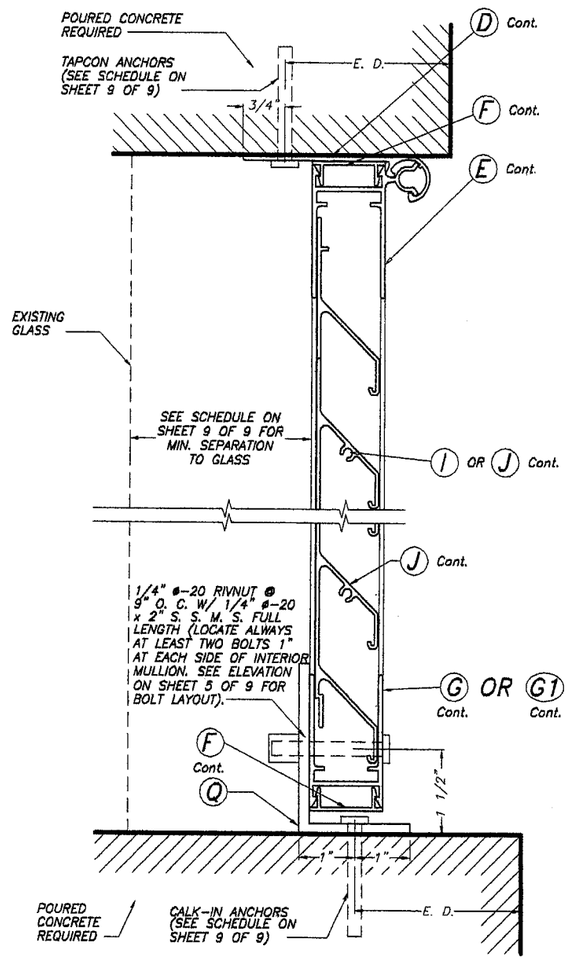

SECTION F – F

(TRAPPED MOUNT)

HURRICANE POSITION

SCALE: 3/8" = 1"

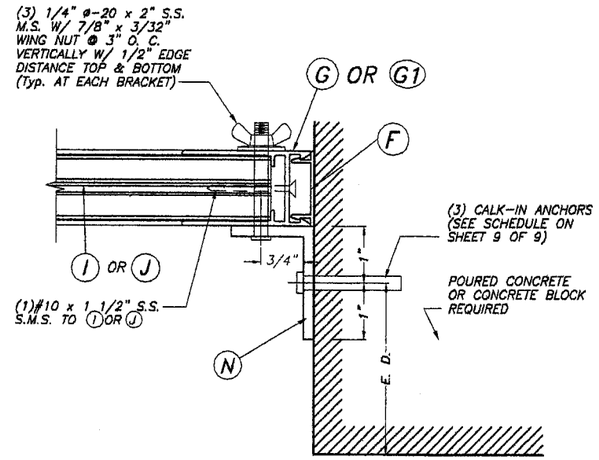

SECTION G – G

(TRAPPED MOUNT)

HURRICANE POSITION

SCALE: 3/8" = 1"

NOTE:
E. D. = 3 1/2" Min.

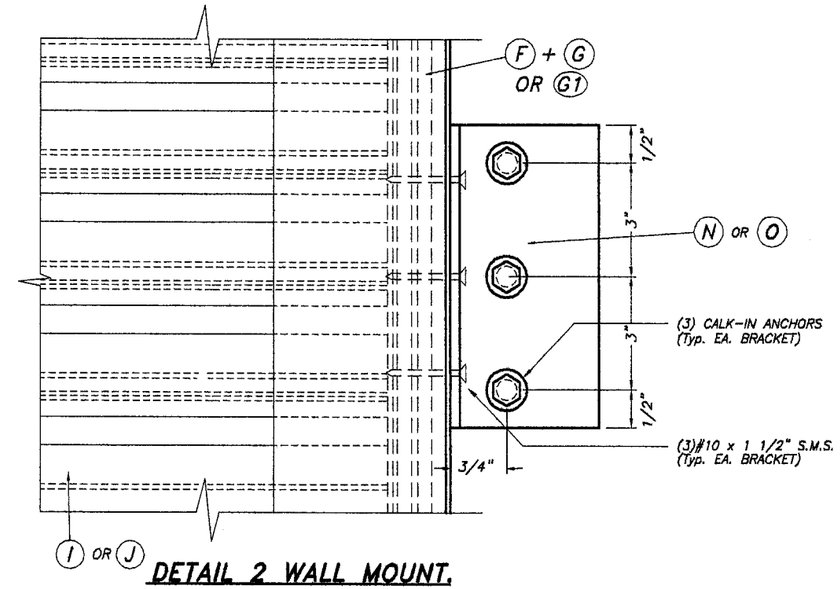

DETAIL 2 WALL MOUNT.

SCALE : 1/2" = 1"

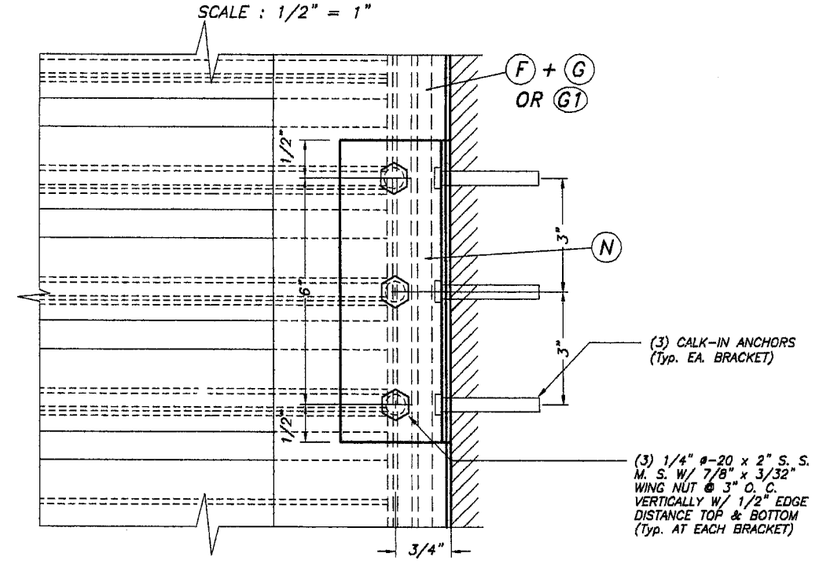

DETAIL 3 TRAPPED

SCALE : 1/2" = 1"

Approved as complying with the Florida Building Code
Date 08/31/2006
NOA# 06-0501.06
Miami Dade Product Control Division
By Helena A. Melo

F.B.C.(**H**igh **V**elocity **H**urricane **Z**one)

3/30/06

TILTECO INC.
TILLIT TESTING & ENGINEERING COMPANY
6355 N.W. 36th. St., Ste. 305, VIRGINIA GARDENS, FLORIDA 33166
Phone : (305)871-1530 . Fax : (305)871-1531
EB-0006719
WALTER A. TILLIT Jr., P. E.
FLORIDA Lic. # 44167

© 2004 TILTECO INC.

ASSA / EXTRUDED BERTHA BAHAMA SHUTTER

WEST PALM INSTALLERS, INC.
(ASSA # 332)
6819 NW 84TH AVENUE
DORAL, FL. 33166
PH.:(305)406-3575, FAX:(305)406-3576

REV. No	DESCRIPTION	DATE	REV. No	DESCRIPTION	DATE
1	–	–	3	–	–
2	–	–	4	–	–

DRAWN BY: S.M.
03/30/06 DATE
06-065 DRAWING No
SHEET 6 OF 9

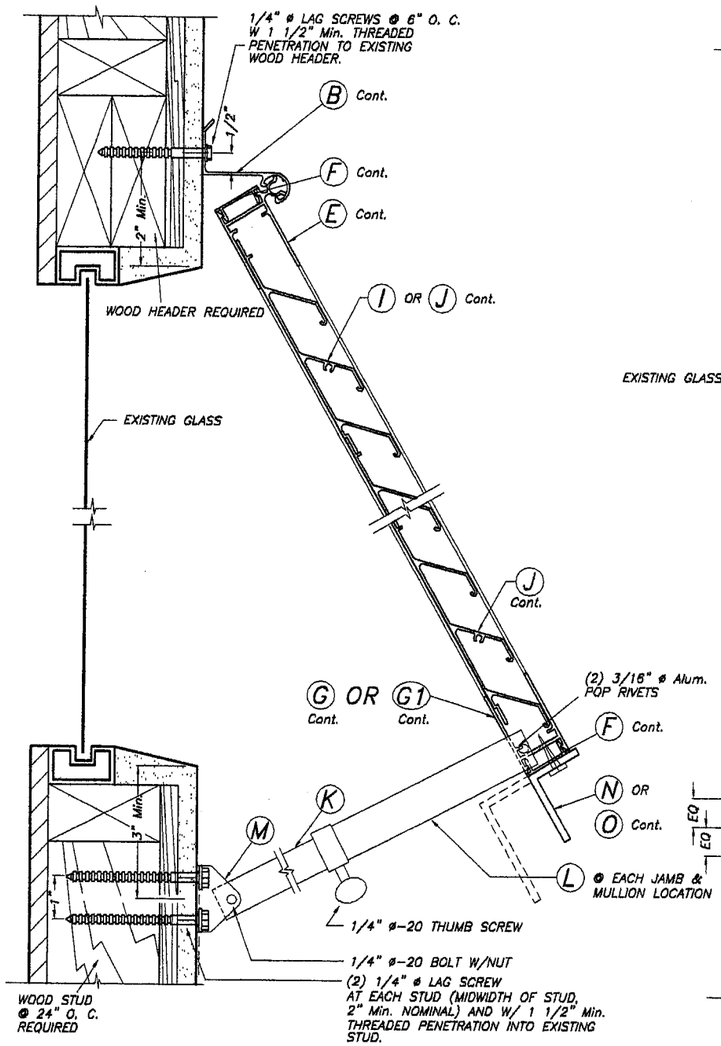

NON HURRICANE POSITION DETAIL: (74 m.p.h. OR LESS WIND SPEED)
SCALE: 3/8" = 1"

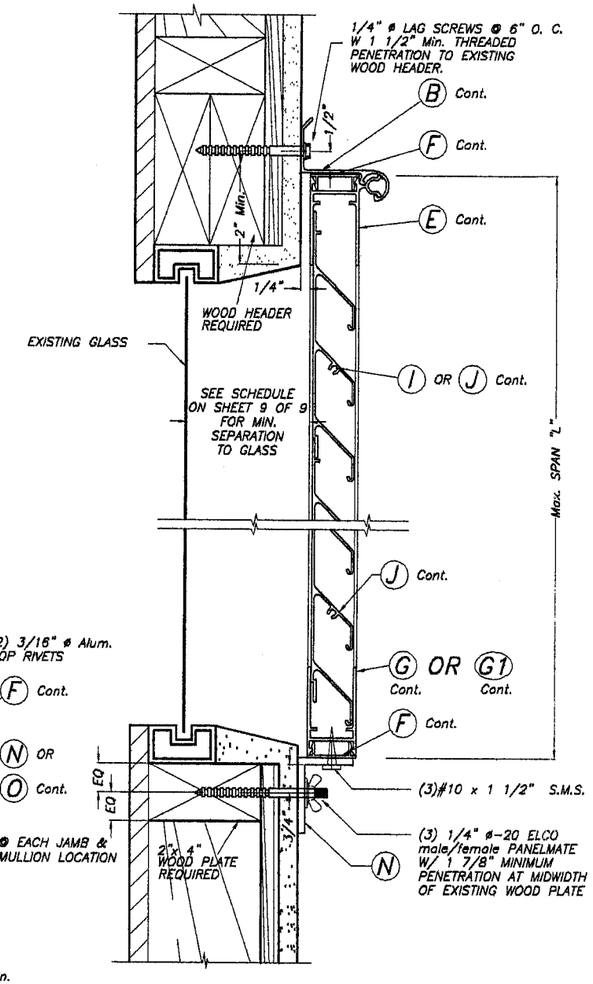

ALTERNATIVE 1
HURRICANE POSITION
SCALE: 3/8" = 1"

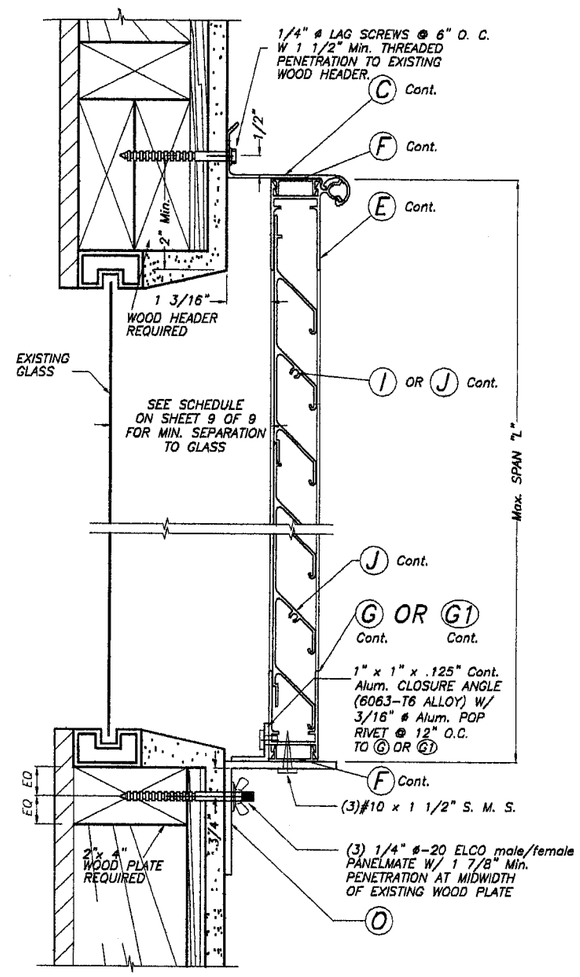

ALTERNATIVE 2
HURRICANE POSITION
SCALE: 3/8" = 1"

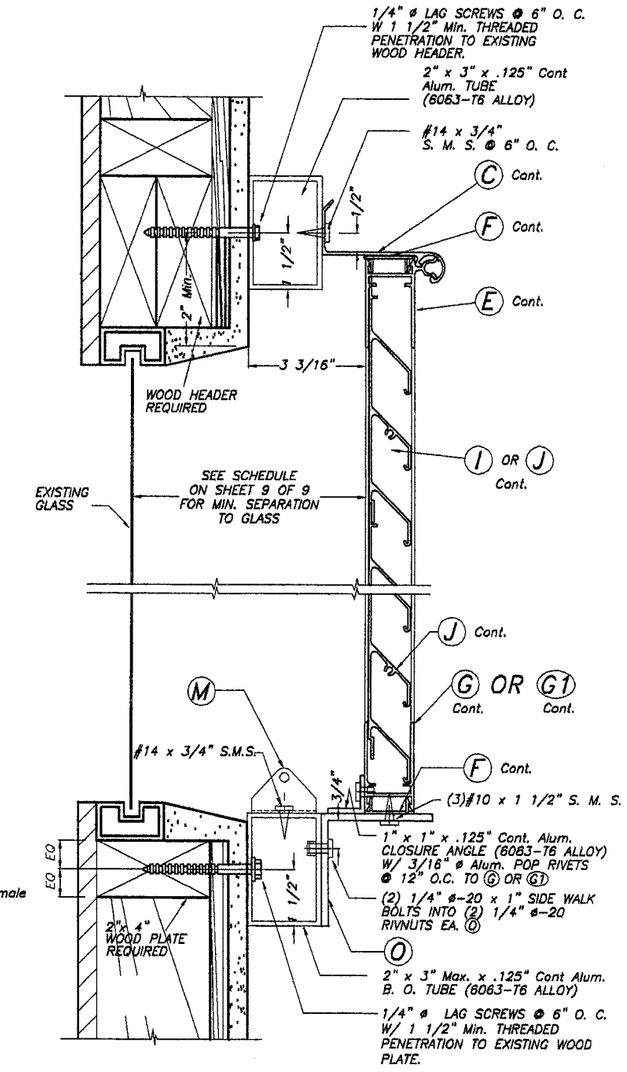

ALTERNATIVE 3
HURRICANE POSITION
SCALE: 3/8" = 1"

Approved as complying with the Florida Building Code
Date 08/31/2006
NOA# 06-0501.06
Miami Dade Product Control Division
By Helmy A. Mahler

WALL MOUNTING INSTALLATION & BUILD-OUT
- SECTION A

INSTALLATION DETAILS ON EXISTING WOOD BUILDINGS

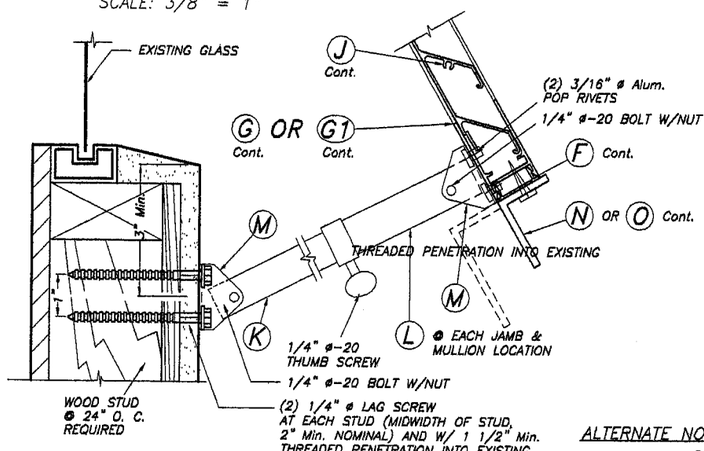

ALTERNATE NON HURRICANE POSITION DETAIL
SCALE: 3/8" = 1"

NOTES :

1. INSTALLATIONS ARE ONLY VALID FOR INSTALLATIONS WITH DESIGN WIND LOAD'S LESS OR EQUAL THAN +62.0, -75.0 p.s.f. AND Max. SHUTTER SPAN AS PER SCHEDULES ON SHEET 9 OF 9.
2. NEW 2" x 6" P. T. TO BE SOUTHERN PINE No. 2, SURFACED DRY WITH 19 % M. M. C. W/ SPECIFIC DENSITY OF 0.55.
3. FOR NEW WOOD FRAME CONSTRUCTION: WOOD MEMBERS TO BE SOUTHERN PINE No. 2, W/ SPECIFIC DENSITY OF 0.55 OR EQUAL.

3/30/06

F.B.C.(**H**igh **V**elocity **H**urricane **Z**one)

TILTECO INC.
TILLIT TESTING & ENGINEERING COMPANY
6355 N.W. 36th. St., Ste. 305, VIRGINIA GARDENS, FLORIDA 33166
Phone : (305)871-1530 . Fax : (305)871-1531
EB-0006719
WALTER A. TILLIT Jr., P. E.
FLORIDA Lic. # 44167

© 2004 TILTECO INC.

ASSA / EXTRUDED BERTHA BAHAMA SHUTTER

WEST PALM INSTALLERS, INC.
(ASSA # 332)
6819 NW 84TH AVENUE
DORAL, FL. 33166
PH.:(305)406-3575, FAX:(305)406-3576

REV. No	DESCRIPTION	DATE	REV. No	DESCRIPTION	DATE
1	-	-	3	-	-
2	-	-	4	-	-

DRAWN BY: S.M.
03/30/06 DATE
06-065 DRAWING No
SHEET 7 OF 9

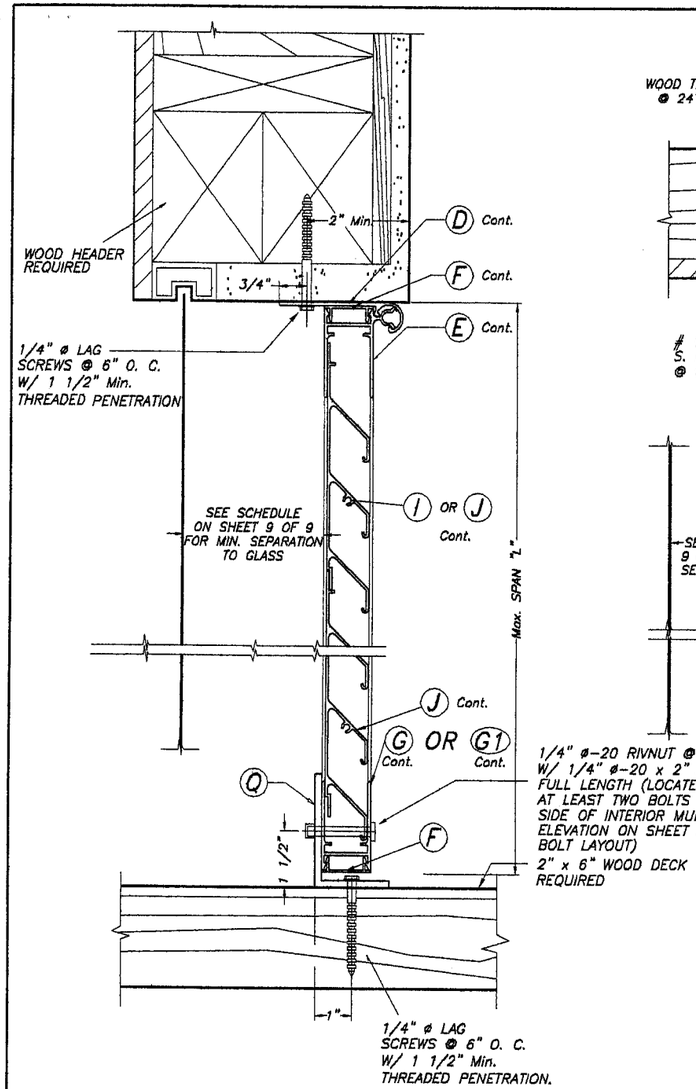

ALTERNATIVE 4A

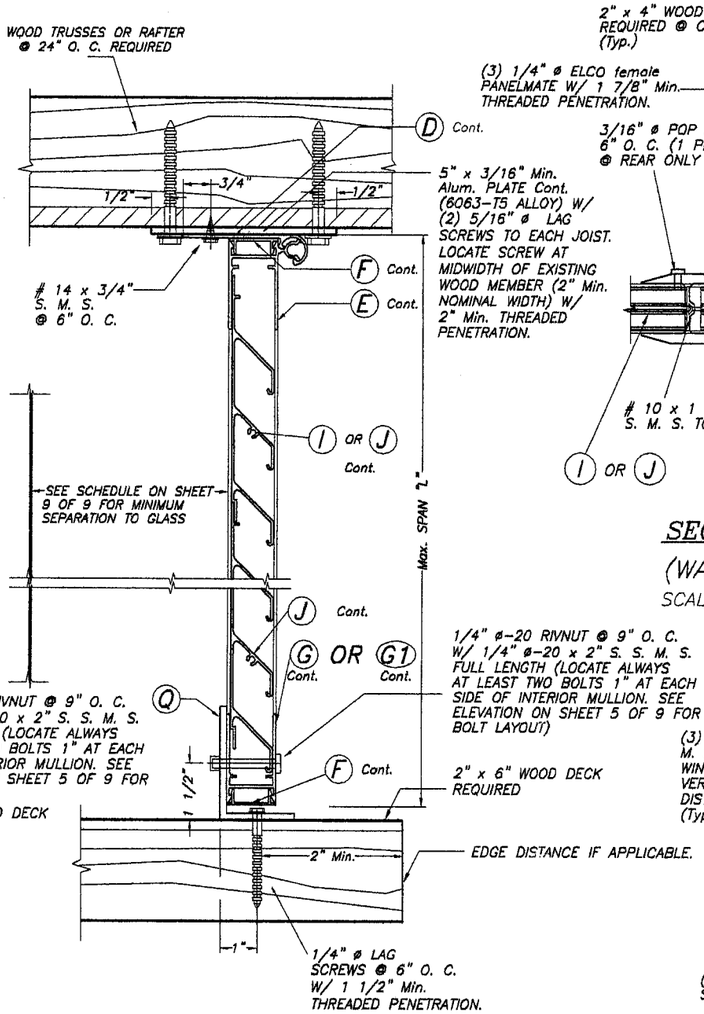

ALTERNATIVE 4B

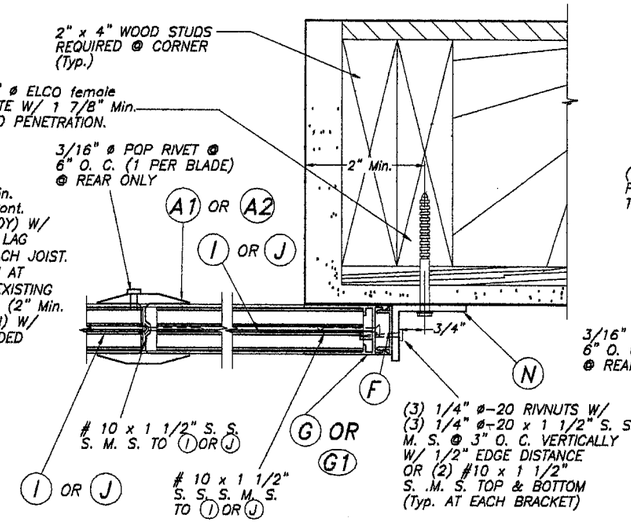

SECTION A-A

(WALL MOUNT)

SCALE : 1/4" = 1"

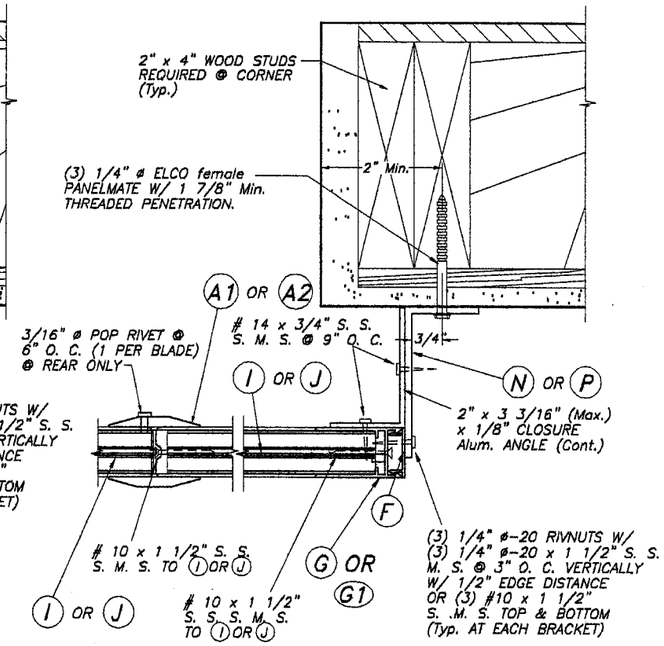

SECTION B-B

(WALL MOUNT)

SCALE : 1/4" = 1"

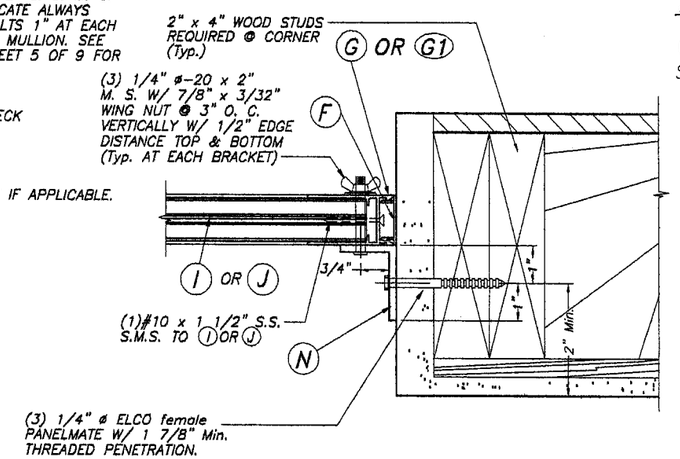

SECTION G-G

(FLOOR/CEILING MOUNT)

SCALE : 1/4" = 1"

FLOOR/CEILING MOUNTING INSTALLATION

– SECTION A SCALE: 1/4" = 1"

Approved as complying with the Florida Building Code
Date 08/31/2006
NOA# 06-0501.06
Miami Dade Product Control Division
By

INSTALLATION DETAILS ON EXISTING WOOD BUILDINGS

NOTES :

1. INSTALLATIONS ARE ONLY VALID FOR INSTALLATIONS WITH DESIGN WIND LOADS LESS OR EQUAL THAN +62.0, –75.0 p.s.f. AND Max. SHUTTER SPAN AS PER SCHEDULES ON SHEET 9 OF 9.
2. NEW 2" x 6" P. T. TO BE SOUTHERN PINE No. 2, SURFACED DRY WITH 19 % M. M. C. W/ SPECIFIC DENSITY OF 0.55.
3. FOR NEW WOOD FRAME CONSTRUCTION: WOOD MEMBERS TO BE SOUTHERN PINE No. 2, W/ SPECIFIC DENSITY OF 0.55 OR EQUAL.

3/30/06

F.B.C.(High Velocity Hurricane Zone)

TILTECO INC.
TILLIT TESTING & ENGINEERING COMPANY
6355 N.W. 36th. St., Ste. 305, VIRGINIA GARDENS, FLORIDA 33166
Phone : (305)871-1530 . Fax : (305)871-1531
EB-0006719
WALTER A. TILLIT Jr., P. E.
FLORIDA Lic. # 44167
© 2004 TILTECO INC.

ASSA / EXTRUDED BERTHA BAHAMA SHUTTER

WEST PALM INSTALLERS, INC.
(ASSA # 332)
6819 NW 84TH AVENUE
DORAL, FL. 33166
PH.:(305)406-3575, FAX:(305)406-3576

REV. No	DESCRIPTION	DATE	REV. No	DESCRIPTION	DATE
1	–	–	3	–	–
2	–	–	4	–	–

DRAWN BY: S.M.
03/30/06 DATE
06-065 DRAWING No
SHEET 8 OF 9

SCHEDULE # 1

MAXIMUM SINGLE UNIT FOR A CORRESPONDING DESIGN PRESSURE AND MOUNTING TYPE

BAHAMA SHUTTER TYPE

SINGLE UNIT ELEVATION

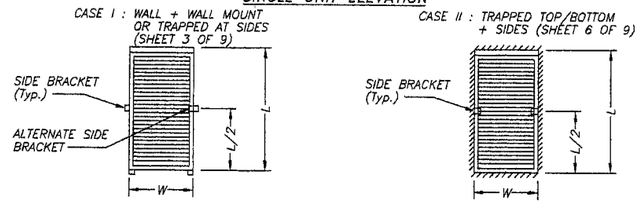

DESIGN PRESSURE RATING (p.s.f.) AND CASE #	MAXIMUM UNIT WIDTH "W" (IN)	MAXIMUM SPAN "L" (IN)		
		W/O SIDE BRACKET	W/ SIDE BRACKET	MINIMUM SEPARATION TO GLASS (IN)
CASES I & II +56.0 , -63.0	42"	52"	N/A	3 1/8"
CASES I & II +75.0 , -100.0	42"	N/A	96"	2 1/8"

SCHEDULE # 1A

MAXIMUM MULTIPLE UNIT FOR A CORRESPONDING DESIGN PRESSURE AND MOUNTING TYPE

BAHAMA SHUTTER TYPE

MULTIPLE UNIT ELEVATION

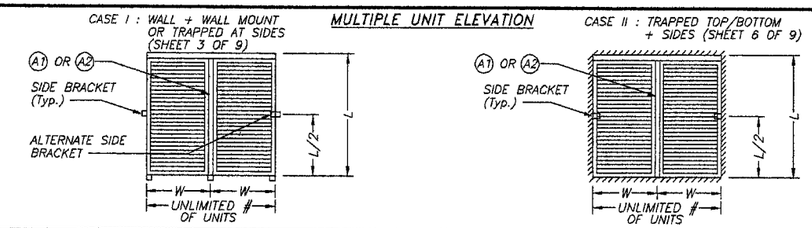

DESIGN PRESSURE RATING (p.s.f.) AND CASE #	MAXIMUM UNIT WIDTH "W" (IN)	MAXIMUM SPAN "L" (IN)			
		W/O SIDE BRACKET	W/ SIDE BRACKET	INTERIOR MULLION TYPE REQUIRED	MINIMUM SEPARATION TO GLASS (IN)
CASE I +50.0 , -43.3	36 1/2"	72 1/2"	N/A	A1	2 1/2"
CASE I +62.0 , -75.0	36 1/2"	N/A	83"	A2	2 3/8"
CASE II +62.0 , -75.0	36 1/2"	N/A	84"	A2	2 3/8"

SCHEDULE # 2

LIMITATIONS FOR SINGLE AND MULTIPLE UNITS BAHAMA SHUTTER'S UNIT WIDTH (IN), SPAN L (IN) AND CORRESPONDING MAXIMUM DESIGN PRESSURE (p.s.f.) FOR THE INSTALLATION OF SIDE & SILL BRACKETS INTO CONCRETE & MASONRY BUILDINGS BY MEANS OF (3) 1/4" ø x 7/8" CALK-IN ANCHORS *

MAXIMUM NEGATIVE DESIGN PRESSURE RATING (p.s.f.)	SINGLE UNITS				MULTIPLE UNITS			
	SIDE & SILL BRACKETS **				SIDE & SILL BRACKETS **			
	TO CONCRETE		TO BLOCK		TO CONCRETE		TO BLOCK	
	Max. "W"	Max. "L"	Max. "W"	Max. "L"	Max. "W"	Max. "L"	Max. "W"	Max. "L"
-55.7	42"	96"	42"	96"	36 1/2"	84"	36"	84"
-65.0	42"	96"	42"	96"	36 1/2"	84"	36" 31"	72" 84"
-75.0	42"	96"	42"	96"	36 1/2"	83"	36 1/2" 27"	62" 83"
-83.0	42"	96"	42"	96"	N/A	N/A	N/A	N/A
-100.0	42"	96"	42" 36"	63 73	N/A	N/A	N/A	N/A

* FOR ELCO PANELMATES ((3) 1/4" ø W/ 1 7/8" PENETRATION) USED AT SILL & SIDE BRACKETS FOR INSTALLATIONS INTO WOOD. SEE SCHEDULES # 1 & # 1A FOR SHUTTER SIZE.

** IN ANY CASE, MAXIMUM "W" & "L" VALUES W/ CORRESPONDING DESIGN LOADS SHALL NOT EXCEED MAXIMUM VALUES INDICATED ON SCHEDULES # 1 & 1A.

SCHEDULE # 3

MAXIMUM ANCHOR SPACING AT TOP FEMALE HINGES Ⓑ , Ⓒ , OR Ⓓ AS WELL AS SILL ANGLE Ⓠ AT BOTTOM (AS APPLICABLE) FOR INSTALLATIONS INTO POURED CONCRETE HEADERS AND SILL ***

DESIGN PRESSURE RATING (p. s. f.)	SINGLE & MULTIPLE UNITS
	TOP & BOTTOM TO CONCRETE
ALL PRESSURES COVERED IN SCHEDULE # 1 & # 1A	9" O.C. TOP & 7" O.C. BOTTOM.

*** SEE SHEETS 7 & 8 OF 9 FOR ANCHOR SPACING FOR INSTALLATIONS INTO WOOD FRAME BUILDINGS.

Approved as complying with the Florida Building Code
Date 08/31/2006
NOA# 06-0501.06
Miami Dade Product Control Division
By

F.B.C.(**H**igh **V**elocity **H**urricane **Z**one)

3/30/06

TILTECO INC.
TILLIT TESTING & ENGINEERING COMPANY
6355 N.W. 36th. St., Ste. 305, VIRGINIA GARDENS, FLORIDA 33166
Phone : (305)871-1530 . Fax : (305)871-1531
EB-0006719
WALTER A. TILLIT Jr., P. E.
FLORIDA Lic. # 44167

© 2004 TILTECO INC.

ASSA / EXTRUDED BERTHA BAHAMA SHUTTER

WEST PALM INSTALLERS, INC.
(ASSA # 332)
6819 NW 84TH AVENUE
DORAL, FL. 33166
PH.:(305)406-3575, FAX:(305)406-3576

REV. No	DESCRIPTION	DATE	REV. No	DESCRIPTION	DATE
1	-	-	3	-	-
2	-	-	4	-	-

DRAWN BY: S.M.
03/30/06 DATE
06-065 DRAWING No
SHEET 9 OF 9