MIAMI-DADE COUNTY

BUILDING CODE COMPLIANCE OFFICE (BCCO)
PRODUCT CONTROL DIVISION

MIAMI-DADE COUNTY, FLORIDA
METRO-DADE FLAGLER BUILDING
140 WEST FLAGLER STREET, SUITE 1603
MIAMI, FLORIDA 33130-1563
(305) 375-2901 FAX (305) 375-2908
www.buildingcodeonline.com

NOTICE OF ACCEPTANCE (NOA)

Lawson Industries, Inc.
8501 NW 90th Street
Medley, FL 33166

SCOPE:
This NOA is being issued under the applicable rules and regulations governing the use of construction materials. The documentation submitted has been reviewed by Miami-Dade County Product Control Division and accepted by the Board of Rules and Appeals (BORA) to be used in Miami Dade County and other areas where allowed by the Authority Having Jurisdiction (AHJ).

This NOA shall not be valid after the expiration date stated below. The Miami-Dade County Product Control Division (In Miami Dade County) and/or the AHJ (in areas other than Miami Dade County) reserve the right to have this product or material tested for quality assurance purposes. If this product or material fails to perform in the accepted manner, the manufacturer will incur the expense of such testing and the AHJ may immediately revoke, modify, or suspend the use of such product or material within their jurisdiction. BORA reserves the right to revoke this acceptance, if it is determined by Miami-Dade County Product Control Division that this product or material fails to meet the requirements of the applicable building code.

This product is approved as described herein, and has been designed to comply with the Florida Building Code, including the High Velocity Hurricane Zone.
DESCRIPTION: Series 9000 Aluminum Sliding Glass Door -NI
APPROVAL DOCUMENT: Drawing No. **W99-32,** titled "SGD-9000 Aluminum Sliding Glass Door (N.I.), sheets 1 through 7 of 7, prepared by Al-Farooq Corporation, dated 04/23/99 and last revised on 08/04/06, signed and sealed by Dr. Humayoun Farooq, P.E., bearing the Miami-Dade County Product Control Renewal stamp with the Notice of Acceptance number and expiration date by the Miami-Dade County Product Control Division.
MISSILE IMPACT RATING: None
LABELING: Each unit shall bear a permanent label with the manufacturer's name or logo, city, state and following statement: "Miami-Dade County Product Control Approved", unless otherwise noted herein.
RENEWAL of this NOA shall be considered after a renewal application has been filed and there has been no change in the applicable building code negatively affecting the performance of this product.
TERMINATION of this NOA will occur after the expiration date or if there has been a revision or change in the materials, use, and/or manufacture of the product or process. Misuse of this NOA as an endorsement of any product, for sales, advertising or any other purposes shall automatically terminate this NOA. Failure to comply with any section of this NOA shall be cause for termination and removal of NOA.
ADVERTISEMENT: The NOA number preceded by the words Miami-Dade County, Florida, and followed by the expiration date may be displayed in advertising literature. If any portion of the NOA is displayed, then it shall be done in its entirety.
INSPECTION: A copy of this entire NOA shall be provided to the user by the manufacturer or its distributors and shall be available for inspection at the job site at the request of the Building Official.
This NOA **revises and renews NOA # 02-0618.03** consists of this page 1 and evidence page E-1, as well as approval document mentioned above.
The submitted documentation was reviewed by **Jaime D. Gascon, P. E.**

PRODUCT CONTROL ACCEPTED

J. Gascon
10/5/06

Lawson Industries, Inc.

NOTICE OF ACCEPTANCE: EVIDENCE SUBMITTED

A. DRAWINGS

1. Manufacturer's die drawings and sections.
2. Drawing No. W99-32, titled "SGD-9000 Aluminum Sliding Glass Door (N.I.), sheets 1 through 7 of 7, prepared by Al-Farooq Corporation, dated 04/23/99 and last revised on 08/04/06, signed and sealed by Dr. Humayoun Farooq, P.E.

B. TESTS (transferred from file **# 02-0618.03**)

1. Test reports on 1) Air Infiltration Test, per FBC, TAS 202-94
   2) Uniform Static Air Pressure Test, Loading per FBC, TAS 202-94
   3) Water Resistance Test, per FBC, TAS 202-94
   4) Forced Entry Test, per FBC 2411 3.2.1 and TAS 202-94

Along with marked-up drawings and installation diagram of an Aluminum Sliding Glass Door, prepared by Fenestration Testing Laboratory, Inc., Test Report No(s). **FTL-2030**, dated 01/04/99, **FTL-2029**, dated 01/04/99, **FTL-2028**, dated 01/04/99 and **FTL-2027**, dated 01/04/99, signed and sealed by Gilbert Diamond, P.E.

C. CALCULATIONS

1. Anchor verification calculation dated 08/21/06, complying w/ FBC 2004, prepared by Al-Farooq Corporation, signed and sealed by Dr. Humayoun Farooq, P.E.
2. Glazing complies with ASTME-1300-98.

D. QUALITY ASSURANCE

1. Miami Dade Building Code Compliance Office (BCCO).

E. MATERIAL CERTIFICATIONS

1. None

F. STATEMENTS

1. Statement letter of compliance w/FBC-2004, signed by Dr. Humayoun Farooq, P.E.
2. Statement letter of compliance and of no financial interest, dated 08/01/06, signed and sealed by Dr. Humayoun Farooq, P.E.

G. OTHER

1. Letter from the consultant stating that the product is in compliance with the Florida Building Code.

Jaime D. Gascon, P. E.
Chief, Product Control Division
NOA No 06-0911.08
Expiration Date: August 26, 2012
Approval Date: October 26, 2006

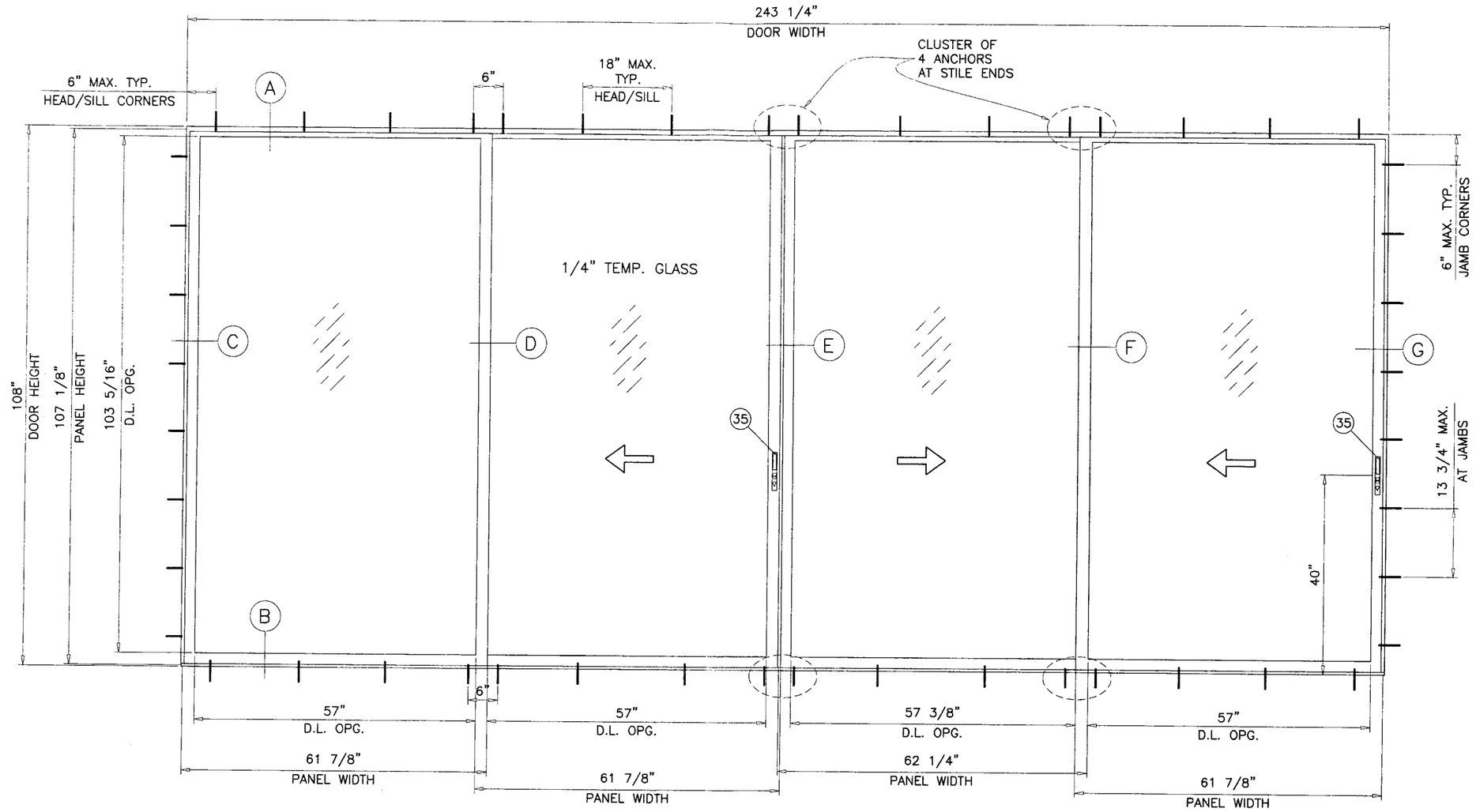

TYPICAL ELEVATION
TESTED UNIT (OXXX)

SGD-9000 ALUMINUM SLIDING GLASS DOOR

SEE SHEET 2 FOR DESIGN LOAD CAPACITY OF DESIRED PANEL SIZE.

THIS PRODUCT HAS BEEN DESIGNED AND TESTED TO COMPLY WITH THE REQUIREMENTS OF THE FLORIDA BUILDING CODE 2004 EDITION (REV. 2005) INCLUDING HIGH VELOCITY HURRICANE ZONE (HVHZ).

WOOD BUCKS BY OTHERS, MUST BE ANCHORED PROPERLY TO TRANSFER LOADS TO THE STRUCTURE.

ANCHORS SHALL BE AS LISTED, SPACED AS SHOWN ON DETAILS, ANCHORS EMBEDMENT TO BASE MATERIAL SHALL BE BEYOND WALL DRESSING OR STUCCO.

ANCHORING OR LOADING CONDITIONS NOT SHOWN IN THESE DETAILS ARE NOT PART OF THIS APPROVAL.

A LOAD DURATION INCREASE IN ALLOWABLE STRESS IS USED IN DESIGN OF ANCHORS INTO WOOD ONLY.

MATERIALS INCLUDING BUT NOT LIMITED TO STEEL/METAL SCREWS, THAT COME INTO CONTACT WITH OTHER DISSIMILAR MATERIALS SHALL MEET THE REQUIREMENTS OF 2004 FLORIDA BLDG. CODE SECTION 2003.8.4 (SUPPLEMENT 2005).

DOORS NOT RATED FOR IMPACT.

INSTALLATION OF THIS PRODUCT IN THE HVHZ AREA REQUIRES THE USE OF APPROVED SHUTTERS OR EXTERNAL PROTECTION DEVICES COMPLYING WITH HVHZ REQUIREMENTS.

NON-IMPACT
HEAVY REINFORCING

Engr: DR. HUMAYOUN FAROOQ
STRUCTURES
FLA. PE # 16557
C.A.N. 3538

AUG 28 2006

PRODUCT RENEWED
as complying with the Florida
Building Code
Acceptance No. 06-0911.08
Expiration Date 08/26/12
By
Miami-Dade Product Control
Division

AL-FAROOQ CORPORATION
ENGINEERS, PLANNERS & PRODUCT DESIGN
1235 SW 87 AVE
MIAMI, FLORIDA 33174
TEL. (305) 264-8100 FAX. (305) 262-6978
COMP-ANL\W99-32LI

SGD-9000 ALUM. SLIDING GLASS DOOR (N.I.)

LAWSON INDUSTRIES INC.
8501 N.W. 90 STREET
MEDLEY, FL. 33166
TEL. (305) 696-8660 FAX (305) 696-6006

revisions:

no	date	by	description
A	7.13.99		GENERAL REVISION
B	05.24.02		APPLICABLE CODE REV.
C	08.04.06		UPDATED FOR 2004 FBC

date: 04-23-99
scale: 1/2"=1'-0"
dr. by: HAMID
chk. by:

drawing no.
W99-32

DESIGN LOAD CAPACITY – PSF									
PANEL WIDTH NOMINAL FT./IN.	DOOR HEIGHT FT./IN.	1/4" TEMP. GLASS							
		1-3/4" SILL		2-1/4" SILL		2-1/2" SILL		3" SILL	
		EXT. (+)	INT. (-)	EXT. (+)	INT. (-)	EXT. (+)	INT. (-)	EXT. (+)	INT. (-)
2/6	6/8	40.7	110.1	56.7	110.1	63.3	110.1	77.8	110.1
3/0		40.7	96.9	56.7	96.9	63.3	96.9	77.8	96.9
4/0		40.7	81.3	56.7	81.3	63.3	81.3	77.8	81.3
5/0		40.7	73.3	56.7	73.3	63.3	73.3	73.3	73.3
2/6	8/0	40.7	88.2	56.7	88.2	63.3	88.2	77.8	88.2
3/0		40.7	76.9	56.7	76.9	63.3	76.9	76.9	76.9
4/0		40.7	63.0	56.7	63.0	63.0	63.0	63.0	63.0
5/0		40.7	55.4	55.4	55.4	55.4	55.4	55.4	55.4
2/6	9/0	40.7	76.7	56.7	76.7	63.3	76.7	76.7	76.7
3/0		40.7	66.6	56.7	66.6	63.3	66.6	66.6	66.6
4/0		40.7	54.0	54.0	54.0	54.0	54.0	54.0	54.0
5/0		40.7	46.7	46.7	46.7	46.7	46.7	46.7	46.7

USE EXT. DESIGN LOADS SHOWN ABOVE FOR INSTALLATIONS WHERE WATER INFILTRATION REQUIREMENTS MUST BE MET.
USE EXT. LOAD = INT. LOAD FOR INSTALLATIONS WHERE WATER INFILTRATION REQUIREMENTS ARE NOT APPLICABLE.

GLASS CAPACITIES ON THIS CHART ARE BASED ON
ASTM E1300-98 (60 SEC. WIND)

THIS APPROVES DOORS USING TWO (2) OR THREE (3) TRACK FRAMES WITH ANY NUMBER OF PANELS THAT CONTAIN THE STILE CONFIGURATIONS SHOWN ON SHEETS 4 AND 6, I.E. XX, OX, XO, XXX, OXO, OXXO

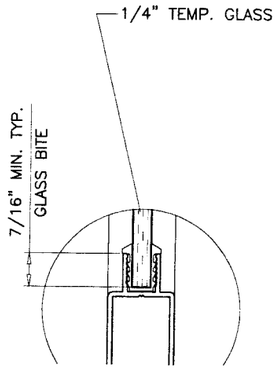

GLAZING DETAIL

ITEM #	PART #	QUANTITY	DESCRIPTION	MATERIAL	MANF./SUPPLIER/REMARKS
1	L-9001	1	FRAME HEAD (2 TRACK)	6063-T6 ALUM.	ALUMAX, WELLS OR EQUIV.
2	L-9002	1	FRAME SILL (2 TRACK)	6063-T6 ALUM.	ALUMAX, WELLS OR EQUIV.
3	L-9003	2	FRAME JAMB (2 TRACK)	6063-T5 ALUM.	ALUMAX, WELLS OR EQUIV.
4	L-9004	1/ PANEL	PANEL TOP RAIL	6063-T5 ALUM.	ALUMAX, WELLS OR EQUIV.
5	L-9005	1/ PANEL	PANEL BOTTOM RAIL	6063-T5 ALUM.	ALUMAX, WELLS OR EQUIV.
6	L-9006	AS REQD.	LOCK STILE / FIXED STILE	6063-T5 ALUM.	ALUMAX, WELLS OR EQUIV.
7	L-9007	AS REQD.	SINGLE INTERLOCK STILE	6063-T5 ALUM.	ALUMAX, WELLS OR EQUIV.
8	L-9008	AS REQD.	ASTRAGAL STILE	6063-T6 ALUM.	ALUMAX, WELLS OR EQUIV.
9	1292-0001	AS REQD.	1/4" GLAZING CHANNEL	VINYL	#1292 – WIBORG
10	FS-011	4/ PANEL	PANEL ASS'Y SCREW @ TOP RAIL		#10 x 5/8" P.H. – PHILLIPS
11	FS-034	2/ PANEL	PANEL ASS'Y SCREW @ BOTTOM RAIL	–	#10-24 X 1" P.H.-PHIL./ "T"
12	FS-028	8	FRAME ASSEMBLY SCREW	–	#8 X 7/16" P.H-PHIL. / SMS
13	7519-6001-7	AS REQD.	PILE WTS'P. @ JAMB/ASTRAGAL	–	(0.187"w. x 0.200"h.)-Schlegel
14	7524-6001-6	AS REQD.	PILE WTS'P. @ TOP RAILS	–	(0.187"w. x 0.250"h.)-Schlegel
15	7529-6001-7	AS REQD.	PILE WTS'P. @ BOTTOM RAILS	–	(0.187"w. x 0.300"h.)-Schlegel
16	7520-5001-7	AS REQD.	PILE WTS'P. @ INTERLOCKS	–	(0.187"w. x 0.210"h.)-Schlegel
17		AS REQD.	SILL RISER	ALUMINUM	SILICONED IN PLACE
18	L-9018	3 OR 4 *	FIXED PANEL JAMB CLIP	6063-T5 ALUM.	GW-27153
19	FS-029	1/ CLIP	FIXED PANEL CLIP SCREW	–	#8 X 5/8" PH.-PHI / SDS
20	AR-001	1	FIXED INTERLOCK ANGLE	ALUMINUM	3"x 1 1/2"x 1 9/16"x 1/8"
21	AR-002	1	MOVING INTERLOCK ANGLE/CLIP	ALUMINUM	1 1/2" X 3/4" X 2" X 1/8"
22	L-9022	1	ASTRAGAL RETAINER CLIP	6063-T6 ALUM.	AF-10798
23	AR-020	AS REQD.	REINF. @ SINGLE INTERLOCK	STEEL	1/2" X 1 1/4" BAR
24	AR-021	AS REQD.	REINF. @ DOUBLE INTERLOCK\ASTRAGAL	STEEL	1/2" X 1 1/2" BAR
25	AR-023	1	REINF. @ BOTT. RAIL	ALUMINUM	3/4" X 3/4" X .062" TUBE
26	AR-024	AS REQD.	REINF. STEEL @ INTERLOCK	STEEL	1/4" x 1" BAR
27	*	OPTIONAL	SCREEN JAMB ADAPTER	6063-T6 ALUM.	–
28	L-9028	1	FRAME HEAD (3 TRACK)	6063-T6 ALUM.	–
29	L-9029	1	FRAME SILL (3 TRACK)	6063-T6 ALUM.	–
30	L-9030	2	FRAME JAMB (3 TRACK)	6063-T5 ALUM.	–
31	L-9031	AS REQD.	DOUBLE INTERLOCK STILE	6063-T6 ALUM.	OPTIONAL
32	1071a	2/ PANEL	PANEL TOP GUIDE	NYLON	–
33	1072a	2/ PANEL	PANEL BOTTOM GUIDE	NYLON	–
34	HW4-WHL	2/ PANEL	PANEL SINGLE ROLLER		6 COMPONENT – ASS'Y 150
35	HC-038	AS REQ'D.	DOOR LOCK ASSEMBLY	–	INT. & EXT. PULLS, CAM, KEEPER

* 4 ON 9/0 HIGH DOORS ONLY

Engr: DR. HUMAYOUN FAROOQ
STRUCTURES
FLA. PE # 16557
C.A.N. 3538

AUG 28 2006

PRODUCT RENEWED
as complying with the Florida Building Code
Acceptance No 06-0911.08
Expiration Date 08/28/12
By
National Evals Product Control Division

AL-FAROOQ CORPORATION
ENGINEERS, PLANNERS & PRODUCT DESIGN
1235 SW 87 AVE
MIAMI, FLORIDA 33174
TEL. (305) 264-8100 FAX. (305) 262-6978
COMP-ANL\W99-32LI

SGD-9000 ALUM. SLIDING GLASS DOOR (N.I.)

LAWSON INDUSTRIES INC.
8501 N.W. 90 STREET
MEDLEY, FL. 33166
TEL. (305) 696-8660 FAX (305) 696-6006

revisions:

no	date	by	description
C	08.04.06		UPDATED FOR 2004 FBC

date: 04-23-99
scale: 1/2"=1'-0"
dr. by: HAMID
chk. by:

drawing no.
W99-32

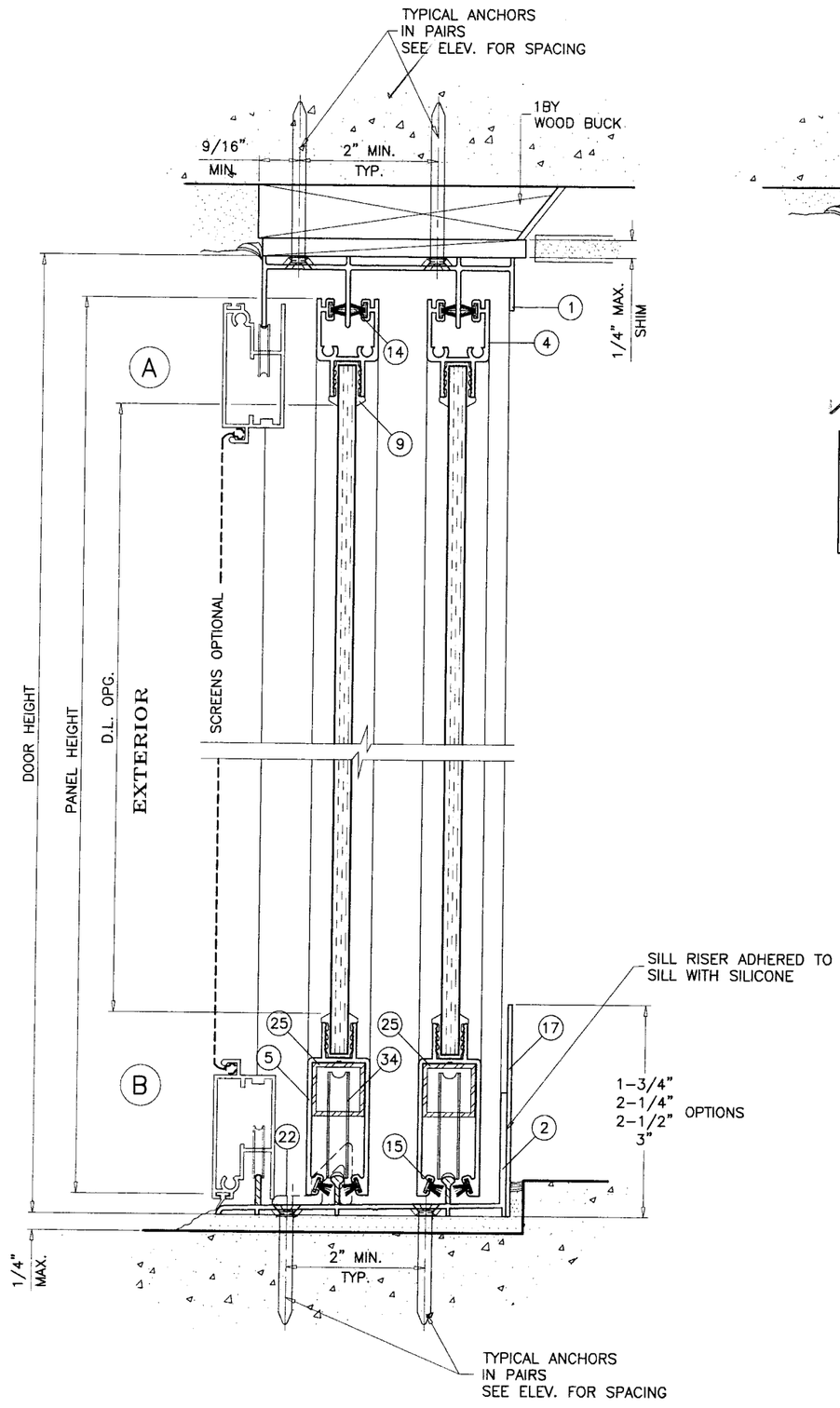

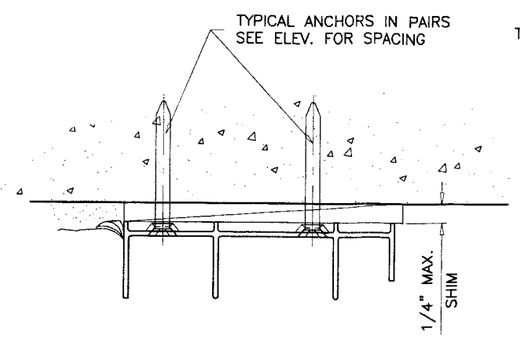

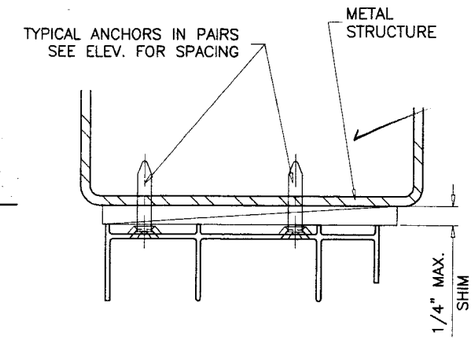

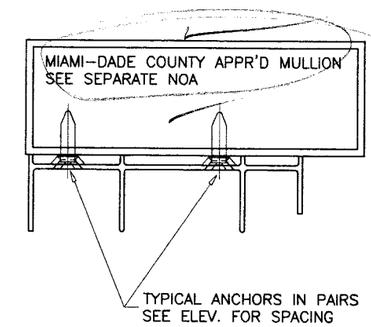

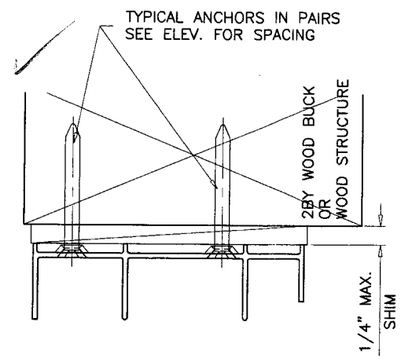

WOOD BUCKS AND METAL STRUCTURES NOT BY LAWSON IND. MUST SUPPORT LOADS IMPOSED BY GLAZING SYSTEM AND TRANSFER THEM TO THE BUILDING STRUCTURE.

TYPICAL ANCHORS: SEE ELEV. FOR SPACING

1/4" DIA TAPCONS

INTO 2BY WOOD BUCKS OR WOOD STRUCTURE
1-3/8" MIN. PENETRATION INTO WOOD

THRU 1BY WOOD BUCKS INTO MASONRY OR CONC.
1-1/4" MIN. EMBED INTO MASONRY OR CONC.

DIRECTLY INTO CONCRETE OR MASONRY
1-1/4" MIN. EMBED INTO CONCRETE OR MASONRY

#14 SMS OR SELF DRILLING SCREWS

INTO METAL STRUCTURES

STEEL : 12 GA. MIN. (Fy = 36 KSI MIN.)
ALUMINUM : 1/8" THK. MIN. (6063-T5 MIN.)
(STEEL IN CONTACT WITH ALUMINUM TO BE PLATED OR PAINTED)

#10 SMS

INTO MIAMI-DADE COUNTY APPROVED MULLIONS (MIN. THK. = 1/8")
(NO SHIM SPACE)

TYPICAL EDGE DISTANCES

INTO CONCRETE AND MASONRY = 2-1/2" MIN.
INTO WOOD STRUCTURE = 1" MIN.
INTO METAL STRUCTURE = 3/4" MIN.

SEALANTS:

ALL FRAME AND PANEL JOINT, INSTALLATION SCREWS AND HEADS OF ANCHOR SCREWS AT SILL TO BE SEALED WITH SEALANT.

Engr: DR. HUMAYOUN FAROOQ
STRUCTURES
FLA. PE # 16557
C.A.N. 3538

AUG 28 2006

PRODUCT RENEWED
as complying with the Florida Building Code
Acceptance No. 06-0911.08
Expiration Date 08/26/12
By
Miami Dade Product Control Division

TWO (2) TRACK SECTION

AL-FAROOQ CORPORATION
ENGINEERS, PLANNERS & PRODUCT DESIGN
1235 SW 87 AVE
MIAMI, FLORIDA 33174
TEL. (305) 264-8100 FAX. (305) 262-6978
COMP-ANL\W99-32LI

SGD-9000 ALUM. SLIDING GLASS DOOR (N.I.)

LAWSON INDUSTRIES INC.
8501 N.W. 90 STREET
MEDLEY, FL. 33166
TEL. (305) 696-8660 FAX (305) 696-6006

revisions:

no	date	by	description
C	08.04.06		UPDATED FOR 2004 FBC

date: 04-23-99
scale: 1/2" = 1"
dr. by: HAMID
chk. by:

drawing no.
W99-32

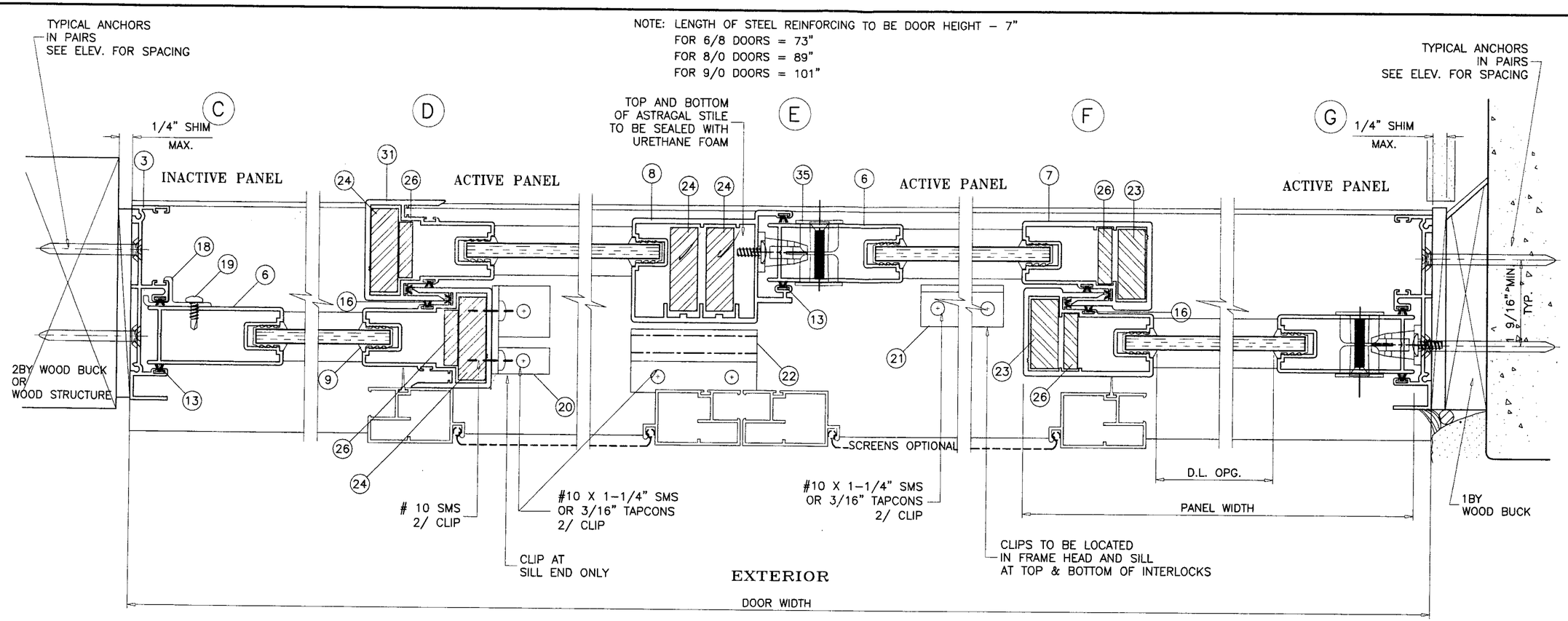

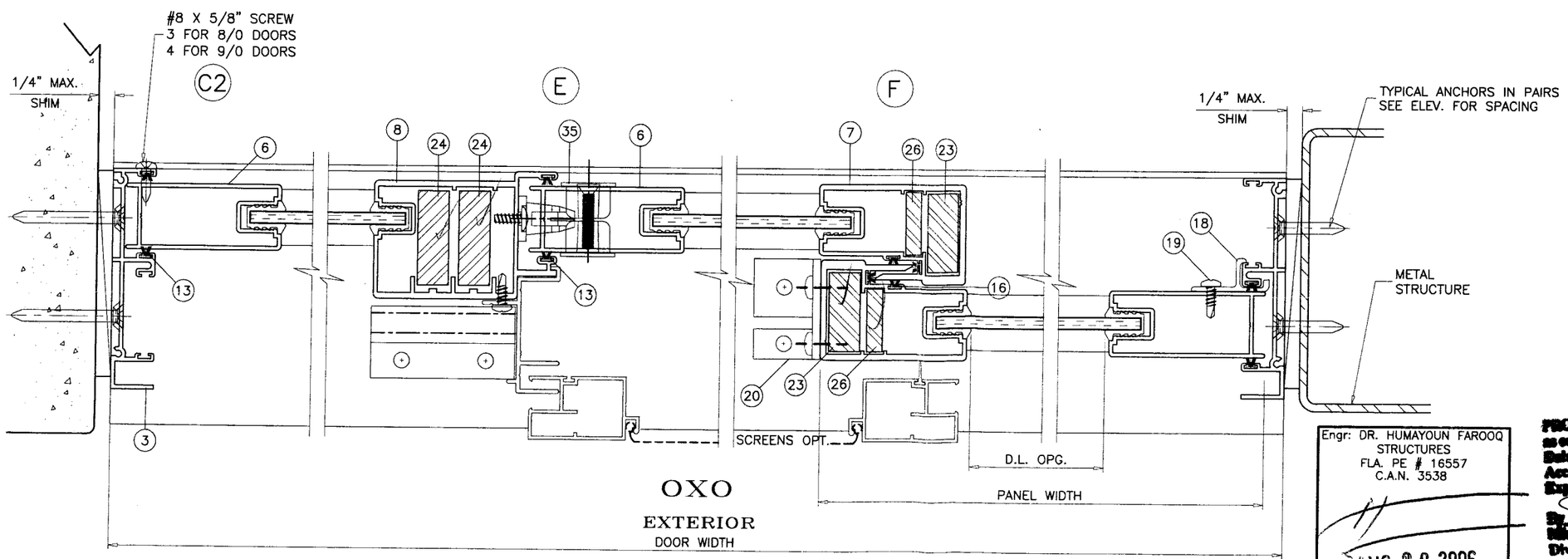

TWO (2) TRACK SECTION

Engr: DR. HUMAYOUN FAROOQ
STRUCTURES
FLA. PE # 16557
C.A.N. 3538

AUG 28 2006

PRODUCT RENEWED
as complying with the Florida
Building Code
Acceptance No. 06-0911.08
Expiration Date 08/26/07
By
Miami-Dade Product Control
Division

AL-FAROOQ CORPORATION
ENGINEERS, PLANNERS & PRODUCT DESIGN
1235 SW 87 AVE
MIAMI, FLORIDA 33174
TEL. (305) 264-8100 FAX. (305) 262-6978

COMP-ANL\W99-32LI

SCD-9000 ALUM. SLIDING GLASS DOOR (N.I.)

LAWSON INDUSTRIES INC.
8501 N.W. 90 STREET
MEDLEY, FL. 33166
TEL. (305) 696-8660 FAX (305) 696-6006

revisions:			
no	date	by	description
C	08.04.06		UPDATED FOR 2004 FBC

date: 04-23-99
scale: 1/2" = 1"
dr. by: HAMID
chk. by:

drawing no.
W99-32

sheet 4 of 7

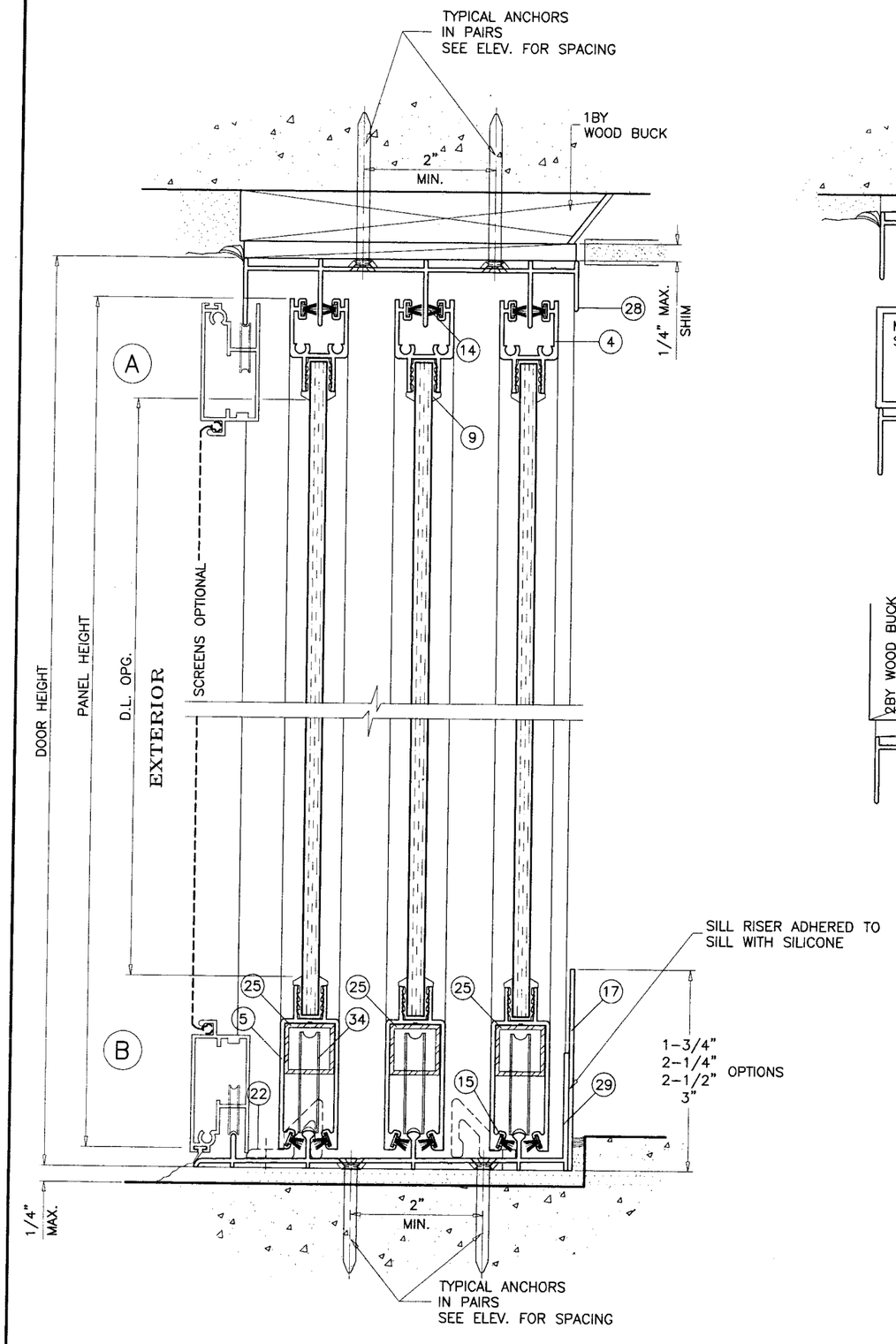

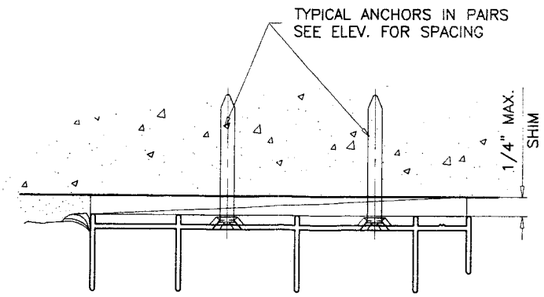

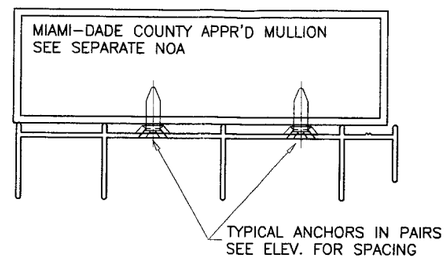

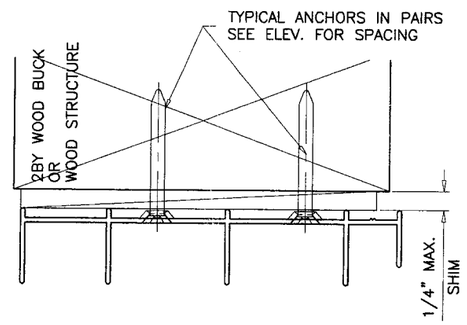

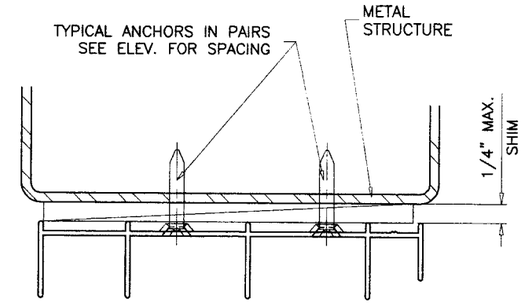

WOOD BUCKS AND METAL STRUCTURES NOT BY LAWSON IND. MUST SUPPORT LOADS IMPOSED BY GLAZING SYSTEM AND TRANSFER THEM TO THE BUILDING STRUCTURE.

TYPICAL ANCHORS: SEE ELEV. FOR SPACING

1/4" DIA TAPCONS

INTO 2BY WOOD BUCKS OR WOOD STRUCTURE
1-3/8" MIN. PENETRATION INTO WOOD

THRU 1BY WOOD BUCKS INTO MASONRY OR CONC.
1-1/4" MIN. EMBED INTO MASONRY OR CONC.

DIRECTLY INTO CONCRETE OR MASONRY
1-1/4" MIN. EMBED INTO CONCRETE OR MASONRY

#14 SMS OR SELF DRILLING SCREWS

INTO METAL STRUCTURES

STEEL : 12 GA. MIN. (Fy = 36 KSI MIN.)
ALUMINUM : 1/8" THK. MIN. (6063-T5 MIN.)
(STEEL IN CONTACT WITH ALUMINUM TO BE PLATED OR PAINTED)

#10 SMS

INTO MIAMI-DADE COUNTY APPROVED MULLIONS (MIN. THK. = 1/8")
(NO SHIM SPACE)

TYPICAL EDGE DISTANCES

INTO CONCRETE AND MASONRY = 2-1/2" MIN.
INTO WOOD STRUCTURE = 1" MIN.
INTO METAL STRUCTURE = 3/4" MIN.

SEALANTS:

ALL FRAME AND PANEL JOINT, INSTALLATION SCREWS AND HEADS OF ANCHOR SCREWS AT SILL TO BE SEALED WITH SEALANT.

THREE (3) TRACK SECTION

Engr: DR. HUMAYOUN FAROOQ
STRUCTURES
FLA. PE # 16557
C.A.N. 3538

AUG 28 2006

PRODUCT RENEWED
as complying with the Florida Building Code
Acceptance No 06-0911.08
Expiration Date 08/26/12
By [signature]
Miami-Dade Product Control Division

AL-FAROOQ CORPORATION
ENGINEERS, PLANNERS & PRODUCT DESIGN
1235 SW 87 AVE
MIAMI, FLORIDA 33174
TEL. (305) 264-8100 FAX. (305) 262-6978
COMP-ANL\W99-32LI

SGD-9000 ALUM. SLIDING GLASS DOOR (N.I.)

LAWSON INDUSTRIES INC.
8501 N.W. 90 STREET
MEDLEY, FL. 33166
TEL. (305) 696-8660 FAX (305) 696-6006

revisions:

no	date	by	description
C	08.04.06		UPDATED FOR 2004 FBC

date: 04-23-99
scale: 1/2" = 1"
dr. by: HAMID
chk. by:

drawing no. W99-32

NOTE: LENGTH OF STEEL REINFORCING TO BE DOOR HEIGHT – 7"
FOR 6/8 DOORS = 73"
FOR 8/0 DOORS = 89"
FOR 9/0 DOORS = 101"

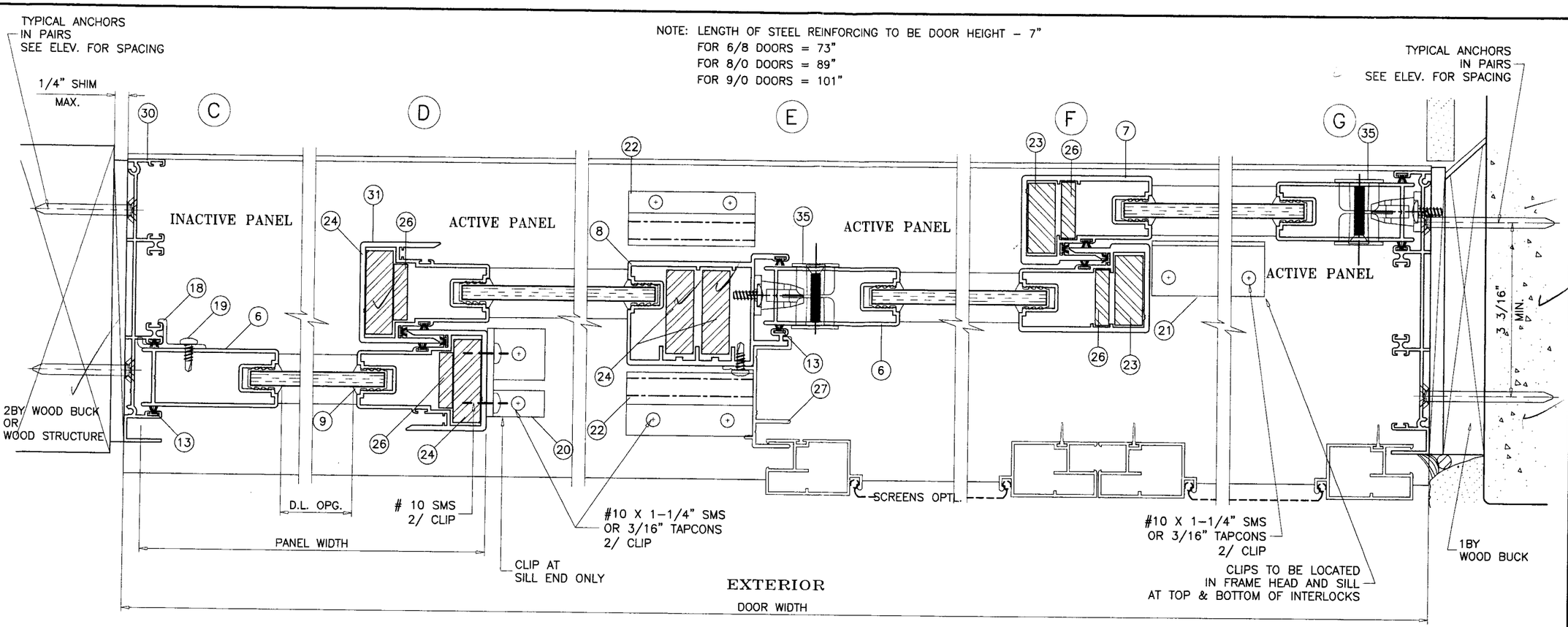

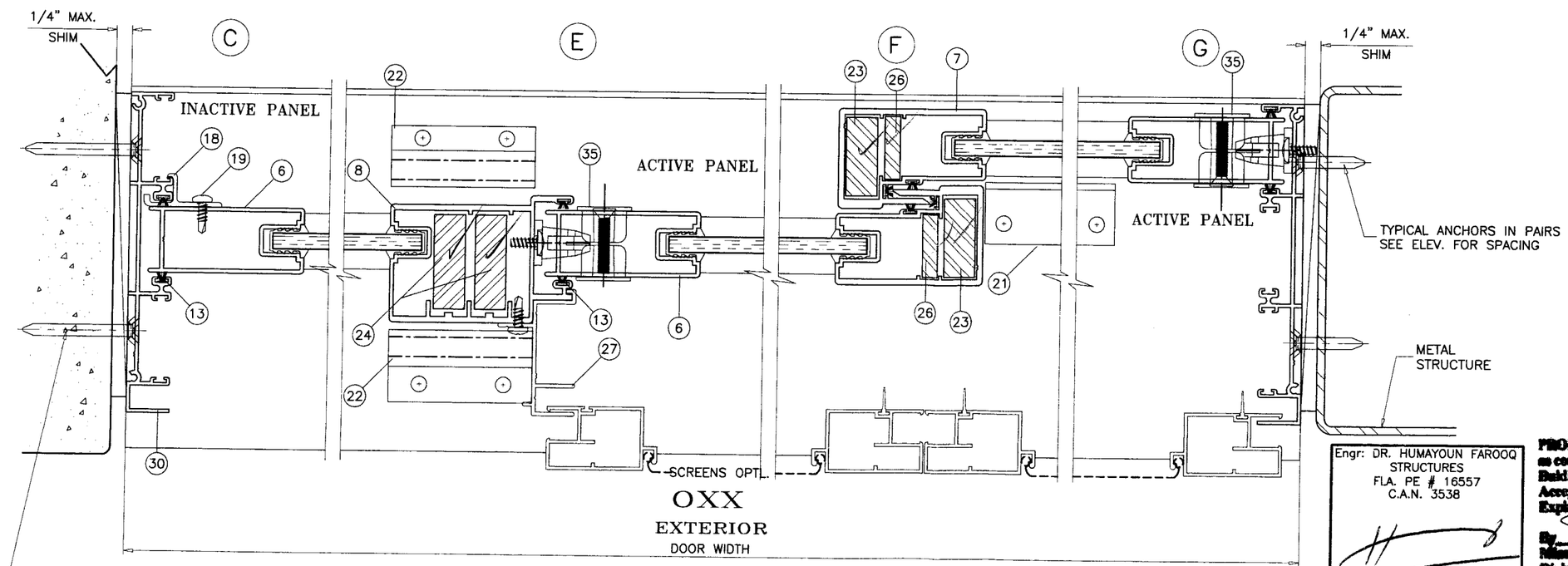

THREE (3) TRACK SECTION

Engr: DR. HUMAYOUN FAROOQ
STRUCTURES
FLA. PE # 16557
C.A.N. 3538

AUG 28 2006

PRODUCT RENEWED
as complying with the Florida Building Code
Acceptance No. 06-0911.08
Expiration Date 08/26/12
By _____
Miami Dade Product Control Division

AL-FAROOQ CORPORATION
ENGINEERS, PLANNERS & PRODUCT DESIGN
1235 SW 87 AVE
MIAMI, FLORIDA 33174
TEL. (305) 264-8100 FAX. (305) 262-6978
COMP-ANL\W99-32LI

SGD-9000 ALUM. SLIDING GLASS DOOR (N.I.)

LAWSON INDUSTRIES INC.
8501 N.W. 90 STREET
MEDLEY, FL. 33166
TEL. (305) 696-8660 FAX (305) 696-6006

no	date	by	description
C	08.04.06		UPDATED FOR 2004 FBC

revisions:

date: 04-23-99
scale: 1/2" = 1"
dr. by: HAMID
chk. by:

drawing no. W99-32

sheet 6 of 7

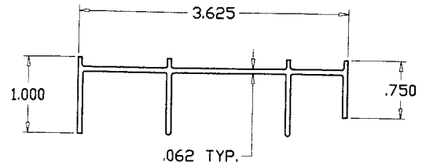

FRAME HEAD (2) TRACK

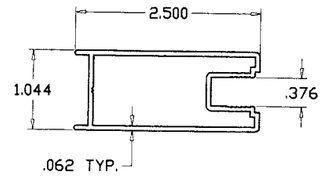

LOCK STILE

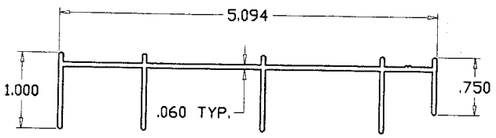

FRAME HEAD (3) TRACK

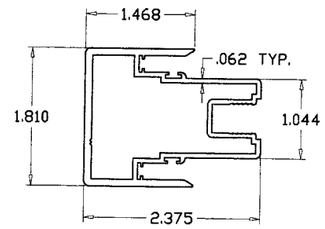

DOUBLE INTERLOCK

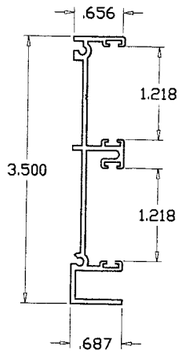

FRAME JAMB (2) TRACK

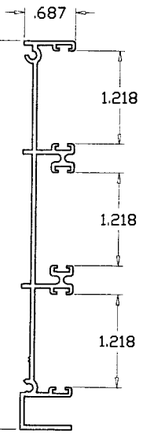

FRAME JAMB (3) TRACK

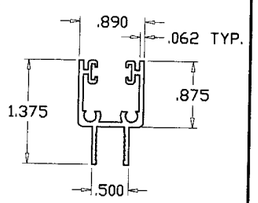

PANEL TOP RAIL

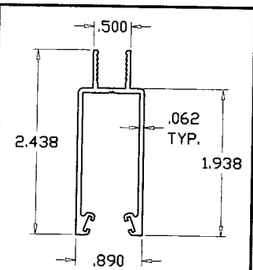

PANEL BOTTOM RAIL

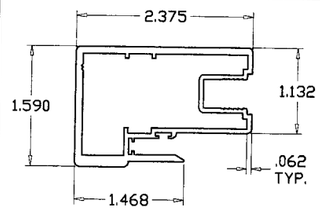

SINGLE INTERLOCK

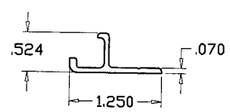

FIXED PANEL CLIP

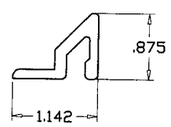

ASTRAGAL RETAINER CLIP

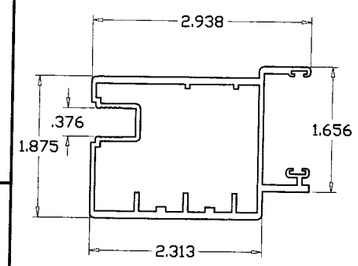

ASTRAGAL STILE

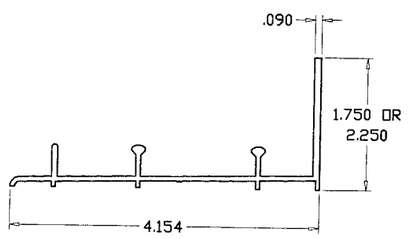

FRAME SILL (2) TRACK

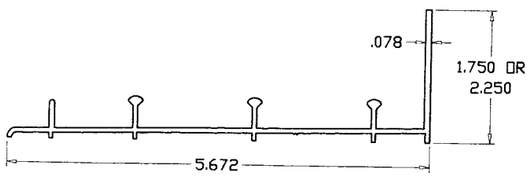

FRAME SILL (3) TRACK

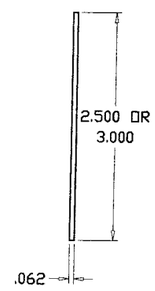

SILL RISER
FOR 2 & 3 TRACKS

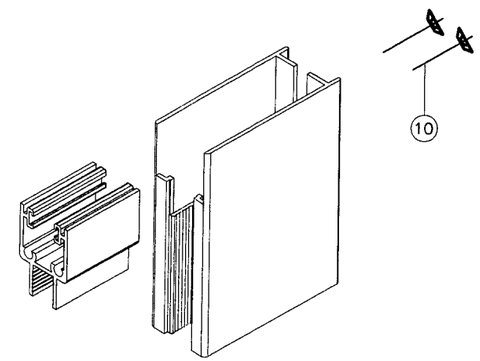

PANEL TOP CORNER

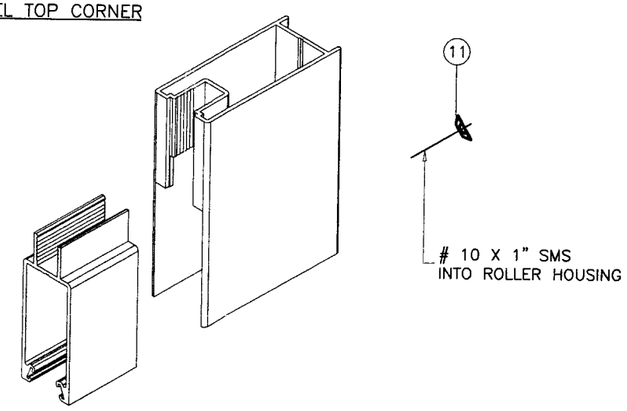

PANEL BOTTOM CORNER

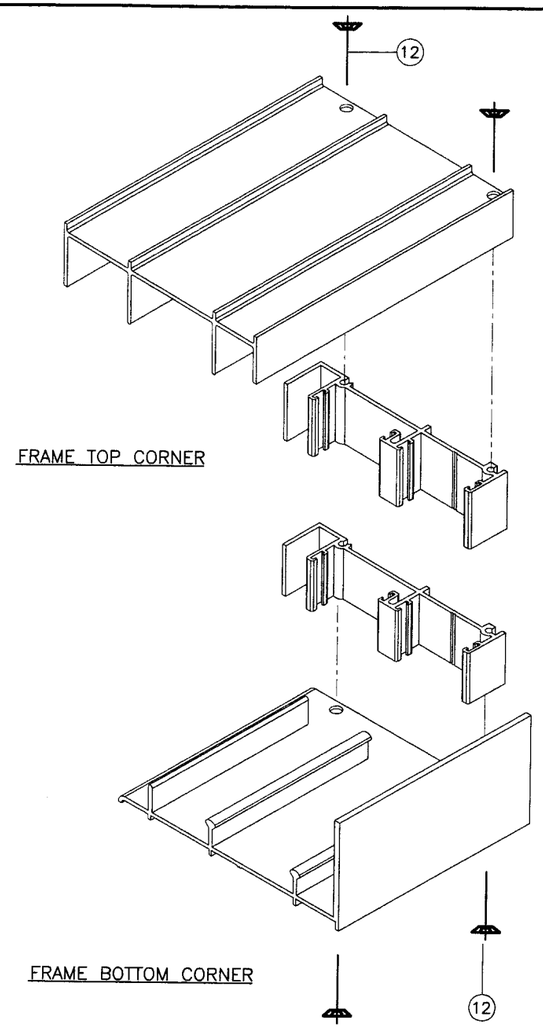

FRAME TOP CORNER

FRAME BOTTOM CORNER

Engr: DR. HUMAYOUN FAROOQ
STRUCTURES
FLA. PE # 16557
C.A.N. 3538

AUG 28 2006

PRODUCT RENEWED
as complying with the Florida Building Code
Acceptance No. 06-0911.08
Expiration Date 08/26/12
By
Miami Dade Product Control Division

AL-FAROOQ CORPORATION
ENGINEERS, PLANNERS & PRODUCT DESIGN
1235 SW 87 AVE
MIAMI, FLORIDA 33174
TEL. (305) 264-8100 FAX. (305) 262-6978

COMP-ANL\W99-32LI

SGD-9000 ALUM. SLIDING GLASS DOOR (N.I.)

LAWSON INDUSTRIES INC.
8501 N.W. 90 STREET
MEDLEY, FL. 33166
TEL. (305) 696-8660 FAX (305) 696-6006

revisions:

no	date	by	description
C	08.04.06		UPDATED FOR 2004 FBC

date: 04-23-99
scale: 1/2" = 1"
dr. by: HAMID
chk. by:

drawing no.
W99-32

sheet 7 of 7