MIAMI-DADE

BUILDING CODE COMPLIANCE OFFICE (BCCO)
PRODUCT CONTROL DIVISION

MIAMI-DADE COUNTY, FLORIDA
METRO-DADE FLAGLER BUILDING
140 WEST FLAGLER STREET, SUITE 1603
MIAMI, FLORIDA 33130-1563
(305) 375-2901 FAX (305) 375-2908

NOTICE OF ACCEPTANCE (NOA)

Republic Powdered Metals, Inc.
2628 Pearl Road
Medina, OH 44256

SCOPE:

This NOA is being issued under the applicable rules and regulations governing the use of construction materials. The documentation submitted has been reviewed by Miami-Dade County Product Control Division and accepted by the Board of Rules and Appeals (BORA) to be used in Miami Dade County and other areas where allowed by the Authority Having Jurisdiction (AHJ).

This NOA shall not be valid after the expiration date stated below. The Miami-Dade County Product Control Division (In Miami Dade County) and/or the AHJ (in areas other than Miami Dade County) reserve the right to have this product or material tested for quality assurance purposes. If this product or material fails to perform in the accepted manner, the manufacturer will incur the expense of such testing and the AHJ may immediately revoke, modify, or suspend the use of such product or material within their jurisdiction. BORA reserves the right to revoke this acceptance, if it is determined by Miami-Dade County Product Control Division that this product or material fails to meet the requirements of the applicable building code.

This product is approved as described herein, and has been designed to comply with the Florida Building Code and the High Velocity Hurricane Zone of the Florida Building Code.

DESCRIPTION: AlumAnation 301

LABELING: Each unit shall bear a permanent label with the manufacturer's name or logo, city, state and following statement: "Miami-Dade County Product Control Approved", unless otherwise noted herein.

RENEWAL of this NOA shall be considered after a renewal application has been filed and there has been no change in the applicable building code negatively affecting the performance of this product.

TERMINATION of this NOA will occur after the expiration date or if there has been a revision or change in the materials, use, and/or manufacture of the product or process. Misuse of this NOA as an endorsement of any product, for sales, advertising or any other purposes shall automatically terminate this NOA. Failure to comply with any section of this NOA shall be cause for termination and removal of NOA.

ADVERTISEMENT: The NOA number preceded by the words Miami-Dade County, Florida, and followed by the expiration date may be displayed in advertising literature. If any portion of the NOA is displayed, then it shall be done in its entirety.

INSPECTION: A copy of this entire NOA shall be provided to the user by the manufacturer or its distributors and shall be available for inspection at the job site at the request of the Building Official.

This NOA renews NOA No. 02-0905.01 and consists of pages 1 through 3.
The submitted documentation was reviewed by Jorge L. Acebo.

ROOFING SYSTEM APPROVAL

Category: Roofing
Sub-Category: Cements and Coatings
Fire Classification: See General Limitation #1

EVIDENCE SUBMITTED

Test Agency	Test Identifier	Test Name/Report	Date
Underwriter Laboratories, Inc.	R8480	Wing Uplift and Fire Classification	
PRI Asphalt Technologies, Inc.		ASTM D 4479	7/3/96
PRI Asphalt Technologies, Inc.		ASTM D 1227	7/3/96
PRI Asphalt Technologies, Inc.		ASTM D 4586	7/3/96
PRI Asphalt Technologies, Inc.		ASTM D 2824	5/25/99

PHYSICAL PROPERTIES OF COMPONENTS

Tradename: **AlumAnation 301**

Thickness: See Systems Approvals Below

Specifications: ASTM D 2824, Type III

Description: An asphalt-base, heavily fibrated aluminum roof coating fomulated with a blend of rust inhibiting oils. Used as an exterior grade maintenance coating used to provide a protective and reflective weathering surface for all types of vertical and horizontal surfaces, such as asphalt emulsion coated roof surfaces, granule surfaced modified bitumen, and metal.

Container Size: 5 and 55 gallons. Note all precautions on container.

Systems Approvals: Methods of application and quantities shall comply specific Roof assembly, Product Control Notice of Acceptance.

LIMITATIONS:

1. Fire classification is not part of this acceptance, refer to a current Approved Roofing Materials Directory for fire ratings of this product.

2. Republic Powdered Metals, Inc. products shall not be applied in inclement weather conditions.

3. The products listed herein are components of roof assemblies and are approved for use with roof assemblies that list any of the products listed herein as part of their roof assemblies Notice of Acceptance.

4. All products listed herein shall have an unannounced follow-up quality control program from an approved listing agency. Follow up test results shall be made available to BCCO upon request.

5. All approved products listed herein shall be labeled in compliance with TAS 121.

6. Change in materials, use, or manufacture of any of the products listed herein shall be cause for termination of this Notice of Acceptance

7. Republic Powdered Metals, Inc shall be applied in accordance with manufacturer's published application instructions.

END OF THIS ACCEPTANCE

MIAMI-DADE
BUILDING CODE COMPLIANCE OFFICE (BCCO)
PRODUCT CONTROL DIVISION

MIAMI-DADE COUNTY, FLORIDA
METRO-DADE FLAGLER BUILDING
140 WEST FLAGLER STREET, SUITE 1603
MIAMI, FLORIDA 33130-1563
(305) 375-2901 FAX (305) 375-2908

NOTICE OF ACCEPTANCE (NOA)

Air Vent, Inc.
4117 Pinnacle Point Drive
Dallas, TX. 75212

SCOPE: This NOA is being issued under the applicable rules and regulations governing the use of construction materials. The documentation submitted has been reviewed by the BCCO and accepted by the Building Code and Product Review Committee to be used in Miami Dade County and other areas where allowed by the Authority Having Jurisdiction (AHJ).

This NOA shall not be valid after the expiration date stated below. The BCCO (In Miami Dade County) and/or the AHJ (in areas other than Miami Dade County) reserve the right to have this product or material tested for quality assurance purposes. If this product or material fails to perform in the accepted manner, the manufacturer will incur the expense of such testing and the AHJ may immediately revoke, modify, or suspend the use of such product or material within their jurisdiction. BCCO reserves the right to revoke this acceptance, if it is determined by BCCO that this product or material fails to meet the requirements of the applicable building code.

This product is approved as described herein, and has been designed to comply with the Florida Building Code, including the High Velocity Hurricane Zone of the Florida Building Code.

DESCRIPTION: Air Vent Shingle Vent II-11, Shingle Vent II-9, and Shingle Vent II-7

LABELING: Each unit shall bear a permanent label with the manufacturer's name or logo, city, state and following statement: "Miami-Dade County Product Control Approved", unless otherwise noted herein.

RENEWAL of this NOA shall be considered after a renewal application has been filed and there has been no change in the applicable building code negatively affecting the performance of this product.

TERMINATION of this NOA will occur after the expiration date or if there has been a revision or change in the materials, use, and/or manufacture of the product or process. Misuse of this NOA as an endorsement of any product, for sales, advertising or any other purposes shall automatically terminate this NOA. Failure to comply with any section of this NOA shall be cause for termination and removal of NOA.

ADVERTISEMENT: The NOA number preceded by the words Miami-Dade County, Florida, and followed by the expiration date may be displayed in advertising literature. If any portion of the NOA is displayed, then it shall be done in its entirety.

INSPECTION: A copy of this entire NOA shall be provided to the user by the manufacturer or its distributors and shall be available for inspection at the job site at the request of the Building Official.

This NOA renews NOA # 06-0411.10 and consists of pages 1 through 4.
The submitted documentation was reviewed by Alex Tigera.

ROOFING ASSEMBLY APPROVAL

Category:	Roofing
Sub-Category:	Roof Ventilators
Materials:	Plastic
Maximum Design Pressure	N/A.
Fire Classification:	N/A

TRADE NAMES OF PRODUCTS MANUFACTURED OR LABELED BY APPLICANT:

Product	Dimensions	Test Specification	Product Description
Air Vent Shingle Vent™ II Ridge Vent	See detail drawing herein	TAS 100	High density polypropylene low profile attic ridge vent for installation in shingle roof systems.
Air Vent Shingle Vent™ II 7 Ridge Vent	See detail drawing herein	TAS 100	High density polypropylene low profile attic ridge vent for installation in shingle roof systems
Air Vent Shingle Vent™ II 9 Ridge Vent	See detail drawing herein	TAS 100	High density polypropylene low profile attic ridge vent for installation in shingle roof systems

EVIDENCE SUBMITTED:

Test Agency/Identifier	Name	Report	Date
United States Testing Company, Inc.	ASTM D-2843-88	601269-1	07/28/94
United States Testing Company, Inc.	ASTM D-1929-91	601269-2	07/28/94
AGRA Earth and Enviromental	ASTM D-638	No.94-9905	11/07/94
Hurricane Engineering and Testing	ASTM G-155	HETI-02-A001	09/13/02
Architectural Testing, Inc.	TAS 100A(95) Wind Driven Rain	6457.01-109-18	08/08/06
Architectural Testing, Inc.	TAS 100A(95) Wind Driven Rain	65453.01-109-18	08/08/06

APPROVED APPLICATIONS:

Slot: Cut a minimum 1½" slot along the apex of the roof by cutting ¾" on each side of the ridge. The slot shall terminate approximately 6" from the rake edge.

Installation: Place ridge vent section centered over the void at one end of the ridge. Plugged end should be flush with end wall of ventilated space under roof. Pre-fasten first section using roofing nails through pre-drilled nail bosses. Continue to pre-fasten remaining sections, making sure support walls are flat on roof and filter is secure between shingles and vent. Cut final section to length.

Ridge Shingle: Nail cap shingles in place using roofing nails long enough to penetrate through the roof sheathing a minimum of $^{3}/_{16}$ of an inch. Use nail lines provided on vent.

Net Free Area: Refer to manufacturers published literature

Minimum Slope: 2:12

LIMITATIONS:

1. Refer to applicable building codes for required ventilation.
2. Vents shall not be installed on roof mean heights greater than 33 feet.
3. All products listed herein shall have a quality assurance audit in accordance with the Florida Building Code and Rule 9B-72 of the Florida Administrative Code.

DETAIL DRAWINGS

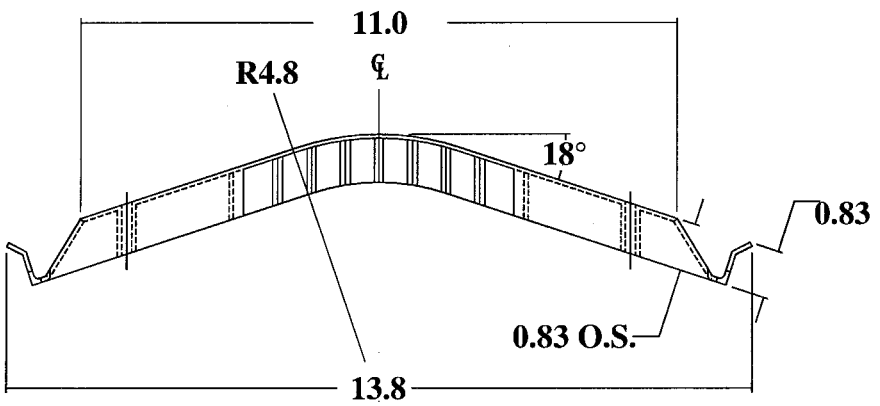

LOW PROFILE SHINGLE VENT II-11"

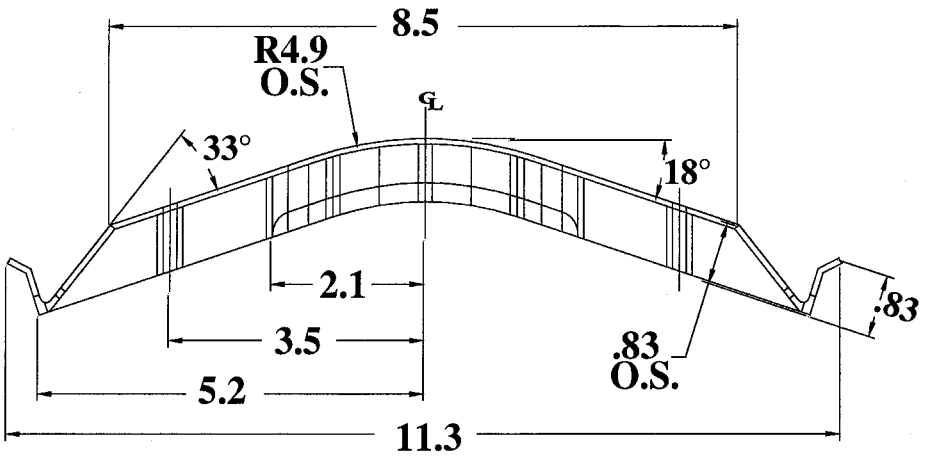

LOW PROFILE SHINGLE VENT II - 9"

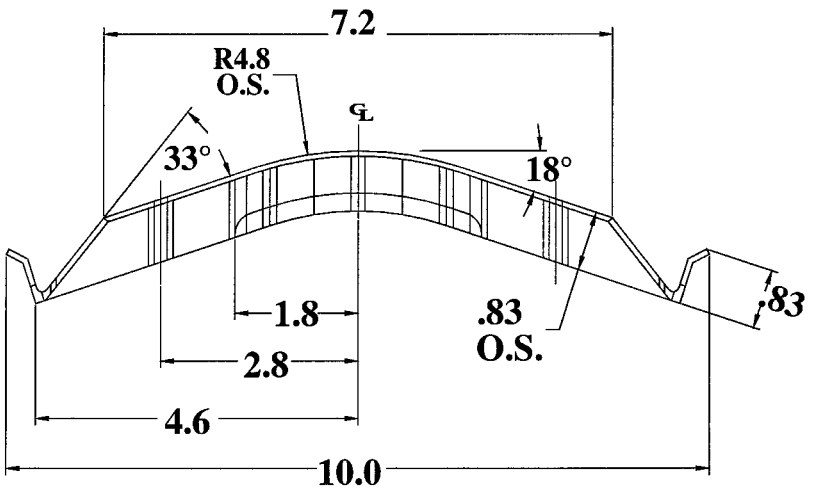

LOW PROFILE SHINGLE VENT II - 7"

END OF THIS ACCEPTANCE