MIAMI-DADE COUNTY

BUILDING CODE COMPLIANCE OFFICE (BCCO)
PRODUCT CONTROL DIVISION

MIAMI-DADE COUNTY, FLORIDA
METRO-DADE FLAGLER BUILDING
140 WEST FLAGLER STREET, SUITE 1603
MIAMI, FLORIDA 33130-1563
(305) 375-2901 FAX (305) 375-2908
www.buildingcodeonline.com

NOTICE OF ACCEPTANCE (NOA)

Delta Doors Manufacturing Co.
7500 NW 69th Ave
Miami, FL 33166

SCOPE:

This NOA is being issued under the applicable rules and regulations governing the use of construction materials. The documentation submitted has been reviewed by Miami-Dade County Product Control Division and accepted by the Board of Rules and Appeals (BORA) to be used in Miami Dade County and other areas where allowed by the Authority Having Jurisdiction (AHJ).

This NOA shall not be valid after the expiration date stated below. The Miami-Dade County Product Control Division (In Miami Dade County) and/or the AHJ (in areas other than Miami Dade County) reserve the right to have this product or material tested for quality assurance purposes. If this product or material fails to perform in the accepted manner, the manufacturer will incur the expense of such testing and the AHJ may immediately revoke, modify, or suspend the use of such product or material within their jurisdiction. BORA reserves the right to revoke this acceptance, if it is determined by Miami-Dade County Product Control Division that this product or material fails to meet the requirements of the applicable building code.

This product is approved as described herein, and has been designed to comply with the Florida Building Code, including High Velocity Hurricane Zone of the Florida Building Code.

DESCRIPTION: Series "DH-350" Aluminum Inswing Entrance Door-Impact

APPROVAL DOCUMENT: Drawing N0. **W06-81,** titled "Series-DH-350 Alum Inswing Entrance Door", sheets 1 through 8 of 8, prepared by Al Farooq Corp. , dated 11-22-06 and last revised on June 09, 2008, signed and sealed by Dr. Humayoun Farooq, P.E., bearing the Miami-Dade County Product Control revision stamp with the Notice of Acceptance number and expiration date by the Miami-Dade County Product Control Division.

MISSILE IMPACT RATING: Large Missile Impact Resistant

Limitation:

1. This door can be installed in Delta Door storefront or Miami-Dade approved storefront system having current NOA, to be reviewed by AHJ. Lower design pressure shall control.
2. The Doors are not rated for water infiltration resistant.
3. The frame jamb item #3 (5"x1"x3.5" is rated to max. DP=70 psf only.

LABELING: Each unit shall bear a permanent label with the manufacturer's name or logo, city, state and following statement: "Miami-Dade County Product Control Approved", unless otherwise noted herein.

RENEWAL of this NOA shall be considered after a renewal application has been filed and there has been no change in the applicable building code negatively affecting the performance of this product.

TERMINATION of this NOA will occur after the expiration date or if there has been a revision or change in the materials, use, and/or manufacture of the product or process. Misuse of this NOA as an endorsement of any product, for sales, advertising or any other purposes shall automatically terminate this NOA. Failure to comply with any section of this NOA shall be cause for termination and removal of NOA.

ADVERTISEMENT: The NOA number preceded by the words Miami-Dade County, Florida, and followed by the expiration date may be displayed in advertising literature. If any portion of the NOA is displayed, then it shall be done in its entirety.

INSPECTION: A copy of this entire NOA shall be provided to the user by the manufacturer or its distributors and shall be available for inspection at the job site at the request of the Building Official.

This NOA **revises** NOA # **07-0220.07** consists of this page 1 and evidence sheet E-1 as well as approval document mentioned above.

The submitted documentation was reviewed by **Ishaq I. Chanda, P.E.**

MIAMI-DADE COUNTY APPROVED

NOA No 08-0618.06
Expiration Date: April 26, 2012
Approval Date: August 14, 2008

7/21/18

NOTICE OF ACCEPTANCE: EVIDENCE SUBMITTED

A. DRAWINGS (transferred from file # 07-0220.07)

1. Manufacturer's die drawings and sections.
2. Drawing N0. **W06-81,** titled "Series-DH-350 Alum Inswing Entrance Door", sheets 1 through 8 of 8, prepared by Al Farooq Corp., dated 11-22-06 and last revised on June 09, 2008, signed and sealed by Dr. Humayoun Farooq

B. TESTS (transferred from file # 07-0220.07)

1. Test reports on
   1) Air Infiltration Test, per FBC, TAS 202-94
   2) Water Infiltration resistant Test (Not Performed)
   3) Uniform Static Air Pressure Test, Loading per FBC TAS 202-94
   4) Large Missile Impact Test per FBC, TAS 201-94
   5) Cyclic Wind Pressure Loading per FBC, TAS 203-94
   6) Forced Entry Test, Per FBC 2411 3.2.1 and TAS 202-94

along with marked-up drawings and installation diagram of aluminum Inswing entrance door, prepared by Fenestration Testing Laboratory, Inc., Test Reports No. **FTL-5047,** dated 11/09/06 signed and sealed by Edmundo Largaespada, P. E.

2. Additional test reports (original in file # 07-0220.07)
   1) Air Infiltration Test, per FBC, TAS 202-94
   2) Uniform Static Air Pressure Test, Loading per FBC TAS 202-94
   3) Large Missile Impact Test per FBC, TAS 201-94
   4) Cyclic Wind Pressure Loading per FBC, TAS 203-94
   5) Forced Entry Test, Per FBC 2411 3.2.1 and TAS 202-94

Along with marked-up drawings and installation diagram of a aluminum outswing entrance door w/ transom and outswing doors w/ sidelites & transom , prepared by Fenestration Testing Laboratory, Inc., Test Report No(s) **FTL-4254**, dated 06/28/04, **FTL-4306,** dated 08/31/04 and **FTL-4320**, dated 09/15/04, all signed and sealed by Edmundo Largaespada, P.E.

C. CALCULATIONS

1. Anchor verification, comparative and structural analysis, prepared by AL- Farooq Corporation, dated 06/09/08, signed and sealed by Dr. Humayoun Farooq, P.E.
2. Glazing complies w/ ASTME-1300-02

D. QUALITY ASSURANCE

1. Miami Dade /Building Code Compliance Office (BCCO).

E. MATERIAL CERTIFICATIONS

1. Notice of Acceptance No. **06-1205.10** issued to DuPont DeNemours for "Sentry Glass Plus", expiring on 12/11/08.

F. STATEMENTS

1. Statement letter of code compliance and "No financial interest", dated 06-06-08 signed and sealed by Dr. Humayoun Farooq, P.E.
2. Statement letter of Lab compliance, as a part of above referenced test reports

G. OTHER

1. This **revises** NOA # **07-0220.07** expires on April 26, 2012.
2. Test proposals # 02-0472 dated 07-05-02 & #06-0182 dated 6/7/6 issued by BCCO.
3. NOA # 04-1123:04 for Series DH-350 Outswing Alum Entrance Door.

Ishaq I. Chanda

Ishaq I. Chanda, P. E.
Product Control Examiner
NOA No 08-0618.06
Expiration Date: April 26, 2012
Approval Date: August 14, 2008

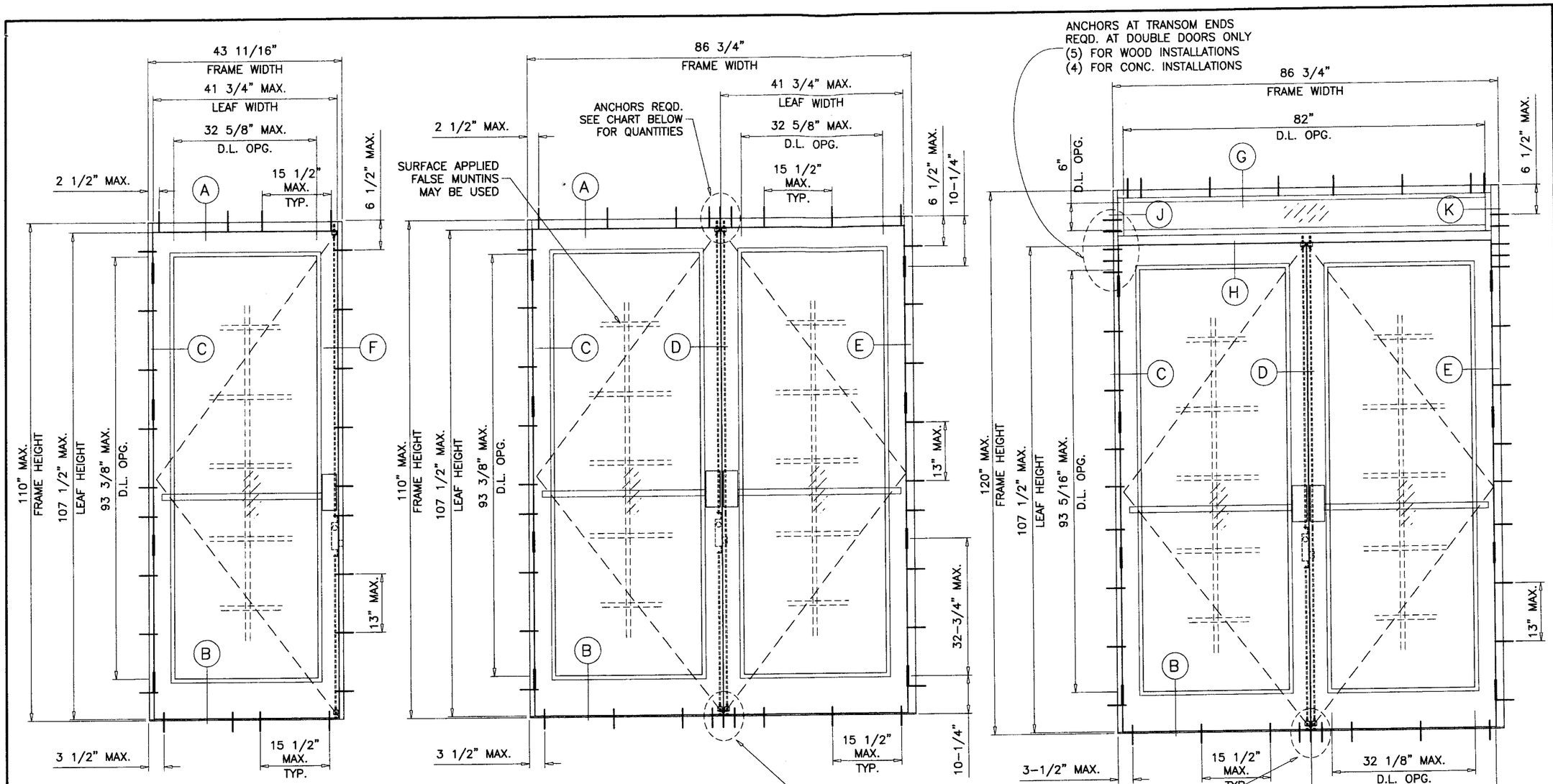

TYPICAL ELEVATIONS

SUBSTRATE	TOTAL NO. OF ANCHORS AT MTG. STILE ENDS	
	UPTO 75 PSF	UPTO 100 PSF
WOOD	4	5
CONCRETE	3	4
METAL	3	4

DH-350 ALUM IN-SWING ENTRANCE DOOR

SEE CHARTS ON SHEET 2 FOR DESIGN LOAD CAPACITY OF SINGLE (X) AND DOUBLE (XX) DOORS W/O TRANSOM.

SEE CHARTS ON SHEET 3 FOR DESIGN LOAD CAPACITY OF SINGLE (O/X) AND DOUBLE (O/XX) DOORS WITH TRANSOM.

DOORS CAN ALSO BE USED WITH DHS-500 STOREFRONT SYSTEM. FOR DOORS WITH STOREFRONT SYSTEM SEE SEPARATE NOA FOR DOOR MULLION CAPACITY.

THE LOWEST VALUE RESULTING FROM DOOR CAPACITY CHARTS OR STOREFRONT NOA WILL APPLY TO ENTIRE SYSTEM.

DOORS NOT APPROVED FOR INSTALLATIONS WHERE WATER INFILTRATION RESISTANCE IS REQUIRED.

THIS PRODUCT HAS BEEN DESIGNED AND TESTED TO COMPLY WITH THE REQUIREMENTS OF THE FLORIDA BUILDING CODE 2004/2007 EDITION INCLUDING HIGH VELOCITY HURRICANE ZONE (HVHZ).

WOOD BUCKS BY OTHERS, MUST BE ANCHORED PROPERLY TO TRANSFER LOADS TO THE STRUCTURE.

ANCHORS SHALL BE AS LISTED, SPACED AS SHOWN ON DETAILS, ANCHORS EMBEDMENT TO BASE MATERIAL SHALL BE BEYOND WALL DRESSING OR STUCCO.

ANCHORING OR LOADING CONDITIONS NOT SHOWN IN THESE DETAILS ARE NOT PART OF THIS APPROVAL.

A LOAD DURATION INCREASE IN ALLOWABLE STRESS IS USED IN DESIGN OF ANCHORS INTO WOOD ONLY.

MATERIALS INCLUDING BUT NOT LIMITED TO STEEL/METAL SCREWS, THAT COME INTO CONTACT WITH OTHER DISSIMILAR MATERIALS SHALL MEET THE REQUIREMENTS OF 2004/2007 FLORIDA BLDG. CODE SECTION 2003.8.4.

THESE DOORS ARE RATED FOR LARGE MISSILE IMPACT. SHUTTERS ARE NOT REQUIRED.

Engr: DR. HUMAYOUN FAROOQ
STRUCTURES
FLA. PE # 16557
C.A.N. 3538

JUN 0 9 2008

PRODUCT REVISED
as complying with the Florida Building Code
Acceptance No. 08-0618.06
Expiration Date APR 26, 2012
By Miami Dade Product Control Division

AL-FAROOQ CORPORATION
ENGINEERS & PRODUCT DEVELOPMENT
1235 S.W. 87 AVE
MIAMI, FLORIDA 33174
TEL. (305) 264-8100 FAX. (305) 262-6978
COMP-ANL\W06-81DD

DH-350 ALUM IN-SWING ENTRANCE DOOR (L.M.I.)

DELTA DOORS
7500 N.W. 69TH AVE.
MIAMI, FL 33166
TEL. (305) 888-0077 FAX. (305) 884-3111

revisions:

no	date	by	description
A	06.06.08		UPDATED FOR 2007 FBC

date: 11-22-06
scale: 1/2"=1'-0"
dr. by: HAMID
chk. by:

drawing no. W06-81

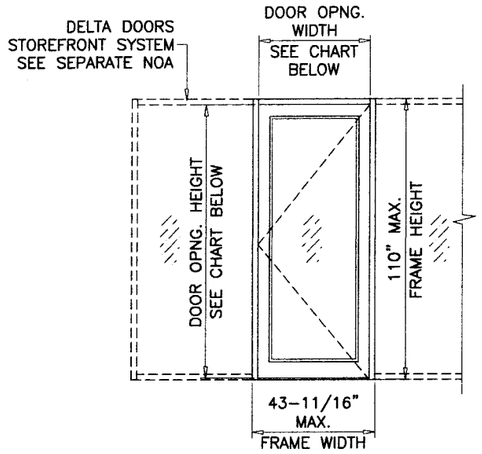

(X)

NOTE:
GLASS CAPACITIES ON THIS SHEET ARE BASED ON ASTM E1300-02/04 (3 SEC. GUSTS) AND FLORIDA BUILDING COMMISSION DECLARATORY STATEMENT DCA05-DEC-219

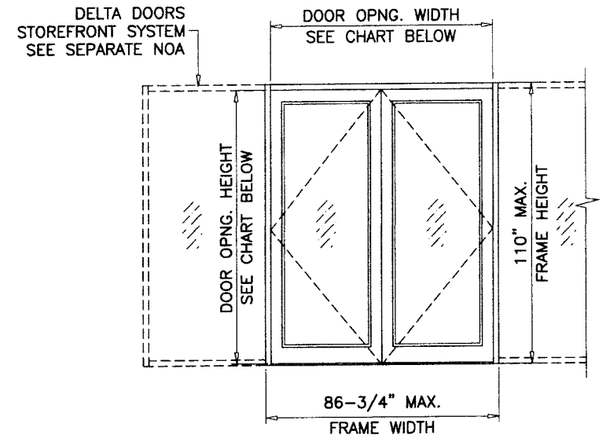

(XX)

SINGLE ENTRANCE DOORS W/O TRANSOM			
DESIGN LOAD CAPACITY - PSF			
NOMINAL DIMS.		LOCK STILE UN-REINFORCED	LOCK STILE REINFORCED
OPNG. WIDTH INCHES	DOOR HEIGHT INCHES	EXT. (+) INT. (-)	EXT. (+) INT. (-)
32 TO 42	80 TO 108	75.0	100.0

DOUBLE ENTRANCE DOORS W/O TRANSOM			
DESIGN LOAD CAPACITY - PSF			
NOMINAL DIMS.		LOCK STILE UN-REINFORCED	LOCK STILE REINFORCED
OPNG. WIDTH INCHES	DOOR HEIGHT INCHES	EXT. (+) INT. (-)	EXT. (+) INT. (-)
64 TO 84	80 TO 108	75.0	100.0

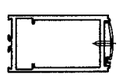

LOCK STILE
UN-REINFORCED

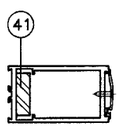

LOCK STILE
REINFORCED

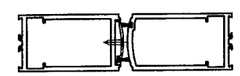

LOCK STILES
UN-REINFORCED

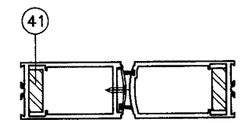

LOCK STILES
REINFORCED

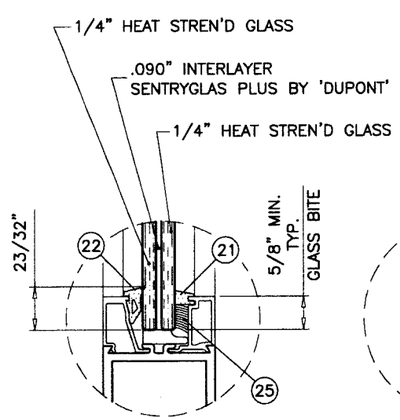

GLAZING DETAIL
DOOR LEAF

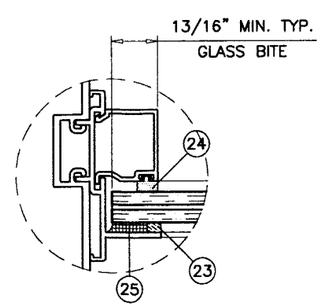

GLAZING DETAIL
FIXED LITE

PRODUCT REVISED
as complying with the Florida Building Code
Acceptance No 06-0618.06
Expiration Date APR 26, 2012
By Ishaq I. Chanda
Miami Dade Product Control Division

Engr: DR. HUMAYOUN FAROOQ
STRUCTURES
FLA. PE # 16557
C.A.N. 3538

JUN 09 2008

AL-FAROOQ CORPORATION
ENGINEERS & PRODUCT DEVELOPMENT
1235 S.W. 87 AVE
MIAMI, FLORIDA 33174
TEL. (305) 264-8100 FAX. (305) 262-6978
COMP-ANL\W06-81DD

DH-350 ALUM IN-SWING ENTRANCE DOOR (L.M.I.)

DELTA DOORS
7500 N.W. 69TH AVE.
MIAMI, FL 33166
TEL. (305) 888-0077 FAX. (305) 884-3111

revisions:			
no	date	by	description
A	06.06.08		UPDATED FOR 2007 FBC

date: 11-22-06
scale: 3/8" = 1"
dr. by: HAMID
chk. by:

drawing no.
W06-81

sheet 2 of 8

SINGLE ENTRANCE DOORS WITH TRANSOM				
DESIGN LOAD CAPACITY – PSF				
NOMINAL DIMS.			LOCK STILE UN-REINFORCED	LOCK STILE REINFORCED
OPNG. WIDTH INCHES	DOOR HEIGHT INCHES	TRANSOM HEIGHT INCHES	EXT. (+) INT. (–)	EXT. (+) INT. (–)
32 TO 42	80 TO 108	6 TO 40	75.0	100.0

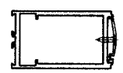

LOCK STILE
UN-REINFORCED

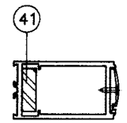

LOCK STILE
REINFORCED

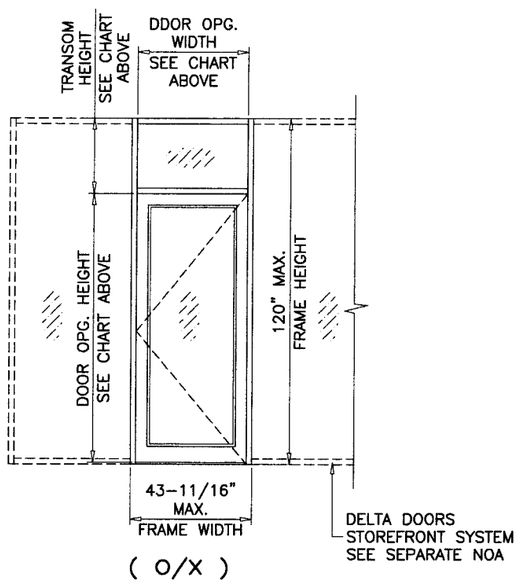

(O/X)

DOUBLE ENTRANCE DOORS WITH TRANSOM				
DESIGN LOAD CAPACITY – PSF				
NOMINAL DIMS.			LOCK STILE UN-REINFORCED	LOCK STILE REINFORCED
OPNG. WIDTH INCHES	DOOR HEIGHT INCHES	TRANSOM HEIGHT INCHES	EXT. (+) INT. (–)	EXT. (+) INT. (–)
72	80	12	75.0	100.0
		18	75.0	100.0
		24	75.0	100.0
		30	75.0	100.0
		36	75.0	100.0
		40	75.0	98.2
78		12	75.0	100.0
		18	75.0	100.0
		24	75.0	98.3
		30	75.0	92.0
		36	75.0	86.3
		40	75.0	82.8
84		12	75.0	97.5
		18	75.0	90.5
		24	75.0	84.2
		30	75.0	78.6
		36	73.6	73.6
		40	70.6	70.6
72	84	12	75.0	100.0
		18	75.0	100.0
		24	75.0	100.0
		30	75.0	100.0
		36	75.0	98.8
78		12	75.0	100.0
		18	75.0	100.0
		24	75.0	94.7
		30	75.0	88.7
		36	75.0	83.4
84		12	75.0	93.5
		18	75.0	86.9
		24	75.0	81.1
		30	75.0	75.9
		36	71.2	71.2
72	90	12	75.0	100.0
		18	75.0	100.0
		24	75.0	100.0
		30	75.0	99.7
78		12	75.0	100.0
		18	75.0	95.7
		24	75.0	89.7
		30	75.0	84.3
84		12	75.0	88.0
		18	75.0	82.1
		24	75.0	76.8
		30	72.1	72.1

DOUBLE ENTRANCE DOORS WITH TRANSOM				
DESIGN LOAD CAPACITY – PSF				
NOMINAL DIMS.			LOCK STILE UN-REINFORCED	LOCK STILE REINFORCED
OPNG. WIDTH INCHES	DOOR HEIGHT INCHES	TRANSOM HEIGHT INCHES	EXT. (+) INT. (–)	EXT. (+) INT. (–)
72	96	12	75.0	100.0
		18	75.0	100.0
		24	75.0	100.0
78		12	75.0	96.7
		18	75.0	90.6
		24	75.0	85.2
84		12	75.0	83.1
		18	75.0	77.8
		24	73.0	73.0
72	102	12	75.0	100.0
		18	75.0	100.0
78		12	75.0	91.6
		18	75.0	86.1
84		12	75.0	78.7
		18	73.9	73.9
72	108	12	75.0	100.0
78		12	75.0	87.0
84		12	74.8	74.8

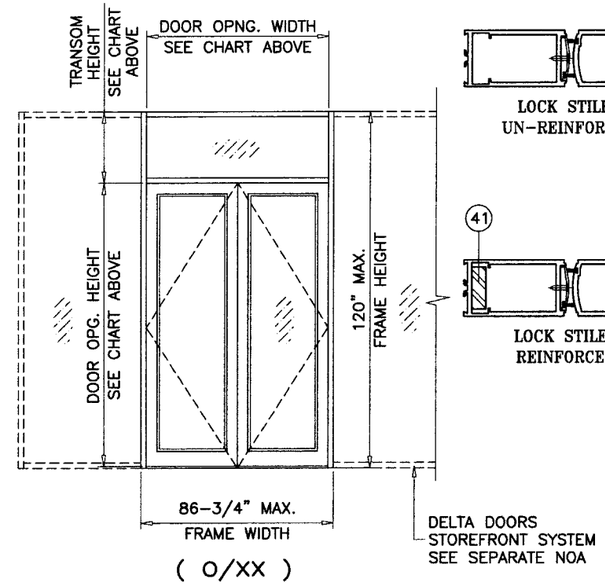

(O/XX)

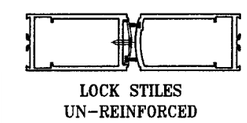

LOCK STILES
UN-REINFORCED

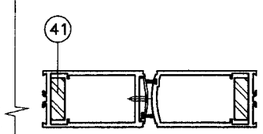

LOCK STILES
REINFORCED

NOTE:
GLASS CAPACITIES ON THIS SHEET ARE
BASED ON ASTM E1300-02/04 (3 SEC. GUSTS)
AND FLORIDA BUILDING COMMISSION
DECLARATORY STATEMENT DCA05-DEC-219

Engr: DR. HUMAYOUN FAROOQ
STRUCTURES
FLA. PE # 16557
C.A.N. 3538

JUN 0 9 2008

PRODUCT REVISED
as complying with the Florida Building Code
Acceptance No 08-0618-06
Expiration Date APR 26, 2012
By Miami Dade Product Control Division

AL-FAROOQ CORPORATION
ENGINEERS & PRODUCT DEVELOPMENT
1235 S.W. 87 AVE
MIAMI, FLORIDA 33174
TEL. (305) 264-8100 FAX. (305) 262-6978

COMP-ANL\W06-81DD

DH-350 ALUM IN-SWING ENTRANCE DOOR (L.M.I.)

DELTA DOORS
7500 N.W. 69TH AVE.
MIAMI, FL 33166
TEL. (305) 888-0077 FAX. (305) 884-3111

revisions:

no	date	by	description
A	06.06.08		UPDATED FOR 2007 FBC

date: 11-22-06
scale: –
dr. by: HAMID
chk. by:

drawing no.
W06-81

sheet 3 of 8

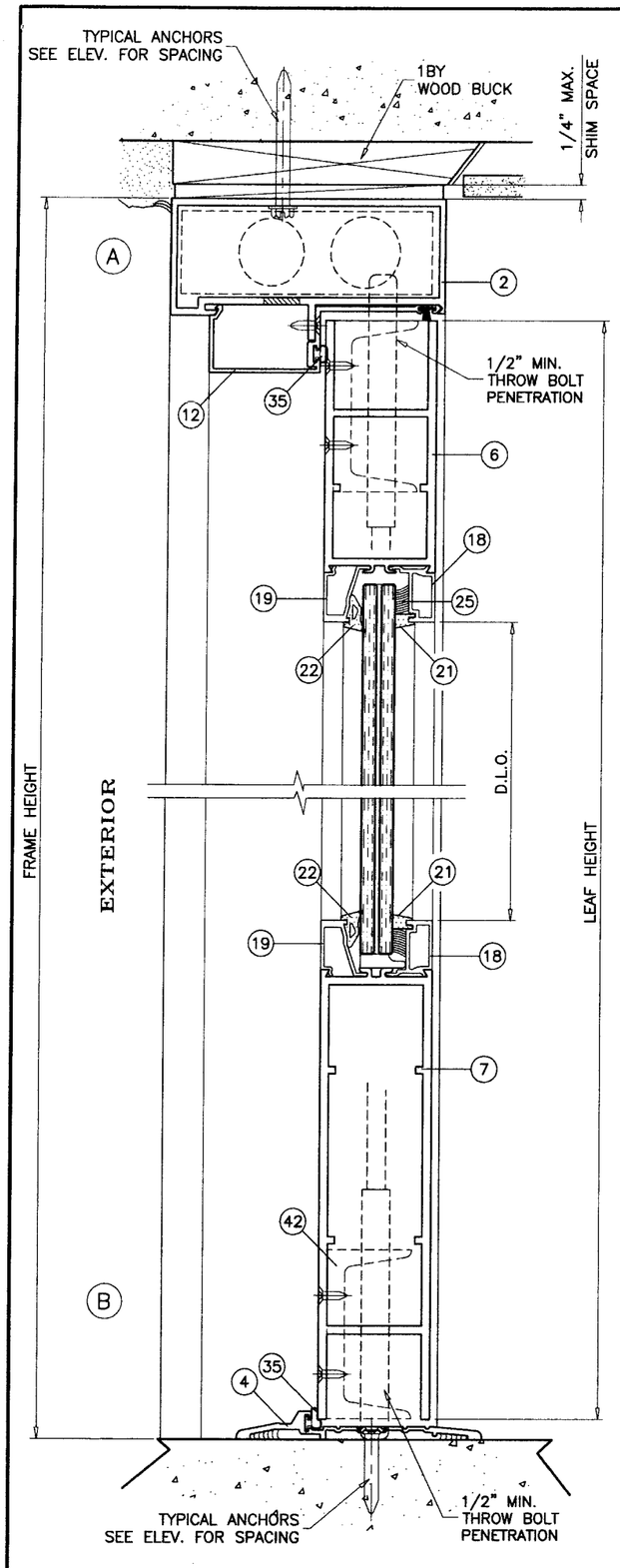

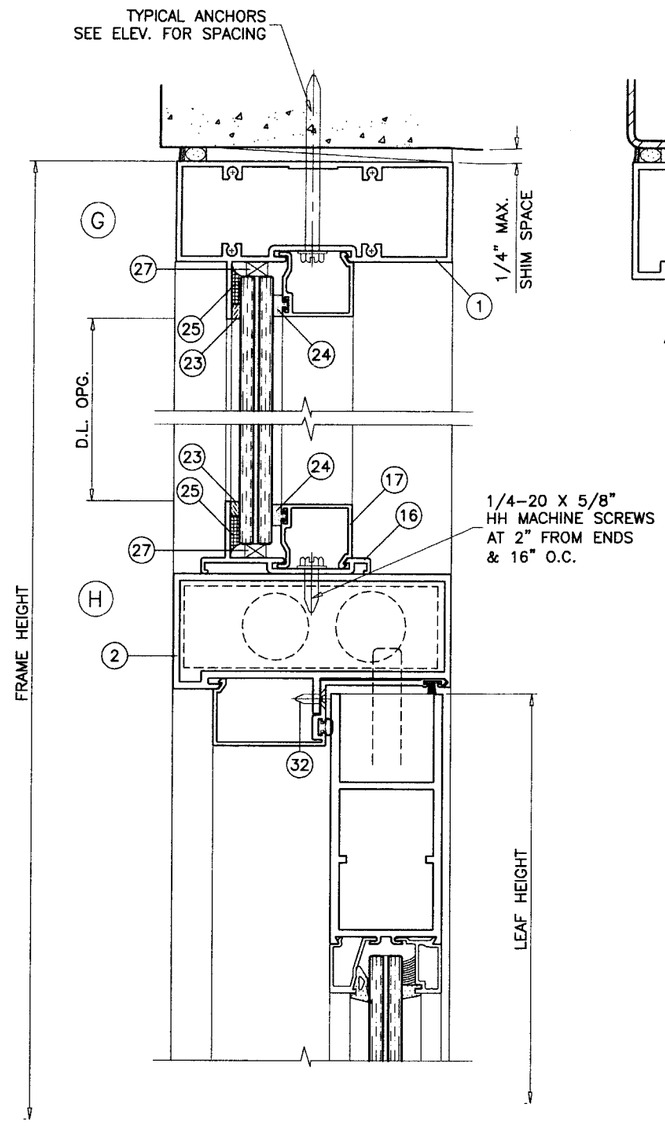

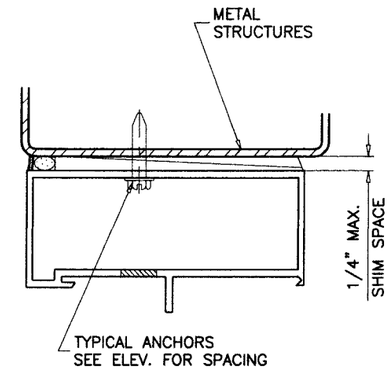

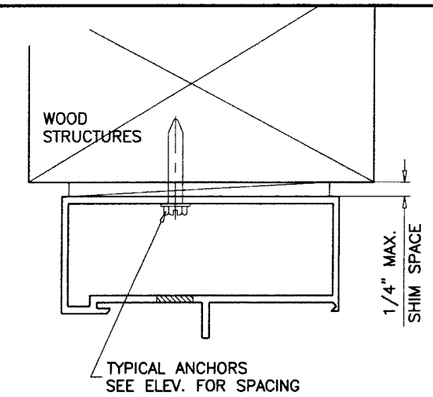

NOTE:

DOOR AND TRANSOM HEAD DETAILS CAN BE INTERCHANGED FOR VARIOUS SUBSTRATES.

WOOD BUCKS AND METAL STRUCTURES NOT BY DELTA DOORS MUST SUPPORT LOADS IMPOSED BY GLAZING SYSTEM AND TRANSFER THEM TO THE BUILDING STRUCTURE.

TYPICAL ANCHORS: SEE ELEV. FOR SPACING

1/4" DIA. ULTRACON BY 'ELCO' (Fu=177 KSI, Fy=155 KSI)

INTO 2BY WOOD BUCKS OR WOOD STRUCTURES
1-1/2" MIN. PENETRATION INTO WOOD

THRU 1BY BUCKS INTO CONC. OR MASONRY
1-1/4" MIN. EMBED INTO CONC. OR MASONRY

DIRECTLY INTO CONC. OR MASONRY
1-3/8" MIN. EMBED INTO CONC. OR MASONRY

#14 SMS OR SELF DRILLING SCREWS (GRADE 2 CRS)
INTO METAL STRUCTURES

STEEL : 12 GA. MIN. (Fy = 36 KSI MIN.)
ALUMINUM : 1/8" THK. MIN. (6063-T5 MIN.)
(STEEL IN CONTACT WITH ALUMINUM TO BE PLATED OR PAINTED)

TYPICAL EDGE DISTANCE

INTO CONCRETE AND MASONRY = 2-1/2" MIN.
INTO WOOD STRUCTURE = 1" MIN.
INTO METAL STRUCTURE = 3/4" MIN.

CONCRETE f'c = 3000 PSI MIN.
MASONRY f'm = 1500 PSI MIN.

SEALANTS:

FRAME CORNERS, ASSEMBLY SCREWS AND HEADS OF ANCHOR SCREWS AT SILL TO BE SEALED WITH SEALER.
LEAF JOINTS SEALED WITH SILICONE.

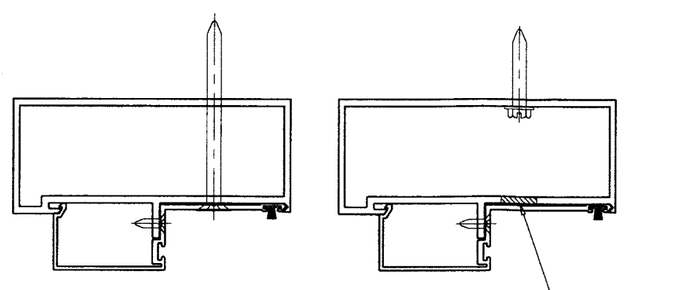

ALTERNATE LOCATION
FOR TYPICAL ANCHORS

Engr: DR. HUMAYOUN FAROOQ
STRUCTURES
FLA. PE # 16557
C.A.N. 3538

JUN 0 9 2008

PRODUCT REVISED
as complying with the Florida Building Code
Acceptance No 08-0618.06
Expiration Date APR 26, 2012
By Ishaq I. Chanda
Miami Dade Product Control Division

AL-FAROOQ CORPORATION
ENGINEERS & PRODUCT DEVELOPMENT
1235 S.W. 87 AVE
MIAMI, FLORIDA 33174
TEL. (305) 264-8100 FAX. (305) 262-6978

COMP-ANL\W06-81DD

DH-350 ALUM IN-SWING ENTRANCE DOOR (L.M.I.)

DELTA DOORS
7500 N.W. 69TH AVE.
MIAMI, FL 33166
TEL. (305) 888-0077 FAX. (305) 884-3111

revisions:

no	date	by	description
A	06.06.08		UPDATED FOR 2007 FBC

date: 11-22-06
scale: 3/8" = 1"
dr. by: HAMID
chk. by:

drawing no.
W06-81

sheet 4 of 8

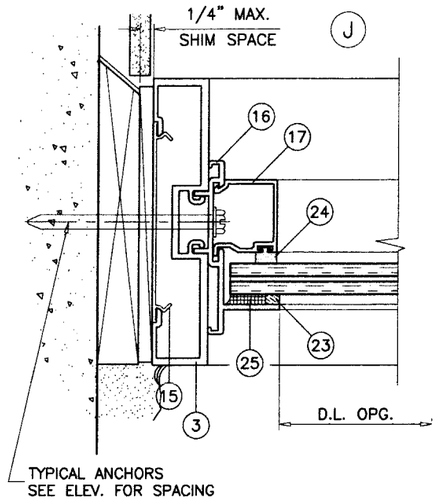

NOTE:

DOOR AND TRANSOM JAMB DETAILS CAN BE INTERCHANGED FOR VARIOUS SUBSTRATES.

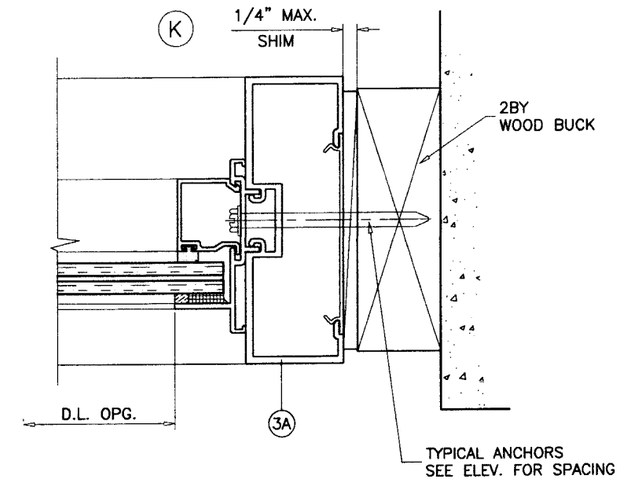

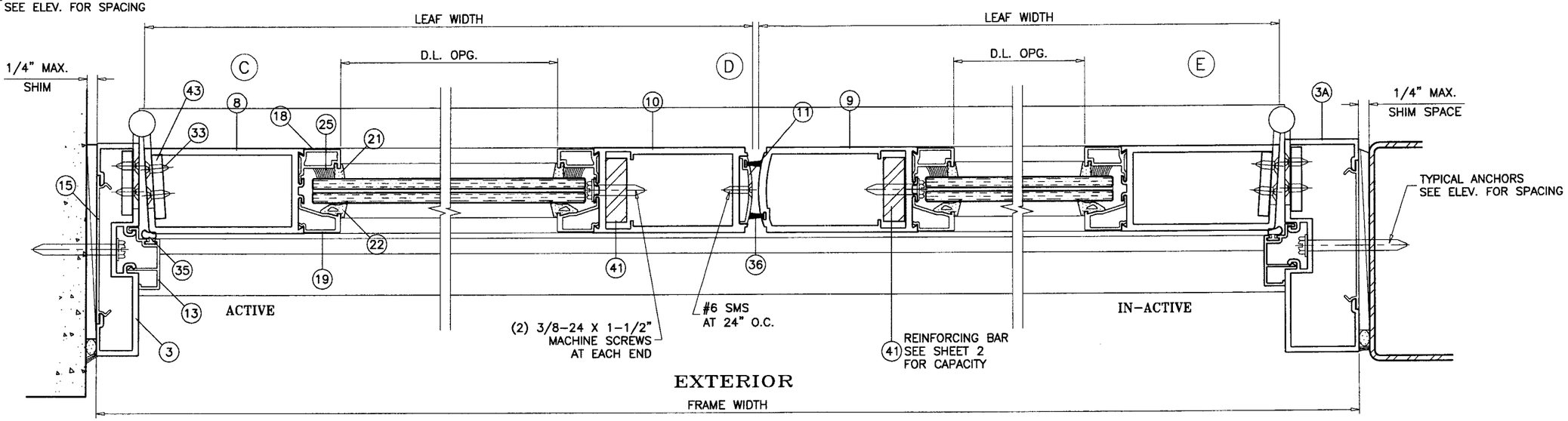

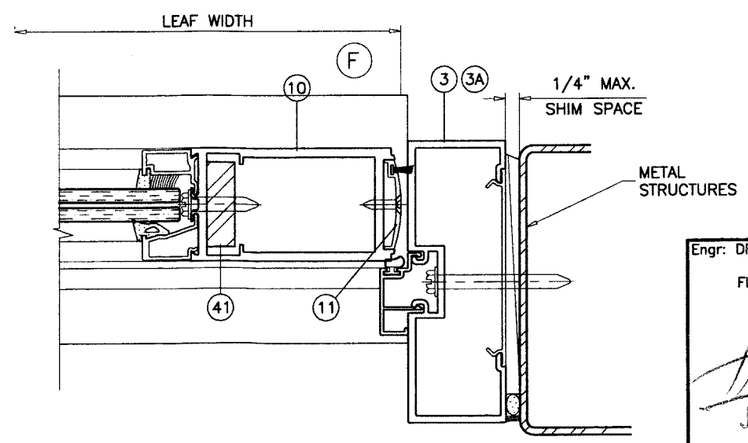

Engr: DR. HUMAYOUN FAROOQ
STRUCTURES
FLA. PE # 16557
C.A.N. 3538

JUN 0 9 2008

PRODUCT REVISED
as complying with the Florida
Buiding Code
Acceptance No 08-0618.06
Expiration Date APR 26, 2012
By Ishaq I. Khan
Miami Dade Product Control
Division

AL-FAROOQ CORPORATION
ENGINEERS & PRODUCT DEVELOPMENT
1235 S.W. 87 AVE
MIAMI, FLORIDA 33174
TEL. (305) 264-8100 FAX. (305) 262-6978
COMP-ANL\W06-81DD

DH-350 ALUM IN-SWING ENTRANCE DOOR (L.M.I.)

DELTA DOORS
7500 N.W. 69TH AVE.
MIAMI, FL 33166
TEL. (305) 888-0077 FAX. (305) 884-3111

revisions:

no	date	by	description
A	06.06.08		UPDATED FOR 2007 FBC

date: 11-22-06
scale: 3/8" = 1"
dr. by: HAMID
chk. by:

drawing no.
W06-81

sheet 5 of 8

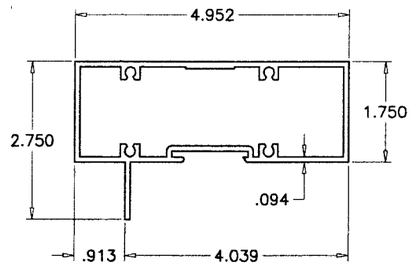

1 FRAME HEAD

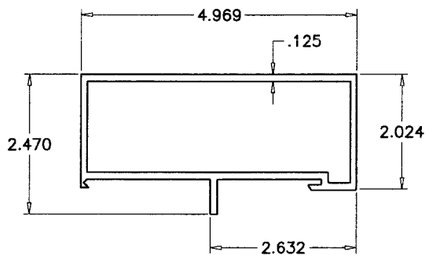

2 DOOR FRAME HEAD

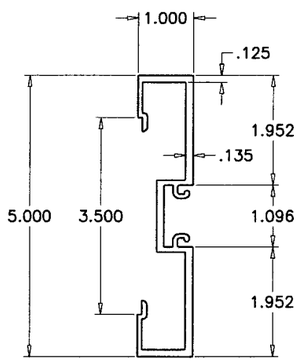

3 FRAME JAMB

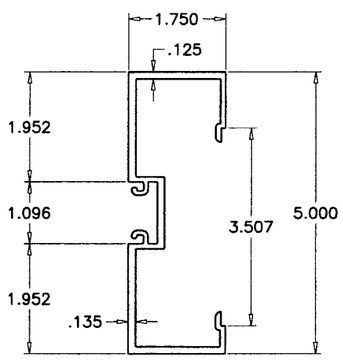

3A ALT. FRAME JAMB

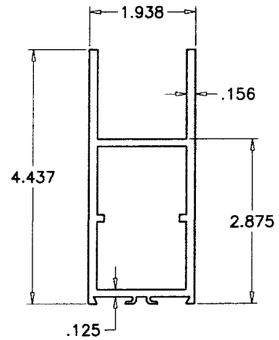

6 TOP RAIL

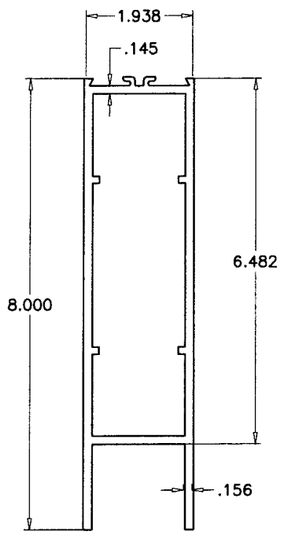

7 BOTTOM RAIL

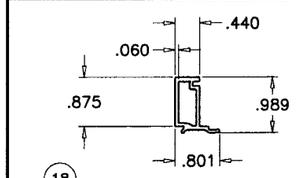

18 EXTERIOR GLASS STOP (DOOR)

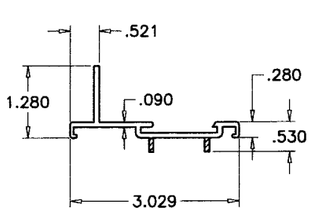

16 GLAZING ADAPTER

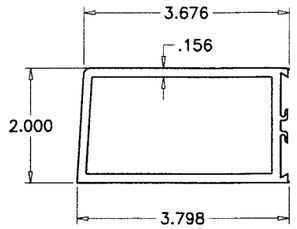

8 HINGE STILE

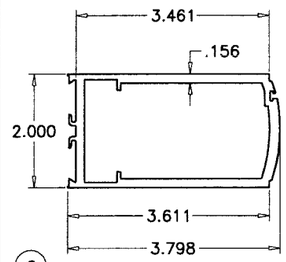

9 LOCK STILE (IN-ACTIVE)

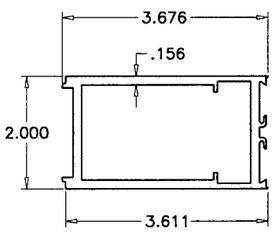

10 LOCK STILE (ACTIVE)

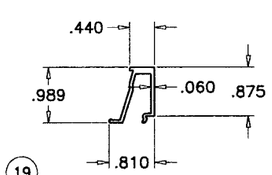

19 INTERIOR GLASS STOP (DOOR)

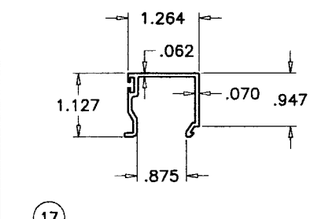

17 INTERIOR GLASS STOP (TRANSOM)

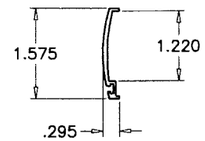

11 LOCK STILE CAP

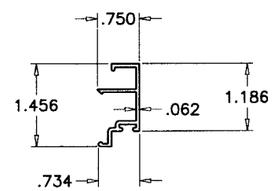

13 DOOR STOP (JAMB)

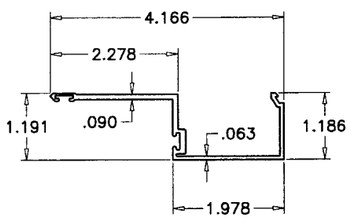

12 DOOR STOP (HEAD)

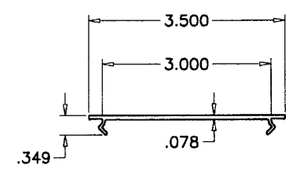

15 FLAT FILLER

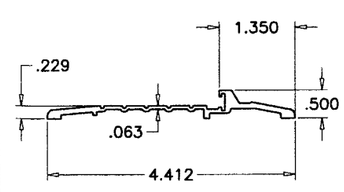

4 BUMPER THRESHOLD

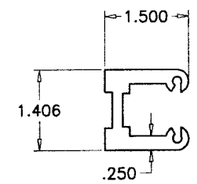

39 SHEAR BLOCK

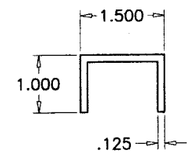

38 SHEAR CLIP

PRODUCT REVISED
as complying with the Florida
Building Code
Acceptance No 06-0618.06
Expiration Date APR 24, 2012
By [illegible]
Building Code/Product Control
Division

Engr: DR. HUMAYOUN FAROOQ
STRUCTURES
FLA. PE # 16557
C.A.N. 3538

JUN 0 9 2008

AL-FAROOQ CORPORATION
ENGINEERS & PRODUCT DEVELOPMENT
1235 S.W. 87 AVE
MIAMI, FLORIDA 33174
TEL. (305) 264-8100 FAX. (305) 262-6978

COMP-ANL\W06-81DD

DH-350 ALUM IN-SWING ENTRANCE DOOR (L.M.I.)

DELTA DOORS
7500 N.W. 69TH AVE.
MIAMI, FL 33166
TEL. (305) 888-0077 FAX. (305) 884-3111

revisions:

no	date	by	description
A	06.06.08		UPDATED FOR 2007 FBC

date: 11-22-06
scale: 3/8" = 1"
dr. by: HAMID
chk. by:

drawing no.
W06-81

sheet 6 of 8

LOCK SINGLE DOORS:

3 POINT LOCK SYSTEM WITH 5 PLY MORTISE HOOK LOCK AND 1/2" DIA. BOLT BY REGENT.
KEY OPERATED ON EXTERIOR AND THUMB TURN OPERATOR ON INTERIOR.
LOCK AT 42" FROM BOTTOM.
THROW BOLTS AT TOP & BOTTOM.

LOCK DOUBLE DOORS:

ACTIVE LEAF:

3 POINT LOCK SYSTEM WITH 5 PLY MORTISE HOOK LOCK AND 1/2" DIA. BOLT BY REGENT.
KEY OPERATED ON EXTERIOR AND THUMB TURN OPERATOR ON INTERIOR.
LOCK AT 42" FROM BOTTOM.
THROW BOLTS AT TOP & BOTTOM.

INACTIVE LEAF

2 POINT LOCK SYSTEM WITH 1/2" DIA. BOLT BY REGENT.
THUMB TURN OPERATOR ON INTERIOR AT 42" FROM BOTTOM.
THROW BOLTS AT TOP & BOTTOM.

HINGES:

4-1/2 X 4" TWO PIECE STEEL BUTT HINGES AT 8" FROM TOP AND BOTTOM AND 31" O.C. MAX.

ITEM #	PART #	REQD.	DESCRIPTION	MATERIAL	MANF./SUPPLIER/REMARKS
1	DLD-103	AS REQD.	FRAME HEAD	6063-T5	-
2	DLD-105	1	DOOR FRAME HEAD	6063-T6	-
3	DLD-119	2/DOOR	FRAME JAMB	6063-T6	-
3A	DLD-124	2/DOOR	ALT. FRAME JAMB	6063-T6	-
4	DLD-111	1	FRAME SILL	6063-T5	-
6	DLD-107	1/ LEAF	TOP RAIL	6063-T5	-
7	DLD-110	1/ LEAF	BOTTOM RAIL	6063-T5	-
8	DLD-114	1/ LEAF	HINGE STILE	6063-T5	-
9	DLD-115	1/ LEAF	LOCK STILE (IN-ACTIVE)	6063-T5	-
10	DLD-116	1/ LEAF	LOCK STILE (ACTIVE)	6063-T5	-
11	DLD-117	1	CAP AT LOCKED STILE	6063-T5	-
12	DLD-106	1	DOOR STOP AT HEAD	6063-T5	-
13	BCE-460	2/ DOOR	DOOR STOP AT JAMB	6063-T5	-
15	BCE-475	AS REQD.	FLAT FILLER	6063-T5	-
16	DLD-125	AS REQD.	GLAZING ADAPTOR	-	-
17	DLD-102	AS REQD.	INTERIOR GLASS STOP TRANSOM	6063-T5	-
18	DLD-108	4/ LEAF	EXTERIOR GLASS STOP DOOR	6063-T5	-
19	DLD-109	4/ LEAF	INTERIOR GLASS STOP DOOR	6063-T5	-
21	-	AS REQD.	GASKET	-	TR-5399S 70 DUROMETER SILICONE
22	-	AS REQD.	GASKET	-	TR-3235E 70 DUROMETER EPDM
23	2100	AS REQD.	GLAZING TAPE	-	-
24	GG-75	AS REQD.	INTERIOR SPACER	-	IMPACT SYS.
25	DOW 995	AS REQD.	GLAZING COMPOUND	SILICONE	DOW 995
27	1350	AS REQD.	SETTING BLOCK	-	-
29	#12 X 1-1/4"	AS REQD.	FRAME ASSEMBLY SCREWS	-	P.H. SMS
30	1/4-24 X 3/4"	AS REQD.	FRAME ASSEMBLY SCREWS	-	F.H. SMS
31	#12 X 3/4"	AS REQD.	FRAME ASSEMBLY SCREWS	-	H.H. MACHINE SCREWS
32	10-24 X 1/2"	4/ LEAF	DOOR STOP SCREWS	-	F.H. MACHINE SCREWS
33	12-24 X 1/2"	4/ HASP	HINGE INSTALLATION SCREWS	-	F.H. MACHINE SCREWS
35	BW-75	-	BULB WEATHERSTRIPPING	VINYL	.375"H X .270 T-SLOT
36	T4216-K	-	PILE WITH FIN WEATHERSTRIPPING	-	ULTRAFAB
38	-	-	SHEAR CLIP, 4-1/2" LONG	ALUMINUM	-
39	DH-4	-	SHEAR BLOCK	6063-T5	-
40	-	2	3 X 2 X 1/8" ANGLE, 1-3/4" LONG	ALUMINUM	-
41	-	AS REQD.	REINFORCING BAR, FULL LENGTH	STEEL	1-1/2" X 1/2"
42	-	2/ LEAF	FLUSH BOLT GUIDE CHANNEL	ALUMINUM	3" LONG
43	-	2/ HINGE	HINGE REINFORCING PLATES	ALUMINUM	1-1/2" X 1/4" X 8" LONG

PRODUCT REVISED
as complying with the Florida Building Code
Acceptance No 08-0618.06
Expiration Date APR 26, 2012
By Chung L. Chan
Miami Dade Product Control Division

Engr: DR. HUMAYOUN FAROOQ
STRUCTURES
FLA. PE # 16557
C.A.N. 3538

JUN 09 2008

AL-FAROOQ CORPORATION
ENGINEERS & PRODUCT DEVELOPMENT
1235 S.W. 87 AVE
MIAMI, FLORIDA 33174
TEL. (305) 264-8100 FAX. (305) 262-6978

COMP-ANL\W06-81DD

DH-350 ALUM IN-SWING ENTRANCE DOOR (L.M.I.)

DELTA DOORS
7500 N.W. 69TH AVE.
MIAMI, FL 33166
TEL. (305) 888-0077 FAX. (305) 884-3111

revisions:

no	date	by	description
A	06.06.08		UPDATED FOR 2007 FBC

date: 11-22-06
scale: 3/8" = 1"
dr. by: HAMID
chk. by:

drawing no.
W06-81

sheet 7 of 8

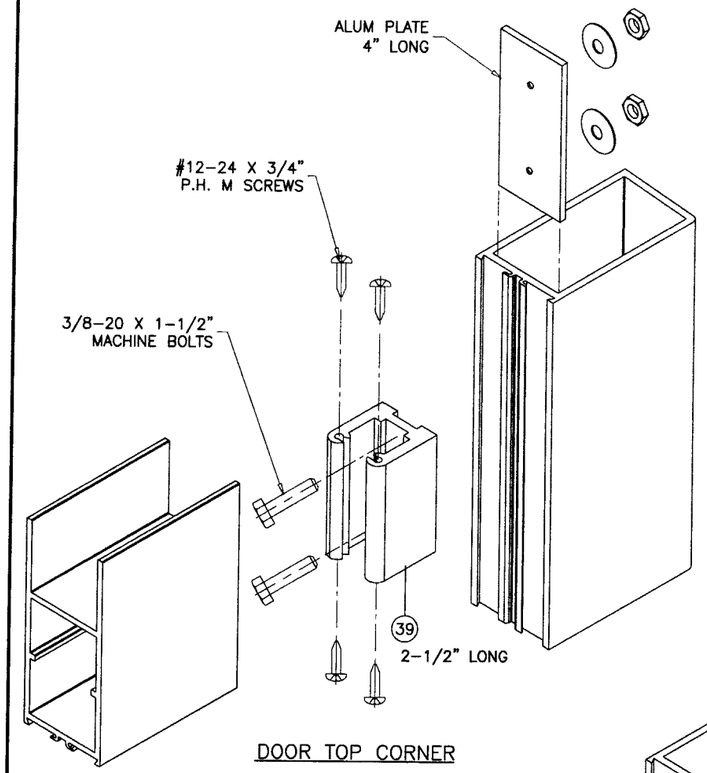

DOOR TOP CORNER

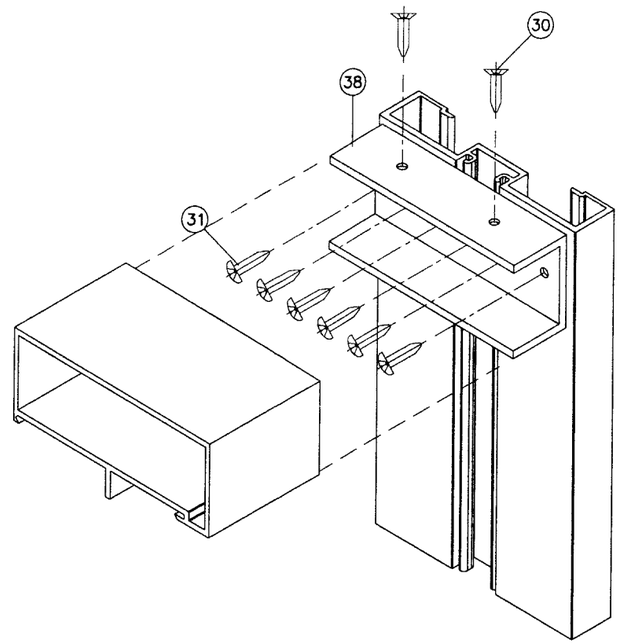

FRAME TOP CORNER

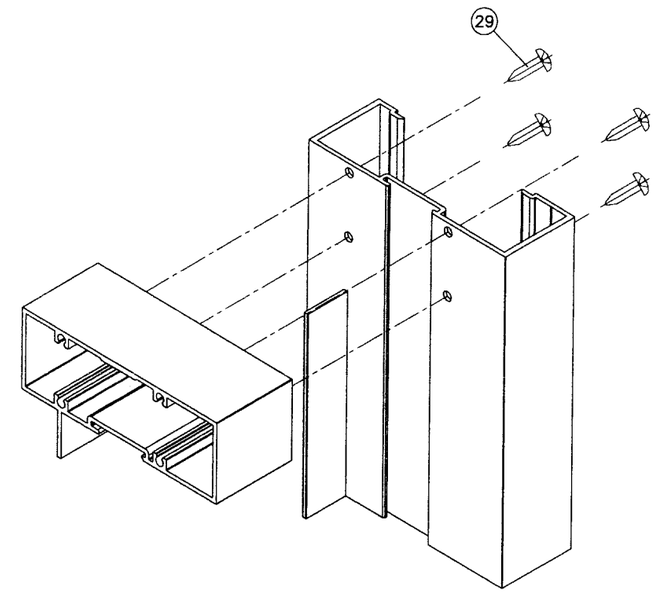

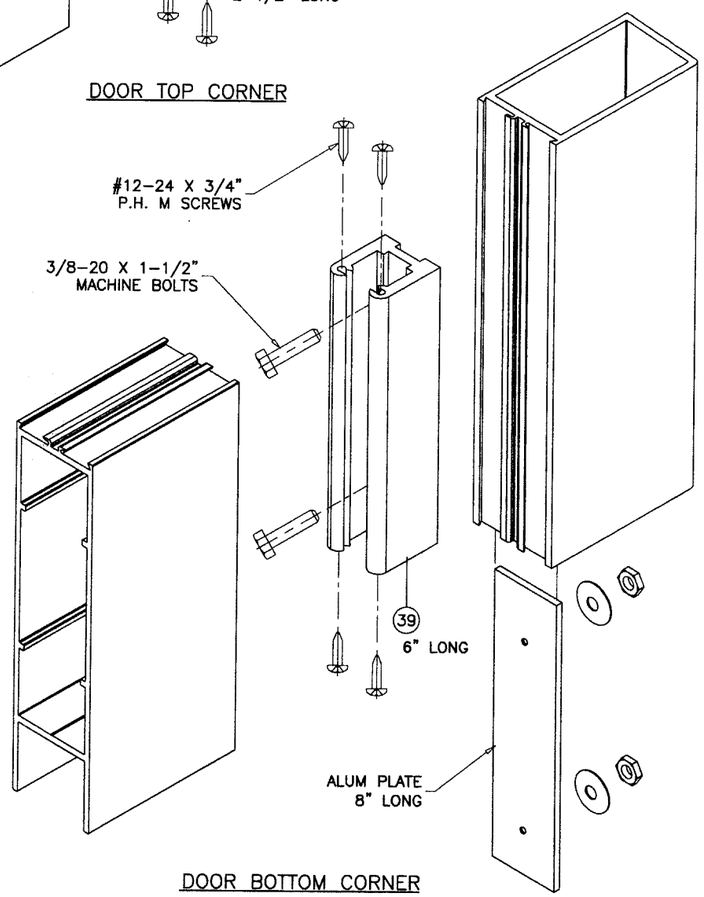

DOOR BOTTOM CORNER

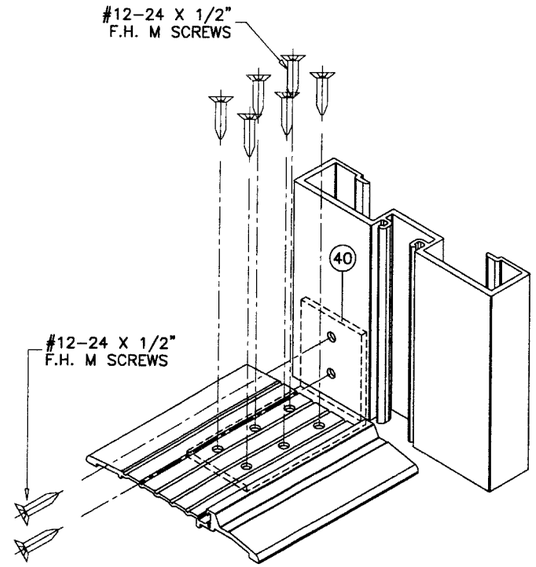

FRAME BOTTOM CORNER

PRODUCT REVISED
as complying with the Florida Building Code
Acceptance No 06-0618.06
Expiration Date APR 26, 2012
By Chang L. Chang
Miami Dade Product Control Division

Engr: DR. HUMAYOUN FAROOQ
STRUCTURES
FLA. PE # 16557
C.A.N. 3538

JUN 0 9 2008

AL-FAROOQ CORPORATION
ENGINEERS & PRODUCT DEVELOPMENT
1235 S.W. 87 AVE
MIAMI, FLORIDA 33174
TEL. (305) 264-8100 FAX. (305) 262-6978
COMP-ANL\W06-81DD

DH-350 ALUM IN-SWING ENTRANCE DOOR (L.M.I.)

DELTA DOORS
7500 N.W. 69TH AVE.
MIAMI, FL 33166
TEL. (305) 888-0077 FAX. (305) 884-3111

revisions:

no	date	by	description
A	06.06.08		UPDATED FOR 2007 FBC

date: 11-22-06
scale: 3/8" = 1"
dr. by: HAMID
chk. by:

drawing no.
W06-81

sheet 8 of 8