MIAMI-DADE COUNTY
BUILDING CODE COMPLIANCE OFFICE (BCCO)
PRODUCT CONTROL DIVISION

MIAMI-DADE COUNTY, FLORIDA
METRO-DADE FLAGLER BUILDING

140 WEST FLAGLER STREET, SUITE 1603
MIAMI, FLORIDA 33130-1563
(305) 375-2901 FAX (305) 375-2908
www.buildingcodeonline.com

NOTICE OF ACCEPTANCE (NOA)

Eastern Metal Supply, Inc.
4268 Westroads Dr.
West Palm Beach, Florida 33407

SCOPE:
This NOA is being issued under the applicable rules and regulations governing the use of construction materials. The documentation submitted has been reviewed by Miami-Dade County Product Control Division and accepted by the Board of Rules and Appeals (BORA) to be used in Miami Dade County and other areas where allowed by the Authority Having Jurisdiction (AHJ).

This NOA shall not be valid after the expiration date stated below. The Miami-Dade County Product Control Division (In Miami Dade County) and/or the AHJ (in areas other than Miami Dade County) reserve the right to have this product or material tested for quality assurance purposes. If this product or material fails to perform in the accepted manner, the manufacturer will incur the expense of such testing and the AHJ may immediately revoke, modify, or suspend the use of such product or material within their jurisdiction. BORA reserves the right to revoke this acceptance, if it is determined by Miami-Dade County Product Control Division that this product or material fails to meet the requirements of the applicable building code.

This product is approved as described herein, and has been designed to comply with the High Velocity Hurricane Zone of the Florida Building Code.

DESCRIPTION: 0.050" Solid Bertha Aluminum Storm Panels Shutter

APPROVAL DOCUMENT: Drawing No. 05-078, titled " 0.050" Bertha Aluminum Storm Panel", sheets 1 through 15 of 15, and 1A of 15, prepared by Tilteco, Inc., dated 04/28/2005, last revision #1 dated 04/28/2005, signed and sealed by Walter A. Tillit Jr., P.E. on 09/15/2005, bearing Miami-Dade County Product Control renewal stamp with the Notice of Acceptance number and expiration date by Miami-Dade County Product Control Division.

MISSILE IMPACT RATING: Large and Small Missile Impact

LABELING: Each panel shall bear a permanent label with the manufacturer's name or logo, city, state and the following statement: "Miami-Dade County Product Control Approved", unless otherwise noted herein.

RENEWAL of this NOA shall be considered after a renewal application has been filed and there has been no change in the applicable building code negatively affecting the performance of this product.

TERMINATION of this NOA will occur after the expiration date or if there has been a revision or change in the materials, use, and/or manufacture of the product or process. Misuse of this NOA as an endorsement of any product, for sales, advertising or any other purposes shall automatically terminate this NOA. Failure to comply with any section of this NOA shall be cause for termination and removal of NOA.

ADVERTISEMENT: The NOA number preceded by the words Miami-Dade County, Florida, and followed by the expiration date may be displayed in advertising literature. If any portion of the NOA is displayed, then it shall be done in its entirety.

INSPECTION: A copy of this entire NOA shall be provided to the user by the manufacturer or its distributors and shall be available for inspection at the job site at the request of the Building Official.

This NOA **renews NOA # 05-0926.03** and consists of this page 1, evidence submitted pages E-1, E-2, E-3, & E-4 as well as approval document mentioned above.

The submitted documentation was reviewed by **Helmy A. Makar, P.E., M.S.**

MIAMI-DADE COUNTY APPROVED

Helmy A. Makar
07/31/2008

NOA No. 08-0623.06
Expiration Date: 08/07/2013
Approval Date: 07/31/2008

Eastern Metal Supply, Inc.

NOTICE OF ACCEPTANCE: EVIDENCE SUBMITTED

1. EVIDENCE SUBMITTED UNDER PREVIOUS APPROVAL #96-1203.08

A. DRAWINGS

1. *Drawing Number 96-331, Eastern Metal Supply, Inc., 0.050" Bertha Storm Panel, sheets 1 through 8 of 8, prepared by Tilteco, Inc., revision 2, dated 07/15/97 signed and sealed by Walter A. Tillit Jr., P.E.*

B. TESTS

1. *Test report on Large Missile Impact Test, Cyclic Wind Pressure Test and Uniform Static Air Pressure Test on 0.050" aluminum storm panels, prepared by American Test Lab of South Florida, Test Report No. ATL #1022.01-96 dated 11/08/96, signed and sealed by William R. Mehner, P.E.*

C. CALCULATIONS

1. *Comparative Analysis and Anchor Analysis, dated 10/21/96, pages 1 through 15, prepared by Tilteco, Inc., signed and sealed by Walter A. Tillit Jr., P.E.*
2. *Calculations for revised anchor schedule, dated 05/02/97, pages 1 through 33, prepared by Tilteco, Inc., signed and sealed by Walter A. Tillit Jr., P.E.*

D. MATERIAL CERTIFICATIONS

1. *Mill Certified Inspection Report of coils, dated 01/23/96, for Aluminum Alloy 5052-H32 by Barmet Aluminum Corporation with chemical composition and physical properties.*
2. *Certified Tensile Test Report by Certified Testing Laboratories Report No. CTL #846B dated 10/31/96, for Aluminum Alloy, signed and sealed by Ramesh Patel, P.E.*

2. EVIDENCE SUBMITTED UNDER PREVIOUS APPROVAL #98-0817.16

A. DRAWINGS

1. *Drawing No. 98-172, titled "0.050" Bertha Storm Panel", prepared by Tilteco, Inc., dated July 7, 1998, last revision #1 dated July 7, 1998, sheets 1 through 8 of 8, signed and sealed by Walter A. Tillit Jr., P.E.*

B. TESTS

1. *None.*

C. CALCULATIONS

1. *None.*

D. MATERIAL CERTIFICATIONS

1. *Mill Certified Test Report issued by Nichols Aluminum dated 05/28/98, with chemical composition and mechanical properties of the 3004-H34 Aluminum Alloy panel.*

Helmy A. Makar, P.E., M.S.
Product Control Examiner
NOA No. 08-0623.06
Expiration Date: 08/07/2013
Approval Date: 07/31/2008

NOTICE OF ACCEPTANCE: EVIDENCE SUBMITTED

3. EVIDENCE SUBMITTED UNDER PREVIOUS APPROVAL #00-0602.04

A. DRAWINGS

1. *None.*

B. TESTS

1. *None.*

C. CALCULATIONS

1. *None.*

D. MATERIAL CERTIFICATIONS

1. *None.*

4. EVIDENCE SUBMITTED UNDER PREVIOUS APPROVAL #01-0516.06

A. DRAWINGS

1. *Drawing No. 01-058, titled " 0.050" Solid Bertha Aluminum Storm Panel", sheets 1 through 15 of 15, prepared by Tilteco, Inc., dated August 27, 2001, signed and sealed by Walter A. Tillit Jr., P.E.*

B. TESTS

1. *Test reports on 1) Uniform Static Air Pressure Test, per SFBC PA 202-94*
   2) Large Missile Impact Test per SFBC, PA 201-94
   3) Cyclic Wind Pressure Loading per SFBC, PA 203-94
   along with marked-up drawings and installation diagram of 0.050" Solid Aluminum Storm Panels Shutter, prepared by ATL of South Florida, Test Report No. 0221.01-01, dated 05/02/01, signed and sealed by Henry Hattem, P.E.
2. *Addendum to ATL of South Florida, Test Report No. 0221.01-01, dated 10/12/01, signed and sealed by Henry Hattem, P.E.*
3. *Addendum to ATL of South Florida, Test Report No. 0221.01-01, dated 02/04/02, signed and sealed by Henry Hattem, P.E.*

C. CALCULATIONS

1. *Anchor Analysis, dated 09/10/01, pages 1 through 53, prepared by Tilteco, Inc., signed and sealed by Walter A. Tillit Jr., P.E.*

D. MATERIAL CERTIFICATIONS

1. *Mill Certified Inspection Report of coils, dated 04/24/01, for Aluminum Alloy 3004 -H34 by NA Nichols Aluminum with chemical composition and physical properties.*
2. *Certified Tensile Test Report by QC Metallurgical, Inc., Report No. 1CM-384, dated 03/26/01, signed and sealed by frank Grate, P.E.*

Henry A. Makar, P.E., M.S.
Product Control Examiner
NOA No. 08-0623.06
Expiration Date: 08/07/2013
Approval Date: 07/31/2008

NOTICE OF ACCEPTANCE: EVIDENCE SUBMITTED

5. EVIDENCE SUBMITTED UNDER PREVIOUS APPROVAL # 03-0707.02

A. DRAWINGS

1. *Drawing No. 03-141, titled " 0.050" Solid Bertha Aluminum Storm Panel", sheets 1 through 15 of 15, prepared by Tilteco, Inc., dated July 02, 2003, last revision #1 dated July 02, 2003, signed and sealed by Walter A. Tillit Jr., P.E.*

B. TESTS

1. *None.*

C. CALCULATIONS

1. *None.*

D. MATERIAL CERTIFICATIONS

1. *None.*

E. OTHERS

1. *Letter from Tilteco, Inc., dated July 03, 2003, signed and sealed by Walter A. Tillit Jr., P.E., stating that the only change from the previous approved drawing # 01-058 are the general notes #1 & #11 to reference the Florida Building Code and the ASCE 7-98*

6. EVIDENCE SUBMITTED UNDER PREVIOUS APPROVAL # 05-0926.03

A. DRAWINGS

1. *Drawing No. 05-073, titled " 0.030" Thick Galvanized Bertha Steel Storm Panel", sheets 1 through 9 of 9, and 1A of 9, prepared by Tilteco, Inc., dated 04/25/2005, last revision #1 dated 04/25/2005 signed and sealed by Walter A. Tillit Jr., P.E. on 09/15/2005*

B. TESTS

1. *Test report on Large Missile Impact Test and Cyclic Wind Pressure Test of Galvanized Steel Storm Panels, prepared by American Test Lab of South Florida, Report No. ATLSF 0616.01-05, dated September 15, 2005, signed and sealed by William R. Mehner, P.E.*

C. CALCULATIONS

1. *Storm panel shutter Calculations, sheets 1 through 91 by Tilteco, Inc., signed and sealed by Walter A. Tillit Jr., P.E. on 09/13/2005.*

D. QUALITY ASSURANCE

1. *By Miami-Dade County Building Code Compliance Office.*

E. MATERIAL CERTIFICATIONS

1. *Tensile Test Report from QC Metallurgical, Inc., Job No. 51M-926, dated September 20, 2005, tested per ASTM E8-93, signed and sealed by Frank Grate, P.E.*

Hetmy A. Makar, P.E., M.S.
Product Control Examiner
NOA No. 08-0623.06
Expiration Date: 08/07/2013
Approval Date: 07/31/2008

NOTICE OF ACCEPTANCE: EVIDENCE SUBMITTED

7. NEW EVIDENCE SUBMITTED

A. DRAWINGS

1. None.

B. TESTS

1. None.

C. CALCULATIONS

1. None.

D. QUALITY ASSURANCE

1. By Miami-Dade County Building Code Compliance Office.

E. MATERIAL CERTIFICATIONS

1. None.

Helmy A. Makar, P.E., M.S.
Product Control Examiner
NOA No. 08-0623.06
Expiration Date: 08/07/2013
Approval Date: 07/31/2008

GENERAL NOTES:

1. STORM PANEL SHOWN ON THIS PRODUCT APPROVAL DOCUMENT (P.A.D.) HAS BEEN VERIFIED FOR COMPLIANCE IN ACCORDANCE WITH THE 2004 EDITION OF THE FLORIDA BUILDING CODE.
DESIGN WIND LOADS SHALL BE DETERMINED AS PER SECTION 1620 OF THE ABOVE MENTIONED CODE, FOR A BASIC WIND SPEED AS REQUIRED BY THE JURISDICTION WHERE STORM PANEL WILL BE INSTALLED, AND FOR A DIRECTIONALITY FACTOR Kd=0.85, IN ACCORDANCE WITH ASCE 7-98 STANDARD. IN ORDER TO VERIFY THAT COMPONENTS AND ANCHORS ON THIS P.A.D. AS TESTED WERE NOT OVER STRESSED, A 33% INCREASE IN ALLOWABLE STRESS FOR WIND LOADS WAS **NOT** USED IN THEIR ANALYSIS. A DURATION FACTOR CD=1.60 WAS USED FOR VERIFICATION OF FASTENERS IN WOOD.

STORM PANEL'S ADEQUACY FOR IMPACT AND FATIGUE RESISTANCE HAS BEEN VERIFIED IN ACCORDANCE WITH SECTION 1609.1.4 OF THE ABOVE MENTIONED CODE AS PER ATL REPORTS # 1022.01-01, # 0221.01 AND # 0616.02-05, AS PROTOCOLS TAS-201, TAS-202 AND TAS-203.

2. ALL ALUMINUM SHEET METAL PANELS SHALL HAVE 5052-H32 OR 3004-H34 ALLOY.

3. ALL ALUMINUM EXTRUSIONS SHALL BE ALUMINUM ASSOCIATION 6063-T6 ALLOY & TEMPER UNLESS OTHERWISE NOTED.

4. ALL SCREWS TO BE STAINLESS STEEL 304 OR 316 AISI SERIES OR CORROSION RESISTANT COATED CARBON STEEL AS PER DIN 50018 W/ 50 ksi YIELD STRENGTH AND 90 ksi TENSILE STRENGTH.

5. BOLTS TO BE ASTM A-307 GALVANIZED STEEL OR AISI 304 SERIES STAINLESS STEEL, WITH 35 ksi MINIMUM YIELD STRENGTH.

6. ANCHORS TO WALL SHALL BE AS FOLLOWS: (UNLESS OTHERWISE NOTED)

(A) TO EXISTING POURED CONCRETE:
- 1/4" ø TAPCON ANCHORS AS MANUFACTURED BY I.T.W. BUILDEX. (REGULAR OR 410 S.S.)
- 1/4" ø CRETE-FLEX SS4 ANCHORS AS MANUFACTURED BY ELCO TEXTRON.
- 1/4" ø CF TAP-GRIP ANCHORS (BERTHA STUD-CON), AS MANUFACTURED BY TRU-FAST CORPORATION.
- 1/4" ø ZAMAC NAILIN ANCHORS AS MANUFACTURED BY POWER FASTENERS, INC.
- 1/4" ø x 7/8" CALK-IN ANCHORS OR ELCO male & female "PANELMATE" AS MANUFACTURED BY POWER FASTENERS, INC. AND ELCO TEXTRON, RESPECTIVELY.
- 1/4" ø x 3/4" ALL POINTS SOLID-SET ANCHORS AS DISTRIBUTED BY ALL POINTS SCREW, BOLT & SPECIALTY COMPANY.

NOTES:

A.1) MINIMUM EMBEDMENT INTO POURED CONCRETE OF TAPCON ANCHORS OR CRETE-FLEX SS4 IS 1 3/4"; FOR ZAMAC NAILIN ANCHORS IS 1 3/8"; FOR ELCO PANELMATE ANCHORS IS 1 3/4", AND FOR CF TAP-GRIP ANCHORS IS 1 1/4".

A.2) 7/8" CALK-IN ANCHORS SHALL BE ENTIRELY EMBEDDED INTO THE POURED CONCRETE. NO EMBEDMENT INTO STUCCO SHALL BE PERMITTED. 1/4"ø-20 SCREWS USED SHALL BE 1 1/2" LONG MINIMUM SHOULD STUCCO EXIST, AND 1" MINIMUM FOR WALLS WITH NO STUCCO.

A.3) MINIMUM EMBEDMENT OF 1/4"ø x 3/4" ALL POINTS SOLID-SET ANCHORS SHALL BE 7/8" INTO THE POURED CONCRETE. NO EMBEDMENT INTO STUCCO SHALL BE PERMITTED. 1/4" ø-20 S.S. MACHINE SCREW USED SHALL BE 1 1/2" LONG MINIMUM SHOULD STUCCO EXIST, AND 1" MINIMUM FOR WALLS WITH NO STUCCO.

A.4) IN CASE THAT PRECAST STONE, PRECAST CONCRETE PANELS, OR PAVERS BE FOUND ON THE EXISTING WALL OR FLOOR, ANCHORS SHALL BE LONG ENOUGH TO REACH THE MAIN STRUCTURE BEHIND SUCH PANELS, ANCHORAGE SHALL BE AS INDICATED ON NOTES A.1) & A.2) ABOVE.

(B) TO EXISTING CONCRETE BLOCK WALL:
- 1/4" ø TAPCON ANCHORS AS MANUFACTURED BY I.T.W. BUILDEX. (REGULAR OR 410 S.S.)
- 1/4" ø CRETE-FLEX SS4 ANCHORS AS MANUFACTURED BY ELCO TEXTRON.
- 1/4" ø CF TAP-GRIP ANCHORS (BERTHA STUD-CON), AS MANUFACTURED BY TRU-FAST CORPORATION.
- 1/4" ø ZAMAC NAILIN ANCHORS AS MANUFACTURED BY POWER FASTENERS, INC.
- 1/4" ø x 7/8" CALK-IN ANCHORS OR ELCO male & female "PANELMATE" AS MANUFACTURED BY POWER FASTENERS, INC. AND ELCO TEXTRON, RESPECTIVELY.
- 1/4" ø x 3/4" ALL POINTS SOLID-SET ANCHORS AS DISTRIBUTED BY ALL POINTS SCREW, BOLT & SPECIALTY COMPANY.

NOTES:

B.1) MINIMUM EMBEDMENT OF TAPCON, ELCO PANELMATE, CF TAP-GRIP AND CRETE-FLEX SS4 ANCHORS INTO CONCRETE BLOCK UNIT SHALL BE 1 1/4"; 1 3/8" FOR ZAMAC NAILIN ANCHORS.

B.2) 7/8" CALK-IN ANCHORS SHALL BE ENTIRELY EMBEDDED INTO THE CONCRETE BLOCK UNIT. NO EMBEDMENT INTO STUCCO SHALL BE PERMITTED. 1/4"ø-20 SCREWS USED SHALL BE 1 1/2" LONG MINIMUM SHOULD STUCCO EXIST, AND 1" MINIMUM FOR WALLS WITH NO STUCCO.

B.3) MINIMUM EMBEDMENT OF 1/4"ø x 3/4" ALL POINTS SOLID-SET ANCHORS SHALL BE 7/8" INTO THE CONCRETE BLOCK. NO EMBEDMENT INTO STUCCO SHALL BE PERMITTED. 1/4" ø-20 S.S. MACHINE SCREW USED SHALL BE 1 1/2" LONG MINIMUM SHOULD STUCCO EXIST, AND 1" MINIMUM FOR WALLS WITH NO STUCCO.

B.4) IN CASE THAT PRECAST STONE OR PRECAST CONCRETE PANELS BE FOUND ON THE EXISTING WALL, ANCHORS SHALL BE LONG ENOUGH TO REACH THE MAIN STRUCTURE BEHIND SUCH PANELS. ANCHORAGE SHALL BE AS INDICATED ON NOTES IN B.1) AND B.2) ABOVE.

(C) ANCHORS SHALL BE INSTALLED FOLLOWING ALL OF THE RECOMMENDATIONS AND SPECIFICATIONS OF THE ANCHOR'S MANUFACTURER.

7. PANELS MAY ALSO BE INSTALLED HORIZONTALLY FOLLOWING INSTALLATION DETAILS SHOWN ON SECTIONS 1 THRU 16 (SHEET 3 & 7 OF 15) EXCEPT THAT HEADERS 2, 3 & 4 SHALL NOT BE USED.

8. IT SHALL BE THE RESPONSIBILITY OF THE CONTRACTOR TO VERIFY THE SOUNDNESS OF THE STRUCTURE WHERE SHUTTER IS TO BE ATTACHED TO INSURE PROPER ANCHORAGE. THIS SHUTTER SHALL ONLY BE ATTACHED TO CONCRETE, BLOCK OR WOOD FRAME BUILDINGS.

9. THE INSTALLATION CONTRACTOR IS TO SEAL/CAULK ALL SHUTTER COMPONENT EDGES WHICH REMAIN IN CONTINUOUS CONTACT WITH THE BUILDING TO PREVENT WIND/RAIN INTRUSION. CAULK AND SEAL SHUTTER TRACKS ALL AROUND FULL LENGTH.

10. STORM PANEL INSTALLATION SHALL COMPLY WITH SPECS INDICATED IN THIS DRAWING PLUS ANY BUILDING AND ZONING REGULATIONS PROVIDED BY THE JURISDICTION WHERE PERMIT IS APPLIED TO.

11. (a) THIS PRODUCT APPROVAL DOCUMENT (P.A.D.) PREPARED BY THIS ENGINEER IS GENERIC AND DOES NOT PROVIDE INFORMATION FOR A SITE SPECIFIC PROJECT; i.e. WHERE THE SITE CONDITIONS DEVIATE FROM THE P.A.D.

(b) CONTRACTOR TO BE RESPONSIBLE FOR THE SELECTION, PURCHASE AND INSTALLATION INCLUDING LIFE SAFETY OF THIS PRODUCT BASED ON THIS P.A.D. PROVIDED HE/SHE DOES NOT DEVIATE FROM THE CONDITIONS DETAILED ON THIS DOCUMENT. CONSTRUCTION SAFETY AT SITE IS THE CONTRACTOR'S RESPONSIBILITY.

(c) THIS PRODUCT APPROVAL DOCUMENT WILL BE CONSIDERED INVALID IF MODIFIED.

(d) SITE SPECIFIC PROJECTS SHALL BE PREPARED BY A FLORIDA REGISTERED ENGINEER OR ARCHITECT WHICH WILL BECOME THE ENGINEER OF RECORD (E.O.R.) FOR THE PROJECT AND WHO WILL BE RESPONSIBLE FOR THE PROPER USE OF THE P.A.D. ENGINEER OF RECORD, ACTING AS A DELEGATED ENGINEER TO THE P.A.D. ENGINEER, SHALL SUBMIT TO THIS LATTER THE SITE SPECIFIC DRAWINGS FOR REVIEW.

(e) THIS P.A.D. SHALL BEAR THE DATE AND ORIGINAL SEAL AND SIGNATURE OF THE PROFESSIONAL ENGINEER OF RECORD THAT PREPARED IT.

12. SHUTTER MANUFACTURER'S LABEL SHALL BE PLACED ON A READILY AND VISIBLE LOCATION AT PANEL.
ONE LABEL SHALL BE PLACED FOR EVERY OPENING.
LABEL SHALL READ AS FOLLOWS:
EASTERN METAL SUPPLY, INC.
WEST PALM BEACH, FL.
MIAMI-DADE COUNTY PRODUCT CONTROL APPROVED.

PRODUCT RENEWED
as complying with the Florida Building Code
Acceptance No 08-0623.06
Expiration Date 08/07/2013
By Miami Dade Product Control Division

PRODUCT REVISED
as complying with the Florida Building Code
Acceptance No 05-0926.03
Expiration Date 08/07/2008
By Miami Dade Product Control Division

F.B.C.(High Velocity Hurricane Zone)

SEP 15 2005

TILTECO INC.
TILLIT TESTING & ENGINEERING COMPANY
6355 N.W. 36th. St., Ste. 305, VIRGINIA GARDENS, Fl. 33166
Phone : (305)871-1530 . Fax : (305)871-1531
EB-0006719
WALTER A. TILLIT Jr. P. E.
FLORIDA Lic. # 44167

0.050" BERTHA ALUMINUM STORM PANEL

EASTERN METAL SUPPLY, INC.
4268 WESTROADS DR.
WEST PALM BEACH, FL 33407

REV. NO	DESCRIPTION	DATE	REV. No	DESCRIPTION	DATE
1	OLD 03-141	4/28/05	3	-	-
2	-	-	4	-	-

L.G.
DRAWN BY:

4/28/05
DATE

05-078
DRAWING No

SHEET 1 OF 15

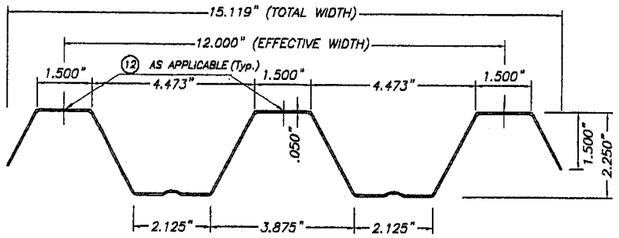

1 ALUMINUM PANEL

SCALE : 1/4" = 1"

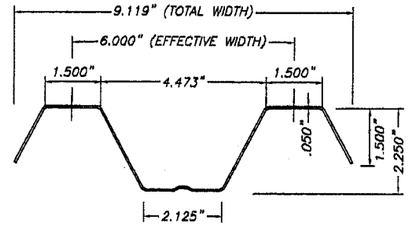

1A ALUMINUM HALF PANEL

SCALE : 1/4" = 1"

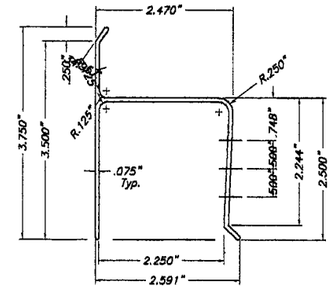

2 "h" HEADER

SCALE : 3/8" = 1"

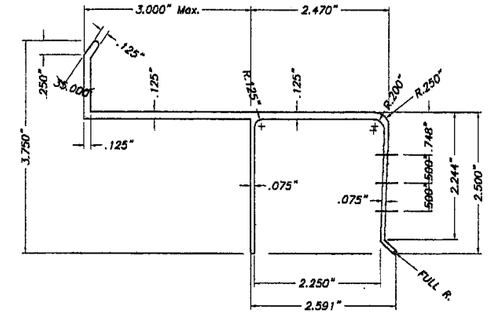

3 3" Max. "U" BUILD OUT

SCALE : 3/8" = 1"

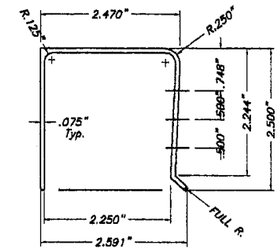

4 "U" HEADER

SCALE : 3/8" = 1"

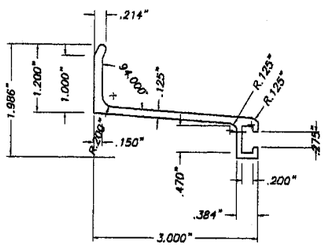

5 3" ANGLE BUILD OUT BRACKET

SCALE : 3/8" = 1"

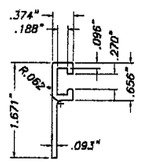

6 "F" TRACK

SCALE : 3/8" = 1"

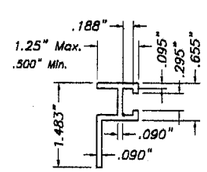

6A 1 1/4" MAX. B. O. "F" TRACK

SCALE : 3/8" = 1"

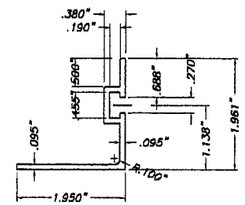

7 REVERSED "F" ANGLE TRACK

SCALE : 3/8" = 1"

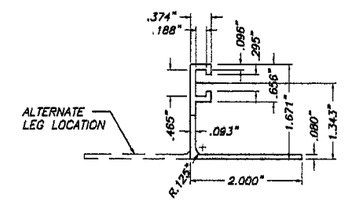

8 "F" TRACK ANGLE

SCALE : 3/8" = 1"

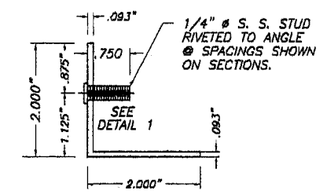

9 STUDDED ANGLE

6063-T5 Alum. ALLOY
SCALE : 3/8" = 1"

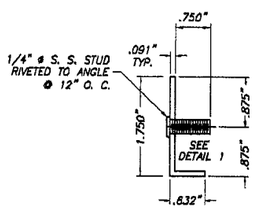

9A MINI WALL 1.75"x0.632" ANGLE WITH STUD

SCALE: 1/2" = 1"

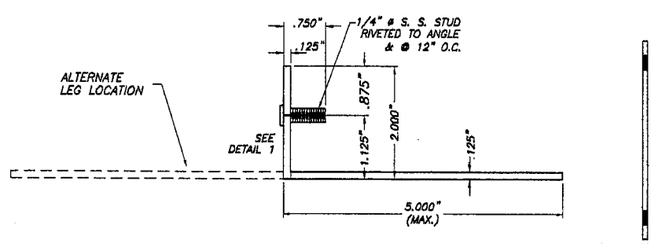

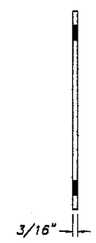

10 2"x5"(MAX.)x1/8" ANGLE WITH STUD

SCALE: 3/8" = 1"

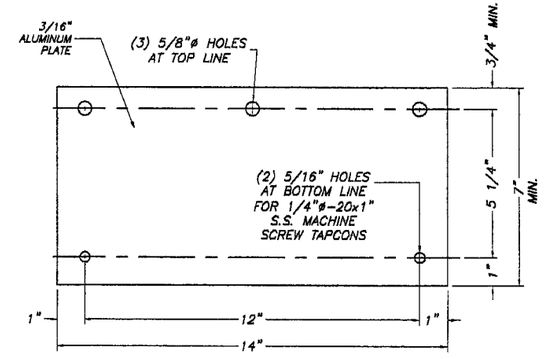

11 3/16"x7"x14" LONG WALL PLATE

SCALE: 3/16" = 1"

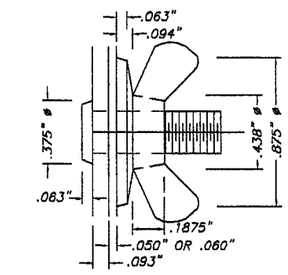

DETAIL 1: STUD W/ DIE CAST ZINC NICKEL PLATED WING NUT

PRODUCT RENEWED
as complying with the Florida Building Code
Acceptance No. 08-0623.06
Expiration Date 08/07/2013
By Helena A. Melo
Miami Dade Product Control Division

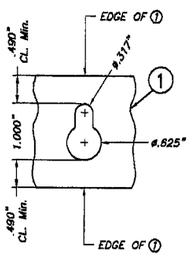

OPTION 1

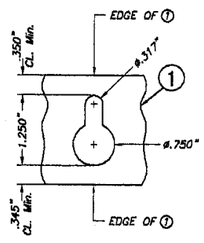

OPTION 2

12 KEY HOLE AT PANEL

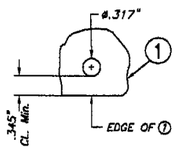

12A ROUND HOLE AT PANEL (OPTION TO 12)

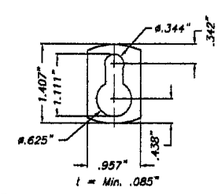

13 KEY HOLE WASHER

3105-H154 Alum. ALLOY
SCALE : 3/8" = 1"

PRODUCT REVISED
as complying with the Florida Building Code
Acceptance No. 05-0926.03
Expiration Date 08/07/2008
By Helena A. Melo
Miami Dade Product Control Division

F.B.C.(High Velocity Hurricane Zone)

COMPONENTS

SEP 1 5 2005

TILTECO INC.
TILLIT TESTING & ENGINEERING COMPANY
6355 N.W. 36th. St., Ste. 305, VIRGINIA GARDENS, Fl. 33166
Phone : (305)871-1530 . Fax : (305)871-1531
EB-0006719
WALTER A. TILLIT Jr. P. E.
FLORIDA Lic. # 44167

0.050" BERTHA ALUMINUM STORM PANEL

EASTERN METAL SUPPLY, INC.
4268 WESTROADS DR.
WEST PALM BEACH, FL 33407

REV. NO	DESCRIPTION	DATE	REV. No	DESCRIPTION	DATE
1	OLD 03-141	4/28/05	3	-	-
2	-	-	4	-	-

L.G.
DRAWN BY:

4/28/05
DATE

05-078
DRAWING No

SHEET 1A OF 15

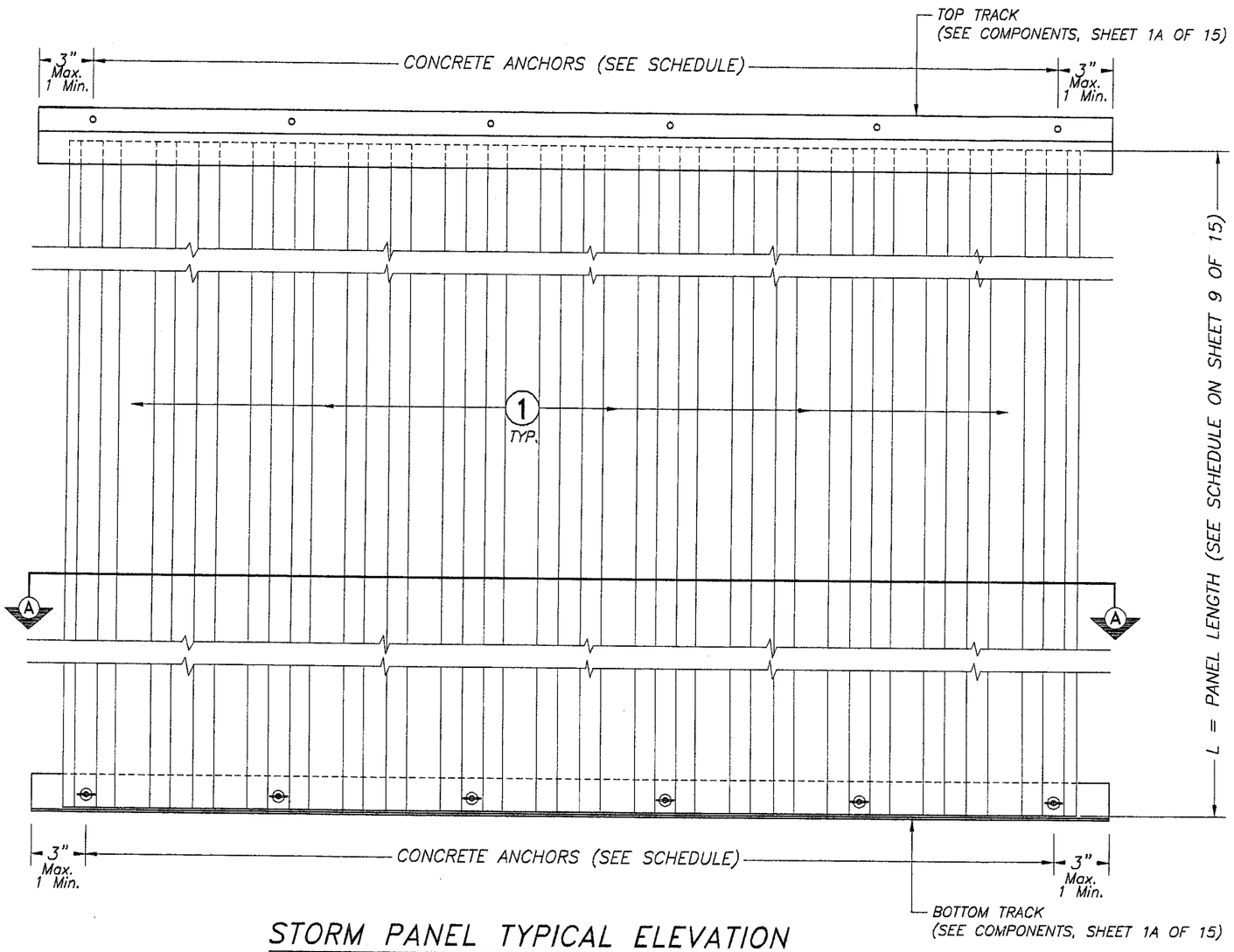

STORM PANEL TYPICAL ELEVATION

SCALE : 1/8" = 1"

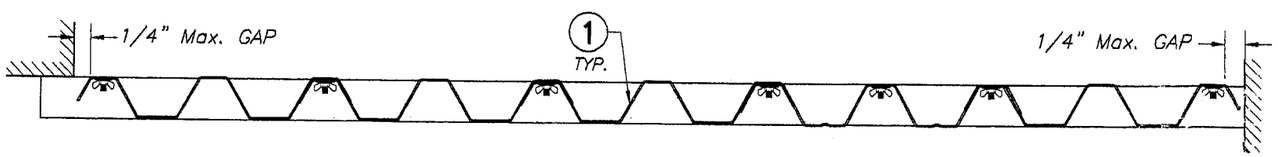

SECTION A–A

SCALE : 1/8" = 1"

PRODUCT RENEWED
as complying with the Florida Building Code
Acceptance No 08-0623.06
Expiration Date 08/07/2013
By Helena A. Melo
Miami Dade Product Control Division

PRODUCT REVISED
as complying with the Florida Building Code
Acceptance No 05-0926.03
Expiration Date 08/07/2008
By Helena A. Melo
Miami Dade Product Control Division

F.B.C.(High Velocity Hurricane Zone)

SEP 15 2005

TILTECO INC.
TILLIT TESTING & ENGINEERING COMPANY
6355 N.W. 36th. St., Ste. 305, VIRGINIA GARDENS, FL 33166
Phone : (305)871-1530 . Fax : (305)871-1531
EB-0006719
WALTER A. TILLIT Jr. P. E.
FLORIDA Lic. # 44167

0.050" BERTHA ALUMINUM STORM PANEL

EASTERN METAL SUPPLY, INC.
4268 WESTROADS DR.
WEST PALM BEACH, FL 33407

REV. NO	DESCRIPTION	DATE	REV. No	DESCRIPTION	DATE
1	OLD 03-141	4/28/05	3	–	–
2	–	–	4	–	–

L.G.
DRAWN BY:

4/28/05
DATE

05-078
DRAWING No

SHEET 2 OF 15

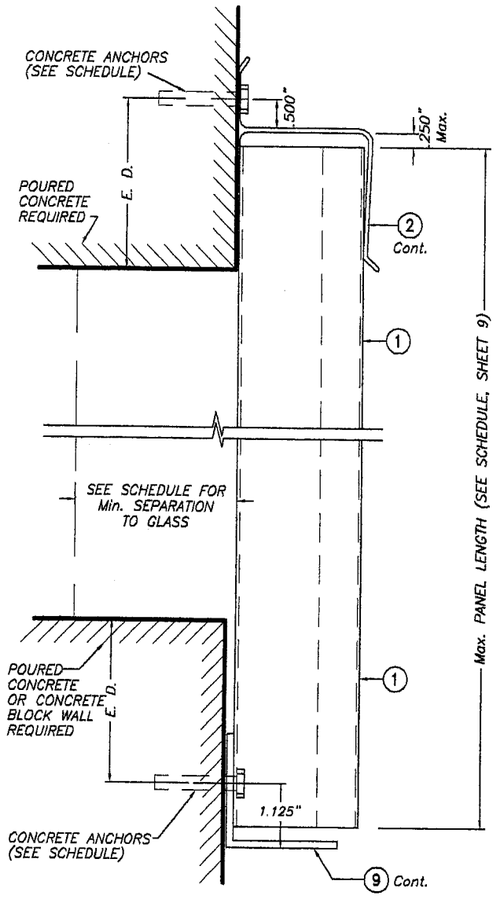

SECTION @ ANCHOR

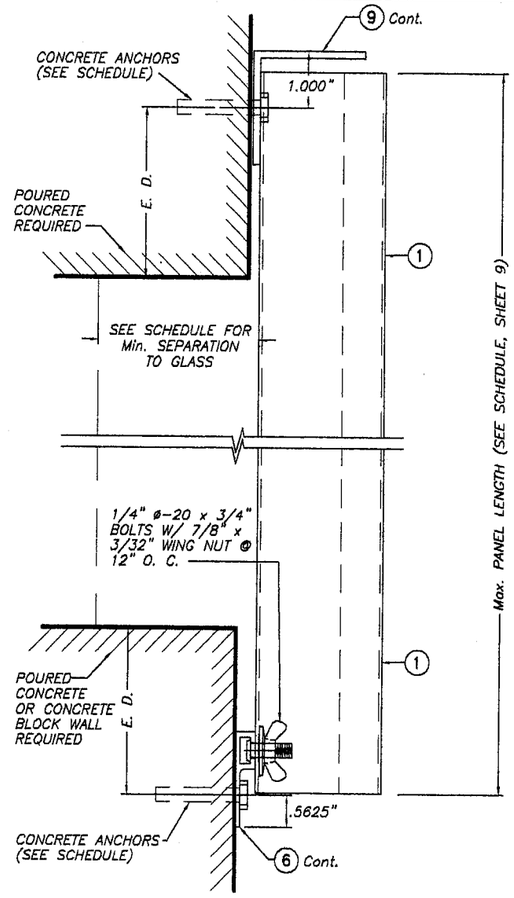

WALL MOUNTING INSTALLATION SECTION 2

SCALE : 3/8" = 1"

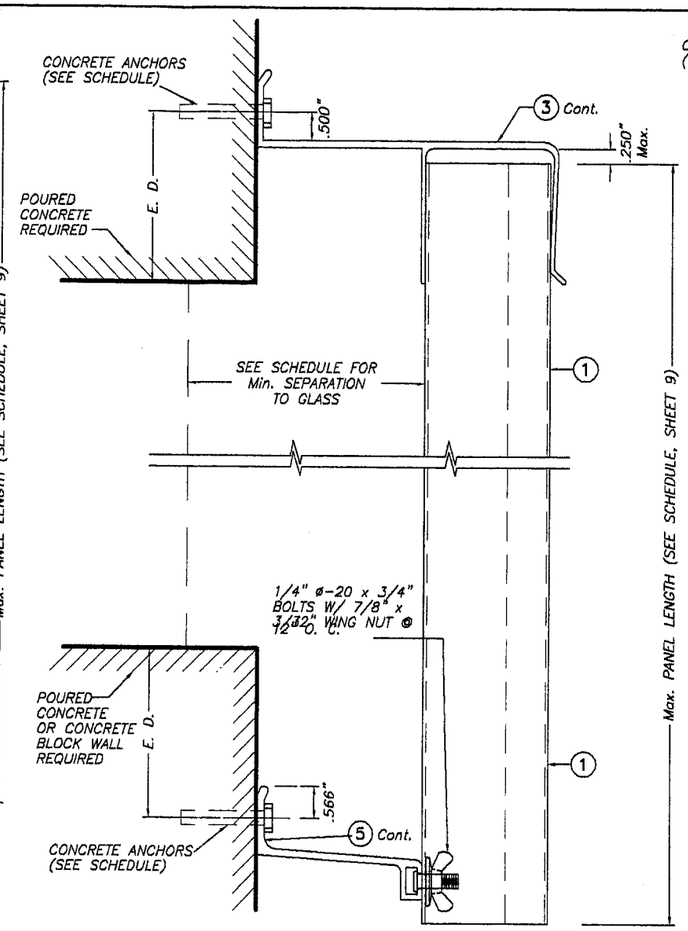

BUILD OUT INSTALLATION SECTION 3

SCALE : 3/8" = 1"

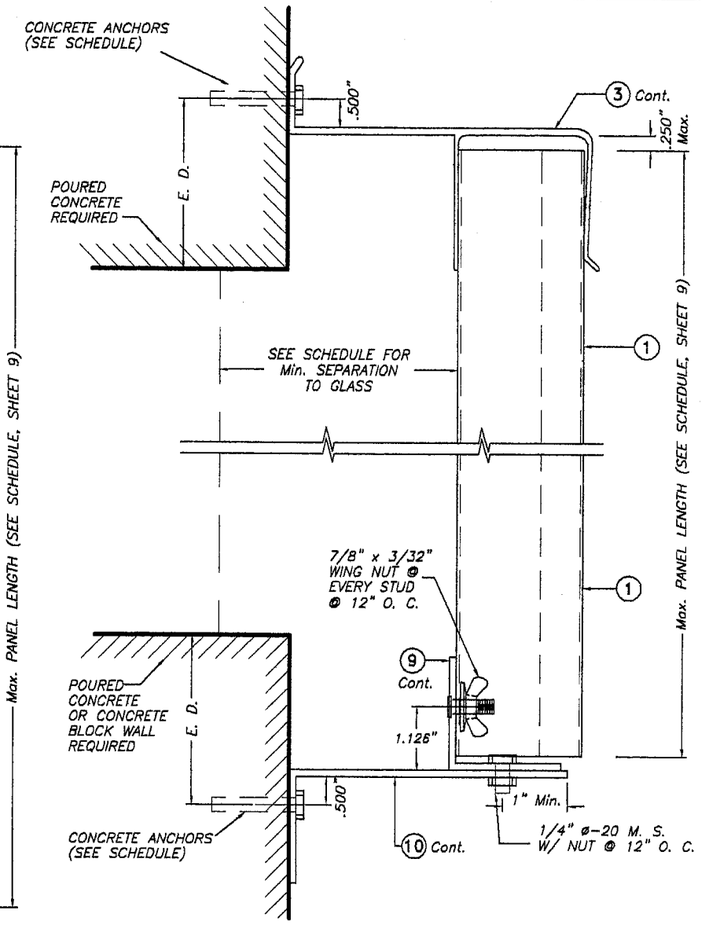

BUILD OUT INSTALLATION SECTION 4

SCALE : 3/8" = 1"

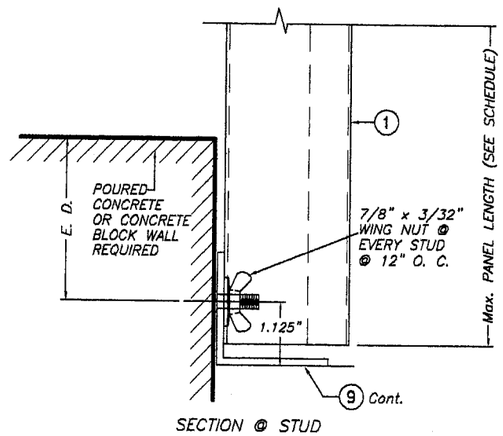

SECTION @ STUD

WALL MOUNTING INSTALLATION SECTION 1

SCALE : 3/8" = 1"

NOTE : DETAIL OF SECTION @ STUD VALID ALSO FOR WALL MOUNTING INSTALLATION – SECTION 2 (TOP)

E. D. = EDGE DISTANCE (SEE SCHEDULE ON SHEETS 10 & 11 OF 15)

NOTE FOR COMBINATION OF SECTIONS :

WALL MOUNTING SECTIONS CAN BE COMBINED IN ANY WAY TO SUIT ANY INSTALLATION.

PRODUCT RENEWED as complying with the Florida Building Code Acceptance No 08-0623.06 Expiration Date 08/07/2013 By Miami Dade Product Control Division

PRODUCT REVISED as complying with the Florida Building Code Acceptance No 05-0926.03 Expiration Date 08/07/2008 By Miami Dade Product Control Division

F.B.C.(High Velocity Hurricane Zone)

TILTECO INC.
TILLIT TESTING & ENGINEERING COMPANY
6355 N.W. 36th. St., Ste. 305, VIRGINIA GARDENS, Fl. 33166
Phone : (305)871-1530 . Fax : (305)871-1531
EB-0008719
WALTER A. TILLIT Jr. P. E.
FLORIDA Lic. # 44167

0.050" BERTHA ALUMINUM STORM PANEL

EASTERN METAL SUPPLY, INC.
4268 WESTROADS DR.
WEST PALM BEACH, FL 33407

REV. NO	DESCRIPTION	DATE	REV. No	DESCRIPTION	DATE
1	OLD 03-141	4/28/05	3	–	–
2	–	–	4	–	–

L.G. DRAWN BY:
4/28/05 DATE
05-078 DRAWING No
SHEET 3 OF 15

SEP 1 5 2005

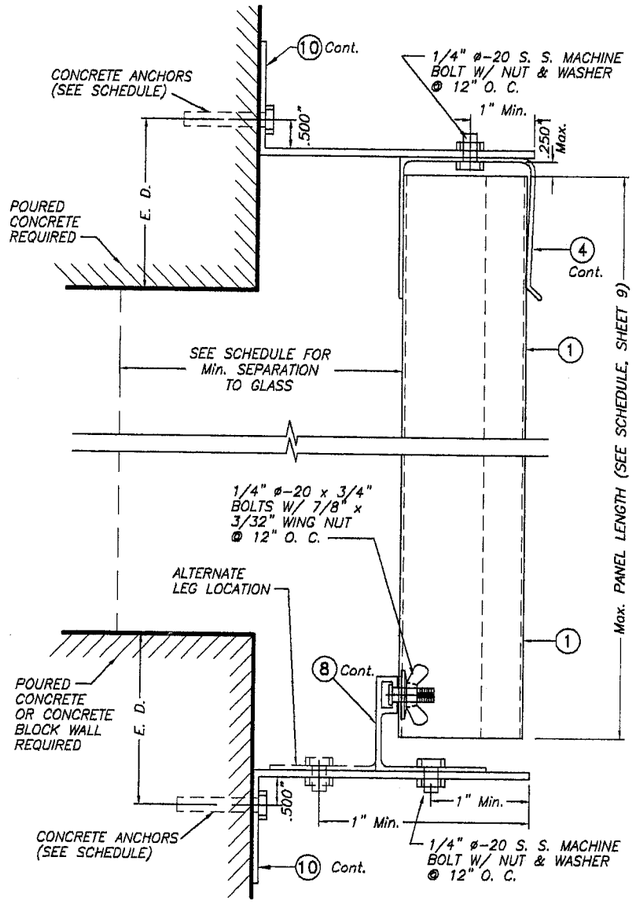

BUILD OUT INSTALLATION – SECTION 5

SCALE : 3/8" = 1"

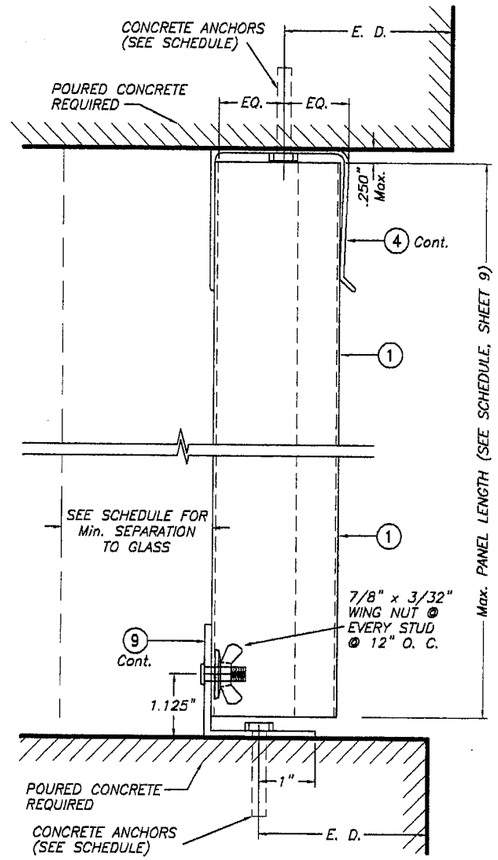

CEILING & FLOOR MOUNTING INSTALLATION – SECTION 6

SCALE : 3/8" = 1"

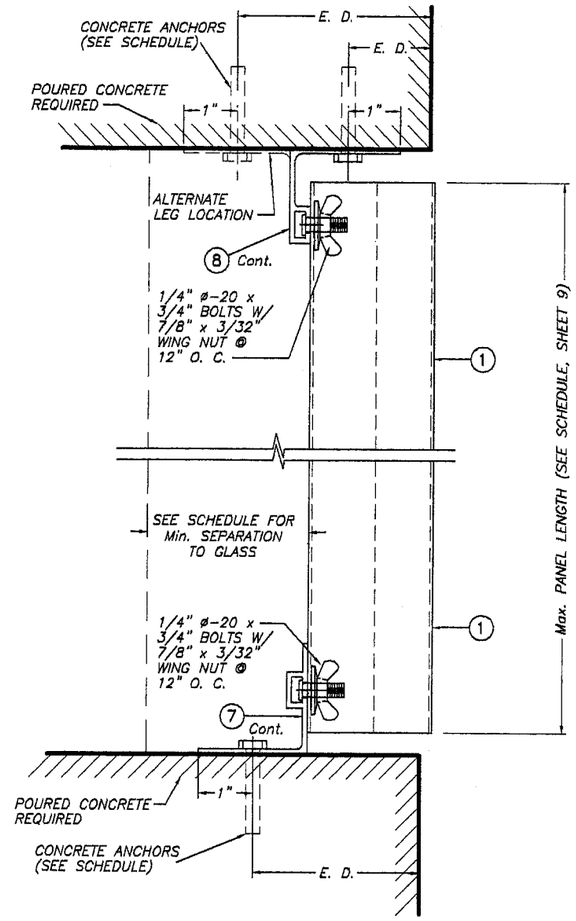

CEILING & FLOOR MOUNTING INSTALLATION – SECTION 7

SCALE : 3/8" = 1"

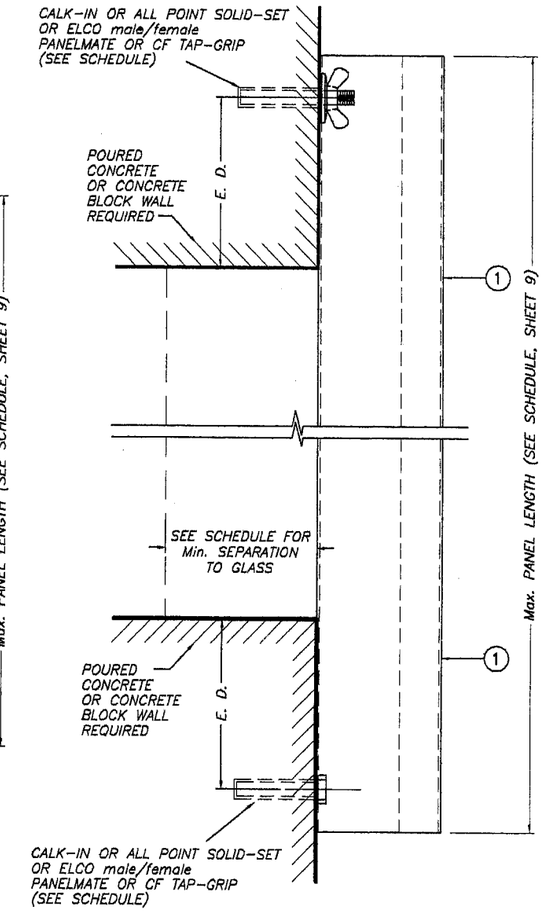

WALL MOUNTING INSTALLATION (D. M.) – SECTION 8

SCALE : 3/8" = 1"

E. D. = EDGE DISTANCE (SEE SCHEDULE ON SHEETS 10 & 11 OF 15)

NOTE FOR COMBINATION OF SECTIONS :

WALL/FLOOR/CEILING MOUNTING SECTIONS CAN BE COMBINED IN ANY WAY TO SUIT ANY INSTALLATION.

PRODUCT RENEWED
as complying with the Florida Building Code
Acceptance No. 08-0623.06
Expiration Date 08/07/2013
By Helena A. Melo
Miami Dade Product Control Division

PRODUCT REVISED
as complying with the Florida Building Code
Acceptance No. 05-0926.03
Expiration Date 08/07/2008
By Helena A. Melo
Miami Dade Product Control Division

F.B.C.(High Velocity Hurricane Zone)

SEP 15 2005

TILTECO INC.
TILLIT TESTING & ENGINEERING COMPANY
6355 N.W. 36th. St., Ste. 305, VIRGINIA GARDENS, FL. 33166
Phone : (305)871-1530 . Fax : (305)871-1531
EB-0006719
WALTER A. TILLIT Jr. P. E.
FLORIDA Lic. # 44167

0.050" BERTHA ALUMINUM STORM PANEL

EASTERN METAL SUPPLY, INC.
4268 WESTROADS DR.
WEST PALM BEACH, FL 33407

REV. NO	DESCRIPTION	DATE	REV. No	DESCRIPTION	DATE
1	OLD 03-141	4/28/05	3	–	–
2	–	–	4	–	–

L.G.
DRAWN BY:

4/28/05
DATE

05-078
DRAWING No

SHEET 4 OF 15

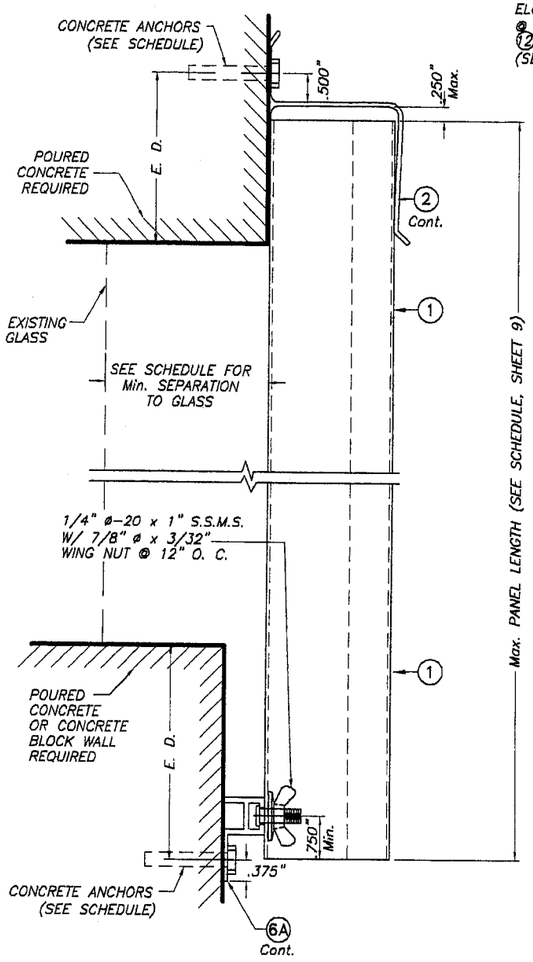

WALL MOUNTING INSTALLATION SECTION 9

SCALE : 3/8" = 1"

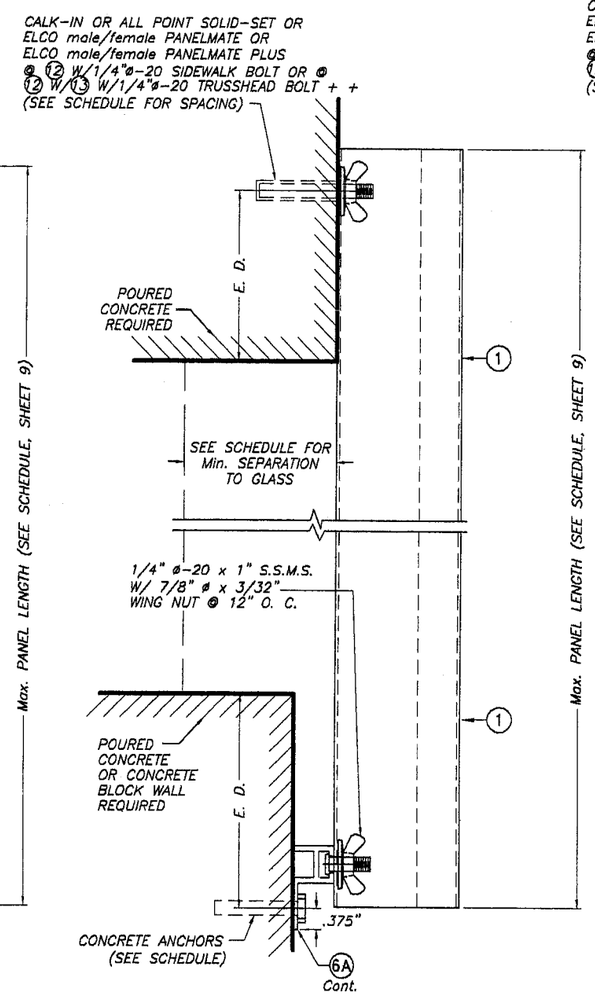

WALL MOUNTING INSTALLATION SECTION 10

SCALE : 3/8" = 1"

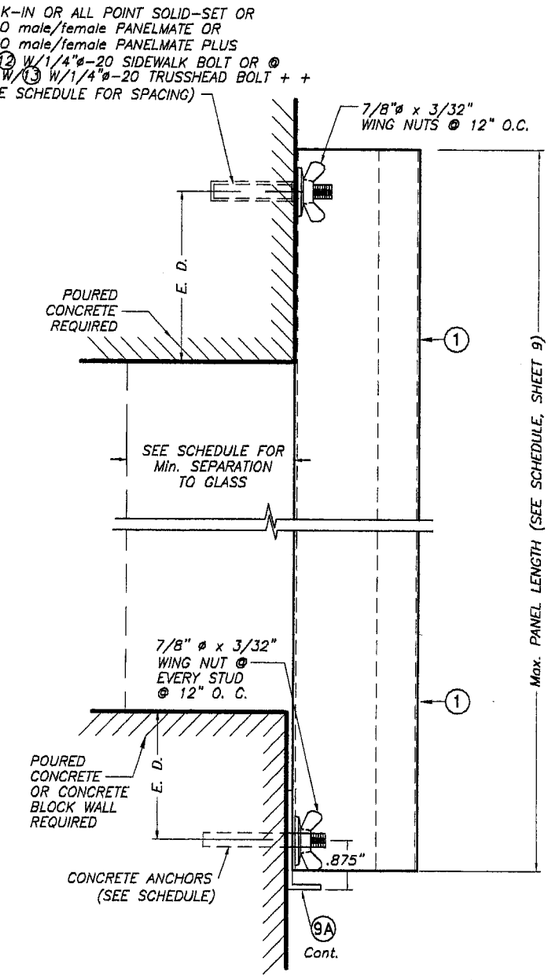

WALL MOUNTING INSTALLATION SECTION 11

SCALE : 3/8" = 1"

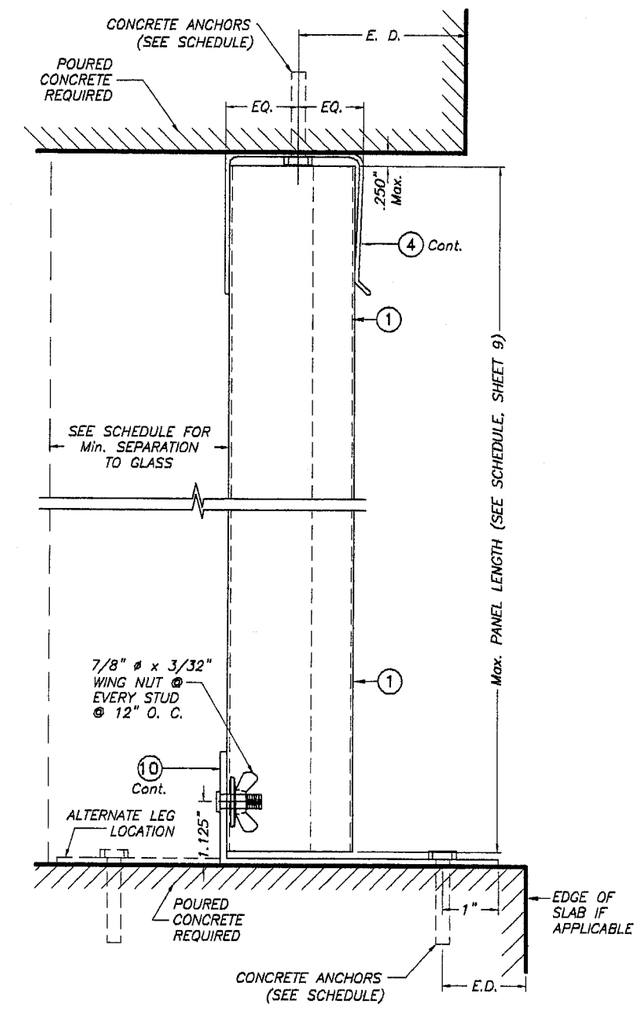

CEILING & FLOOR MOUNTING INSTALLATION SECTION 12

SCALE : 3/8" = 1"

PRODUCT RENEWED
as complying with the Florida Building Code
Acceptance No 08-0623.06
Expiration Date 08/07/2013
By Helena A. Martin
Miami Dade Product Control Division

PRODUCT REVISED
as complying with the Florida Building Code
Acceptance No 05-0926.03
Expiration Date 08/07/2008
By Helena A. Martin
Miami Dade Product Control Division

E. D. = EDGE DISTANCE (SEE SCHEDULE ON SHEETS 10 & 11 OF 15)

NOTE FOR COMBINATION OF SECTIONS :

WALL/FLOOR/CEILING MOUNTING SECTIONS CAN BE COMBINED IN ANY WAY TO SUIT ANY INSTALLATION.

+ +
SIDE WALK BOLTS ARE 3/4"øx3/32"THICK HEAD MACHINE SCREW W/LENGTH AS PER NOTES A.2 & B.2 (SHEET 1)
+ +
TRUSS HEAD BOLTS ARE 1/2"øx1/8"THICK HEAD MACHINE SCREW W/LENGTH AS PER NOTES A.2 & B.2 (SHEET 1)

F.B.C.(High Velocity Hurricane Zone)

SEP 15 2005

TILTECO INC.
TILLIT TESTING & ENGINEERING COMPANY
6355 N.W. 36th. St., Ste. 305, VIRGINIA GARDENS, FL 33166
Phone : (305)871-1530 . Fax : (305)871-1531
EB-0006719
WALTER A. TILLIT Jr. P. E.
FLORIDA Lic. # 44167

0.050" BERTHA ALUMINUM STORM PANEL

EASTERN METAL SUPPLY, INC.
4268 WESTROADS DR.
WEST PALM BEACH, FL 33407

REV. NO	DESCRIPTION	DATE	REV. No	DESCRIPTION	DATE
1	OLD 03-141	4/28/05	3	-	-
2	-	-	4	-	-

L.G.
DRAWN BY:

4/28/05
DATE

05-078
DRAWING No

SHEET 5 OF 15

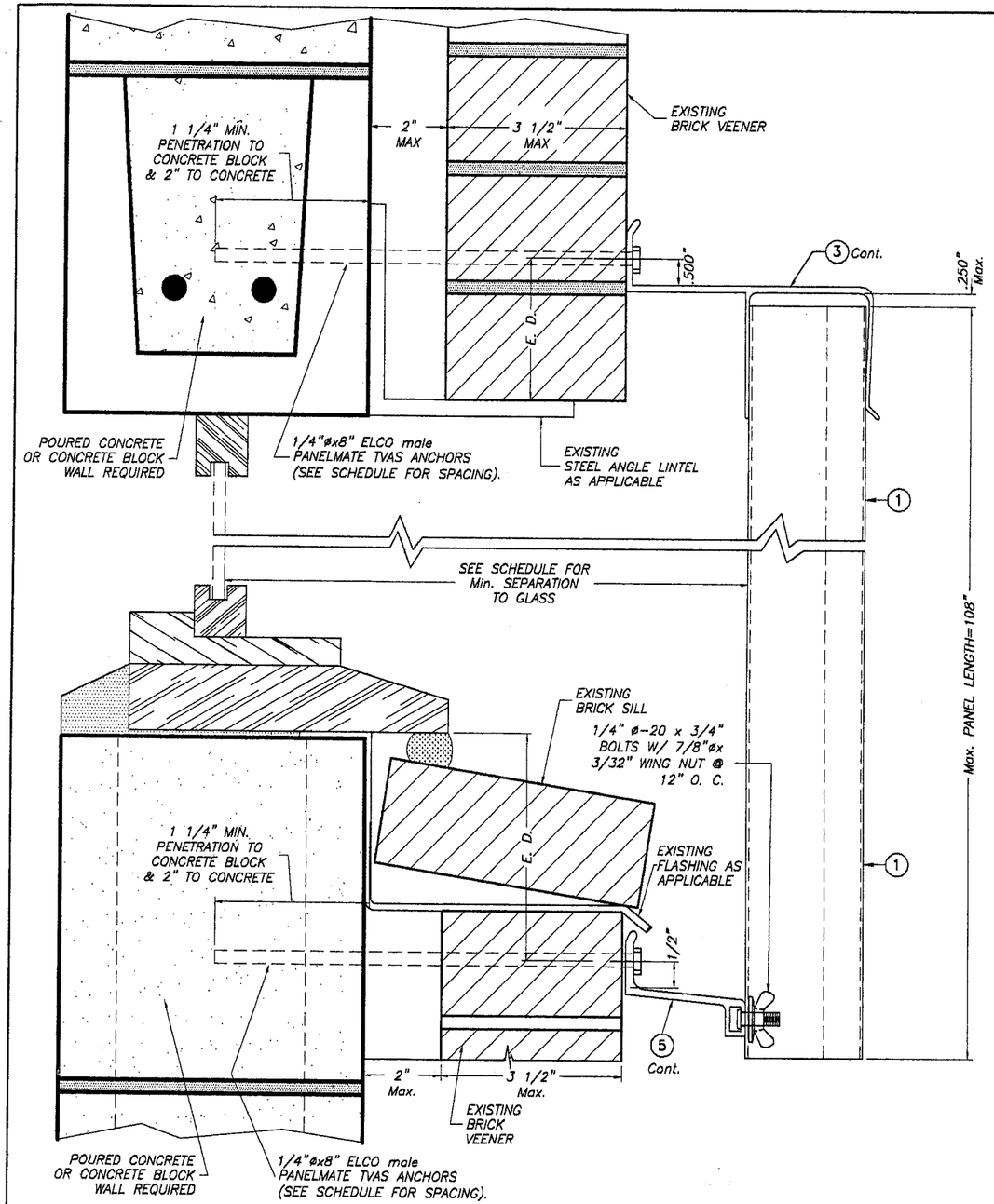

BUILD OUT INSTALLATION
SECTION 13

SCALE : 3/8" = 1"

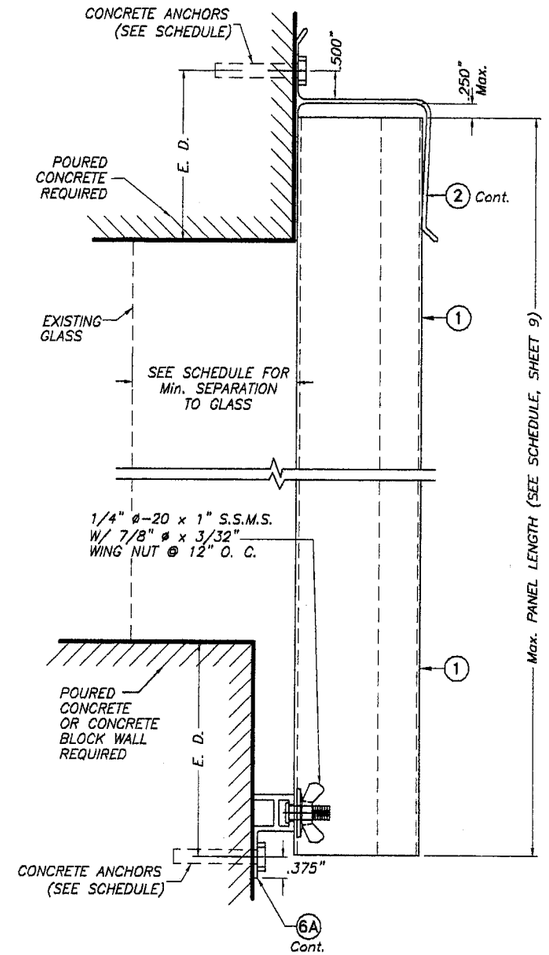

SECTION 14A

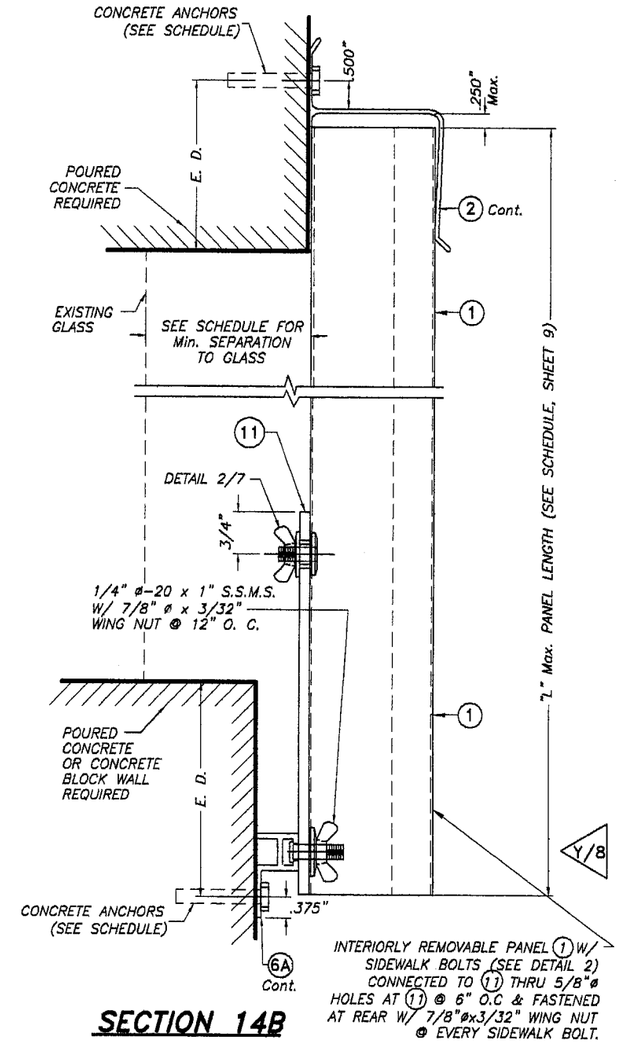

SECTION 14B

WALL MOUNTING INSTALLATIONS
SECTIONS 14

SCALE : 3/8" = 1"

INSTALLATIONS VALID FOR PANELS 1 USED JOINTLY WITH INTERIORLY REMOVABLE PANELS 1

PRODUCT RENEWED as complying with the Florida Building Code
Acceptance No. 08-0623.06
Expiration Date 08/07/2013
By Helmy A. Abdelsalam
Miami Dade Product Control Division

PRODUCT REVISED as complying with the Florida Building Code
Acceptance No. 05-0926.03
Expiration Date 08/07/2008
By Helmy A. Abdelsalam
Miami Dade Product Control Division

E. D. = EDGE DISTANCE (SEE SCHEDULE ON SHEETS 10 & 11 OF 15)

NOTE FOR COMBINATION OF SECTIONS :

WALL MOUNTING SECTIONS CAN BE COMBINED IN ANY WAY TO SUIT ANY INSTALLATION.

SEP 15 2005

F.B.C.(High Velocity Hurricane Zone)

TILTECO INC.
TILLIT TESTING & ENGINEERING COMPANY
6355 N.W. 36th. St., Ste. 305, VIRGINIA GARDENS, FL. 33166
Phone : (305)871-1530 . Fax : (305)871-1531
EB-0006719
WALTER A. TILLIT Jr. P. E.
FLORIDA Lic. # 44167

0.050" BERTHA ALUMINUM STORM PANEL

EASTERN METAL SUPPLY, INC.
4268 WESTROADS DR.
WEST PALM BEACH, FL 33407

REV. NO	DESCRIPTION	DATE	REV. No	DESCRIPTION	DATE
1	OLD 03-141	4/28/05	3	-	-
2	-	-	4	-	-

L.G. DRAWN BY:
4/28/05 DATE
05-078 DRAWING No
SHEET 6 OF 15

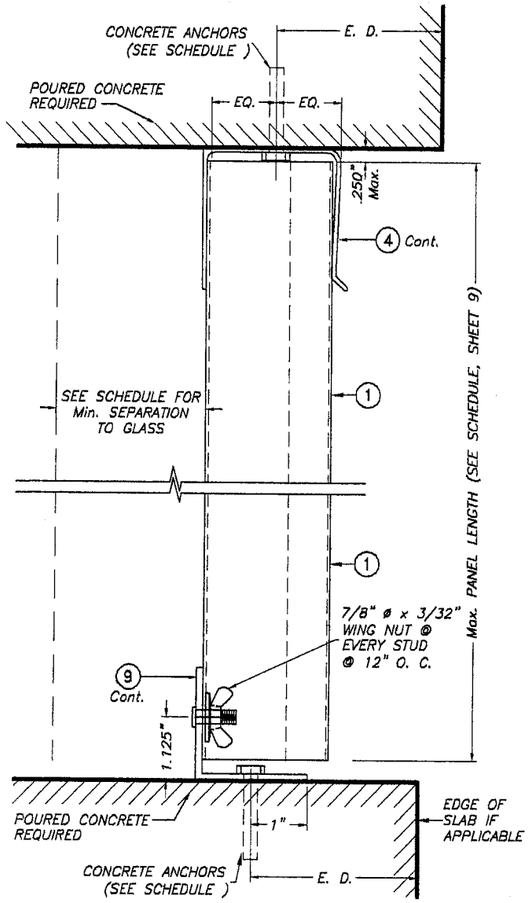

SECTION 15A

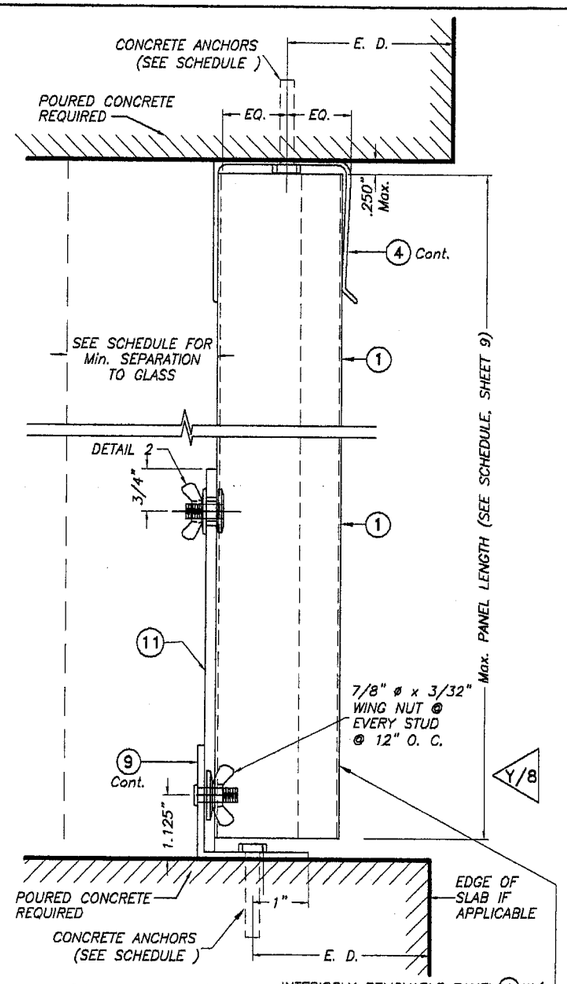

SECTION 15B

INTERIORLY REMOVABLE PANEL (1) W/ SIDEWALK BOLTS (SEE DETAIL 2) CONNECTED TO (11) THRU 5/8"ø HOLES AT (11) @ 6" O.C & FASTENED AT REAR W/ 7/8"øx3/32" WING NUT @ EVERY SIDEWALK BOLT.

SECTIONS 15

CEILING & FLOOR MOUNTING INSTALLATIONS

SCALE : 3/8" = 1"

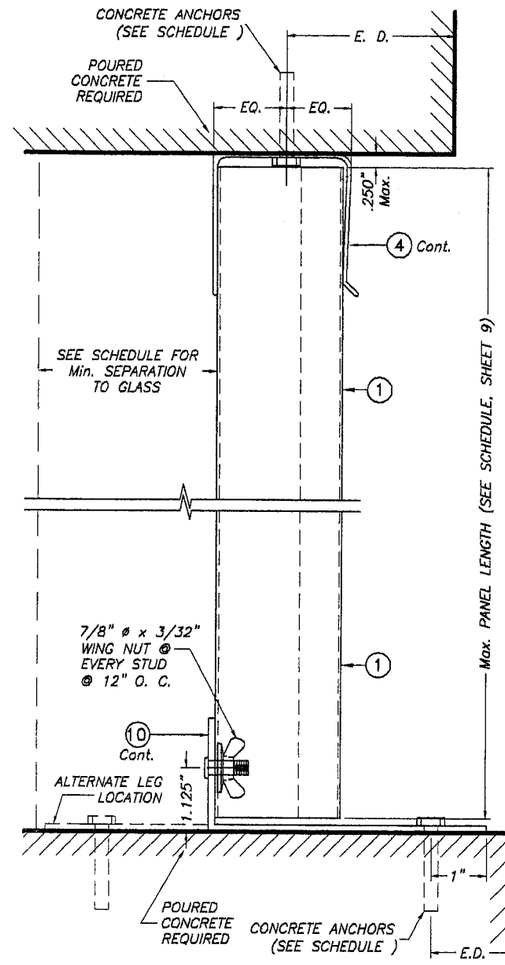

SECTION 16A

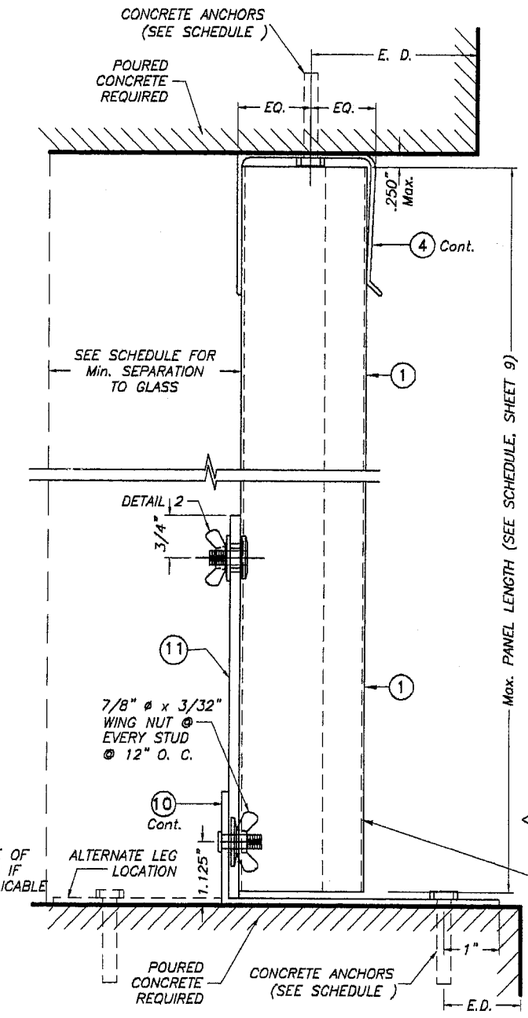

SECTION 16B

INTERIORLY REMOVABLE PANEL (1) W/ SIDEWALK BOLTS (SEE DETAIL 2) CONNECTED TO (11) THRU 5/8"ø HOLES AT (11) @ 6" O.C & FASTENED AT REAR W/ 7/8"øx3/32" WING NUT @ EVERY SIDEWALK BOLT.

CEILING & FLOOR MOUNTING INSTALLATIONS

SECTIONS 16

SCALE : 3/8" = 1"

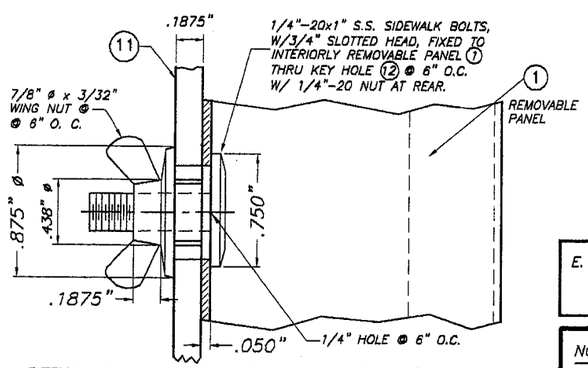

DETAIL 2 - INSTALLATION OF 1/4"x1" SIDEWALK BOLTS @ REMOVABLE PANEL

SCALE: 1" = 1"

INSTALLATIONS VALID FOR PANELS (1) USED JOINTLY WITH INTERIORLY REMOVABLE PANELS (1)

E. D. = EDGE DISTANCE (SEE SCHEDULE ON SHEET 10 & 11 OF 15)

NOTE FOR COMBINATION OF SECTIONS :

FLOOR/CEILING MOUNTING SECTIONS CAN BE COMBINED IN ANY WAY TO SUIT ANY INSTALLATION.

PRODUCT RENEWED
as complying with the Florida Building Code
Acceptance No 08-0623.06
Expiration Date 08/07/2013
By
Miami Dade Product Control Division

PRODUCT REVISED
as complying with the Florida Building Code
Acceptance No 05-0926.03
Expiration Date 08/07/2008
By
Miami Dade Product Control Division

F.B.C.(High Velocity Hurricane Zone)

SEP 15 2005

TILTECO INC.
TILLIT TESTING & ENGINEERING COMPANY
6355 N.W. 36th. St., Ste. 305, VIRGINIA GARDENS, FL 33166
Phone : (305)871-1530 . Fax : (305)871-1531
EB-0006719
WALTER A. TILLIT Jr. P. E.
FLORIDA Lic. # 44167

0.050" BERTHA ALUMINUM STORM PANEL

EASTERN METAL SUPPLY, INC.
4268 WESTROADS DR.
WEST PALM BEACH, FL 33407

REV. NO	DESCRIPTION	DATE	REV. No	DESCRIPTION	DATE
1	OLD 03-141	4/28/05	3	-	-
2	-	-	4	-	-

L.G.
DRAWN BY:

4/28/05
DATE

05-078
DRAWING No

SHEET 7 OF 15

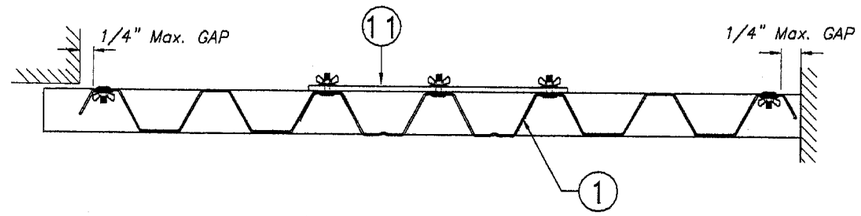

SECTION B–B

SCALE : 1/8" = 1"

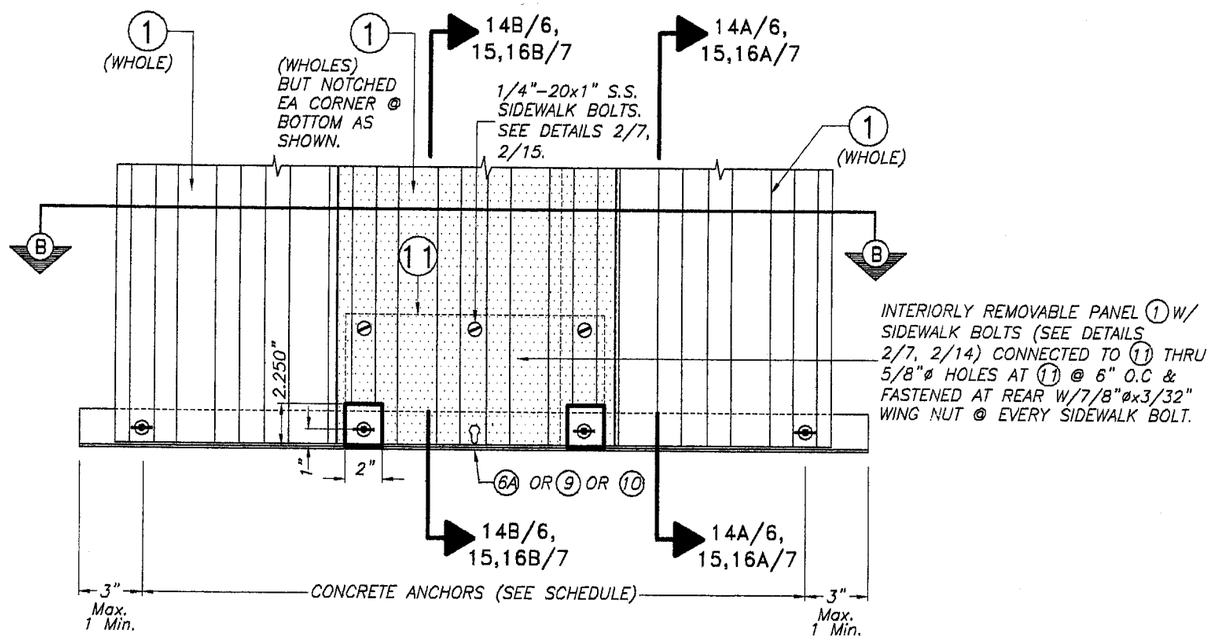

INTERIORLY REMOVABLE STORM PANEL PARTIAL ELEVATION Y

SCALE : 1/8" = 1"

PRODUCT RENEWED
as complying with the Florida Building Code
Acceptance No 08-0623.06
Expiration Date 08/07/2013
By Helena A. Alvarez
Miami Dade Product Control Division

PRODUCT REVISED
as complying with the Florida Building Code
Acceptance No 05-0926.03
Expiration Date 08/07/2008
By Helena A. Alvarez
Miami Dade Product Control Division

F.B.C.(High Velocity Hurricane Zone)

SEP 15 2005

TILTECO INC.
TILLIT TESTING & ENGINEERING COMPANY
6355 N.W. 36th. St., Ste. 305, VIRGINIA GARDENS, Fl. 33166
Phone : (305)871–1530 . Fax : (305)871–1531
EB–0006719
WALTER A. TILLIT Jr. P. E.
FLORIDA Lic. # 44167

0.050" BERTHA ALUMINUM STORM PANEL

EASTERN METAL SUPPLY, INC.
4268 WESTROADS DR.
WEST PALM BEACH, FL 33407

REV. NO	DESCRIPTION	DATE	REV. No	DESCRIPTION	DATE
1	OLD 03–141	4/28/05	3	–	–
2	–	–	4	–	–

L.G.
DRAWN BY:

4/28/05
DATE

05–078
DRAWING No

SHEET 8 OF 15

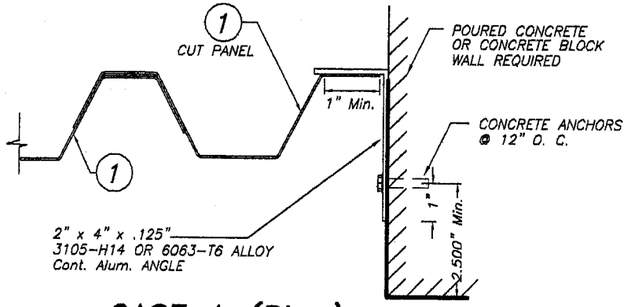

CASE A (Plan)

SCALE: 1/4" = 1"

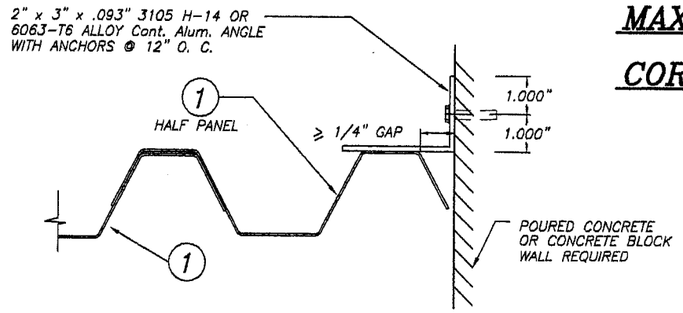

CASE D (Plan)

SCALE: 1/4" = 1"

MAXIMUM DESIGN PRESSURE RATING "W" (p.s.f.) AND CORRESPONDING MAXIMUM PANEL LENGTH "L" SCHEDULE

MAXIMUM DESIGN PRESSURE RATING W (p.s.f.)	Max. PANEL LENGTH L (ft.) (SEE SECTIONS)	MINIMUM SEPARATION TO GLASS	APPLICABLE TO SECTIONS # & ANY COMBINATION OF THEM
+65.0, -77.0	8'-0" OR LESS	2 1/4"	1 THRU 8
+65.0, -77.0	9'-0" OR LESS	3 11/16"	1 THRU 8
+65.0, -72.0	9'-0" OR LESS	3 1/2"	11
+62.0, -73.3	10'-0" OR LESS	3 7/8"	2, 6, 7 & 8
+63.5, -63.5	9'-0" OR LESS	3 1/2"	9, 14, 10
+65.0, -65.0	9'-0" OR LESS	3 1/2"	12, 15, 16
+63.5, -63.5	9'-0" OR LESS	3 3/4"	13

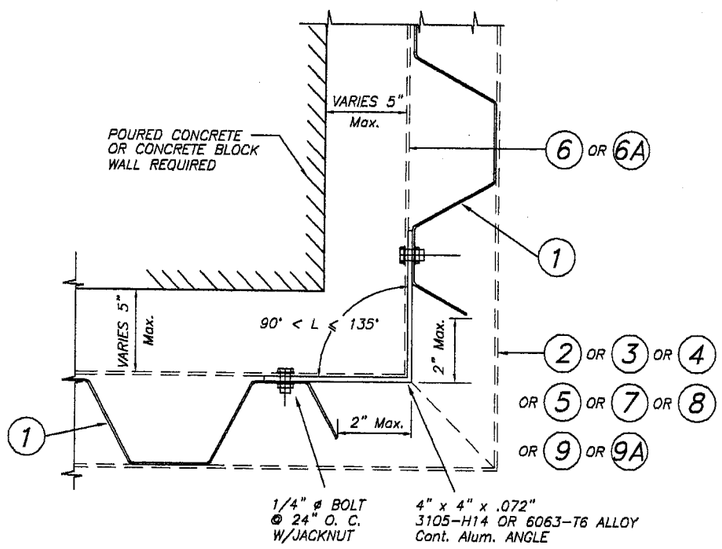

CASE B (Plan)

SCALE: 1/4" = 1"

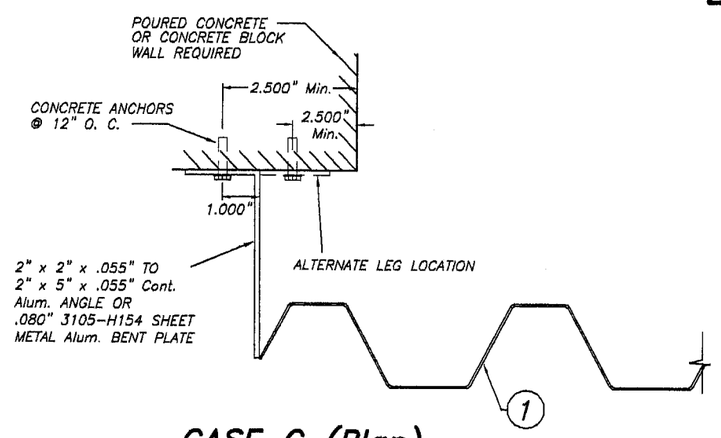

CASE C (Plan)

SCALE: 1/4" = 1"

PRODUCT RENEWED
as complying with the Florida
Building Code
Acceptance No 08-0623.06
Expiration Date 08/07/2013
By
Miami Dade Product Control
Division

PRODUCT REVISED
as complying with the Florida
Building Code
Acceptance No 05-0926.03
Expiration Date 08/07/2008
By
Miami Dade Product Control
Division

END CLOSURES DETAILS

F.B.C.(High Velocity Hurricane Zone)

SEP 15 2005

TILTECO INC.
TILLIT TESTING & ENGINEERING COMPANY
6355 N.W. 36th. St., Ste. 305, VIRGINIA GARDENS, FL. 33166
Phone : (305)871-1530 . Fax : (305)871-1531
EB-0006719
WALTER A. TILLIT Jr. P. E.
FLORIDA Lic. # 44167

0.050" BERTHA ALUMINUM STORM PANEL

EASTERN METAL SUPPLY, INC.
4268 WESTROADS DR.
WEST PALM BEACH, FL 33407

L.G.
DRAWN BY:

4/28/05
DATE

05-078
DRAWING No

SHEET 9 OF 15

REV. NO	DESCRIPTION	DATE	REV. No	DESCRIPTION	DATE
1	OLD 03-141	4/28/05	3	-	-
2	-	-	4	-	-

MAXIMUM DESIGN PRESSURE RATING "W" (p.s.f.) AND CORRESPONDING MAXIMUM ANCHOR SPACING SCHEDULE FOR INSTALLATIONS IN CONCRETE AND CONCRETE BLOCK STRUCTURES

MAXIMUM DESIGN LOAD W (p.s.f.)	MAXIMUM ANCHORS SPACING FOR E. D. = 3 1/2" *																		APPLICABLE TO SECTIONS # & ANY COMBINATION OF THEM	MAXIMUM PANEL LENGTH "L" (ft.)
	REGULAR TAPCONS		CRETE-FLEX SS4		ZAMAC NAILIN		CALK-IN		SOLID-SET		CF TAP-GRIP		PANELMATES		PANELMATE PLUS		410 S.S. TAPCON			
	TO CONCRETE	TO MASONRY	TO CONCRETE	TO MASONRY	TO CONCRETE	TO MASONRY	TO CONCRETE	TO MASONRY	TO CONCRETE	TO MASONRY	TO CONCRETE	TO MASONRY	TO CONCRETE	TO MASONRY	TO CONCRETE	TO MASONRY	TO CONCRETE	TO MASONRY		
+63.5, -63.5	8"	N/A	N/A	N/A	4"	N/A	8"	N/A	N/A	N/A	5"	N/A	3 1/2"	N/A	N/A	N/A	N/A	N/A	1 (TOP)	9'-0" OR LESS
	12"	6"	N/A	N/A	10"	7 1/2"	12"	9"	N/A	N/A	12"	7"	11"	11"	12"	7 1/2"	N/A	N/A	1 (BOTTOM)	
	12"	N/A	N/A	N/A	10"	N/A	12"	N/A	N/A	N/A	12"	N/A	11"	N/A	N/A	N/A	N/A	N/A	2 (TOP)	
	12"	6"	N/A	N/A	10"	7 1/2"	12"	9"	N/A	N/A	12"	8"	11"	11"	12"	7 1/2"	N/A	N/A	2 (BOTTOM)	
	12"	N/A	N/A	N/A	10"	N/A	12"	N/A	N/A	N/A	12"	N/A	11"	N/A	N/A	N/A	N/A	N/A	3 (TOP)	
	12"	6"	N/A	N/A	10"	7 1/2"	12"	9"	N/A	N/A	12"	8"	11"	11"	12"	7 1/2"	N/A	N/A	3 (BOTTOM)	
	12"	N/A	N/A	N/A	10"	N/A	12"	N/A	N/A	N/A	12"	N/A	11"	N/A	N/A	N/A	N/A	N/A	4 (TOP)	
	12"	6"	N/A	N/A	10"	7 1/2"	12"	9"	N/A	N/A	12"	8"	11"	11"	12"	7 1/2"	N/A	N/A	4 (BOTTOM)	
	12"	N/A	N/A	N/A	10"	N/A	12"	N/A	N/A	N/A	12"	N/A	11"	N/A	N/A	N/A	N/A	N/A	5 (TOP)	
	12"	6"	N/A	N/A	10"	7 1/2"	12"	9"	N/A	N/A	12"	8"	11"	11"	12"	7 1/2"	N/A	N/A	5 (BOTTOM)	
	8 1/2"	N/A	12"	N/A	5 1/2"	N/A	7 1/2"	N/A	N/A	N/A	8 1/2"	N/A	11 1/2"	N/A	11"	N/A	9 1/2"	N/A	6 (TOP)	
	8 1/2"	N/A	12"	N/A	5 1/2"	N/A	7 1/2"	N/A	10 1/2"	N/A	8 1/2"	N/A	11 1/2"	N/A	11"	N/A	9 1/2"	N/A	6 (BOTTOM)	
	7 1/2"	N/A	11 1/2"	N/A	5"	N/A	7"	N/A	10 1/2"	N/A	7"	N/A	10 1/2"	N/A	10"	N/A	8 1/2"	N/A	7 (TOP/BOTTOM)	
	N/A	N/A	N/A	N/A	N/A	N/A	12"	6"	12"	12"	12"	6"	6"	6"	12"	12"	N/A	N/A	8 (TOP/BOTTOM) *	
	12"	N/A	12"	N/A	N/A	N/A	12"	N/A	N/A	N/A	N/A	N/A	12"	N/A	12"	N/A	12"	N/A	9 (TOP)	
	12"	6"	12"	12"	N/A	N/A	12"	9"	N/A	N/A	N/A	N/A	12"	11"	12"	7 1/2"	12"	7 1/2"	9 (BOTTOM)	
	N/A	N/A	N/A	N/A	N/A	N/A	12"	6"	12"	12"	N/A	N/A	12"	6"	12"	6"	N/A	N/A	10 (TOP) 11 (TOP/BOTTOM) *	
	12"	6"	12"	12"	N/A	N/A	12"	9"	N/A	N/A	N/A	N/A	12"	10"	12"	7 1/2"	12"	7 1/2"	10 (BOTTOM)	
	N/A	N/A	N/A	N/A	N/A	N/A	N/A	N/A	N/A	N/A	N/A	N/A	12"	11"	N/A	N/A	N/A	N/A	13 (TOP)	
	N/A	N/A	N/A	N/A	N/A	N/A	N/A	N/A	N/A	N/A	N/A	N/A	12"	6"	N/A	N/A	N/A	N/A	13 (BOTTOM)	
	12"	N/A	12"	N/A	N/A	N/A	12"	N/A	N/A	N/A	N/A	N/A	12"	N/A	12"	N/A	12"	N/A	14 (TOP)	
	12"	6"	12"	12"	N/A	N/A	12"	9"	N/A	N/A	N/A	N/A	12"	11"	12"	7 1/2"	12"	7 1/2"	14A (BOTTOM)	
	12"	4 1/2"	12"	9"	N/A	N/A	12"	6 1/2"	N/A	N/A	N/A	N/A	12"	8"	12"	5 1/2"	12"	5 1/2"	14B (BOTTOM)	
	11 1/2"	N/A	12"	N/A	N/A	N/A	12"	N/A	N/A	N/A	N/A	N/A	12"	N/A	12"	N/A	12"	N/A	12 (TOP)	
	8 1/2"	N/A	12"	N/A	N/A	N/A	7 1/2"	N/A	10 1/2"	N/A	N/A	N/A	11 1/2"	N/A	11"	N/A	9 1/2"	N/A	12 (BOTTOM)	
	11 1/2"	N/A	12"	N/A	N/A	N/A	12"	N/A	N/A	N/A	N/A	N/A	12"	N/A	12"	N/A	12"	N/A	15 (TOP)	
	8 1/2"	N/A	12"	N/A	N/A	N/A	7 1/2"	N/A	N/A	N/A	N/A	N/A	11 1/2"	N/A	11"	N/A	9 1/2"	N/A	15A (BOTTOM)	
	N/A	N/A	3 1/2"	N/A	N/A	N/A	N/A	N/A	N/A	N/A	N/A	N/A	3"	N/A	3"	N/A	3"	N/A	15B (BOTTOM)	
	11 1/2"	N/A	12"	N/A	N/A	N/A	12"	N/A	N/A	N/A	N/A	N/A	12"	N/A	12"	N/A	12"	N/A	16 (TOP)	
	8 1/2"	N/A	12"	N/A	N/A	N/A	7 1/2"	N/A	N/A	N/A	N/A	N/A	11 1/2"	N/A	11"	N/A	9 1/2"	N/A	16A (BOTTOM)	
	3"	N/A	4 1/2"	N/A	N/A	N/A	3"	N/A	N/A	N/A	N/A	N/A	4"	N/A	4"	N/A	4"	N/A	16B (BOTTOM)	
+85.0, -65.0	6"	N/A	N/A	N/A	6"	N/A	6"	N/A	N/A	N/A	6"	N/A	6"	N/A	N/A	N/A	N/A	N/A	2 (TOP)	9'-0" TO 10'-0"
	6"	5 1/2"	N/A	N/A	6"	6"	6"	6"	N/A	N/A	6"	6"	6"	6"	N/A	N/A	N/A	N/A	2 (BOTTOM)	
	6"	N/A	N/A	N/A	4 1/2"	N/A	6"	N/A	N/A	N/A	6"	N/A	5 1/2"	N/A	N/A	N/A	N/A	N/A	6 (TOP)	
	6"	N/A	N/A	N/A	4 1/2"	N/A	6"	N/A	9 1/2"	N/A	6"	N/A	5 1/2"	N/A	N/A	N/A	N/A	N/A	6 (BOTTOM)	
	6"	N/A	N/A	N/A	4"	N/A	6"	N/A	9 1/2"	N/A	6"	N/A	4 1/2"	N/A	N/A	N/A	N/A	N/A	7 (TOP/BOTTOM)	
	N/A	N/A	N/A	N/A	N/A	N/A	6"	6"	12"	12"	6"	6"	6"	6"	N/A	N/A	N/A	N/A	8 (TOP/BOTTOM) *	

E. D. = EDGE DISTANCE

ANCHORS LEGEND

ANCHOR TYPE	Min. ANCHOR SPACING
REGULAR TAPCON, 410 S.S. TAPCON, CRETE-FLEX SS4, ZAMAC NAILING, CF TAP-GRIP, PANELMATE OR PANELMATE PLUS.	3.0"
CALK-IN	2.5"
SOLID-SET	3.5"

* MAXIMUM ANCHOR SPACINGS ARE VALID FOR 3 1/2" EDGE DISTANCE. FOR E. D. LESS THAN 3 1/2", REDUCE ANCHOR SPACING BY MULTIPLYING SPACING SHOWN ON SCHEDULE BY THE FOLLOWING FACTORS. (NOTE: Min. E. D. FOR CALK-IN ANCHORS IS 2 1/2")
FOR THIS OPERATION TO BE POSIBLE, REDUCED SPACING OBTAINED USING FACTOR SHALL NOT BE LESS THAN MINIMUM SPACING INDICATED FOR EACH ANCHOR TYPE AT ANCHORS LEGEND.

ACTUAL E. D.	FACTOR			
	REGULAR TAPCON, 410 S.S. TAPCON, CRETE-FLEX SS4, ZAMAC NAILING, PANELMATE OR PANELMATE PLUS.	CALK-IN	SOLID-SET	CF TAP-GRIP
3"	.86	.75	.78	1.00
2 1/2"	.71	.50	–	.80
2"	.50	–	–	–

PRODUCT RENEWED
as complying with the Florida Building Code
Acceptance No 08-0623.06
Expiration Date 08/07/2013
By [signature]
Miami Dade Product Control Division

PRODUCT REVISED
as complying with the Florida Building Code
Acceptance No 05-0926.03
Expiration Date 08/07/2008
By [signature]
Miami Dade Product Control Division

F.B.C.(High Velocity Hurricane Zone)

SEP 15 2005

TILTECO INC.
TILLIT TESTING & ENGINEERING COMPANY
6355 N.W. 36th. St., Ste. 305, VIRGINIA GARDENS, Fl. 33166
Phone : (305)871-1530 . Fax : (305)871-1531
EB-0006719
WALTER A. TILLIT Jr. P. E.
FLORIDA Lic. # 44167

0.050" BERTHA ALUMINUM STORM PANEL

EASTERN METAL SUPPLY, INC.
4268 WESTROADS DR.
WEST PALM BEACH, FL 33407

REV. NO	DESCRIPTION	DATE	REV. No	DESCRIPTION	DATE
1	OLD 03-141	4/28/05	3	–	–
2	–	–	4	–	–

L.G.
DRAWN BY:
4/28/05
DATE
05-078
DRAWING No
SHEET 10 OF 15

MAXIMUM DESIGN PRESSURE RATING "W" (p.s.f.) AND CORRESPONDING MAXIMUM ANCHOR SPACING SCHEDULE FOR INSTALLATIONS INTO CONCRETE AND CONCRETE BLOCK STRUCTURES

MAXIMUM DESIGN LOAD W (p.s.f.)	MAXIMUM ANCHORS SPACING FOR E. D. = 3 1/2" *																		APPLICABLE TO SECTIONS # & ANY COMBINATION OF THEM	MAXIMUM PANEL LENGTH "L" (ft.)
	REGULAR TAPCONS		CRETE-FLEX SS4		ZAMAC NAILIN		CALK-IN		SOLID-SET		CF TAP-GRIP		PANELMATES		PANELMATE PLUS		410 S.S. TAPCON			
	TO CONCRETE	TO MASONRY	TO CONCRETE	TO MASONRY	TO CONCRETE	TO MASONRY	TO CONCRETE	TO MASONRY	TO CONCRETE	TO MASONRY	TO CONCRETE	TO MASONRY	TO CONCRETE	TO MASONRY	TO CONCRETE	TO MASONRY	TO CONCRETE	TO MASONRY		
+65.0, -77.0	6"	N/A	N/A	N/A	3"	N/A	6"	N/A	N/A	N/A	3 1/2"	N/A	2 1/2"	N/A	N/A	N/A	N/A	N/A	1 (TOP)	9'-0" OR LESS
	12"	5"	N/A	N/A	10"	6"	12"	7 1/2"	N/A	N/A	12"	6"	9 1/2"	9 1/2"	N/A	N/A	N/A	N/A	1 (BOTTOM)	
	12"	N/A	N/A	N/A	10"	N/A	12"	N/A	N/A	N/A	12"	N/A	9 1/2"	N/A	N/A	N/A	N/A	N/A	2 (TOP)	
	12"	5"	N/A	N/A	10"	6"	12"	7 1/2"	N/A	N/A	12"	6 1/2"	9 1/2"	9"	N/A	N/A	N/A	N/A	2 (BOTTOM)	
	12"	N/A	N/A	N/A	10"	N/A	12"	N/A	N/A	N/A	12"	N/A	9 1/2"	N/A	N/A	N/A	N/A	N/A	3 (TOP)	
	12"	5"	N/A	N/A	8"	6"	12"	7 1/2"	N/A	N/A	12"	6 1/2"	9 1/2"	9"	N/A	N/A	N/A	N/A	3 (BOTTOM)	
	12"	N/A	N/A	N/A	10"	N/A	12"	N/A	N/A	N/A	12"	N/A	9 1/2"	N/A	N/A	N/A	N/A	N/A	4 (TOP)	
	12"	5"	N/A	N/A	8"	6"	12"	7 1/2"	N/A	N/A	12"	6 1/2"	9 1/2"	9"	N/A	N/A	N/A	N/A	4 (BOTTOM)	
	12"	N/A	N/A	N/A	8"	N/A	12"	N/A	N/A	N/A	12"	N/A	9 1/2"	N/A	N/A	N/A	N/A	N/A	5 (TOP)	
	12"	4 1/2"	N/A	N/A	7"	5"	12"	6"	N/A	N/A	10"	5"	7 1/2"	7 1/2"	N/A	N/A	N/A	N/A	5 (BOTTOM)	
	7"	N/A	N/A	N/A	4 1/2"	N/A	6"	N/A	N/A	N/A	7"	N/A	5"	N/A	N/A	N/A	N/A	N/A	6 (TOP)	
	7"	N/A	N/A	N/A	4 1/2"	N/A	6"	N/A	9"	N/A	7"	N/A	5"	N/A	N/A	N/A	N/A	N/A	6 (BOTTOM)	
	6"	N/A	N/A	N/A	4"	N/A	5 1/2"	N/A	9"	N/A	6"	N/A	4 1/2"	N/A	N/A	N/A	N/A	N/A	7 (TOP/BOTTOM)	
	N/A	N/A	N/A	N/A	N/A	N/A	12"	6"	12"	12"	12"	6"	6"	6"	N/A	N/A	N/A	N/A	8 (TOP/BOTTOM)	
+65.0, -72.0	6 1/2"	N/A	12"	N/A	N/A	N/A	6"	N/A	9 1/2"	N/A	N/A	N/A	9"	N/A	9"	N/A	7 1/2"	N/A	7 (TOP/BOTTOM)	9'-0" OR LESS
	N/A	N/A	N/A	N/A	N/A	N/A	12"	6"	12"	12"	N/A	N/A	12"	6"	12"	6"	N/A	N/A	11 (TOP)	
	12"	5 1/2"	12"	10 1/2"	N/A	N/A	12"	8"	12"	12"	N/A	N/A	12"	9 1/2"	12"	6 1/2"	12"	7"	11 (BOTTOM)	
+62.0, -73.3	6"	N/A	N/A	N/A	6"	N/A	6"	N/A	12"	12"	6"	N/A	6"	N/A	N/A	N/A	N/A	N/A	2 (TOP)	9'-0" TO 10'-0" *
	6"	5"	N/A	N/A	6"	5 1/2"	6"	6"	N/A	N/A	6"	6"	6"	6"	N/A	N/A	N/A	N/A	2 (BOTTOM)	
	6"	N/A	N/A	N/A	4"	N/A	6"	N/A	N/A	N/A	6"	N/A	5"	N/A	N/A	N/A	N/A	N/A	6 (TOP)	
	6"	N/A	N/A	N/A	4"	N/A	6"	N/A	8"	N/A	6"	N/A	5"	N/A	N/A	N/A	N/A	N/A	6 (BOTTOM)	
	6"	N/A	N/A	N/A	5"	N/A	6"	N/A	8"	N/A	5 1/2"	N/A	4"	N/A	N/A	N/A	N/A	N/A	7 (TOP/BOTTOM)	
	N/A	N/A	N/A	N/A	N/A	N/A	6"	6"	12"	12"	6"	6"	6"	6"	N/A	N/A	N/A	N/A	8 (TOP/BOTTOM)	
	N/A	N/A	N/A	N/A	N/A	N/A	N/A	N/A	12"	12"	N/A	N/A	N/A	N/A	N/A	N/A	N/A	N/A	1 (BOTTOM) 10 (TOP) 11 (TOP/BOTTOM)	

E. D. = EDGE DISTANCE

PRODUCT RENEWED
as complying with the Florida Building Code
Acceptance No. 08-0623.06
Expiration Date 08/07/2013
By Helena A. Melo
Miami Dade Product Control Division

PRODUCT REVISED
as complying with the Florida Building Code
Acceptance No. 05-0926.03
Expiration Date 08/07/2008
By Helena A. Melo
Miami Dade Product Control Division

* MAXIMUM ANCHOR SPACINGS ARE VALID FOR 3 1/2" EDGE DISTANCE. FOR E. D. LESS THAN 3 1/2", REDUCE ANCHOR SPACING BY MULTIPLYING SPACING SHOWN ON SCHEDULE BY THE FOLLOWING FACTORS. (NOTE: Min. E. D. FOR CALK-IN ANCHORS IS 2 1/2")
FOR THIS OPERATION TO BE POSIBLE, REDUCED SPACING OBTAINED USING FACTOR SHALL NOT BE LESS THAN MINIMUM SPACING INDICATED FOR EACH ANCHOR TYPE AT ANCHORS LEGEND.

ACTUAL E. D.	FACTOR			
	REGULAR TAPCON, 410 S.S. TAPCON, CRETE-FLEX SS4, ZAMAC NAILING, PANELMATE OR PANELMATE PLUS.	CALK-IN	SOLID-SET	CF TAP-GRIP
3"	.86	.75	.78	1.00
2 1/2"	.71	.50	–	.80
2"	.50	–	–	–

ANCHORS LEGEND

ANCHOR TYPE	Min. ANCHOR SPACING
REGULAR TAPCON, 410 S.S. TAPCON, CRETE-FLEX SS4, ZAMAC NAILING, CF TAP-GRIP, PANELMATE OR PANELMATE PLUS.	3.0"
CALK-IN	2.5"
SOLID-SET	3.5"

SEP 15 2005

F.B.C.(High Velocity Hurricane Zone)

TILTECO INC.
TILLIT TESTING & ENGINEERING COMPANY
6355 N.W. 36th. St., Ste. 305, VIRGINIA GARDENS, Fl. 33166
Phone : (305)871-1530 . Fax : (305)871-1531
EB-0006719
WALTER A. TILLIT Jr. P. E.
FLORIDA Lic. # 44167

0.050" BERTHA ALUMINUM STORM PANEL

EASTERN METAL SUPPLY, INC.
4268 WESTROADS DR.
WEST PALM BEACH, FL 33407

REV. NO	DESCRIPTION	DATE	REV. No	DESCRIPTION	DATE
1	OLD 03-141	4/28/05	3	–	–
2	–	–	4	–	–

L.G.
DRAWN BY:
4/28/05
DATE
05-078
DRAWING No
SHEET 11 OF 15

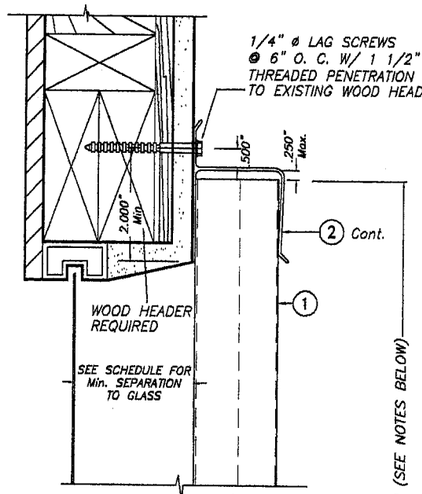

ALTERNATIVE 1

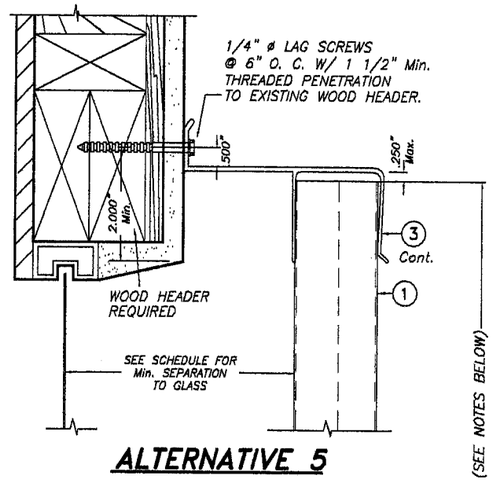

ALTERNATIVE 5

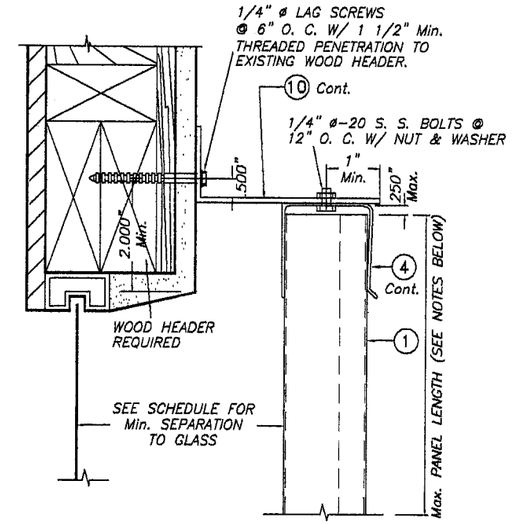

ALTERNATIVE 7

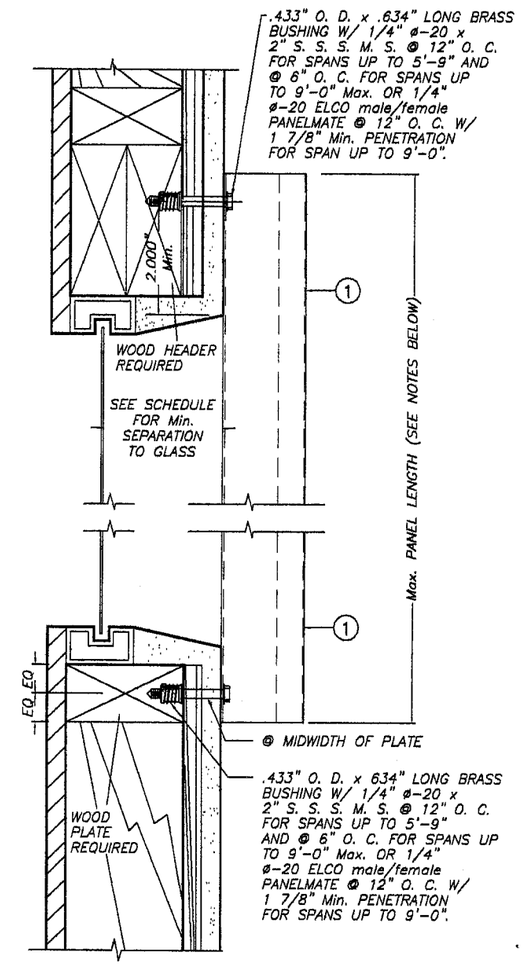

ALTERNATIVE 8

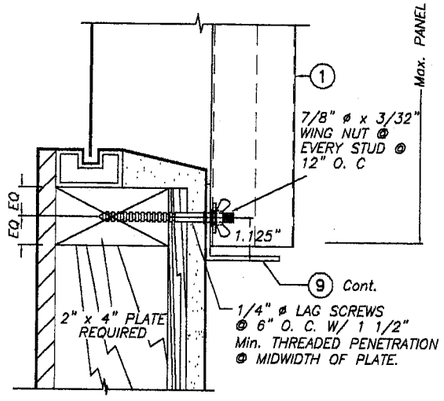

ALTERNATIVE 2

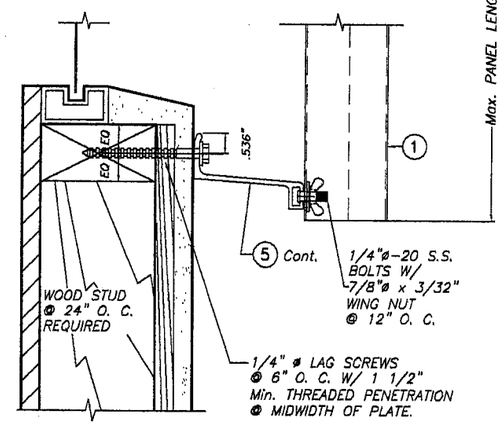

ALTERNATIVE 6

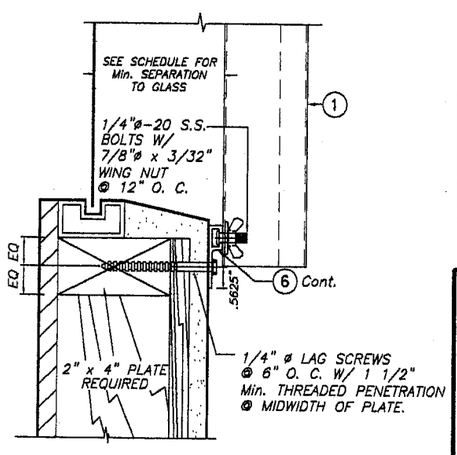

ALTERNATIVE 3

PRODUCT RENEWED
as complying with the Florida Building Code
Acceptance No 08-0623.06
Expiration Date 08/07/2013
By Helena A. Melo
Miami Dade Product Control Division

PRODUCT REVISED
as complying with the Florida Building Code
Acceptance No 05-0926.03
Expiration Date 08/07/2008
By Helena A. Melo
Miami Dade Product Control Division

WALL MOUNTING INSTALLATIONS

SECTIONS A

SCALE : 1/4" = 1"

NOTE FOR COMBINATION OF SECTIONS:

WALL MOUNTING SECTIONS CAN BE COMBINED IN ANY WAY TO SUIT ANY INSTALLATION.

INSTALLATION DETAILS ON EXISTING WOOD BUILDINGS

NOTES:

1. INSTALLATIONS ARE ONLY VALID FOR DESIGN WIND LOADS UP TO +65.0, −72.0 psf AND PANEL'S LENGTHS UP TO 9'−0", EXCEPT AS NOTED.
2. NEW 2" x 6" P. T. TO BE SOUTHERN PINE No. 2, SURFACED DRY WITH 19 % M. M. C. W/ SPECIFIC DENSITY OF 0.55.
3. FOR NEW WOOD FRAME CONSTRUCTION: WOOD MEMBERS TO BE SOUTHERN PINE No. 2, W/ SPECIFIC DENSITY OF 0.55 OR EQUAL.

SEP 15 2005

F.B.C.(High Velocity Hurricane Zone)

TILTECO INC.
TILLIT TESTING & ENGINEERING COMPANY
6355 N.W. 36th. St., Ste. 305, VIRGINIA GARDENS, FL. 33166
Phone : (305)871-1530 . Fax : (305)871-1531
EB-0006719
WALTER A. TILLIT Jr. P. E.
FLORIDA Lic. # 44167

0.050" BERTHA ALUMINUM STORM PANEL

EASTERN METAL SUPPLY, INC.
4268 WESTROADS DR.
WEST PALM BEACH, FL 33407

REV. NO	DESCRIPTION	DATE	REV. No	DESCRIPTION	DATE
1	OLD 03-141	4/28/05	3	–	–
2	–	–	4	–	–

L.G.
DRAWN BY:

4/28/05
DATE

05-078
DRAWING No

SHEET 12 OF 15

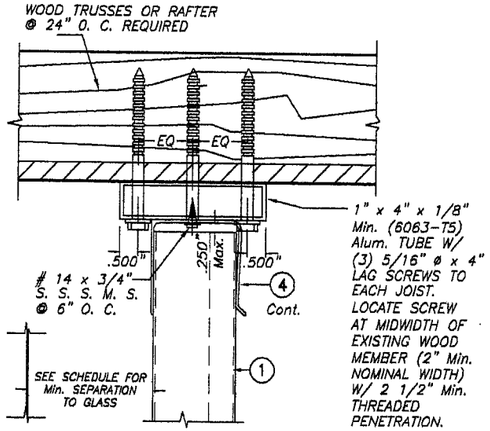

ALTERNATIVE 9A

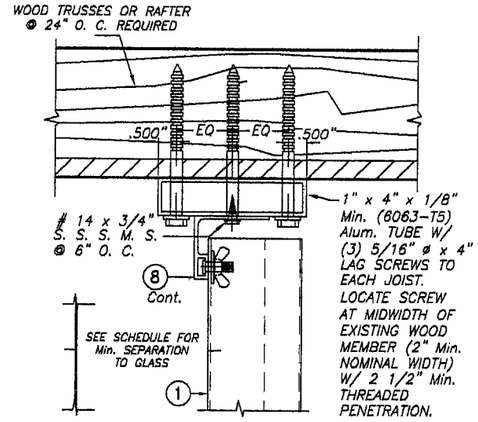

ALTERNATIVE 10

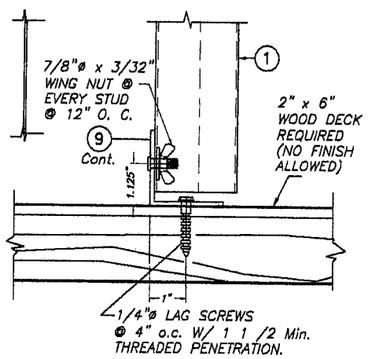

ALTERNATIVE 9

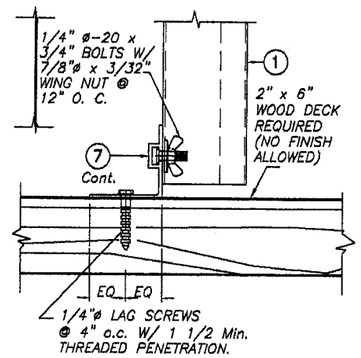

ALTERNATIVE 11

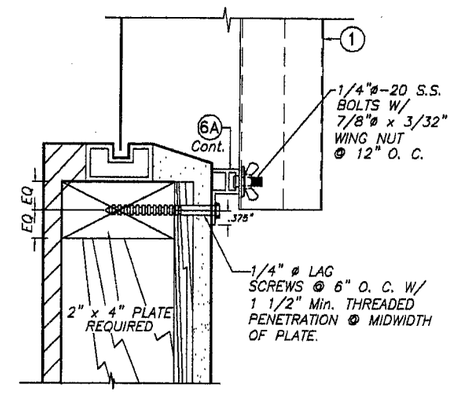

ALTERNATIVE 12 *

* VALID FOR Max. +63.5, −63.5 psf.

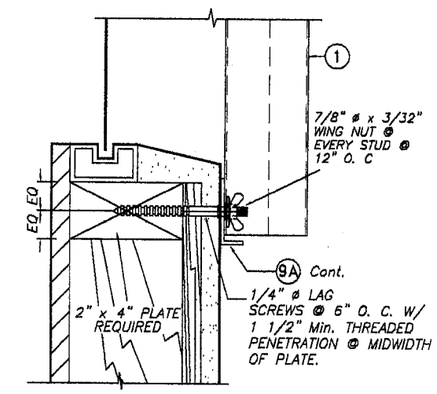

ALTERNATIVE 14

CEILING & FLOOR MOUNTING INSTALLATIONS

SCALE : 1/4" = 1"

WALL MOUNTING INSTALLATION

SCALE : 1/4" = 1"

NOTE FOR COMBINATION OF SECTIONS:

WALL/FLOOR/CEILING MOUNTING SECTIONS CAN BE COMBINED IN ANY WAY TO SUIT ANY INSTALLATION.

INSTALLATION DETAILS ON EXISTING WOOD BUILDINGS

PRODUCT RENEWED
as complying with the Florida
Building Code
Acceptance No 08-0623.06
Expiration Date 08/07/2013
By
Miami Dade Product Control
Division

PRODUCT REVISED
as complying with the Florida
Building Code
Acceptance No 05-0926.03
Expiration Date 08/07/2008
By
Miami Dade Product Control
Division

NOTES:

1. INSTALLATIONS ARE ONLY VALID FOR DESIGN WIND LOADS UP TO +65.0, −72.0 psf AND PANEL'S LENGTHS UP TO 9'−0", EXCEPT AS NOTED.
2. NEW 2" x 6" P. T. TO BE SOUTHERN PINE No. 2, SURFACED DRY WITH 19 % M. M. C. W/ SPECIFIC DENSITY OF 0.55.
3. FOR NEW WOOD FRAME CONSTRUCTION: WOOD MEMBERS TO BE SOUTHERN PINE No. 2, W/ SPECIFIC DENSITY OF 0.55 OR EQUAL.

SEP 15 2005

F.B.C.(High Velocity Hurricane Zone)

TILTECO INC.
TILLIT TESTING & ENGINEERING COMPANY
6355 N.W. 36th. St., Ste. 305, VIRGINIA GARDENS, Fl. 33166
Phone : (305)871-1530 . Fax : (305)871-1531
EB-0006719
WALTER A. TILLIT Jr. P. E.
FLORIDA Lic. # 44167

0.050" BERTHA ALUMINUM STORM PANEL

EASTERN METAL SUPPLY, INC.
4268 WESTROADS DR.
WEST PALM BEACH, FL 33407

REV. NO	DESCRIPTION	DATE	REV. No	DESCRIPTION	DATE
1	OLD 03-141	4/28/05	3	–	–
2	–	–	4	–	–

L.G.
DRAWN BY:

4/28/05
DATE

05-078
DRAWING No

SHEET 13 OF 15

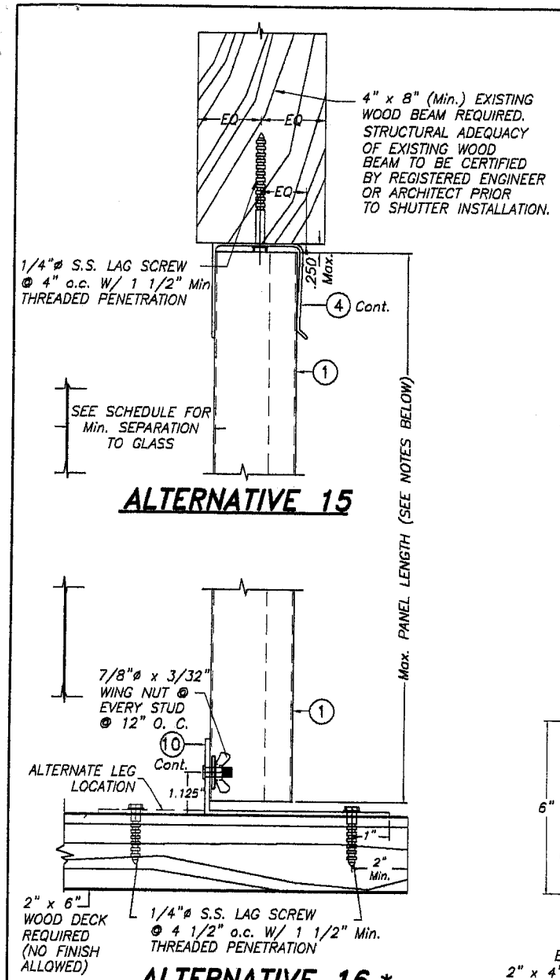

ALTERNATIVE 15

ALTERNATIVE 16 *

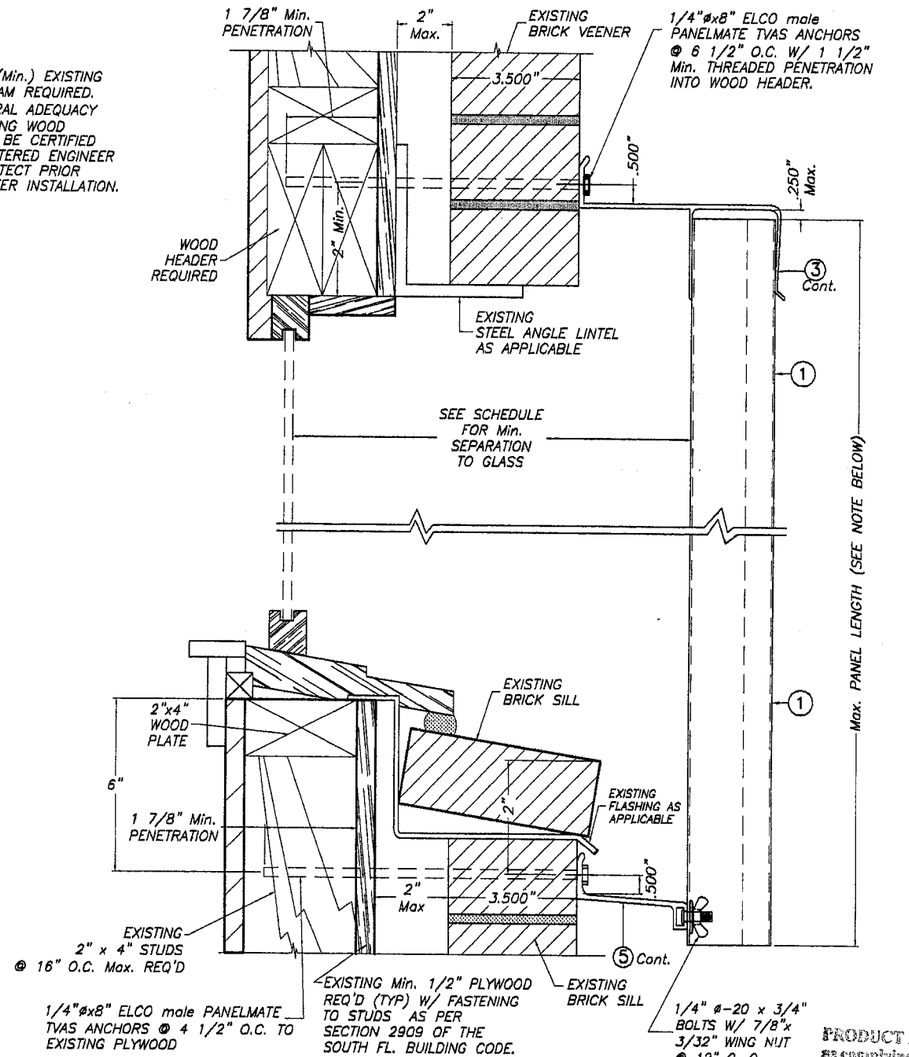

ALTERNATIVE 17 *

* VALID FOR Max. +63.5, -63.5 psf.

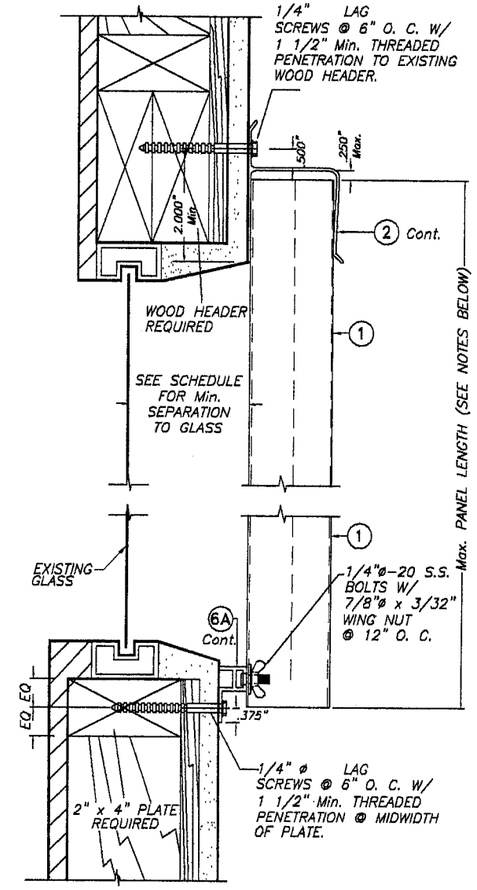

ALTERNATIVE 18A *

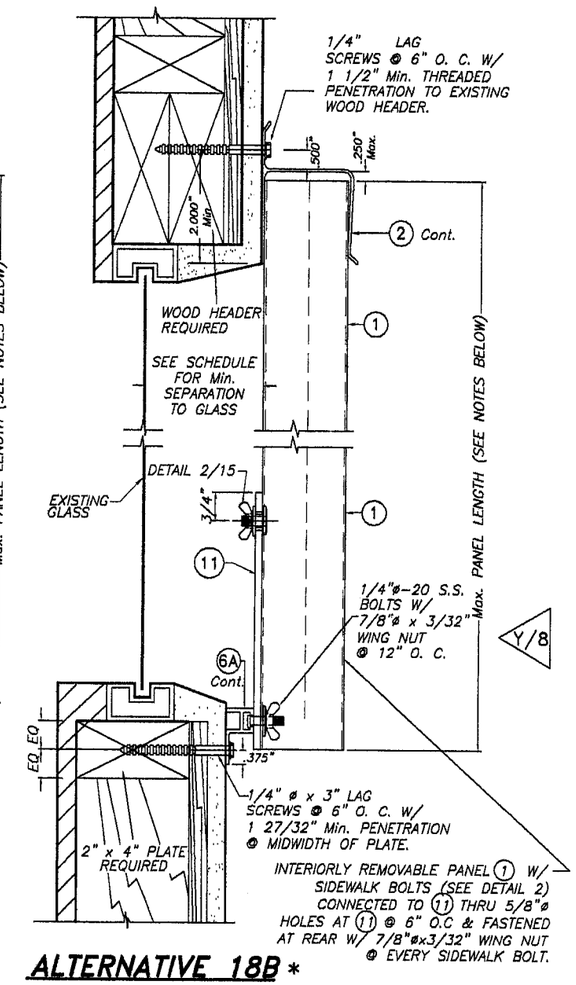

ALTERNATIVE 18B *

CEILING & FLOOR MOUNTING INSTALLATIONS

SCALE : 1/4" = 1"

BUILD-OUT INSTALLATION

SCALE : 1/4" = 1"

WALL MOUNTING INSTALLATIONS SECTIONS 18

SCALE : 1/4" = 1"

* VALID FOR Max. +63.5, -63.5 psf.

PRODUCT REVISED
as complying with the Florida Building Code
Acceptance No. 05-0926.03
Expiration Date 08/07/2008
By Helena A. Melo
Miami Dade Product Control Division

NOTE FOR COMBINATION OF SECTIONS:

WALL/FLOOR/CEILING MOUNTING SECTIONS CAN BE COMBINED IN ANY WAY TO SUIT ANY INSTALLATION.

INSTALLATIONS VALID FOR PANELS 1 USED JOINTLY WITH INTERIORLY REMOVABLE PANELS 1

INSTALLATION DETAILS ON EXISTING WOOD BUILDINGS

NOTES:

1. INSTALLATIONS ARE ONLY VALID FOR DESIGN WIND LOADS UP TO +65.0, -65.0 psf AND PANEL'S LENGTHS UP TO 9'-0", EXCEPT AS NOTED.
2. NEW 2" x 6" P. T. TO BE SOUTHERN PINE No. 2, SURFACED DRY WITH 19 % M. M. C. W/ SPECIFIC DENSITY OF 0.55.
3. FOR NEW WOOD FRAME CONSTRUCTION: WOOD MEMBERS TO BE SOUTHERN PINE No. 2, W/ SPECIFIC DENSITY OF 0.55 OR EQUAL.

PRODUCT RENEWED
as complying with the Florida Building Code
Acceptance No. 08-0623.06
Expiration Date 08/07/2013
By Helena A. Melo
Miami Dade Product Control Division

SEP 15 2005

F.B.C.(High Velocity Hurricane Zone)

TILTECO INC.
TILLIT TESTING & ENGINEERING COMPANY
6355 N.W. 36th. St., Ste. 305, VIRGINIA GARDENS, Fl. 33166
Phone : (305)871-1530 . Fax : (305)871-1531
EB-0006719
WALTER A. TILLIT Jr. P. E.
FLORIDA Lic. # 44167

0.050" BERTHA ALUMINUM STORM PANEL

EASTERN METAL SUPPLY, INC.
4268 WESTROADS DR.
WEST PALM BEACH, FL 33407

REV. NO	DESCRIPTION	DATE	REV. No	DESCRIPTION	DATE
1	OLD 03-141	4/28/05	3	-	-
2	-	-	4	-	-

L.G.
DRAWN BY:

4/28/05
DATE

05-078
DRAWING No

SHEET 14 OF 15

+ ALTERNATIVELY, TRACK ④ MAY BE ATTACHED TO HOLLOW CEILING AS PER DETAILS SHOWN ON ALTERNATIVE 9A, SHEET 13 OF 15.

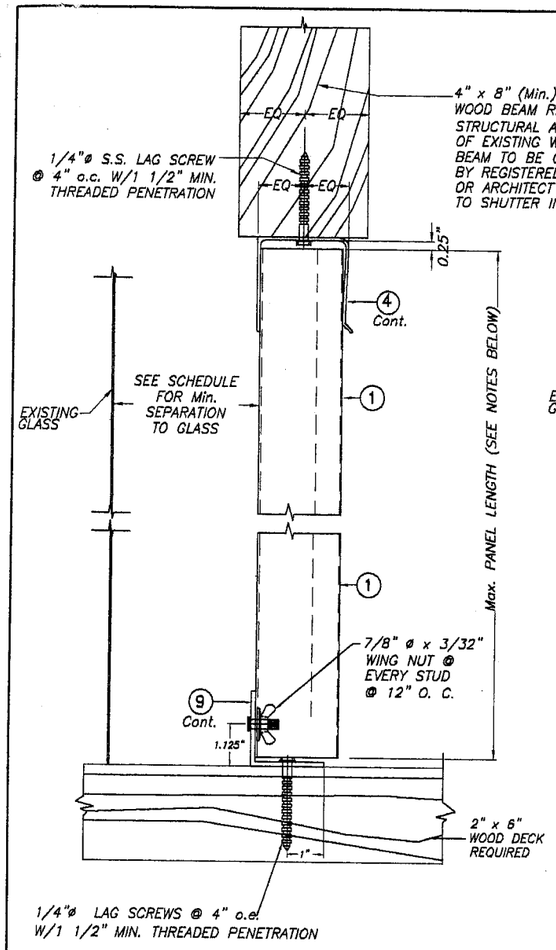

ALTERNATIVE 19A

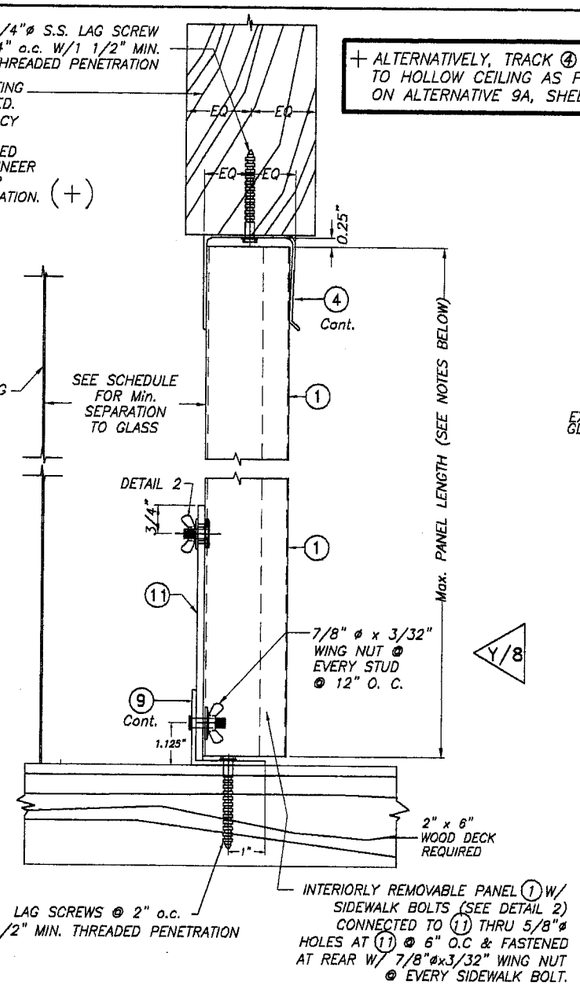

ALTERNATIVE 19B

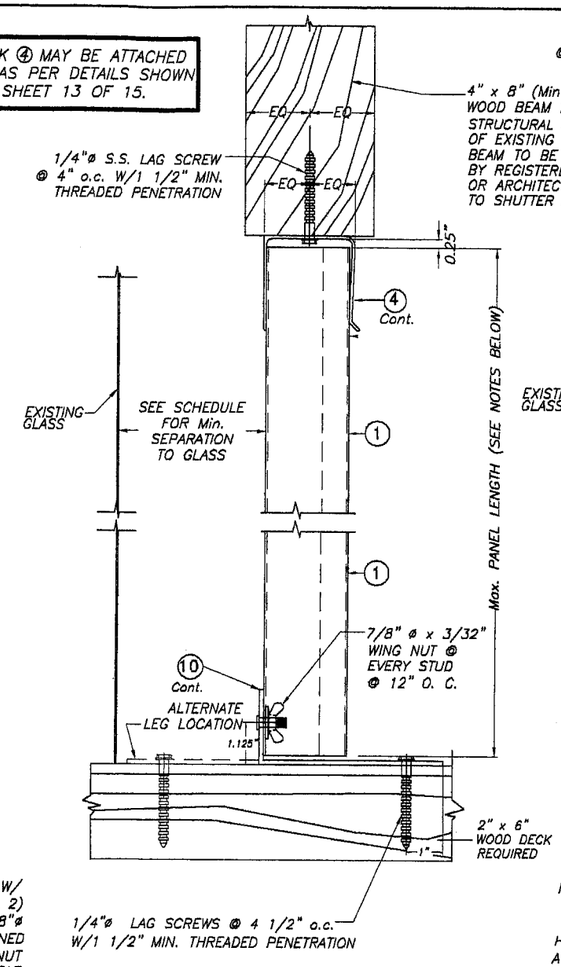

ALTERNATIVE 20A

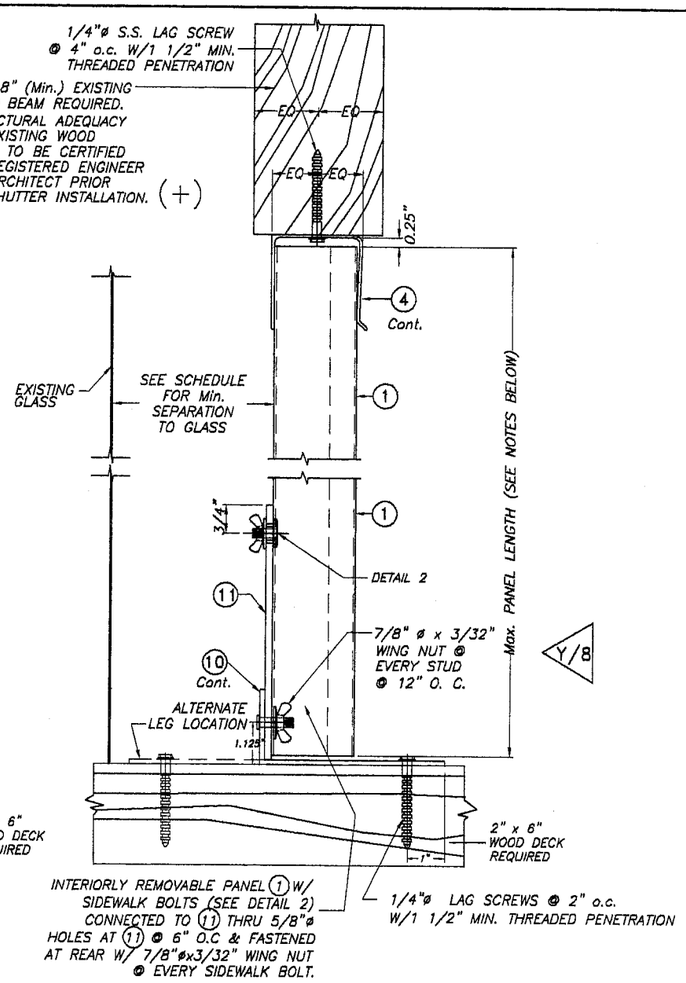

ALTERNATIVE 20B

CEILING & FLOOR MOUNTING INSTALLATIONS SECTIONS 19

SCALE : 1/4" = 1"

CEILING & FLOOR MOUNTING INSTALLATIONS SECTIONS 20

SCALE : 1/4" = 1"

PRODUCT RENEWED as complying with the Florida Building Code
Acceptance No 08-0623.06
Expiration Date 08/07/2013
By Helena A. Molina
Miami Dade Product Control Division

PRODUCT REVISED as complying with the Florida Building Code
Acceptance No 05-0926.03
Expiration Date 08/07/2008
By Helena A. Molina
Miami Dade Product Control Division

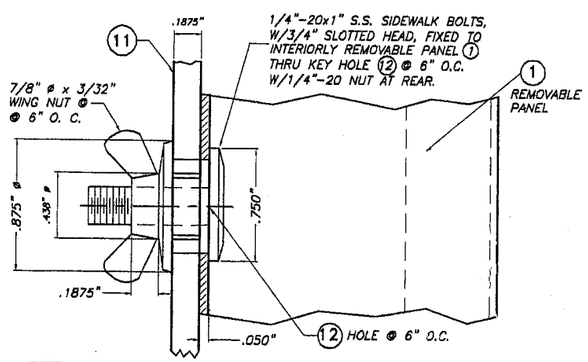

DETAIL 2 – INSTALLATION OF 1/4"x1" SIDEWALK BOLTS @ REMOVABLE PANEL

SCALE: 1" = 1"

NOTE FOR COMBINATION OF SECTIONS:

FLOOR/CEILING MOUNTING SECTIONS CAN BE COMBINED IN ANY WAY TO SUIT ANY INSTALLATION.

INSTALLATION DETAILS ON EXISTING WOOD BUILDINGS

NOTES:

1. INSTALLATIONS ARE ONLY VALID FOR DESIGN WIND LOADS UP TO +65.0, −65.0 psf AND PANEL'S LENGTHS UP TO 9'−0".
2. NEW 2" x 6" P. T. TO BE SOUTHERN PINE No. 2, SURFACED DRY WITH 19 % M. M. C. W/ SPECIFIC DENSITY OF 0.55.
3. FOR NEW WOOD FRAME CONSTRUCTION: WOOD MEMBERS TO BE SOUTHERN PINE No. 2, W/ SPECIFIC DENSITY OF 0.55 OR EQUAL.

F.B.C.(High Velocity Hurricane Zone)

TILTECO INC.
TILLIT TESTING & ENGINEERING COMPANY
6355 N.W. 36th. St., Ste. 305, VIRGINIA GARDENS, Fl. 33166
Phone : (305)871-1530 . Fax : (305)871-1531
EB-0006719
WALTER A. TILLIT Jr. P. E.
FLORIDA Lic. # 44167

0.050" BERTHA ALUMINUM STORM PANEL

EASTERN METAL SUPPLY, INC.
426B WESTROADS DR.
WEST PALM BEACH, FL 33407

REV. NO	DESCRIPTION	DATE	REV. No	DESCRIPTION	DATE
1	OLD 03-141	4/28/05	3	–	–
2	–	–	4	–	–

L.G. DRAWN BY:
4/28/05 DATE
05-078 DRAWING No
SHEET 15 OF 15

SEP 15 2005