MIAMI-DADE COUNTY
BUILDING CODE COMPLIANCE OFFICE (BCCO)
PRODUCT CONTROL DIVISION

MIAMI-DADE COUNTY, FLORIDA
METRO-DADE FLAGLER BUILDING
140 WEST FLAGLER STREET, SUITE 1603
MIAMI, FLORIDA 33130-1563
(305) 375-2901 FAX (305) 372-6339
www.maimidade.gov/buildingcode

NOTICE OF ACCEPTANCE (NOA)

Arch Aluminum & Glass Company
10200 NW 67 Street
Tamarac, FL 33321

SCOPE:

This NOA is being issued under the applicable rules and regulations governing the use of construction materials. The documentation submitted has been reviewed by Miami-Dade County Product Control Division and accepted by the Board of Rules and Appeals (BORA) to be used in Miami Dade County and other areas where allowed by the Authority Having Jurisdiction (AHJ).

This NOA shall not be valid after the expiration date stated below. The Miami-Dade County Product Control Division (In Miami Dade County) and/or the AHJ (in areas other than Miami Dade County) reserve the right to have this product or material tested for quality assurance purposes. If this product or material fails to perform in the accepted manner, the manufacturer will incur the expense of such testing and the AHJ may immediately revoke, modify, or suspend the use of such product or material within their jurisdiction. BORA reserves the right to revoke this acceptance, if it is determined by Miami-Dade County Product Control Division that this product or material fails to meet the requirements of the applicable building code.

This product is approved as described herein, and has been designed to comply with the Florida Building Code, including the High Velocity Hurricane Zone.

DESCRIPTION: Series "3000/L-3000" Aluminum Window Wall System - L.M.I.

APPROVAL DOCUMENT: Drawing No. **98-42**, titled "Impact wall 3000/L-3000 Window Wall Sys.", sheets 1 through 11 of 11, dated 12/09/98, with last Revision I dated 10/14/08, prepared by Al-Farooq Corporation, signed and sealed by Humayoun Farooq, P.E., bearing the Miami-Dade County Product Control Revision stamp with the Notice of Acceptance number and expiration date by the Miami-Dade County Product Control Division.

MISSILE IMPACT RATING: Large and Small Missile Impact Resistant

LABELING: Each unit shall bear a permanent label with the manufacturer's name or logo, city, state and following statement: "Miami-Dade County Product Control Approved", unless otherwise noted herein.

RENEWAL of this NOA shall be considered after a renewal application has been filed and there has been no change in the applicable building code negatively affecting the performance of this product.

TERMINATION of this NOA will occur after the expiration date or if there has been a revision or change in the materials, use, and/or manufacture of the product or process. Misuse of this NOA as an endorsement of any product, for sales, advertising or any other purposes shall automatically terminate this NOA. Failure to comply with any section of this NOA shall be cause for termination and removal of NOA.

ADVERTISEMENT: The NOA number preceded by the words Miami-Dade County, Florida, and followed by the expiration date may be displayed in advertising literature. If any portion of the NOA is displayed, then it shall be done in its entirety.

INSPECTION: A copy of this entire NOA shall be provided to the user by the manufacturer or its distributors and shall be available for inspection at the job site at the request of the Building Official.

This NOA **revises and renews NOA # 08-1024.05** and consists of this page 1 and evidence pages E-1, E-2 and E-3, as well as approval document mentioned above.

The submitted documentation was reviewed by **Fitz A. Harris, P.E.**

Fitz A. Harris
2/25/09

MIAMI-DADE COUNTY APPROVED

NOA No. 09-0122.06
Expiration Date: March 18, 2014
Approval Date: March 18, 2009

NOTICE OF ACCEPTANCE: EVIDENCE SUBMITTED

A. DRAWINGS

1. Manufacturer's die drawings and sections.
2. Drawing No. **98-42**, titled "Impact wall 3000/L-3000 Window Wall Sys", sheets 1 through 11 of 11, dated 12/09/98, with last Revision H dated 10/14/08, prepared by Al-Farooq Corporation, signed and sealed by Humayoun Farooq, P.E.

B. TESTS

1. Test reports on 1) Large Missile Impact Test per FBC, TAS 201-94
   2) Cyclic Wind Pressure Loading per FBC, TAS 203-94
   along with marked-up drawings and installation diagram of Series 3000/L-3000 Aluminum Window Wall System, prepared by Fenestration Testing Laboratory, Inc., Test Report No. **FTL-5416**, dated 11/15/07, signed and sealed by Michael Wenzel, P.E.
2. Test reports on Safety Glazing Materials per ANSI Z97.1-1984 and CPSC 16 CFR 1201 of Series 3000/L-3000 Aluminum Window Wall System, prepared by Fenestration Testing Laboratory, Inc., Test Report No. **FTL-5421**, dated 10/18/07, signed and sealed by Michael Wenzel, P.E.

3. Test reports on 1) Uniform Static Air Pressure Test per FBC, TAS 202-94
   2) Large Missile Impact Test per FBC, TAS 201-94
   3) Cyclic Wind Pressure Loading per FBC, TAS 203-94
   along with marked-up drawings and installation diagram of an aluminum storefront system, prepared & issued by Fenestration Testing Laboratory, Test Report No. **3398 (FTL-03175),** dated December 10, 2003, signed & sealed by Edmundo J. Largaespada, P.E.
   "Submitted under NOA# 03-1211.08"
4. Test reports on 1) Uniform Static Air Pressure Test per FBC, TAS 202-94
   2) Large Missile Impact Test per FBC, TAS 201-94
   3) Cyclic Wind Pressure Loading per FBC, TAS 203-94
   along with marked-up drawings and installation diagram of aluminum Window Wall system, prepared & issued by Fenestration Testing Laboratory, Test Report No. **3363 (FTL-02180)** dated April 24, 2003, signed and sealed by Edmundo J. Largaespada, P.E.
   "Submitted under NOA# 03-1211.08"

Fitz A. Harris

Fitz A. Harris, P.E.
Product Control Examiner
NOA No. 09-0122.06
Expiration Date: March 18, 2014
Approval Date: March 18, 2009

NOTICE OF ACCEPTANCE: EVIDENCE SUBMITTED

5. Test reports on 1) Large Missile Impact Test PA 201-94
   2) Cyclic Loading Test, per SFBC PA 203-94
   along with installation diagram of an aluminum window wall system marked-up by Fenestration Testing Laboratory, Inc. Test Reports Nos. **FTL-3326 (01088)**, report dated January 09, 2002, signed and sealed by Luis Antonio Figueredo, P.E.
   "Submitted under NOA# 03-1211.08"
6. Test reports on 1) Air Infiltration Test, per SFBC, PA 202-94
   2) Uniform Static Air Pressure Test, Loading per SFBC, PA 202-94
   3) Water Resistance Test, per SFBC, PA 202-94
   4) Large Missile Impact Test per SFBC, PA 201-94
   5) Cyclic Wind Pressure Loading per SFBC, PA 203-94
   along with marked-up drawings and installation diagram of an aluminum window wall system, prepared by Fenestration Testing Laboratory, Inc., Test Report No. **FTL-1010**, dated Oct. 25, 1994, signed and sealed by Yamil Gerardo Kuri, P.E.
   "Submitted under NOA# 03-1211.08"
7. Test reports on 1) Air Infiltration Test, per SFBC, PA 202-94
   2) Uniform Static Air Pressure Test, Loading per SFBC, PA 202-94
   3) Water Resistance Test, per SFBC, PA 202-94
   along with marked-up drawings and installation diagram of an aluminum window wall system, prepared by Fenestration Testing Laboratory, Inc., Test Report No. **FTL-2221**, dated Dec. 9, 1998, signed and sealed by Gilbert Diamond, P.E.
   "Submitted under NOA# 03-1211.08"

C. CALCULATIONS

1. Anchor verification calculations and structural analysis, complying with FBC-2004/2007, prepared by Al-Farooq Corporation, dated 5/23/06, 01/23/08 and 10/09/08, signed and sealed by Humayoun Farooq, P.E.
   Complies with ASTM E1300-02

D. QUALITY ASSURANCE

1. Miami Dade Building Code Compliance Office (BCCO).

Fitz A. Harris

Fitz A. Harris, P.E.
Product Control Examiner
NOA No. 09-0122.06
Expiration Date: March 18, 2014
Approval Date: March 18, 2009

NOTICE OF ACCEPTANCE: EVIDENCE SUBMITTED

E. MATERIAL CERTIFICATIONS

1. Notice of Acceptance No. **07-1116.04** issued to E.I. DuPont DeNemours & Co., Inc. for their "**DuPont SentryGlas ® Plus**" dated 01/03/08, expiring on 01/14/12.
2. Notice of Acceptance No. **06-0216.06** issued to Solutia Inc. for their "**Saflex IIIG Clear or colored Interlayer**" dated 05/04/06, expiring on 05/21/11.
3. Notice of Acceptance No. **08-0206.01** issued to Solutia Inc. for their "**Saflex HP a polyvinyl butryal interlayer for lamination of glass**" dated 04/17/08, expiring on 04/14/13.

F. STATEMENTS

1. Statement letter of conformance issued Al-Farooq Corporation, dated 10/09/08, signed and sealed by Humayoun Farooq, P.E.
2. Statement letter of no financial interest issued Al-Farooq Corporation, dated 01/23/08, signed and sealed by Humayoun Farooq, P.E.
3. Laboratory compliance letter for Test Reports No. **FTL- 5416** and **FTL-5421**, issued by Fenestration Testing Laboratory, Inc., dated 11/15/07 and 10/18/07 respectively and signed and sealed by Michael Wenzel, P.E.
4. Laboratory compliance letter for Test Report No. **FTL- 5416** and **FTL-5421**, issued by Fenestration Testing Laboratory, Inc., dated 11/20/07 and 10/29/07 respectively, signed and sealed by Michael Wenzel, P.E.

G. OTHER

1. Notice of Acceptance No. **08-0331.05**, issued to Arch Aluminum & Glass Company, approved on 05/29/08 and expiring on 03/05/09.

Fitz A. Harris

Fitz A. Harris, P.E.
Product Control Examiner
NOA No. 09-0122.06
Expiration Date: March 18, 2014
Approval Date: March 18, 2009

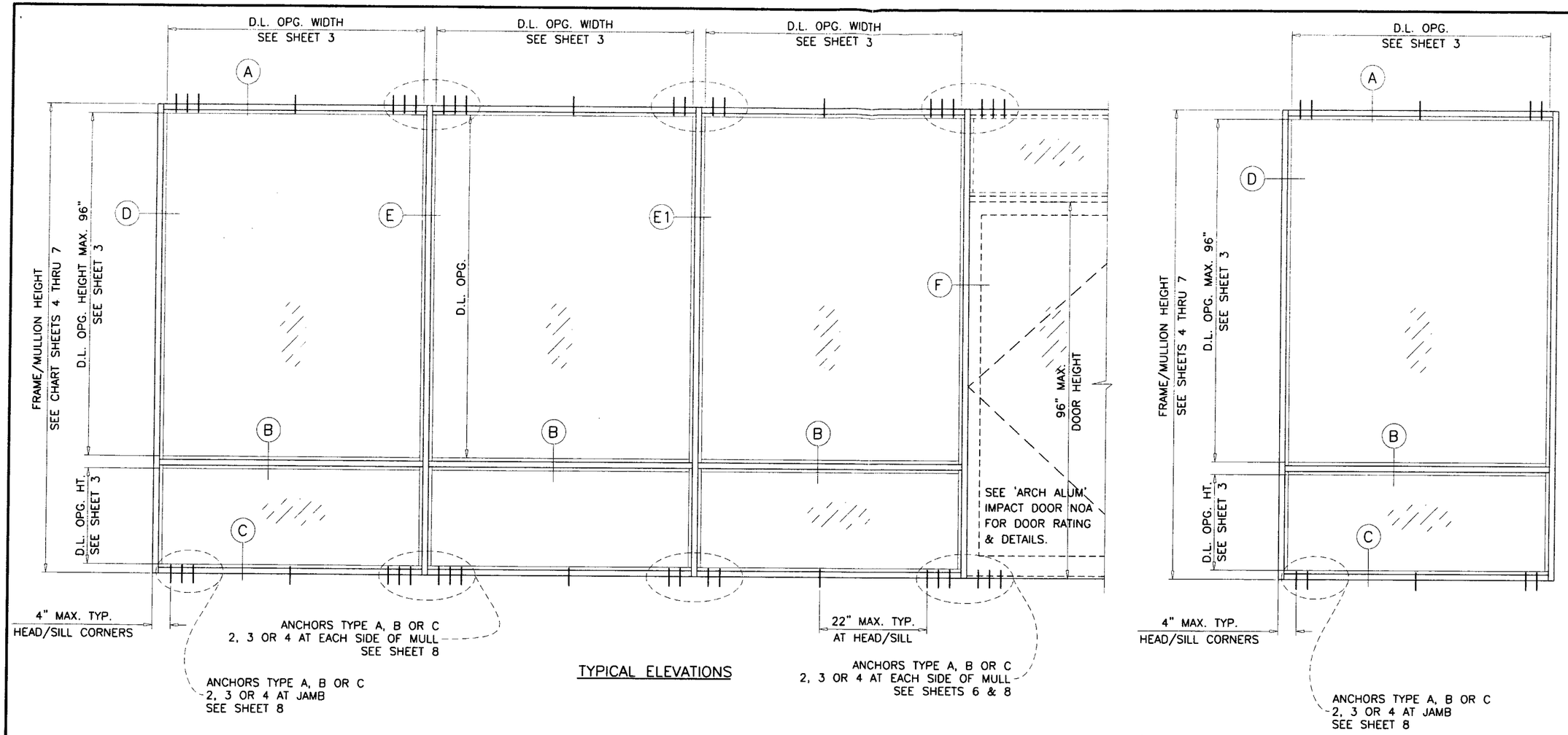

TYPICAL ELEVATIONS

IMPACT WALL 3000/L-3000 ALUMINUM WINDOW WALL SYSTEM INSIDE OR OUTSIDE GLAZED

WINDOW WALL SYSTEM IS RATED FOR LARGE MISSILE IMPACT. SHUTTERS NOT REQUIRED.

THIS SYSTEM MAY BE USED IN CONJUNCTION WITH MIAMI DADE COUNTY APPROVED ENTRANCE DOORS.

CODE REQUIREMENTS FOR SAFEGUARDS MUST BE OBSERVED.

THIS PRODUCT HAS BEEN DESIGNED AND TESTED TO COMPLY WITH THE REQUIREMENTS OF THE FLORIDA BUILDING CODE 2004/2007 EDITION INCLUDING HIGH VELOCITY HURRICANE ZONE (HVHZ).

WOOD BUCKS BY OTHERS, MUST BE ANCHORED PROPERLY TO TRANSFER LOADS TO THE STRUCTURE.

ANCHORS SHALL BE AS LISTED, SPACED AS SHOWN ON DETAILS, ANCHORS EMBEDMENT TO BASE MATERIAL SHALL BE BEYOND WALL DRESSING OR STUCCO.

ANCHORING OR LOADING CONDITIONS NOT SHOWN IN THESE DETAILS ARE NOT PART OF THIS APPROVAL.

A LOAD DURATION INCREASE IS USED IN DESIGN OF ANCHORS INTO WOOD ONLY.

MATERIALS INCLUDING BUT NOT LIMITED TO STEEL/METAL SCREWS, THAT COME INTO CONTACT WITH OTHER DISSIMILAR MATERIALS SHALL MEET THE REQUIREMENTS OF 2004/2007 FLORIDA BLDG. CODE SECTION 2003.8.4.

INSTRUCTIONS:

USE CHARTS AS FOLLOWS.

STEP 1 DETERMINE DESIGN WIND LOAD REQUIREMENT BASED ON WIND VELOCITY, BLDG. HEIGHT, WIND ZONE USING APPLICABLE ASCE 7 STANDARD.

STEP 2 SEE CHARTS ON SHEET 3 FOR DESIGN LOAD CAPACITY OF DESIRED GLASS SIZE.

STEP 3 CHECK MULLION CAPACITY FOR A GIVEN SPACING AND HEIGHT USING CHARTS ON SHEET 4 THRU 7 THE CAPACITY SHOULD EXCEED THE DESIGN LOAD.

STEP 4 USING CHART ON SHEET 8 SELECT ANCHOR OPTION WITH DESIGN RATING MORE THAN DESIGN LOAD SPECIFIED IN STEP 1 ABOVE.

STEP 5 THE LOWEST VALUE RESULTING FROM STEPS 2, 3 AND 4 SHALL APPLY TO ENTIRE SYSTEM.

PRODUCT COMPLIES WITH REQUIREMENTS OF ANSI Z97.1.

Engr: DR. HUMAYOUN FAROOQ
STRUCTURES
FLA. PE # 16557
C.A.N. 3538

FEB 2 3 2009

PRODUCT REVIEWED
as complying with the Florida
Building Code
Acceptance No. 09-0122.06
Expiration Date 3-18-2014
By Lily Harris
Miami Dade Product Control
Division

AL-FAROOQ CORPORATION
ENGINEERS & PRODUCT DEVELOPMENT
1235 S.W. 87 AVE
MIAMI, FLORIDA 33174
TEL. (305) 264-8100 FAX. (305) 262-6978

STORE\98-42AA

IMPACTWALL 3000/L-3000 WINDOW WALL SYS.

ARCH ALUMINUM & GLASS L.C.
10200 N.W. 67th street
TAMARAC, FL. 33321
TEL. (800) 432-8132 FAX. (954) 724-9293

revisions:

no	date	by	description
E	02.02.04		REV. PER BCCO COMMENTS
F	07.22.04		GENERAL REVISION
G	11.08.05		DTL. NO. REV.
H	01.12.08		NOTES REV.
I	10.14.08		UPDATED FOR 2007 FBC

date: 12-09-98
scale: 1/2"=1'-0"
dr. by: HAMID
chk. by:

drawing no.
98-42

sheet 1 of 11

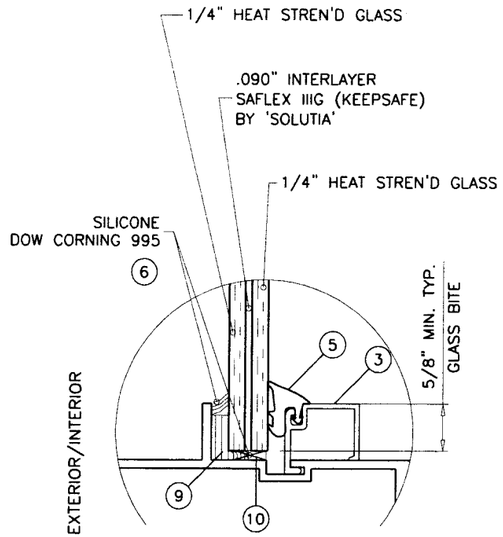

GLASS TYPE 'A'

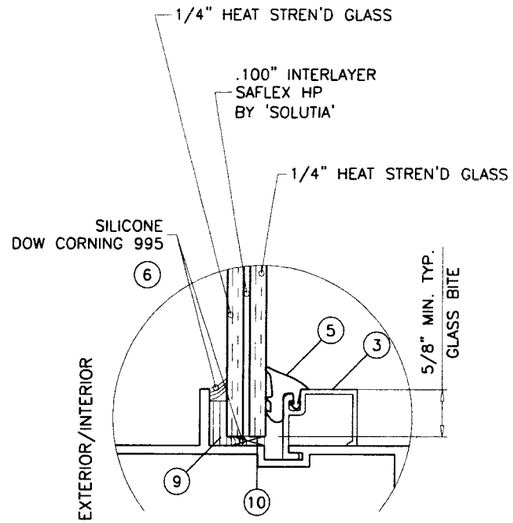

GLASS TYPE 'B'

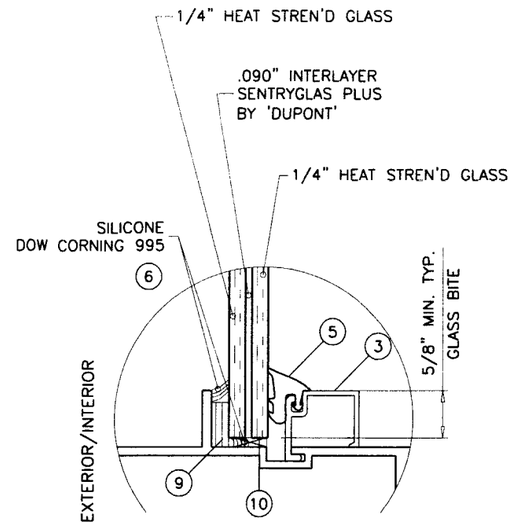

GLASS TYPE 'C'

GLAZING OPTIONS

9/16" OVERALL LAMINATED GLASS

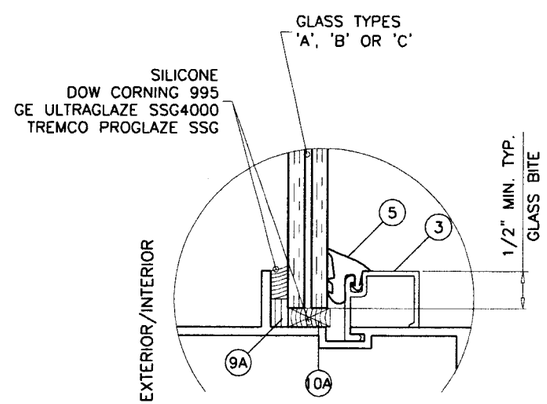

ALTERNATE GLAZING DETAIL

PRODUCT REVISED
as complying with the Florida
Building Code
Acceptance No 09-0122.06
Expiration Date 3-18-2014
By Dity Harris
Miami Dade Product Control
Division

Engr: DR. HUMAYOUN FAROOQ
STRUCTURES
FLA. PE # 16557
C.A.N. 3538

FEB 23 2009

AL-FAROOQ CORPORATION
ENGINEERS & PRODUCT DEVELOPMENT
1235 S.W. 87 AVE
MIAMI, FLORIDA 33174
TEL. (305) 264-8100 FAX. (305) 262-6978

STORE\98-42AA

IMPACTWALL 3000/L-3000 WINDOW WALL SYS.

ARCH ALUMINUM & GLASS L.C.
10200 N.W. 67th street
TAMARAC, FL. 33321
TEL. (800) 432-8132 FAX. (954) 724-9293

revisions:

no	date	by	description
H	01.12.08		GLAZING DETAIL ADDED
I	10.14.08		NO CHANGE THIS SHEET

date: 12-09-98
scale: 1/2" = 1"
dr. by: HAMID
chk. by:

drawing no.
98-42

sheet 2 of 11

DESIGN LOAD CAPACITY – PSF				
NOMINAL DIMS.		GLASS TYPE 'A'	GLASS TYPE 'B'	GLASS TYPE 'C'
D.L.O. WIDTH	D.L.O. HEIGHT	EXT. (+) INT. (–)	EXT. (+) INT. (–)	EXT. (+) INT. (–)
36"	87"	87.0	100.0	100.0
39"		87.0	100.0	100.0
42"		87.0	100.0	100.0
45"		87.0	100.0	100.0
48"		87.0	100.0	100.0
51"		87.0	100.0	100.0
54"		87.0	100.0	100.0
57"		87.0	100.0	100.0
60"		87.0	100.0	100.0
63"		87.0	100.0	100.0
66"		87.0	100.0	100.0
69"		87.0	100.0	100.0
72"		87.0	100.0	100.0
36"	90"	87.0	100.0	100.0
39"		87.0	100.0	100.0
42"		87.0	100.0	100.0
45"		87.0	100.0	100.0
48"		87.0	100.0	100.0
51"		87.0	100.0	100.0
54"		87.0	100.0	100.0
57"		87.0	100.0	100.0
60"		87.0	100.0	100.0
63"		87.0	100.0	100.0
66"		87.0	100.0	100.0
69"		87.0	100.0	100.0
72"		87.0	100.0	–
36"	93"	87.0	100.0	100.0
39"		87.0	100.0	100.0
42"		87.0	100.0	100.0
45"		87.0	100.0	100.0
48"		87.0	100.0	100.0
51"		87.0	100.0	100.0
54"		87.0	100.0	100.0
57"		87.0	100.0	100.0
60"		87.0	100.0	100.0
63"		87.0	100.0	100.0
66"		87.0	100.0	100.0
69"		87.0	100.0	–
72"		87.0	100.0	–
36"	96"	87.0	100.0	100.0
39"		87.0	100.0	100.0
42"		87.0	100.0	100.0
45"		87.0	100.0	100.0
48"		87.0	100.0	100.0
51"		87.0	100.0	100.0
54"		87.0	100.0	100.0
57"		87.0	100.0	100.0
60"		87.0	100.0	100.0
63"		87.0	100.0	100.0
66"		87.0	100.0	100.0
69"		87.0	100.0	–

DESIGN LOAD CAPACITY – PSF				
NOMINAL DIMS.		GLASS TYPE 'A'	GLASS TYPE 'B'	GLASS TYPE 'C'
D.L.O. WIDTH	D.L.O. HEIGHT	EXT. (+) INT. (–)	EXT. (+) INT. (–)	EXT. (+) INT. (–)
36"	99"	87.0	100.0	100.0
39"		87.0	100.0	100.0
42"		87.0	100.0	100.0
45"		87.0	100.0	100.0
48"		87.0	100.0	100.0
51"		87.0	100.0	100.0
54"		87.0	100.0	100.0
57"		87.0	100.0	100.0
60"		87.0	100.0	100.0
63"		87.0	100.0	100.0
66"		87.0	100.0	–
36"	102"	87.0	100.0	100.0
39"		87.0	100.0	100.0
42"		87.0	100.0	100.0
45"		87.0	100.0	100.0
48"		87.0	100.0	100.0
51"		87.0	100.0	100.0
54"		87.0	100.0	100.0
57"		87.0	100.0	100.0
60"		87.0	100.0	100.0
63"		87.0	100.0	100.0
66"		87.0	100.0	–
36"	105"	87.0	100.0	100.0
39"		87.0	100.0	100.0
42"		87.0	100.0	100.0
45"		87.0	100.0	100.0
48"		87.0	100.0	100.0
51"		87.0	100.0	100.0
54"		87.0	100.0	100.0
57"		87.0	100.0	100.0
60"		87.0	100.0	100.0
63"		87.0	100.0	–
36"	108"	87.0	100.0	100.0
39"		87.0	100.0	100.0
42"		87.0	100.0	100.0
45"		87.0	100.0	100.0
48"		87.0	100.0	100.0
51"		87.0	100.0	100.0
54"		87.0	100.0	100.0
57"		87.0	100.0	100.0
60"		87.0	100.0	–
63"		87.0	100.0	–
36"	111"	87.0	100.0	100.0
39"		87.0	100.0	100.0
42"		87.0	100.0	100.0
45"		87.0	100.0	100.0
48"		87.0	100.0	100.0
51"		87.0	100.0	100.0
54"		87.0	100.0	100.0
57"		87.0	100.0	100.0
60"		87.0	100.0	–

DESIGN LOAD CAPACITY – PSF				
NOMINAL DIMS.		GLASS TYPE 'A'	GLASS TYPE 'B'	GLASS TYPE 'C'
D.L.O. WIDTH	D.L.O. HEIGHT	EXT. (+) INT. (–)	EXT. (+) INT. (–)	EXT. (+) INT. (–)
36"	114"	87.0	100.0	100.0
39"		87.0	100.0	100.0
42"		87.0	100.0	100.0
45"		87.0	100.0	100.0
48"		87.0	100.0	100.0
51"		87.0	100.0	100.0
54"		87.0	100.0	100.0
57"		87.0	100.0	–
36"	117"	87.0	100.0	100.0
39"		87.0	100.0	100.0
42"		87.0	100.0	100.0
45"		87.0	100.0	100.0
48"		87.0	100.0	100.0
51"		87.0	100.0	100.0
54"		87.0	100.0	100.0
57"		87.0	100.0	–
36"	120"	87.0	100.0	100.0
39"		87.0	100.0	100.0
42"		87.0	100.0	100.0
45"		87.0	100.0	100.0
48"		87.0	100.0	100.0
51"		87.0	100.0	100.0
54"		87.0	100.0	–

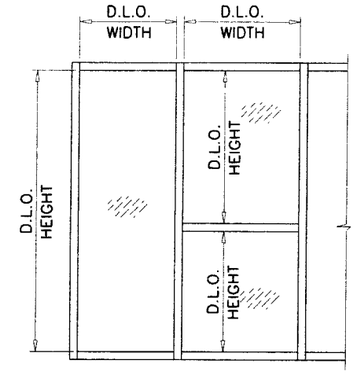

NOTE:
GLASS CAPACITIES ON THIS SHEET ARE
BASED ON ASTM E1300–02/04 (3 SEC. GUSTS)

Engr: DR. HUMAYCUN FAROOQ
STRUCTURES
FLA. PE # 16557
C.A.N. 3538

FEB 2 3 2009

PRODUCT REVISED
as complying with the Florida Building Code
Acceptance No 09-0122.06
Expiration Date 3.18.2014
By Fitz Harris
Miami Dade Product Control Division

AL-FAROOQ CORPORATION
ENGINEERS & PRODUCT DEVELOPMENT
1235 S.W. 87 AVE
MIAMI, FLORIDA 33174
TEL. (305) 264-8100 FAX. (305) 262-6978

STORE 98–42AA

IMPACTWALL 3000/L-3000 WINDOW WALL SYS.

ARCH ALUMINUM & GLASS L.C.
10200 N.W. 67th street
TAMARAC, FL. 33321
TEL. (800) 432-8132 FAX. (954) 724-9293

revisions:

no	date	by	description
E	02.02.04		REV. PER BCCO COMMENTS
F	07.22.04		GENERAL REVISION
G	11.08.05		NO CHANGE THIS SHEET
H	01.12.08		NOTES REV.
I	10.14.08		NO CHANGE THIS SHEET

date: 12–09–98
scale: 1/2" = 1"
dr. by: HAMID
chk. by:

drawing no.
98–42

MULLION LOAD CAPACITY – PSF
WITHOUT INTERMEDIATE HORIZONTALS

NOMINAL DIMS.		WITHOUT REINFORCING	WITH REINFORCING
WIDTH (W)	FRAME HEIGHT	EXT.(+) / INT.(–)	EXT.(+) / INT.(–)
24"	78"	87.5	100.0
30"		87.5	100.0
36"		87.5	100.0
42"		87.5	100.0
48"		87.5	100.0
54"		87.5	100.0
60"		87.5	100.0
66"		87.5	100.0
72"		87.5	100.0
24"	84"	87.5	100.0
30"		87.5	100.0
36"		87.5	100.0
42"		87.5	100.0
48"		87.5	100.0
54"		87.5	100.0
60"		85.6	100.0
66"		81.3	100.0
72"		78.5	100.0
24"	90"	87.5	100.0
30"		87.5	100.0
36"		87.5	100.0
42"		87.5	100.0
48"		81.7	100.0
54"		75.0	100.0
60"		70.1	100.0
66"		66.5	100.0
72"		63.9	100.0
24"	96"	87.5	100.0
30"		87.5	100.0
36"		84.4	100.0
42"		73.9	100.0
48"		66.3	100.0
54"		60.7	100.0
60"		56.4	100.0
66"		53.2	100.0
72"		50.8	100.0
24"	102"	87.5	100.0
30"		82.6	100.0
36"		69.9	100.0
42"		61.0	100.0
48"		54.6	100.0
54"		49.8	100.0
60"		46.1	95.9
66"		43.3	90.0
72"		–	85.6

MULLION LOAD CAPACITY – PSF
WITHOUT INTERMEDIATE HORIZONTALS

NOMINAL DIMS.		WITHOUT REINFORCING	WITH REINFORCING
WIDTH (W)	FRAME HEIGHT	EXT.(+) / INT.(–)	EXT.(+) / INT.(–)
24"	108"	85.7	100.0
30"		69.3	100.0
36"		58.5	100.0
42"		51.0	100.0
48"		45.5	94.7
54"		41.4	86.1
60"		38.2	79.5
66"		35.7	74.3
24"	114"	72.7	100.0
30"		58.7	100.0
36"		49.6	100.0
42"		43.1	89.7
48"		38.4	79.8
54"		34.8	72.4
60"		32.0	66.7
24"	120"	62.2	100.0
30"		50.2	100.0
36"		42.3	88.0
42"		36.8	76.5
48"		32.7	68.0
54"		29.6	61.5
60"		27.2	56.5

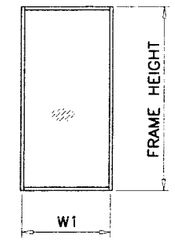

WIDTH (W) = W1 (JAMB)

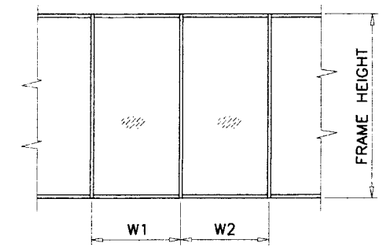

WIDTH (W) = $\frac{W1 + W2}{2}$

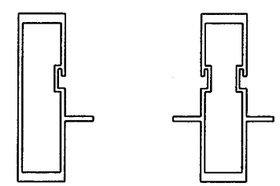

WITHOUT REINFORCING

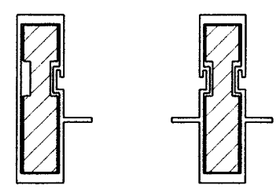

WITH REINFORCING

Engr: DR. HUMAYOUN FAROOQ
STRUCTURES
FLA. PE # 16557
C.A.N. 3538

FEB 23 2009

PRODUCT REVISED
as complying with the Florida
Building Code
Acceptance No 09-0122.06
Expiration Date 3.18.2014
By Jitty Harris
Miami Dade Product Control
Division

AL-FAROOQ CORPORATION
ENGINEERS & PRODUCT DEVELOPMENT
1235 S.W. 87 AVE
MIAMI, FLORIDA 33174
TEL. (305) 264-8100 FAX. (305) 262-6978
STORE\98-42AA

IMPACTWALL 3000/L-3000 WINDOW WALL SYS.

ARCH ALUMINUM & GLASS L.C.
10200 N.W. 67th street
TAMARAC, FL. 33321
TEL. (800) 432-8132 FAX. (954) 724-9293

revisions:

no	date	by	description
E	02.02.04		REV. PER BCCO COMMENTS
F	07.22.04		GENERAL REVISION
G	11.08.05		NO CHANGE THIS SHEET
H	01.12.08		NO CHANGE THIS SHEET
I	10.14.08		NO CHANGE THIS SHEET

date: 12-09-98
scale: 1/2" = 1"
dr. by: HAMID
chk. by:

drawing no.
98-42

MULLION LOAD CAPACITY – PSF
WITH INTERMEDIATE HORIZONTALS

NOMINAL DIMS.		WITHOUT REINFORCING	WITH REINFORCING
WIDTH (W)	FRAME HEIGHT	EXT.(+) / INT.(–)	EXT.(+) / INT.(–)
24"	78"	87.5	100.0
30"		87.5	100.0
36"		87.5	100.0
42"		87.5	100.0
48"		87.5	100.0
54"		87.5	100.0
60"		82.9	100.0
66"		75.4	100.0
72"		69.1	100.0
24"	84"	87.5	100.0
30"		87.5	100.0
36"		87.5	100.0
42"		87.5	100.0
48"		87.5	100.0
54"		79.0	100.0
60"		71.1	100.0
66"		64.6	100.0
72"		59.2	100.0
24"	90"	87.5	100.0
30"		87.5	100.0
36"		87.5	100.0
42"		83.1	100.0
48"		72.7	100.0
54"		64.6	100.0
60"		58.2	100.0
66"		52.9	100.0
72"		48.5	100.0
24"	96"	87.5	100.0
30"		87.5	100.0
36"		79.9	100.0
42"		68.5	100.0
48"		59.9	100.0
54"		53.3	100.0
60"		47.9	99.7
66"		43.6	90.7
72"		39.9	83.1
24"	102"	87.5	100.0
30"		79.9	100.0
36"		66.6	100.0
42"		57.1	100.0
48"		50.0	100.0
54"		44.4	92.4
60"		40.0	83.1
66"		36.3	75.6
72"		–	69.3

MULLION LOAD CAPACITY – PSF
WITH INTERMEDIATE HORIZONTALS

NOMINAL DIMS.		WITHOUT REINFORCING	WITH REINFORCING
WIDTH (W)	FRAME HEIGHT	EXT.(+) / INT.(–)	EXT.(+) / INT.(–)
24"	108"	84.2	100.0
30"		67.3	100.0
36"		56.1	100.0
42"		48.1	100.0
48"		42.1	87.5
54"		37.4	77.8
60"		33.7	70.0
66"		30.6	63.7
24"	114"	71.6	100.0
30"		57.3	100.0
36"		47.7	99.3
42"		40.9	85.1
48"		35.8	74.4
54"		31.8	66.2
60"		28.6	59.6
24"	120"	61.4	100.0
30"		49.1	100.0
36"		40.9	85.1
42"		35.1	72.9
48"		30.7	63.8
54"		27.3	56.7
60"		24.5	51.1

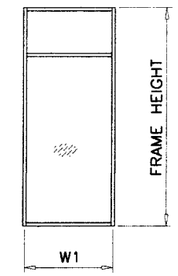

WIDTH (W) = W1 (JAMB)

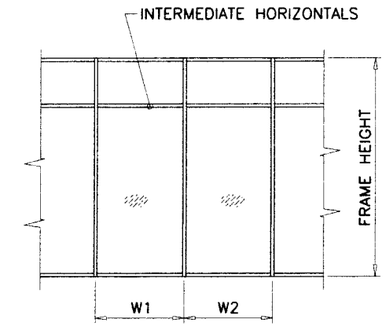

$$\text{WIDTH (W)} = \frac{W1 + W2}{2}$$

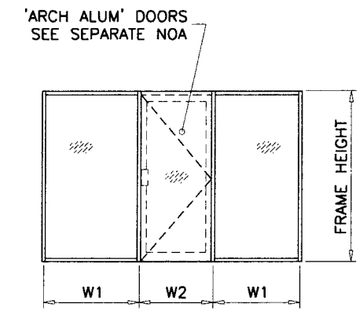

$$\text{WIDTH (W)} = \frac{W1 + W2}{2}$$

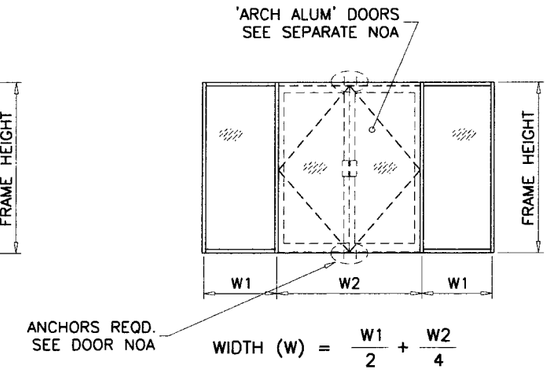

$$\text{WIDTH (W)} = \frac{W1}{2} + \frac{W2}{4}$$

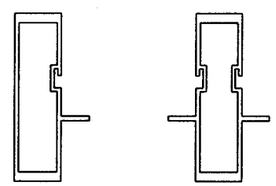

WITHOUT REINFORCING

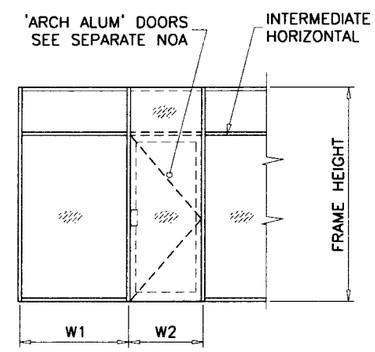

$$\text{WIDTH (W)} = \frac{W1 + W2}{2}$$

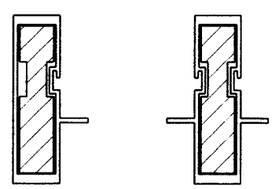

WITH REINFORCING

Engr: DR. HUMAYOUN FAROOQ
STRUCTURES
FLA. PE # 16557
C.A.N. 3538

FEB 23 2009

PRODUCT REVISED
as complying with the Florida Building Code
Acceptance No 09-0122.06
Expiration Date 3-18-2014
By Dirk Harris
Miami Date Product Control Division

AL-FAROOQ CORPORATION
ENGINEERS & PRODUCT DEVELOPMENT
1235 S.W. 87 AVE
MIAMI, FLORIDA 33174
TEL. (305) 264-8100 FAX. (305) 262-6978

STORE\98-42AA

IMPACTWALL 3000/L-3000 WINDOW WALL SYS.

ARCH ALUMINUM & GLASS L.C.
10200 N.W. 67th street
TAMARAC, FL. 33321
TEL. (800) 432-8132 FAX. (954) 724-9293

revisions:

no	date	by	description
E	02.02.04		REV. PER BCCO COMMENTS
F	07.22.04		GENERAL REVISION
G	11.08.05		NO CHANGE THIS SHEET
H	01.12.08		NO CHANGE THIS SHEET
I	10.14.08		NO CHANGE THIS SHEET

date: 12-09-98
scale: 1/2" = 1"
dr. by: HAMID
chk. by:

drawing no. 98-42

MULLION LOAD CAPACITY – PSF AT DOUBLE DOOR WITH TRANSOM

NOMINAL DIMS.				WITHOUT REINFORCING	WITH REINFORCING
WIDTH (W1)	WIDTH (W2)	LENGTH (A)	LENGTH (L)	EXT.(+) INT.(−)	EXT.(+) INT.(−)
60"	30"	96"	102"	71.1	87.5
	33"			68.1	87.5
	36"			65.3	87.5
	39"			62.7	87.5
	42"			60.3	87.5
	48"			56.0	87.5
	54"			52.3	87.5
72"	30"			64.5	87.5
	33"			62.0	87.5
	36"			59.6	87.5
	39"			57.5	87.5
	42"			55.5	87.5
	48"			51.8	87.5
	54"			48.6	87.5
60"	30"	96"	108"	56.8	87.5
	33"			54.5	87.5
	36"			52.4	87.5
	39"			50.4	87.5
	42"			48.6	87.5
	48"			45.3	87.5
	54"			42.4	87.5
72"	30"			51.3	87.5
	33"			49.4	87.5
	36"			47.6	87.5
	39"			46.0	87.5
	42"			44.5	87.5
	48"			41.7	87.2
	54"			39.2	82.1
60"	30"	96"	114"	46.2	87.5
	33"			44.4	87.5
	36"			42.8	87.5
	39"			41.2	86.2
	42"			39.8	83.2
	48"			37.2	77.7
	54"			34.9	72.9
72"	30"			41.6	87.5
	33"			40.1	83.9
	36"			38.8	81.1
	39"			37.5	78.4
	42"			36.3	75.9
	48"			34.1	71.3
	54"			32.2	67.3

MULLION LOAD CAPACITY – PSF AT DOUBLE DOOR WITH TRANSOM

NOMINAL DIMS.				WITHOUT REINFORCING	WITH REINFORCING
WIDTH (W1)	WIDTH (W2)	LENGTH (A)	LENGTH (L)	EXT.(+) INT.(−)	EXT.(+) INT.(−)
60"	30"	96"	120"	38.3	80.0
	33"			36.8	77.0
	36"			35.5	74.2
	39"			34.2	71.6
	42"			33.1	69.1
	48"			31.0	64.7
	54"			29.1	60.9
72"	30"			34.3	71.8
	33"			33.2	69.3
	36"			32.1	67.1
	39"			31.0	64.9
	42"			30.1	62.9
	48"			28.3	59.2

ANCHORS TYPE	TOTAL NO. OF ANCHORS AT DOOR MULLION HEAD	
	AT FIX. LITE	AT DOOR
A	4	3
B	3	2
C	3	2

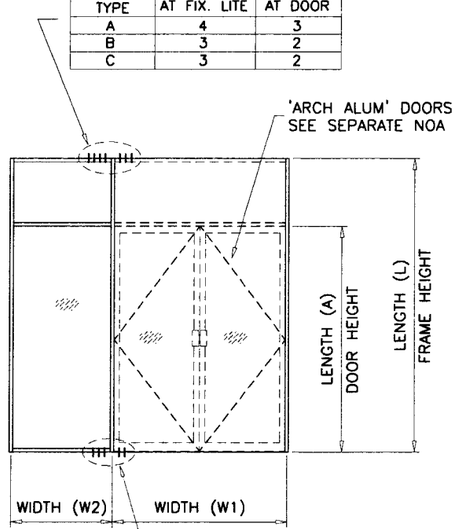

ANCHORS TYPE	TOTAL NO. OF ANCHORS AT DOOR MULLION SILL	
	AT FIX. LITE	AT DOOR
A	3	2
B	2	2
C	2	2

MULLION LOAD CAPACITY – PSF AT DOUBLE DOOR WITH TRANSOM

NOMINAL DIMS.				WITHOUT REINFORCING	WITH REINFORCING
WIDTH (W1)	WIDTH (W2)	LENGTH (A)	LENGTH (L)	EXT.(+) INT.(−)	EXT.(+) INT.(−)
60"	30"	90"	96"	85.0	87.5
	33"			81.3	87.5
	36"			78.0	87.5
	39"			74.9	87.5
	42"			72.1	87.5
	48"			67.0	87.5
	54"			62.6	87.5
72"	30"			77.0	87.5
	33"			74.0	87.5
	36"			71.3	87.5
	39"			68.7	87.5
	42"			66.3	87.5
	48"			62.0	87.5
	54"			58.2	87.5
60"	30"	90"	102"	67.0	87.5
	33"			64.3	87.5
	36"			61.8	87.5
	39"			59.5	87.5
	42"			57.3	87.5
	48"			53.5	87.5
	54"			50.1	87.5
72"	30"			60.5	87.5
	33"			58.3	87.5
	36"			56.2	87.5
	39"			54.3	87.5
	42"			52.5	87.5
	48"			49.2	87.5
	54"			46.3	87.5
60"	30"	90"	108"	54.0	87.5
	33"			51.9	87.5
	36"			49.9	87.5
	39"			48.1	87.5
	42"			46.5	87.5
	48"			43.4	87.5
	54"			40.8	85.3
72"	30"			48.5	87.5
	33"			46.8	87.5
	36"			45.2	87.5
	39"			43.7	87.5
	42"			42.4	87.5
	48"			39.8	83.3
	54"			37.6	78.6

MULLION LOAD CAPACITY – PSF AT DOUBLE DOOR WITH TRANSOM

NOMINAL DIMS.				WITHOUT REINFORCING	WITH REINFORCING
WIDTH (W1)	WIDTH (W2)	LENGTH (A)	LENGTH (L)	EXT.(+) INT.(−)	EXT.(+) INT.(−)
60"	30"	90"	114"	44.3	87.5
	33"			42.6	87.5
	36"			41.1	85.9
	39"			39.6	82.9
	42"			38.3	80.1
	48"			35.9	75.0
	54"			33.7	70.6
72"	30"			39.7	83.0
	33"			38.3	80.2
	36"			37.1	77.6
	39"			35.9	75.1
	42"			34.8	72.8
	48"			32.8	68.6
	54"			31.0	64.8
60"	30"	90"	120"	36.9	77.1
	33"			35.5	74.3
	36"			34.3	71.7
	39"			33.1	69.2
	42"			32.0	67.0
	48"			30.0	62.8
	54"			28.3	59.2
72"	30"			33.0	69.0
	33"			31.9	66.8
	36"			30.9	64.6
	39"			29.9	62.6
	42"			29.0	60.7
	48"			27.4	57.3

Engr: DR. HUMAYOUN FAROOQ
STRUCTURES
FLA. PE # 16557
C.A.N. 3538

FEB 2 3 2009

PRODUCT REVISED
as complying with the Florida Building Code
Acceptance No 09-0122-06
Expiration Date 3-18-2014
By Jily Harris
Miami Dade Product Control Division

AL-FAROOQ CORPORATION
ENGINEERS & PRODUCT DEVELOPMENT
1235 S.W. 87 AVE
MIAMI, FLORIDA 33174
TEL. (305) 264-8100 FAX. (305) 262-6978

STORE\98-42AA

IMPACTWALL 3000/L-3000 WINDOW WALL SYS.

ARCH ALUMINUM & GLASS L.C.
10200 N.W. 67th street
TAMARAC, FL. 33321
TEL. (800) 432-8132 FAX. (954) 724-9293

revisions:

no	date	by	description
E	02.02.04		REV. PER BCCO COMMENTS
F	07.22.04		GENERAL REVISION
G	11.08.05		NO CHANGE THIS SHEET
H	01.12.08		NO CHANGE THIS SHEET
I	10.14.08		UPDATED FOR 2007 FBC

date: 12-09-98
scale: 1/2" = 1"
dr. by: HAMID
chk. by:

drawing no.
98-42

MULLION LOAD CAPACITY – PSF AT DOUBLE DOOR WITH TRANSOM

NOMINAL DIMS.				WITHOUT REINFORCING	WITH REINFORCING
WIDTH (W1)	WIDTH (W2)	LENGTH (A)	LENGTH (L)	EXT.(+) INT.(−)	EXT.(+) INT.(−)
60"	30"	84"	90"	87.5	87.5
	33"			87.5	87.5
	36"			87.5	87.5
	39"			87.5	87.5
	42"			87.2	87.5
	48"			81.0	87.5
	54"			75.7	87.5
72"	30"			87.5	87.5
	33"			87.5	87.5
	36"			86.1	87.5
	39"			83.0	87.5
	42"			80.1	87.5
	48"			74.9	87.5
	54"			70.3	87.5
60"	30"	84"	96"	79.8	87.5
	33"			76.6	87.5
	36"			73.7	87.5
	39"			70.9	87.5
	42"			68.4	87.5
	48"			63.8	87.5
	54"			59.8	87.5
72"	30"			72.0	87.5
	33"			69.4	87.5
	36"			66.9	87.5
	39"			64.7	87.5
	42"			62.5	87.5
	48"			58.7	87.5
	54"			55.3	87.5
60"	30"	84"	102"	63.5	87.5
	33"			61.1	87.5
	36"			58.8	87.5
	39"			56.7	87.5
	42"			54.8	87.5
	48"			51.2	87.5
	54"			48.1	87.5
72"	30"			57.1	87.5
	33"			55.1	87.5
	36"			53.2	87.5
	39"			51.5	87.5
	42"			49.9	87.5
	48"			46.9	87.5
	54"			44.3	87.5

MULLION LOAD CAPACITY – PSF AT DOUBLE DOOR WITH TRANSOM

NOMINAL DIMS.				WITHOUT REINFORCING	WITH REINFORCING
WIDTH (W1)	WIDTH (W2)	LENGTH (A)	LENGTH (L)	EXT.(+) INT.(−)	EXT.(+) INT.(−)
60"	30"	84"	108"	51.6	87.5
	33"			49.7	87.5
	36"			47.9	87.5
	39"			46.2	87.5
	42"			44.7	87.5
	48"			41.9	87.5
	54"			39.4	82.4
72"	30"			46.2	87.5
	33"			44.7	87.5
	36"			43.2	87.5
	39"			41.9	87.5
	42"			40.6	84.9
	48"			38.3	80.0
	54"			36.2	75.7
60"	30"	84"	114"	42.6	87.5
	33"			41.1	85.9
	36"			39.6	82.9
	39"			38.3	80.1
	42"			37.1	77.5
	48"			34.8	72.8
	54"			32.8	68.6
72"	30"			38.1	79.7
	33"			36.9	77.1
	36"			35.7	74.7
	39"			34.6	72.4
	42"			33.6	70.3
	48"			31.7	66.3
	54"			30.0	62.8
60"	30"	84"	120"	35.7	74.7
	33"			34.5	72.1
	36"			33.3	69.6
	39"			32.2	67.3
	42"			31.2	65.2
	48"			29.3	61.2
	54"			27.6	57.8
72"	30"			31.9	66.8
	33"			30.9	64.6
	36"			29.9	62.6
	39"			29.0	60.7
	42"			28.2	59.0
	48"			26.6	55.7

MULLION LOAD CAPACITY – PSF AT DOUBLE DOOR WITH TRANSOM

NOMINAL DIMS.				WITHOUT REINFORCING	WITH REINFORCING
WIDTH (W1)	WIDTH (W2)	LENGTH (A)	LENGTH (L)	EXT.(+) INT.(−)	EXT.(+) INT.(−)
60"	30"	80"	90"	87.5	87.5
	33"			87.5	87.5
	36"			87.5	87.5
	39"			87.1	87.5
	42"			83.9	87.5
	48"			78.3	87.5
	54"			73.3	87.5
72"	30"			87.5	87.5
	33"			85.4	87.5
	36"			82.3	87.5
	39"			79.5	87.5
	42"			76.9	87.5
	48"			72.1	87.5
	54"			67.8	87.5
60"	30"	80"	96"	76.9	87.5
	33"			73.9	87.5
	36"			71.1	87.5
	39"			68.5	87.5
	42"			66.2	87.5
	48"			61.9	87.5
	54"			58.1	87.5
72"	30"			69.1	87.5
	33"			66.7	87.5
	36"			64.4	87.5
	39"			62.3	87.5
	42"			60.3	87.5
	48"			56.7	87.5
	54"			53.5	87.5
60"	30"	80"	102"	61.6	87.5
	33"			59.3	87.5
	36"			57.1	87.5
	39"			55.1	87.5
	42"			53.3	87.5
	48"			49.9	87.5
	54"			47.0	87.5
72"	30"			55.2	87.5
	33"			53.3	87.5
	36"			51.6	87.5
	39"			49.9	87.5
	42"			48.4	87.5
	48"			45.6	87.5
	54"			43.1	87.5

MULLION LOAD CAPACITY – PSF AT DOUBLE DOOR WITH TRANSOM

NOMINAL DIMS.				WITHOUT REINFORCING	WITH REINFORCING
WIDTH (W1)	WIDTH (W2)	LENGTH (A)	LENGTH (L)	EXT.(+) INT.(−)	EXT.(+) INT.(−)
60"	30"	80"	108"	50.3	87.5
	33"			48.4	87.5
	36"			46.7	87.5
	39"			45.2	87.5
	42"			43.7	87.5
	48"			41.0	85.8
	54"			38.6	80.8
72"	30"			44.9	87.5
	33"			43.5	87.5
	36"			42.1	87.5
	39"			40.8	85.4
	42"			39.6	82.8
	48"			37.4	78.2
	54"			35.4	74.1
60"	30"	80"	114"	41.7	87.3
	33"			40.2	84.2
	36"			38.9	81.3
	39"			37.6	78.6
	42"			36.4	76.1
	48"			34.2	71.5
	54"			32.2	67.4
72"	30"			37.2	77.9
	33"			36.1	75.4
	36"			34.9	73.1
	39"			33.9	70.9
	42"			32.9	68.9
	48"			31.1	65.1
	54"			29.5	61.7
60"	30"	80"	120"	35.1	73.5
	33"			33.9	70.9
	36"			32.8	68.5
	39"			31.7	66.3
	42"			30.7	64.2
	48"			28.9	60.4
	54"			27.2	57.0
72"	30"			31.3	65.5
	33"			30.3	63.4
	36"			29.4	61.5
	39"			28.5	59.7
	42"			27.7	58.0
	48"			26.2	54.9

Engr: DR. HUMAYOUN FAROOQ
STRUCTURES
FLA. PE # 18557
C.A.N. 3338

FEB 2 3 2009

PRODUCT REVISED
as complying with the Florida Building Code
Acceptance No 09-0122.06
Expiration Date 3.18.2014
By Miami Dade Product Control Division

AL-FAROOQ CORPORATION
ENGINEERS & PRODUCT DEVELOPMENT
1235 S.W. 87 AVE
MIAMI, FLORIDA 33174
TEL. (305) 264-8100 FAX. (305) 262-6978

STORE\98-42AA

IMPACTWALL 3000/L-3000 WINDOW WALL SYS.

ARCH ALUMINUM & GLASS L.C.
10200 N.W. 67th street
TAMARAC, FL. 33321
TEL. (800) 432-8132 FAX. (954) 724-9293

revisions:

no	date	by	description
E	02.02.04		REV. PER BCCO COMMENTS
F	07.22.04		GENERAL REVISION
G	11.08.05		NO CHANGE THIS SHEET
H	01.12.08		NO CHANGE THIS SHEET
I	10.14.08		NO CHANGE THIS SHEET

date: 12-09-98
scale: 1/2" = 1"
dr. by: HAMID
chk. by:

drawing no.
98-42

ANCHOR LOAD CAPACITY – PSF
EXT.(+) & INT.(–)

NOMINAL DIMS.		ANCHORS TYPE 'A'			ANCHORS TYPE 'B'		ANCHORS TYPE 'C'	
WIDTH (W)	FRAME HEIGHT	'A2'	'A3'	'A4'	'B2'	'B3'	'C2'	'C3'
24"	78"	100.0	100.0	100.0	100.0	100.0	100.0	100.0
30"		100.0	100.0	100.0	100.0	100.0	100.0	100.0
36"		100.0	100.0	100.0	100.0	100.0	100.0	100.0
42"		100.0	100.0	100.0	100.0	100.0	100.0	100.0
48"		90.8	100.0	100.0	100.0	100.0	100.0	100.0
54"		80.7	100.0	100.0	100.0	100.0	100.0	100.0
60"		72.6	100.0	100.0	94.5	100.0	97.2	100.0
66"		66.0	99.0	100.0	85.9	100.0	88.4	100.0
72"		60.5	90.8	100.0	78.8	100.0	81.0	100.0
24"	84"	100.0	100.0	100.0	100.0	100.0	100.0	100.0
30"		100.0	100.0	100.0	100.0	100.0	100.0	100.0
36"		100.0	100.0	100.0	100.0	100.0	100.0	100.0
42"		96.3	100.0	100.0	100.0	100.0	100.0	100.0
48"		84.3	100.0	100.0	100.0	100.0	100.0	100.0
54"		74.9	100.0	100.0	97.5	100.0	100.0	100.0
60"		67.4	100.0	100.0	87.8	100.0	90.3	100.0
66"		61.3	91.9	100.0	79.8	100.0	82.1	100.0
72"		56.2	84.3	100.0	73.1	100.0	75.2	100.0
24"	90"	100.0	100.0	100.0	100.0	100.0	100.0	100.0
30"		100.0	100.0	100.0	100.0	100.0	100.0	100.0
36"		100.0	100.0	100.0	100.0	100.0	100.0	100.0
42"		89.9	100.0	100.0	100.0	100.0	100.0	100.0
48"		78.7	100.0	100.0	100.0	100.0	100.0	100.0
54"		69.9	100.0	100.0	91.0	100.0	93.6	100.0
60"		62.9	94.4	100.0	81.9	100.0	84.3	100.0
66"		57.2	85.8	100.0	74.5	100.0	76.6	100.0
72"		52.4	78.7	100.0	68.3	100.0	70.2	100.0
24"	96"	100.0	100.0	100.0	100.0	100.0	100.0	100.0
30"		100.0	100.0	100.0	100.0	100.0	100.0	100.0
36"		98.3	100.0	100.0	100.0	100.0	100.0	100.0
42"		84.3	100.0	100.0	100.0	100.0	100.0	100.0
48"		73.8	100.0	100.0	96.0	100.0	98.8	100.0
54"		65.6	98.3	100.0	85.3	100.0	87.8	100.0
60"		59.0	88.5	100.0	76.8	100.0	79.0	100.0
66"		53.6	80.5	100.0	69.8	100.0	71.8	100.0
72"		49.2	73.8	98.3	64.0	96.0	65.8	98.8
24"	102"	100.0	100.0	100.0	100.0	100.0	100.0	100.0
30"		100.0	100.0	100.0	100.0	100.0	100.0	100.0
36"		92.5	100.0	100.0	100.0	100.0	100.0	100.0
42"		79.3	100.0	100.0	100.0	100.0	100.0	100.0
48"		69.4	100.0	100.0	90.4	100.0	92.9	100.0
54"		61.7	92.5	100.0	80.3	100.0	82.6	100.0
60"		55.5	83.3	100.0	72.3	100.0	74.4	100.0
66"		50.5	75.7	100.0	65.7	98.6	67.6	100.0
72"		46.3	69.4	92.5	60.2	90.4	62.0	92.9
24"	108"	100.0	100.0	100.0	100.0	100.0	100.0	100.0
30"		100.0	100.0	100.0	100.0	100.0	100.0	100.0
36"		87.4	100.0	100.0	100.0	100.0	100.0	100.0
42"		74.9	100.0	100.0	97.5	100.0	100.0	100.0
48"		65.6	98.3	100.0	85.3	100.0	87.8	100.0
54"		58.3	87.4	100.0	75.9	100.0	78.0	100.0
60"		52.4	78.7	100.0	68.3	100.0	70.2	100.0
66"		47.7	71.5	95.4	62.1	93.1	63.8	95.8

ANCHOR LOAD CAPACITY – PSF
EXT.(+) & INT.(–)

NOMINAL DIMS.		ANCHORS TYPE 'A'			ANCHORS TYPE 'B'		ANCHORS TYPE 'C'	
WIDTH (W)	FRAME HEIGHT	'A2'	'A3'	'A4'	'B2'	'B3'	'C2'	'C3'
24"	114"	100.0	100.0	100.0	100.0	100.0	100.0	100.0
30"		99.4	100.0	100.0	100.0	100.0	100.0	100.0
36"		82.8	100.0	100.0	100.0	100.0	100.0	100.0
42"		71.0	100.0	100.0	92.4	100.0	95.0	100.0
48"		62.1	93.2	100.0	80.8	100.0	83.2	100.0
54"		55.2	82.8	100.0	71.9	100.0	73.9	100.0
60"		49.7	74.5	99.4	64.7	97.0	66.5	99.8
24"	120"	100.0	100.0	100.0	100.0	100.0	100.0	100.0
30"		94.4	100.0	100.0	100.0	100.0	100.0	100.0
36"		78.7	100.0	100.0	100.0	100.0	100.0	100.0
42"		67.4	100.0	100.0	87.8	100.0	90.3	100.0
48"		59.0	88.5	100.0	76.8	100.0	79.0	100.0
54"		52.4	78.7	100.0	68.3	100.0	70.2	100.0
60"		47.2	70.8	94.4	61.4	92.2	63.2	94.8

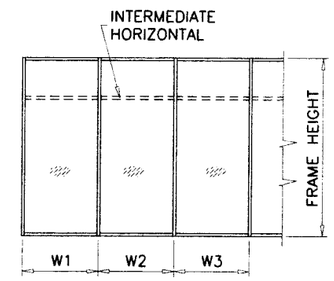

WIDTH (W) = W1
AT FRAME JAMB

WIDTH (W) = $\frac{W2 + W3}{2}$
AT FRAME MULLION

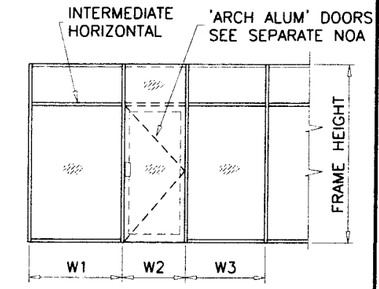

WIDTH (W) = W1
AT FRAME JAMB

WIDTH (W) = $\frac{W2 + W3}{2}$
AT FRAME MULLION

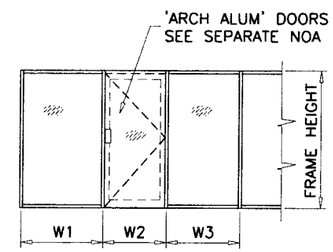

WIDTH (W) = W1
AT FRAME JAMB

WIDTH (W) = $\frac{W2 + W3}{2}$
AT FRAME MULLION

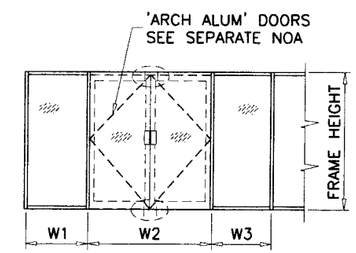

WIDTH (W) = W1
AT FRAME JAMB

WIDTH (W) = $\frac{W2 + W3}{2}$
AT FRAME MULLION

ANCHORS TYPES: SEE SHEET 9 FOR DESCRIPTION

A2 = (2) ANCHORS TYPE 'A' AT JAMB OR EACH SIDE OF MULLION
A3 = (3) ANCHORS TYPE 'A' AT JAMB OR EACH SIDE OF MULLION
A4 = (4) ANCHORS TYPE 'A' AT JAMB OR EACH SIDE OF MULLION

B2 = (2) ANCHORS TYPE 'B' AT JAMB OR EACH SIDE OF MULLION
B3 = (3) ANCHORS TYPE 'B' AT JAMB OR EACH SIDE OF MULLION

C2 = (2) ANCHORS TYPE 'C' AT JAMB OR EACH SIDE OF MULLION
C3 = (3) ANCHORS TYPE 'C' AT JAMB OR EACH SIDE OF MULLION

ALL OTHER ANCHORS TO BE SPACED AS PER ELEVATION.

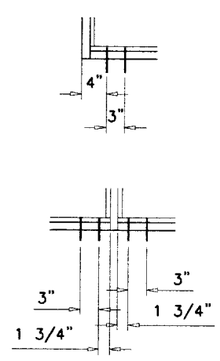

A2, B2, C2

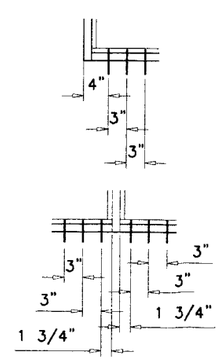

A3, B3, C3

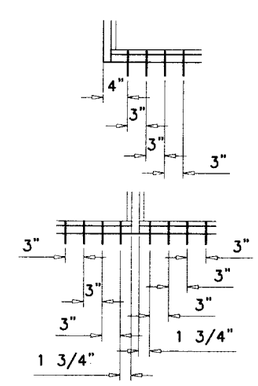

A4

Engr: DR. HUMAYOUN FAROOQ
STRUCTURES
FLA. PE # 16557
C.A.N. 3538

FEB 23 2009

PRODUCT REVISED
as complying with the Florida Building Code
Acceptance No 09-0122-06
Expiration Date 3-18-2014
By Hamid
Miami Dade Product Control Division

AL-FAROOQ CORPORATION
ENGINEERS & PRODUCT DEVELOPMENT
1235 S.W. 87 AVE
MIAMI, FLORIDA 33174
TEL. (305) 264-8100 FAX. (305) 262-6978

STORE 98-42AA

IMPACTWALL 3000/L-3000 WINDOW WALL SYS.

ARCH ALUMINUM & GLASS L.C.
10200 N.W. 67th street
TAMARAC, FL. 33321
TEL. (800) 432-8132 FAX. (954) 724-9293

revisions:

no	date	by	description
E	02.02.04		REV. PER BCCO COMMENTS
F	07.22.04		GENERAL REVISION
G	11.08.05		NO CHANGE THIS SHEET
H	01.12.08		CHART REV.
I	10.14.08		UPDATED FOR 2007 FBC

date: 12-09-98
scale: 1/2" = 1"
dr. by: HAMID
chk. by:

drawing no.
98-42

EXTERIOR OR INTERIOR

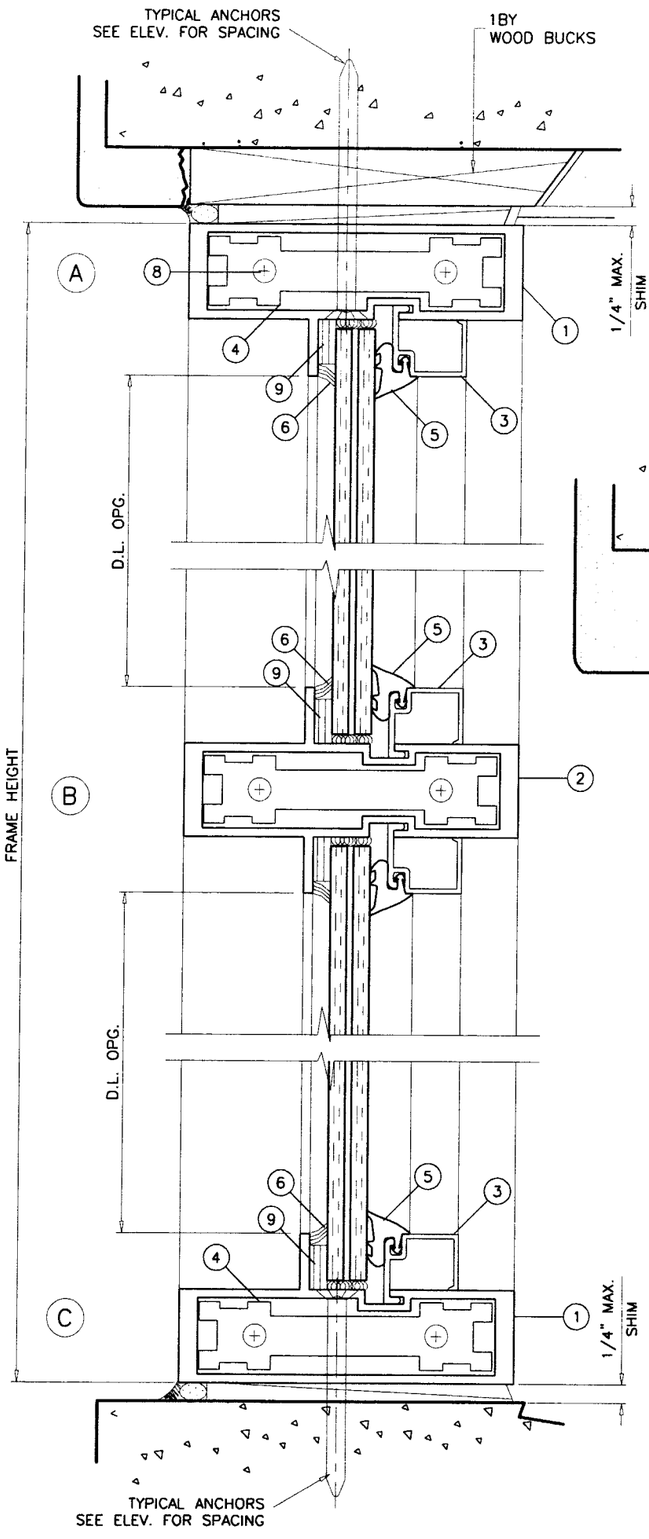

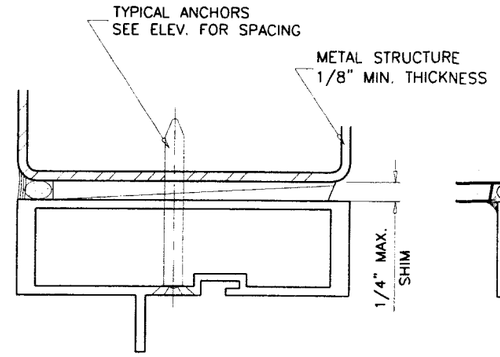

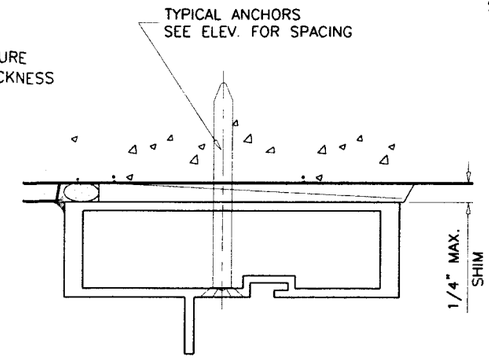

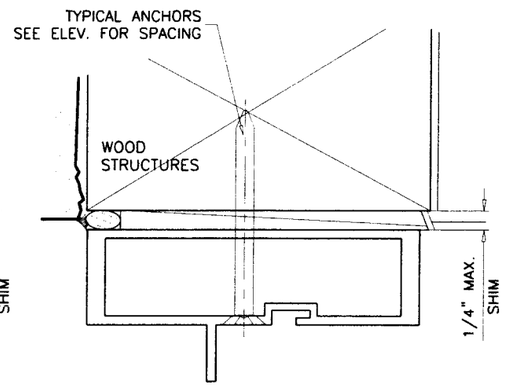

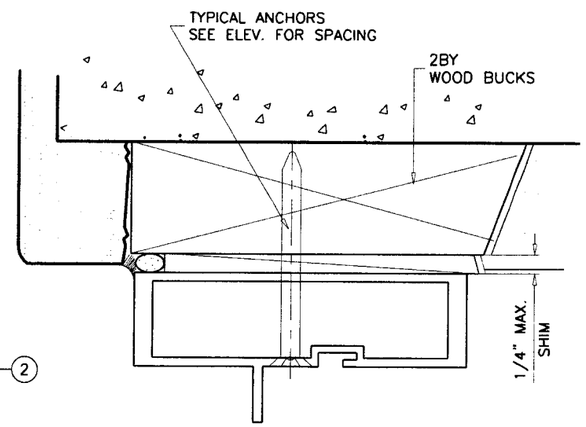

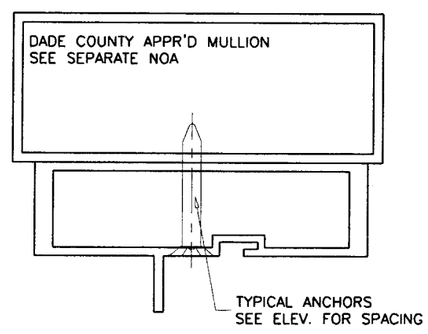

WOOD BUCKS AND METAL STRUCTURE NOT BY ARCH ALUM. MUST SUSTAIN LOADS IMPOSED BY GLAZING SYSTEM AND TRANSFER THEM TO THE BUILDING STRUCTURE.

TYPICAL ANCHORS: SEE ELEV. FOR SPACING

TYPE 'A'– 1/4" DIA. ULTRACON BY 'ELCO' (Fu=177 KSI, Fy=155 KSI)
INTO 2BY WOOD BUCKS OR WOOD STRUCTURES
1–1/2" MIN. PENETRATION INTO WOOD

THRU 1BY BUCKS INTO CONC. OR MASONRY
1–1/4" MIN. EMBED INTO CONC. OR MASONRY

TYPE 'B'– 1/4" DIA. ULTRACON BY 'ELCO' (Fu=177 KSI, Fy=155 KSI)
DIRECTLY INTO CONC. OR MASONRY
1–5/8" MIN. EMBED INTO CONC. OR MASONRY

TYPE 'C'– #14 SMS OR SELF DRILLING SCREWS (GRADE 2 CRS)
INTO METAL STRUCTURES
STEEL : 12 GA. MIN. (Fy = 36 KSI MIN.)
ALUMINUM : 1/8" THK. MIN. (6063–T5 MIN.)
(STEEL IN CONTACT WITH ALUMINUM TO BE PLATED OR PAINTED)

TYPICAL EDGE DISTANCE

INTO CONCRETE AND MASONRY = 2–1/2" MIN.
INTO WOOD STRUCTURE = 1" MIN.
INTO METAL STRUCTURE = 3/4" MIN.

CONCRETE f'c = 3000 PSI MIN.
MASONRY f'm = 1500 PSI MIN.

SEALANTS:

GLAZING BEAD AT FRAME SILL SEALED TO GLASS WITH DOW CORNING 995.
FRAME CORNERS SEALED WITH DOW CORNING 999.

THIS PRODUCT MAY BE INSTALLED INSIDE OR OUTSIDE GLAZED

Eng.: DR. HUMAYOUN FAROOQ
STRUCTURES
FLA. PE # 16557
C.A.N. 3538

FEB 23 2009

PRODUCT REVISED
as complying with the Florida Building Code
Acceptance No 09-0122.06
Expiration Date 3.18.2014
By Rita Harris
Miami Dade Product Control Division

AL-FAROOQ CORPORATION
ENGINEERS & PRODUCT DEVELOPMENT
1235 S.W. 87 AVE
MIAMI, FLORIDA 33174
TEL. (305) 264-8100 FAX. (305) 262-6978

STORE\98-42AA

IMPACTWALL 3000/L-3000 WINDOW WALL SYS.

ARCH ALUMINUM & GLASS L.C.
10200 N.W. 67th street
TAMARAC, FL. 33321
TEL. (800) 432-8132 FAX. (954) 724-9293

revisions:

no	date	by	description
E	02.02.04		REV. PER BCCO COMMENTS
F	07.22.04		GENERAL REVISION
G	11.08.05		METAL EDGE DIST. ADDED
H	01.12.08		NO CHANGE THIS SHEET
I	10.14.08		UPDATED FOR 2007 FBC

date: 12-09-98
scale: 1/2" = 1"
dr. by: HAMID
chk. by:

drawing no.
98-42

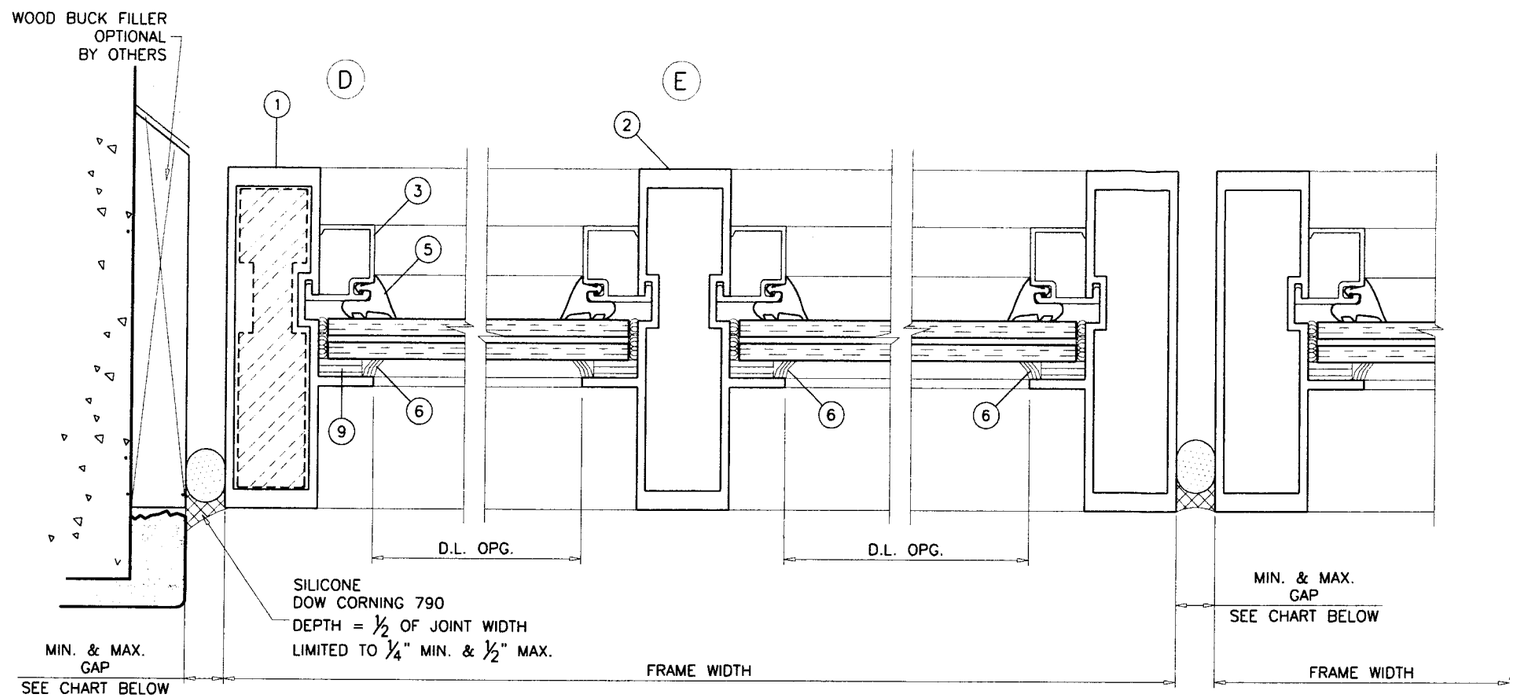

EXTERIOR OR INTERIOR

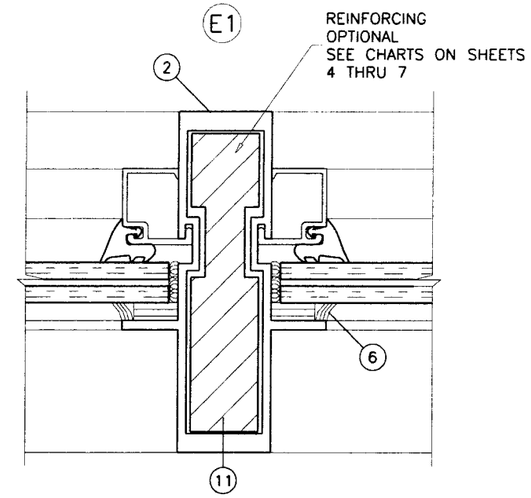

MAX. FRAME HEIGHT	GAP	
	MIN.	MAX.
60"	3/16"	1/2"
72"	1/4"	1/2"
84"	1/4"	1/2"
96"	3/8"	1/2"
108"	3/8"	1/2"
120"	1/2"	1/2"

MAX. FRAME WIDTH	MAX. GAP AT EACH SIDE
30 FT.	1/4"
60 FT.	1/2"

ALTERNATE SEALANTS AT JAMB GAPS CAN BE DESIGNED BY ENGINEER OF RECORD BASED ON MANUFACTURER GUIDE LINES.

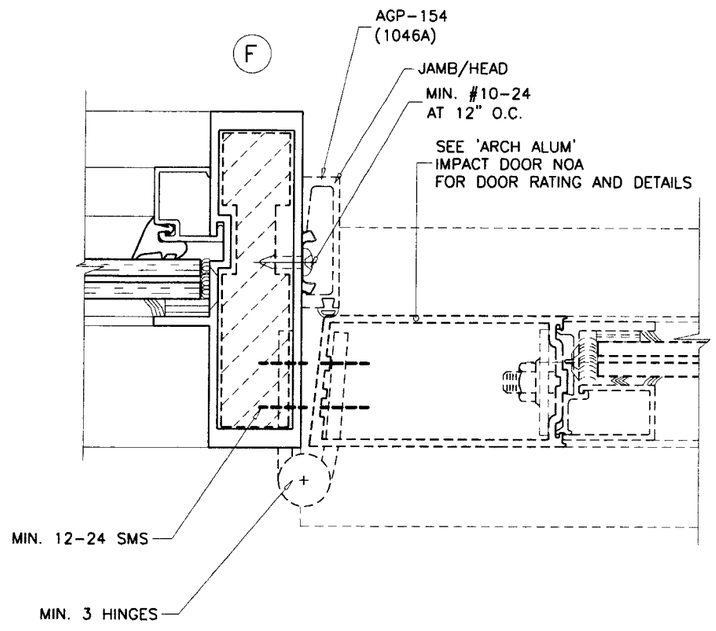

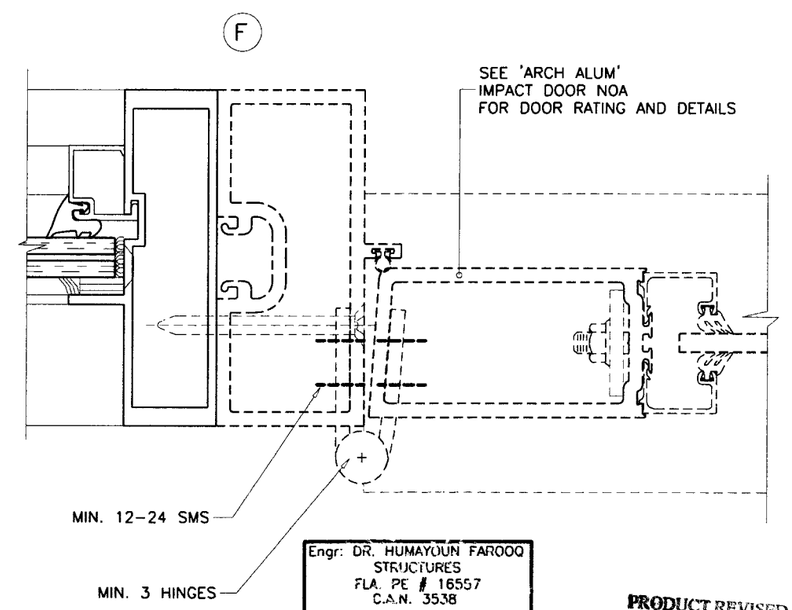

Engr: DR. HUMAYOUN FAROOQ
STRUCTURES
FLA. PE # 16557
C.A.N. 3538

FEB 2 3 2009

PRODUCT REVISED
as complying with the Florida
Building Code
Acceptance No 09-0122.06
Expiration Date 3.18.2014
By Hamid Harris
Miami Dade Product Control
Division

AL-FAROOQ CORPORATION
ENGINEERS & PRODUCT DEVELOPMENT
1235 S.W. 87 AVE
MIAMI, FLORIDA 33174
TEL. (305) 264-8100 FAX. (305) 262-6978

STORE\98-42AA

IMPACTWALL 3000/L-3000 WINDOW WALL SYS.

ARCH ALUMINUM & GLASS L.C.
10200 N.W. 67th street
TAMARAC, FL. 33321
TEL. (800) 432-8132 FAX. (954) 724-9293

revisions:

no	date	by	description
E	02.02.04		REV. PER BCCO COMMENTS
F	07.22.04		GENERAL REVISION
G	11.08.05		DTL. NO. REV.
H	01.12.08		NO CHANGE THIS SHEET
I	10.14.08		NO CHANGE THIS SHEET

date: 12-09-98
scale: 1/2" = 1"
dr. by: HAMID
chk. by:

drawing no.
98-42

sheet 10 of 11

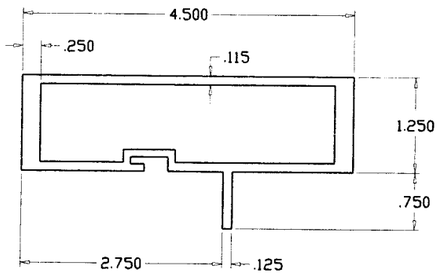

(1) FRAME HEAD/SILL/JAMB

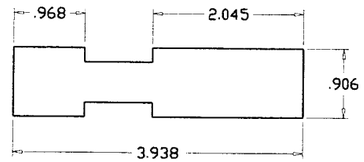

(11) REINFORCEMENT

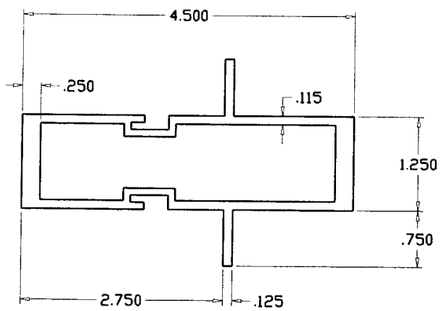

(2) FRAME INTERMEDIATE MULLION

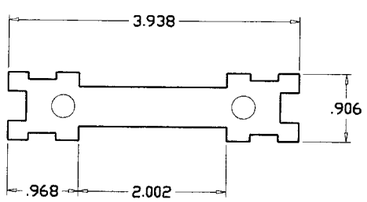

(4) SHEAR BLOCK

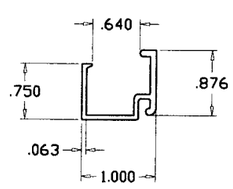

(3) GLAZING STOP

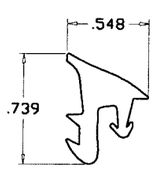

(5) WEDGE-IN GASKET

MATERIALS LIST

ITEM NO.	PART NUMBER	QUANTITY	DESCRIPTION	MATERIAL	MANF./SUPPLIER/REMARKS
1	3001 (AGA-356)	AS REQD.	FRAME HEAD/SILL/JAMB	6063-T6	ARCH ALUM & GLASS CO.
2	3002	AS REQD.	INTERMEDIATE MULLION (VERT./HORIZ.)	6063-T6	ARCH ALUM & GLASS CO.
3	3003	AS REQD.	GLAZING STOP	6063-T6	ARCH ALUM & GLASS CO.
4	AR-3004	1/ CORNER	SHEAR BLOCK	6063-T5	1" LONG
5	H-63	AS REQD.	GLAZING GASKET	EPDM 70 ±5	UNIVERSAL RUBBER CO.
6	DC995	AS REQD.	GLAZING COMPOUND	SILICONE	DOW CORNING
7	#12-24 X 3/4"	2/ CORNER	FLAT HEAD THREAD CUTTING SCREWS	–	–
8	1/4-20 X 1-1/2"	2/ CORNER	PAN HEAD MACHINE SCREWS	–	–
9	V2100	–	ADHESIVE FOAM TAPE	–	NORTON
9A	V2200	–	ADHESIVE FOAM TAPE	–	SAINT GOBAIN PLASTICS
10	–	AS REQD.	SETTING BLOCK (1/2" X 1/8" X 2" LONG)	NEOPRENE	NORTON
10A	H62D	AS REQD.	SETTING BLOCK (1/2" X 1/4" X 2" LONG)	NEOPRENE	NORTON
11	3004A	AS REQD.	ALUMINUM REINFORCEMENT	6063-T6	ARCH ALUM & GLASS CO.

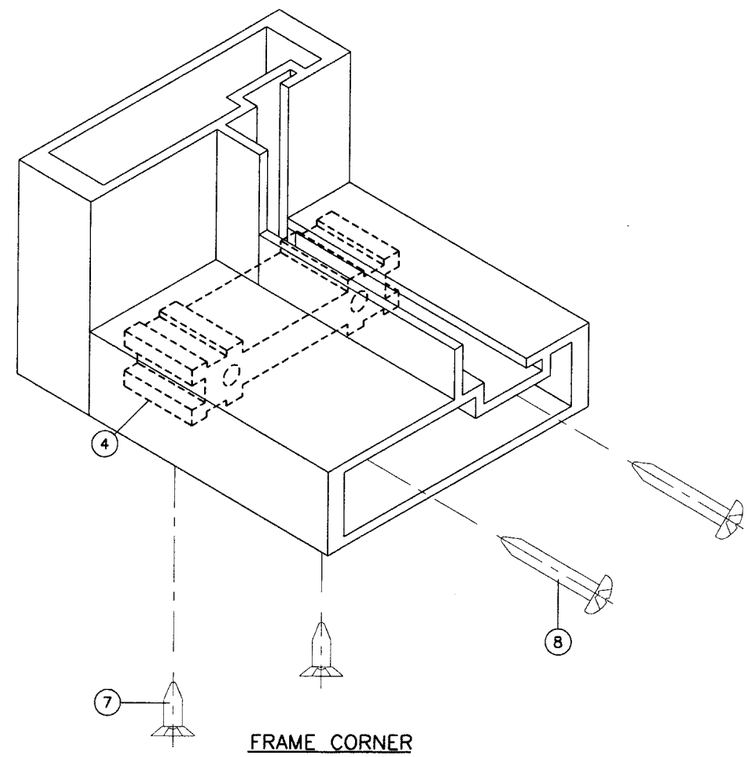

FRAME CORNER
HEAD & SILL
INTER. HORIZ. MULLION

Engr: DR. HUMAYOUN FAROOQ
STRUCTURES
FLA. PE # 16557
C.A.N. 3538

FEB 23 2009

PRODUCT REVISED
as complying with the Florida
Building Code
Acceptance No 09-0122.06
Expiration Date 3-18-2014
By
Miami Dade Product Control
Division

AL-FAROOQ CORPORATION
ENGINEERS & PRODUCT DEVELOPMENT
1235 S.W. 87 AVE
MIAMI, FLORIDA 33174
TEL. (305) 264-8100 FAX. (305) 262-6978

STORE 98-42AA

IMPACTWALL 3000/L-3000 WINDOW WALL SYS.

ARCH ALUMINUM & GLASS L.C.
10200 N.W. 67th street
TAMARAC, FL. 33321
TEL. (800) 432-8132 FAX. (954) 724-9293

revisions:

no	date	by	description
E	02.02.04		REV. PER BCCO COMMENTS
F	07.22.04		GENERAL REVISION
G	11.08.05		ALLOY REV.
H	01.12.08		MATERIAL LIST REV.
I	10.14.08		NO CHANGE THIS SHEET

date: 12-09-98
scale: 1/2" = 1"
dr. by: HAMID
chk. by:

drawing no.
98-42

sheet 11 of 11