MIAMI-DADE COUNTY
BUILDING CODE COMPLIANCE OFFICE (BCCO)
PRODUCT CONTROL DIVISION

MIAMI-DADE COUNTY, FLORIDA
METRO-DADE FLAGLER BUILDING
140 WEST FLAGLER STREET, SUITE 1603
MIAMI, FLORIDA 33130-1563
(305) 375-2901 FAX (305) 372-6339
www.miamidade.gov/buildingcode

NOTICE OF ACCEPTANCE (NOA)

R.C. Aluminum Industries, Inc.
2805 N.W. 75th Avenue
Miami, FL 33122

SCOPE:

This NOA is being issued under the applicable rules and regulations governing the use of construction materials. The documentation submitted has been reviewed by Miami-Dade County Product Control Division and accepted by the Board of Rules and Appeals (BORA) to be used in Miami Dade County and other areas where allowed by the Authority Having Jurisdiction (AHJ).

This NOA shall not be valid after the expiration date stated below. The Miami-Dade County Product Control Division (In Miami Dade County) and/or the AHJ (in areas other than Miami Dade County) reserve the right to have this product or material tested for quality assurance purposes. If this product or material fails to perform in the accepted manner, the manufacturer will incur the expense of such testing and the AHJ may immediately revoke, modify, or suspend the use of such product or material within their jurisdiction. BORA reserves the right to revoke this acceptance, if it is determined by Miami-Dade County Product Control Division that this product or material fails to meet the requirements of the applicable building code. This product is approved as described herein, and has been designed to comply with the Florida Building Code, including the High Velocity Hurricane Zone.

DESCRIPTION: Series "RS-240" Aluminum Sliding Glass Door – L.M.I.

APPROVAL DOCUMENT: Drawing No. **W03-101**, titled "Series – RS240 Alum. Sliding Glass Door (LMI)", sheets 1 through 8 of 8, dated 11/10/03 with revision **"D"** dated 03/04/09 prepared by Al-Farooq Corporation, signed and sealed by Humayoun Farooq, P.E., bearing the Miami-Dade County Product Control Revision stamp with the Notice of Acceptance number and expiration date by the Miami-Dade County Product Control Division.

MISSILE IMPACT RATING: Large and Small Missile Impact Resistant

LABELING: Each unit shall bear a permanent label with the manufacturer's name or logo, city, state and following statement: "Miami-Dade County Product Control Approved", unless otherwise noted herein.

RENEWAL of this NOA shall be considered after a renewal application has been filed and there has been no change in the applicable building code negatively affecting the performance of this product.

TERMINATION of this NOA will occur after the expiration date or if there has been a revision or change in the materials, use, and/or manufacture of the product or process. Misuse of this NOA as an endorsement of any product, for sales, advertising or any other purposes shall automatically terminate this NOA. Failure to comply with any section of this NOA shall be cause for termination and removal of NOA.

ADVERTISEMENT: The NOA number preceded by the words Miami-Dade County, Florida, and followed by the expiration date may be displayed in advertising literature. If any portion of the NOA is displayed, then it shall be done in its entirety.

INSPECTION: A copy of this entire NOA shall be provided to the user by the manufacturer or its distributors and shall be available for inspection at the job site at the request of the Building Official.

This NOA **revises and renews NOA # 05-0815.15** consists of this page 1 and evidence pages E-1 and E-2, as well as approval document mentioned above.

The submitted documentation was reviewed by **Manuel Perez, P.E.**

MIAMI-DADE COUNTY APPROVED

R.C. Aluminum Industries, Inc.

NOTICE OF ACCEPTANCE: EVIDENCE SUBMITTED

A. DRAWINGS

1. Manufacturer's die drawings and sections.
2. Drawing No **W03-101**, Sheets 1 through 8 of 18, titled "Series – RS240 Alum. Sliding Glass Door (LMI)", dated 11/10/03 with revision **"D"** dated 03/04/09 prepared by Al-Farooq Corporation, signed and sealed by Humayoun Farooq, P.E.

B. TESTS

1. Test reports on: 1) Air Infiltration Test, per FBC, TAS 202-94
   2) Uniform Static Air Pressure Test, Loading per FBC, TAS 20294
   3) Water Resistance Test, per FBC, TAS 202-94
   4) Large Missile Impact Test per FBC, TAS 201-94
   5) Cyclic Wind Pressure Loading per FBC, TAS 203-94
   6) Forced Entry Test, per FBC 2411.3.2.1 and TAS 202-94

   along with marked-up drawings and installation diagram of an aluminum sliding glass door, prepared by Fenestration Testing Laboratories, Inc. Test Report No. **FTL-5427** dated 12/13/07, signed and sealed by Carlos S. Rionda, P.E.
2. Test reports on: 1) Air Infiltration Test, per FBC, TAS 202-94
   2) Uniform Static Air Pressure Test, Loading per FBC, TAS 20294
   3) Water Resistance Test, per FBC, TAS 202-94
   4) Large Missile Impact Test per FBC, TAS 201-94
   5) Cyclic Wind Pressure Loading per FBC, TAS 203-94
   6) Forced Entry Test, per FBC 2411.3.2.1 and TAS 202-94

   along with marked-up drawings and installation diagram of an aluminum sliding glass door, prepared by Fenestration Testing Laboratories, Inc. Test Report No. **FTL-4428** dated 01/11/05, signed and sealed by Edmundo Largaespada, P.E.
   "Submitted under NOA# 05-0815.15"
3. Test reports on: 1) Air Infiltration Test, per FBC, TAS 202-94
   2) Uniform Static Air Pressure Test, Loading per FBC, TAS 20294
   3) Water Resistance Test, per FBC, TAS 202-94
   4) Large Missile Impact Test per FBC, TAS 201-94
   5) Cyclic Wind Pressure Loading per FBC, TAS 203-94
   6) Forced Entry Test, per FBC 2411.3.2.1 and TAS 202-94

   along with marked-up drawings and installation diagram of an aluminum sliding glass door, prepared by Fenestration Testing Laboratories, Inc. Test Report No. **FTL-3825** dated 07/16/03, signed and sealed by Joseph C. Chan, P.E.
   "Submitted under NOA# 04-0401.03"

Manuel Perez, P.E.
Product Control Examiner
NOA No. 09-0324.02
Expiration Date: June 24, 2014
Approval Date: May 27, 2009

NOTICE OF ACCEPTANCE: EVIDENCE SUBMITTED

C. CALCULATIONS

1. Anchor verification calculations and structural analysis, complying with FBC-2007, prepared by Al-Farooq Corporation, dated 2/26/09, signed and sealed by Humayoun Farooq, P.E.
   Complies with ASTM E1300-04

D. QUALITY ASSURANCE

1. Miami Dade Building Code Compliance Office (BCCO).

E. MATERIAL CERTIFICATIONS

1. Notice of Acceptance No. **09-0312.02** issued to E.I. DuPont DeNemours & Co., Inc. for their "**DuPont Butacite® PVB, Interlayer**" dated 05/13/09, expiring on 12/11/10.

E. STATEMENTS

1. Statement letter of conformance, dated February 26th, 2009, signed and sealed by Humayoun Farooq, P.E.
2. Statement letter of no financial interest, dated February 26th, 2009, signed and sealed by Humayoun Farooq, P.E.

G. OTHERS

1. Notice of Acceptance No. **05-0815.15**, issued to R.C. Aluminum Industries, Inc. for their Series "RS240" Aluminum Sliding Glass Door – L.M.I., approved on 02/09/06 and expiring on 05/27/09.

Manuel Perez

Manuel Perez, P.E.
Product Control Examiner
NOA No. 09-0324.02
Expiration Date: June 24, 2014
Approval Date: May 27, 2009

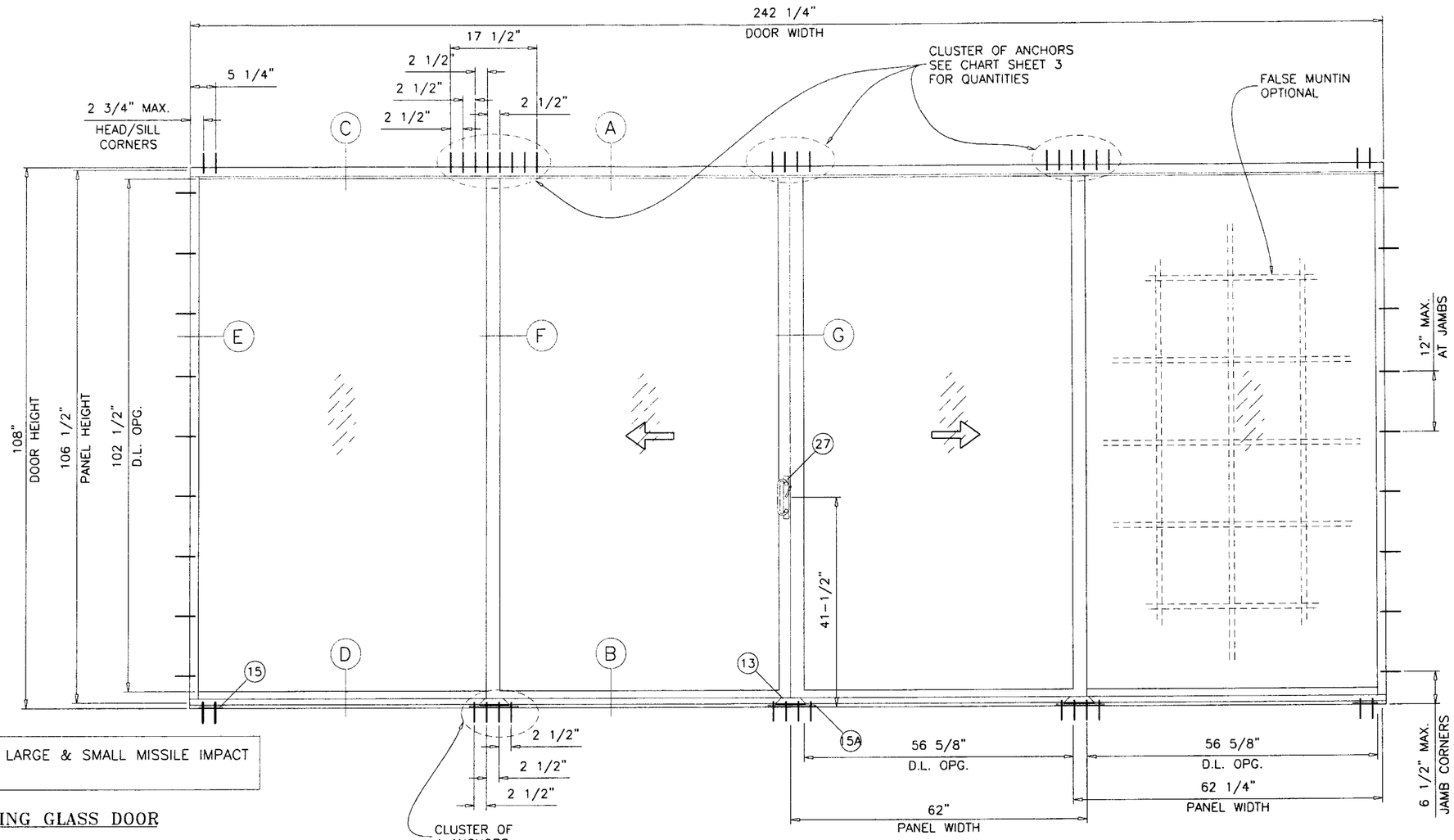

TYPICAL ELEVATION
TESTED UNIT

THESE DOORS ARE RATED FOR LARGE & SMALL MISSILE IMPACT AND REQUIRE NO SHUTTERS.

SERIES-RS240 ALUM SLIDING GLASS DOOR

DESIGN LOAD RATING FOR DOORS TO BE AS PER CHART SHOWN ON SHEET 2.

USING CHART ON SHEET 3 SELECT ANCHOR OPTION WITH DESIGN RATING MORE THAN DESIGN LOADS REQUIRED.

LOWER DESIGN PRESSURES FROM GLASS OR ANCHOR CHARTS WILL APPLY TO ENTIRE SYSTEM.

THIS PRODUCT HAS BEEN DESIGNED AND TESTED TO COMPLY WITH THE REQUIREMENTS OF THE FLORIDA BUILDING CODE 2004/2007 EDITION INCLUDING HIGH VELOCITY HURRICANE ZONE (HVHZ).

WOOD BUCKS BY OTHERS, MUST BE ANCHORED PROPERLY TO TRANSFER LOADS TO THE STRUCTURE.

ANCHORS SHALL BE AS LISTED, SPACED AS SHOWN ON DETAILS, ANCHORS EMBEDMENT TO BASE MATERIAL SHALL BE BEYOND WALL DRESSING OR STUCCO.

ANCHORING OR LOADING CONDITIONS NOT SHOWN IN THESE DETAILS ARE NOT PART OF THIS APPROVAL.

A LOAD DURATION INCREASE IS USED IN DESIGN OF ANCHORS INTO WOOD ONLY.

MATERIALS INCLUDING BUT NOT LIMITED TO STEEL/METAL SCREWS, THAT COME INTO CONTACT WITH OTHER DISSIMILAR MATERIALS SHALL MEET THE REQUIREMENTS OF 2004/2007 FLORIDA BLDG. CODE SECTION 2003.8.4.

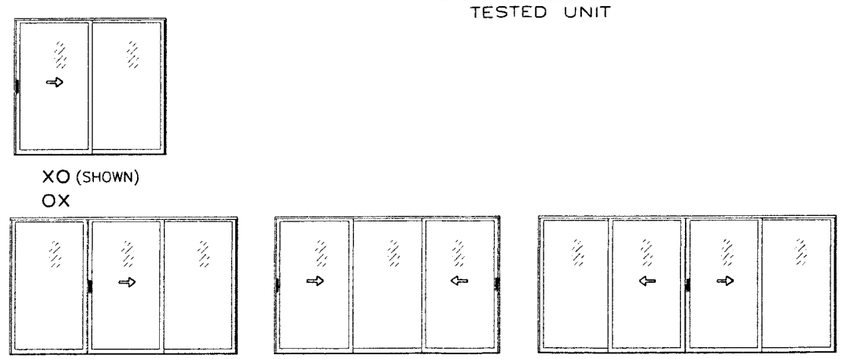

APPROVED CONFIGURATIONS

DOOR CONFIGURATIONS OF MORE THAN FOUR PANELS USING STILE COMBINATIONS SHOWN IN THESE DETAILS MAY ALSO BE APPROVED (EXAMPLE OOXXOO).

LAMINATED GLASS
LAMINATED INSUL. GLASS
LARGE MISSILE IMPACT

Engr: DR. HUMAYOUN FAROOQ
STRUCTURES
FLA. PE # 16557
C.A.N. 3538

MAR 1 0 2009

PRODUCT REVISED
as complying with the Florida Building Code
Acceptance No 09-0324.02
Expiration Date MAY 27, 2014
By
Miami Dade Product Control Division

AL-FAROOQ CORPORATION
ENGINEERS & PRODUCT DEVELOPMENT
1235 S.W. 87 AVE
MIAMI, FLORIDA 33174
TEL. (305) 264-8100 FAX. (305) 262-6978
COMP-ANL\W03-101RC

SERIES-RS240 ALUM SLIDING GLASS DOOR (L.M.I.)

R.C. ALUMINUM INDUSTRIES INC.
2805 N.W. 75 TH AVE.
MIAMI, FL. 33122
TEL. (305) 592-1515 FAX. (305) 592-2184

revisions:

no	date	by	description
A	08.05.05		UPDATED FOR 2004 FBC
B	11.01.05		NOTE REV.
C	12.01.05		NO CHANGE THIS SHEET
D	03.04.09		UPDATED FOR 2007 FBC

date: 11-10-03
scale: 1/2"=1'-0"
dr. by: HAMID
chk. by:

drawing no.
W03-101

DESIGN LOAD CAPACITY – PSF

PANEL WIDTH NOMINAL INCHES	DOOR HEIGHT INCHES	GLASS TYPE 'A' EXT. (+) INT. (–)	GLASS TYPE 'B' EXT. (+) INT. (–)	GLASS TYPE 'C' EXT. (+) INT. (–)
30	80	80.0	80.0	80.0
36		80.0	80.0	80.0
42		80.0	80.0	80.0
48		80.0	80.0	80.0
54		80.0	80.0	80.0
56-1/2		80.0	80.0	80.0
60		80.0	80.0	80.0
66		80.0	80.0	80.0
30	96	80.0	80.0	80.0
36		80.0	80.0	80.0
42		80.0	80.0	80.0
48		80.0	80.0	80.0
54		80.0	80.0	80.0
56-1/2		80.0	80.0	80.0
60		80.0	80.0	80.0
66		80.0	80.0	–
30	102	80.0	80.0	80.0
36		80.0	80.0	80.0
42		80.0	80.0	80.0
48		80.0	80.0	80.0
54		80.0	80.0	80.0
56-1/2		80.0	80.0	80.0
60		80.0	80.0	80.0
30	108	80.0	80.0	80.0
36		80.0	80.0	80.0
42		80.0	80.0	80.0
48		80.0	80.0	80.0
54		80.0	80.0	80.0
56-1/2		80.0	80.0	80.0
60		80.0	80.0	–

ITEM NO.	PART NUMBER	QUANTITY	DESCRIPTION	MATERIAL	MANF./SUPPLIER/REMARKS
1	2400ST-038	1	FRAME HEAD	6005-T5	–
2	2400ST-039	1	FRAME SILL	6005-T5	–
3	2400ST-042	2	FRAME JAMB	6063-T6	–
4	2400ST-028	1/MOV. PANEL	MOVING HORIZ. BOTT. RAIL	6063-T6	–
5	2400ST-029	1/FIX. PANEL	FIXED HORIZ. BOTT. RAIL	6063-T6	–
6	2400ST-026	1/MOV. PANEL	TOP MOVING RAIL	6063-T6	–
7	2400ST-027	1/FIX. PANEL	TOP FIXED RAIL	6063-T6	–
8	2400ST-024	1/FIX. PANEL	JAMB FIXED STILE	6063-T6	–
9	2400ST-022	1	JAMB FIX. STILE/LOCK STILE	6063-T6	–
10	2400ST-041	1/ PANEL	INTERLOCK	6063-T6	–
11	2400ST-025	1	MEETING STILE	6063-T6	–
12	2400ST-012	1	THRESHOLD COVER	6063-T6	–
13	2400ST-011	–	SILL TRACK ANCHOR	6005-T5	6" LONG
14	2400ST-019	1	HEAD COVER	6063-T6	–
15	2400ST-031	2	SILL TRACK PLATE (5-1/4" X 1/4" X 5" LONG	6061-T6	AT EACH END
15A	2400ST-031	3	SILL TRACK PLATE (5-1/4" X 1/4" X 10" LONG	6061-T6	AT INTERLOCK/ASTRAGAL STILES
16	2400ST-032	–	MTG. RAIL THRESHOLD SEAL	6063-T5	6" LONG
17	#10 X 1/2"	2	WEATHERSTRIP FASTENERS	–	–
18	V-027	–	BULB W'STRIPPING	VINYL	FP-712 PROTOTYPE
19	WV-2310	–	FLAP WEATHER SEAL	VINYL	WIBORG
20	V-026	–	BULB W'STRIPPING	VINYL	FP-198 PROTOTYPE
21	W31265NK	–	FIN PILE W'STRIPPING	–	ULTRAFAB
22	Q250X270	–	Q-LON W'STRIPPING	–	SCHLEGEL
26	100-7101	2/MOV. PANEL	TANDEM WHEEL ASSEMBLY	–	WORLD IND. PRODUCTS INTL.
27	10-0018XX	1	STANDARD SLIDE SET LOCK	–	WORLD IND. PRODUCTS INTL.
28	–	1	LOCK KEEPER	–	–
29	–	–	DOOR BUMPER	–	1" DIA. X 3/4" LONG
30	2400ST-040	AS REQD.	INSIDE SCREEN TRACK	6063-T6	–
31	#10 X 1-1/4"	2/ PANEL	PANEL ASSBY. SCREWS	ST/ST	–
32	#10 X 1-1/4"	2/ CORNER	FRAME ASSBY. SCREWS	ST/ST	–
33	–	2	4-1/4" X .060" X 6" LONG PLATE	ALUMINUM	AT FRAME JAMB BOTTOM
34	–	–	5/8" X 1-1/2" X .1" PLATE @ LOCK STILE BOTTOM	ALUMINUM	FASTENED WITH #8 X 3/8" FH SMS
35	V-061	AS REQD.	GLASS CRADLE	PVC	IN SEGMENTS

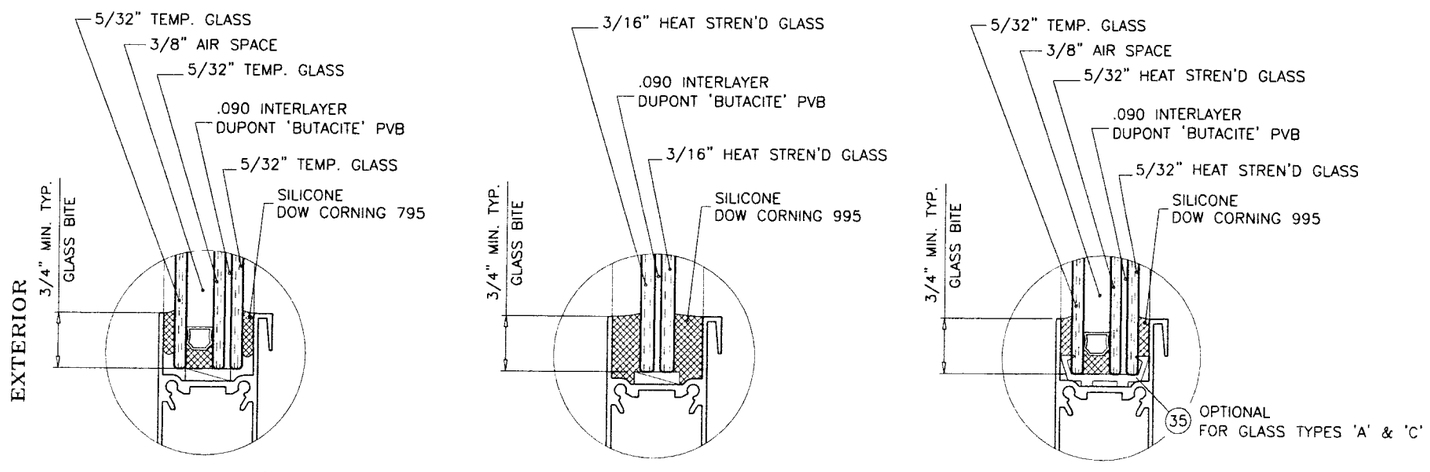

GLAZING OPTIONS

NOTE:
GLASS CAPACITIES ON THIS SHEET ARE BASED ON ASTM E1300-02/04 (3 SEC. GUSTS) AND FLORIDA BUILDING COMMISSION DECLARATORY STATEMENT DCA05-DEC-219

Engr: DR. HUMAYOUN FAROOQ
STRUCTURES
FLA. PE # 16557
C.A.N. 3538

MAR 1 0 2009

PRODUCT REVISED
as complying with the Florida Building Code
Acceptance No 09-0324.02
Expiration Date MAY 27, 2014
By Manuel Perez
Miami/Dade Product Control Division

AL-FAROOQ CORPORATION
ENGINEERS & PRODUCT DEVELOPMENT
1235 S.W. 87 AVE
MIAMI, FLORIDA 33174
TEL. (305) 264-8100 FAX. (305) 262-6978
COMP-ANL\W03-101RC

SERIES-RS240 ALUM SLIDING GLASS DOOR (L.M.I.)

R.C. ALUMINUM INDUSTRIES INC.
2805 N.W. 75 TH AVE.
MIAMI, FL. 33122
TEL. (305) 592-1515 FAX. (305) 592-2184

revisions:

no	date	by	description
A	08.05.05		GLASS CHART ADDED
B	11.01.05		NO CHANGE THIS SHEET
C	12.01.05		NO CHANGE THIS SHEET
D	03.04.09		UPDATED FOR 2007 FBC

date: 11-10-03
scale: 1/2" = 1"
dr. by: HAMID
chk. by:

drawing no. W03-101

DESIGN LOAD CAPACITY – PSF (ANCHORS)

PANEL WIDTH NOMINAL INCHES	DOOR HEIGHT INCHES	3/8" MAX. SHIM SPACE					1/2" MAX. SHIM SPACE					5/8" MAX. SHIM SPACE				
		CLUSTER OF 4 ANCHORS		CLUSTER OF 6 ANCHORS		CLUSTER OF 8 ANCHORS	CLUSTER OF 4 ANCHORS		CLUSTER OF 6 ANCHORS		CLUSTER OF 8 ANCHORS	CLUSTER OF 4 ANCHORS		CLUSTER OF 6 ANCHORS		CLUSTER OF 8 ANCHORS
		ANCHORS A & B	ANCHORS C	ANCHORS A & B	ANCHORS C	ANCHORS C	ANCHORS A & B	ANCHORS C	ANCHORS A & B	ANCHORS C	ANCHORS C	ANCHORS A & B	ANCHORS C	ANCHORS A & B	ANCHORS C	ANCHORS C
		EXT. (+) INT. (–)	EXT. (+) INT. (–)	EXT. (+) INT. (–)	EXT. (+) INT. (–)	EXT. (+) INT. (–)	EXT. (+) INT. (–)	EXT. (+) INT. (–)	EXT. (+) INT. (–)	EXT. (+) INT. (–)	EXT. (+) INT. (–)	EXT. (+) INT. (–)	EXT. (+) INT. (–)	EXT. (+) INT. (–)	EXT. (+) INT. (–)	EXT. (+) INT. (–)
30	80	80.0	80.0	80.0	80.0	80.0	80.0	80.0	80.0	80.0	80.0	80.0	80.0	80.0	80.0	80.0
36		80.0	80.0	80.0	80.0	80.0	80.0	80.0	80.0	80.0	80.0	80.0	70.4	80.0	80.0	80.0
42		80.0	80.0	80.0	80.0	80.0	80.0	71.3	80.0	80.0	80.0	80.0	60.3	80.0	80.0	80.0
48		80.0	76.5	80.0	80.0	80.0	80.0	62.4	80.0	80.0	80.0	80.0	52.8	80.0	79.2	80.0
54		80.0	68.0	80.0	80.0	80.0	80.0	55.5	80.0	80.0	80.0	80.0	46.9	80.0	70.4	80.0
56-1/2		80.0	65.0	80.0	80.0	80.0	80.0	53.0	80.0	79.5	80.0	80.0	44.9	80.0	67.3	80.0
60		80.0	61.2	80.0	80.0	80.0	80.0	49.9	80.0	74.9	80.0	77.0	42.2	80.0	63.4	80.0
66"		80.0	55.6	80.0	80.0	80.0	80.0	45.4	80.0	68.1	80.0	70.0	38.4	80.0	57.6	76.8
30	96	80.0	80.0	80.0	80.0	80.0	80.0	80.0	80.0	80.0	80.0	80.0	70.4	80.0	80.0	80.0
36		80.0	80.0	80.0	80.0	80.0	80.0	69.3	80.0	80.0	80.0	80.0	58.7	80.0	80.0	80.0
42		80.0	72.9	80.0	80.0	80.0	80.0	59.4	80.0	80.0	80.0	80.0	50.3	80.0	75.4	80.0
48		80.0	63.8	80.0	80.0	80.0	80.0	52.0	80.0	78.0	80.0	80.0	44.0	80.0	66.0	80.0
54		80.0	56.7	80.0	80.0	80.0	80.0	46.2	80.0	69.3	80.0	71.3	39.1	80.0	58.7	78.2
56-1/2		80.0	54.2	80.0	80.0	80.0	80.0	44.2	80.0	66.3	80.0	68.2	37.4	80.0	56.1	74.8
60		78.0	51.0	80.0	76.5	80.0	75.8	41.6	80.0	62.4	80.0	64.2	35.2	80.0	52.8	70.4
66"		70.9	46.4	80.0	69.5	80.0	68.9	37.8	80.0	56.7	75.6	58.4	32.0	80.0	48.0	64.0
30	102	80.0	80.0	80.0	80.0	80.0	80.0	78.3	80.0	80.0	80.0	80.0	66.3	80.0	80.0	80.0
36		80.0	80.0	80.0	80.0	80.0	80.0	65.3	80.0	80.0	80.0	80.0	55.2	80.0	80.0	80.0
42		80.0	68.6	80.0	80.0	80.0	80.0	55.9	80.0	80.0	80.0	80.0	47.3	80.0	71.0	80.0
48		80.0	60.0	80.0	80.0	80.0	80.0	48.9	80.0	73.4	80.0	75.5	41.4	80.0	62.1	80.0
54		80.0	53.3	80.0	80.0	80.0	79.3	43.5	80.0	65.3	80.0	67.1	36.8	80.0	55.2	73.6
56-1/2		78.0	51.0	80.0	76.5	80.0	75.8	41.6	80.0	62.4	80.0	64.2	35.2	80.0	52.8	70.4
60		73.4	48.0	80.0	72.0	80.0	71.3	39.2	80.0	58.7	78.3	60.4	33.1	80.0	49.7	66.3
30	108	80.0	80.0	80.0	80.0	80.0	80.0	74.0	80.0	80.0	80.0	80.0	62.6	80.0	80.0	80.0
36		80.0	75.6	80.0	80.0	80.0	80.0	61.6	80.0	80.0	80.0	80.0	52.1	80.0	78.2	80.0
42		80.0	64.8	80.0	80.0	80.0	80.0	52.8	80.0	79.2	80.0	80.0	44.7	80.0	67.0	80.0
48		80.0	56.7	80.0	80.0	80.0	80.0	46.2	80.0	69.3	80.0	71.3	39.1	80.0	58.7	78.2
54		77.0	50.4	80.0	75.6	80.0	74.9	41.1	80.0	61.6	80.0	63.4	34.8	80.0	52.1	69.5
56-1/2		73.6	48.1	80.0	72.2	80.0	71.6	39.3	80.0	58.9	78.5	60.6	33.2	80.0	49.8	66.5
60		69.3	45.3	80.0	68.0	80.0	67.4	37.0	80.0	55.5	74.0	57.1	31.3	80.0	46.9	62.6

Engr. DR. HUMAYOUN FAROOQ
STRUCTURES
FLA. PE # 16557
C.A.N. 3538

MAR 1 0 2009

PRODUCT REVISED
as complying with the Florida Building Code
Acceptance No 09-0324.02
Expiration Date MAY 27, 2014
By Manuel Pera
Miami Dade Product Control Division

AL-FAROOQ CORPORATION
ENGINEERS & PRODUCT DEVELOPMENT
1235 S.W. 87 AVE
MIAMI, FLORIDA 33174
TEL. (305) 264-8100 FAX. (305) 262-6978

COMP-ANL\W03-101RC

SERIES-RS240 ALUM SLIDING GLASS DOOR (L.M.I.)

R.C. ALUMINUM INDUSTRIES INC.
2805 N.W. 75 TH AVE.
MIAMI, FL. 33122
TEL. (305) 592-1515 FAX. (305) 592-2184

revisions:

no	date	by	description
A	08.05.05		CHART REV.
B	11.01.05		NO CHANGE THIS SHEET
C	12.01.05		NO CHANGE THIS SHEET
D	03.04.09		UPDATED FOR 2007 FBC

date: 11-10-03
scale: 1/2" = 1"
dr. by: HAMID
chk. by:

drawing no.
W03-101

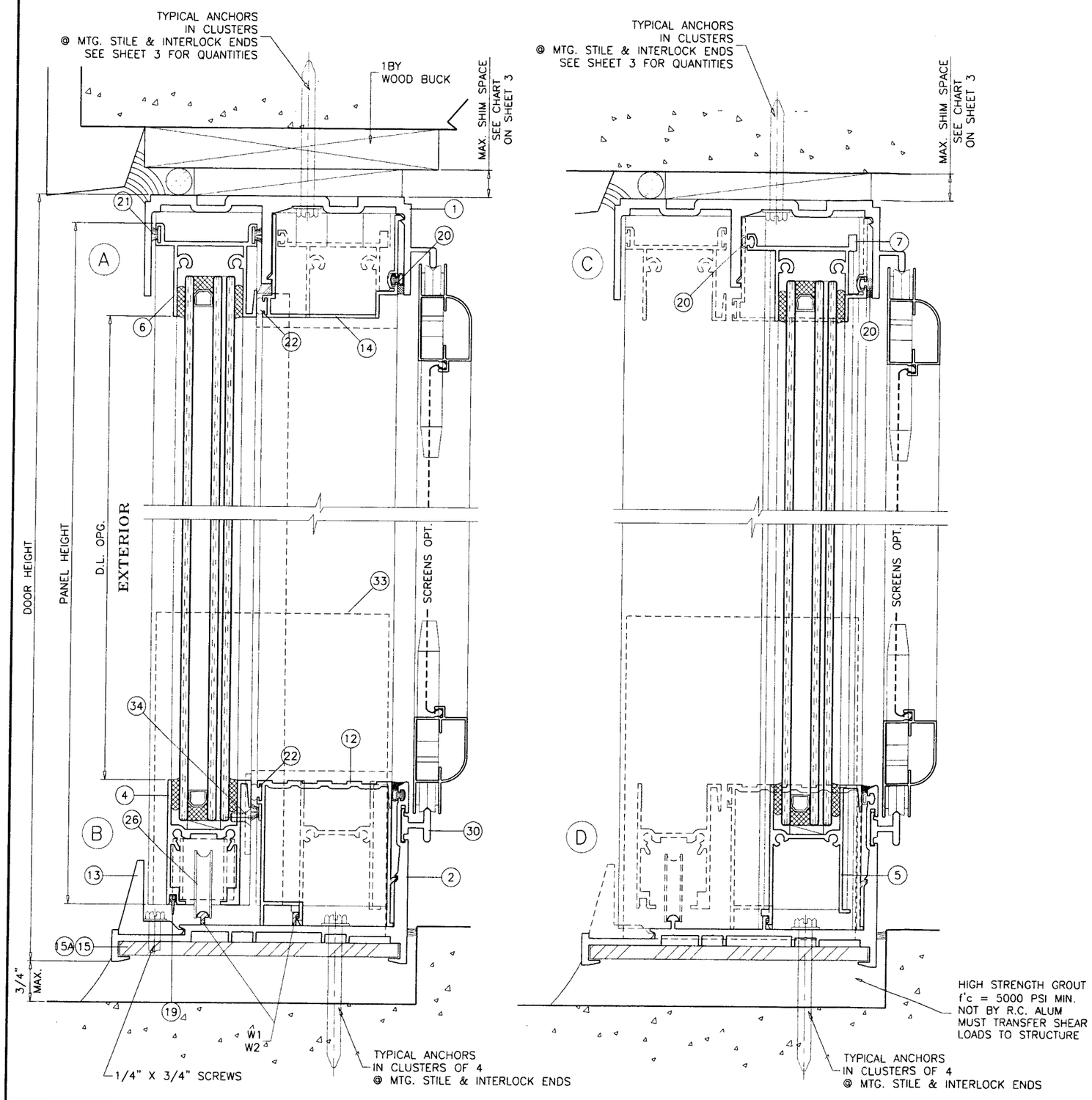

SEALANTS:

ALL FRAME AND PANEL JOINT, INSTALLATION SCREWS AND HEADS OF ANCHOR SCREWS AT SILL TO BE SEALED WITH WHITE/ALUM COLORED SEALANT.

LOCKS:

SURFACE MOUNT THREE PLY HOOK LOCK BY 'WORLD INDUSTRIAL PRODUCTS' AT 41-1/2" FROM BOTTOM WITH KEEPERS AT LOCK POSITION.

WEEPS:

W1 = 2-1/2" WEEP NOTCH AT SILL CENTER
W2 = 7/8" NOTCH AT EACH END

Engr: DR. HUMAYOUN FAROOQ
STRUCTURES
FLA. PE # 16557
C.A.N. 3538

MAR 10 2009

PRODUCT REVISED
as complying with the Florida
Building Code
Acceptance No 09-0324.02
Expiration Date MAY 27, 2014
By Manuel Serra
Miami Dade Product Control
Division

AL-FAROOQ CORPORATION
ENGINEERS & PRODUCT DEVELOPMENT
1235 S.W. 87 AVE
MIAMI, FLORIDA 33174
TEL. (305) 264-8100 FAX. (305) 262-6978
COMP-ANL\W03-101RC

SERIES-RS240 ALUM SLIDING GLASS DOOR (L.M.I.)

R.C. ALUMINUM INDUSTRIES INC.
2805 N.W. 75 TH AVE.
MIAMI, FL. 33122
TEL. (305) 592-1515 FAX. (305) 592-2184

revisions:

no	date	by	description
A	08.05.05		ANCHOR EMBED REV.
B	11.01.05		METAL EDGE DIST. ADDED
C	12.01.05		NO CHANGE THIS SHEET
D	03.04.09		UPDATED FOR 2007 FBC

date: 11-10-03
scale: 1/2" = 1"
dr. by: HAMID
chk. by:

drawing no.
W03-101

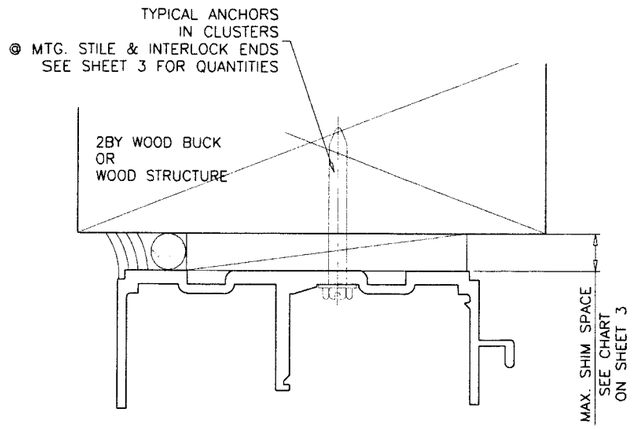

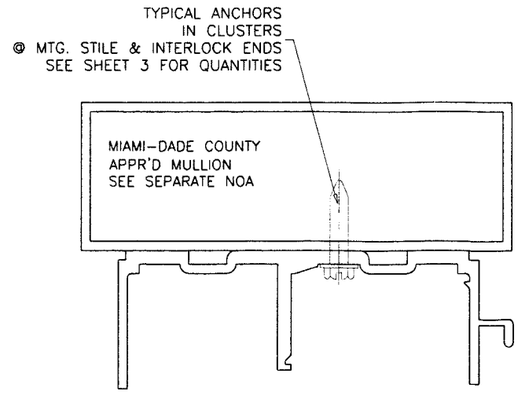

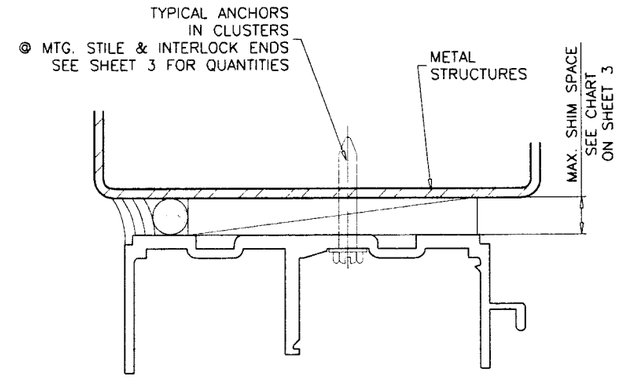

WOOD BUCKS AND METAL STRUCTURES NOT BY RC ALUMINUM, MUST SUSTAIN LOADS IMPOSED BY GLAZING SYSTEM AND TRANSFER THEM TO THE BUILDING STRUCTURE.

TYPICAL ANCHORS: SEE ELEV. FOR SPACING

TYPE 'A' 1/4" DIA. HILTI KWIK-CON II (Fu=163 KSI, Fy=157 KSI)

INTO 2BY WOOD BUCKS OR WOOD STRUCTURES
1-3/8" MIN. WOOD PENETRATION

THRU 1BY WOOD BUCKS INTO MASONRY OR CONC.
1-1/4" MIN. EMBED INTO MASONRY OR CONC.

TYPE 'B' 1/4" DIA. HILTI KWIK-CON II (Fu=163 KSI, Fy=157 KSI)

DIRECTLY INTO MASONRY OR CONCRETE
1-1/2" MIN. EMBED INTO CONCRETE
1-1/4" MIN. EMBED INTO BLOCK

TYPE 'C' 1/4" DIA. TEKS OR SELF DRILLING SCREWS (Fu=92 KSI, Fy=120 KSI)

INTO METAL STRUCTURES

STEEL : 1/8" THK. MIN. (Fy = 36 KSI MIN.)
ALUMINUM : 1/8" THK. MIN. (6063-T5 MIN.)
(STEEL IN CONTACT WITH ALUMINUM TO BE PLATED OR PAINTED)

TYPICAL EDGE DISTANCE

INTO CONCRETE AND MASONRY = 2-1/2" MIN.
INTO WOOD STRUCTURE = 1" MIN.
INTO METAL STRUCTURE = 3/4" MIN.

CONCRETE f'c = 3000 PSI MIN.
MASONRY f'm = 1500 PSI MIN.

PRODUCT REVISED
as complying with the Florida
Building Code
Acceptance No 09-0324.02
Expiration Date MAY 27, 2014
By Manuel Perez
Miami Dade Product Control
Division

Engr: DR. HUMAYOUN FAROOQ
STRUCTURES
FLA. PE # 16557
C.A.N. 3533

MAR 1 0 2009

AL-FAROOQ CORPORATION
ENGINEERS & PRODUCT DEVELOPMENT
1235 S.W. 87 AVE
MIAMI, FLORIDA 33174
TEL. (305) 264-8100 FAX. (305) 262-6978

COMP-ANL\W03-101RC

SERIES-RS240 ALUM SLIDING GLASS DOOR (L.M.I.)

R.C. ALUMINUM INDUSTRIES INC.
2805 N.W. 75 TH AVE.
MIAMI, FL. 33122
TEL. (305) 592-1515 FAX. (305) 592-2184

revisions:

no	date	by	description
D	03.04.09		UPDATED FOR 2007 FBC

date: 11-10-03
scale: 1/2" = 1"
dr. by: HAMID
chk. by:

drawing no.
W03-101

WOOD BUCKS AND METAL STRUCTURES NOT BY RC ALUMINUM MUST SUPPORT LOADS IMPOSED BY GLAZING SYSTEM AND TRANSFER THEM TO THE BUILDING STRUCTURE.

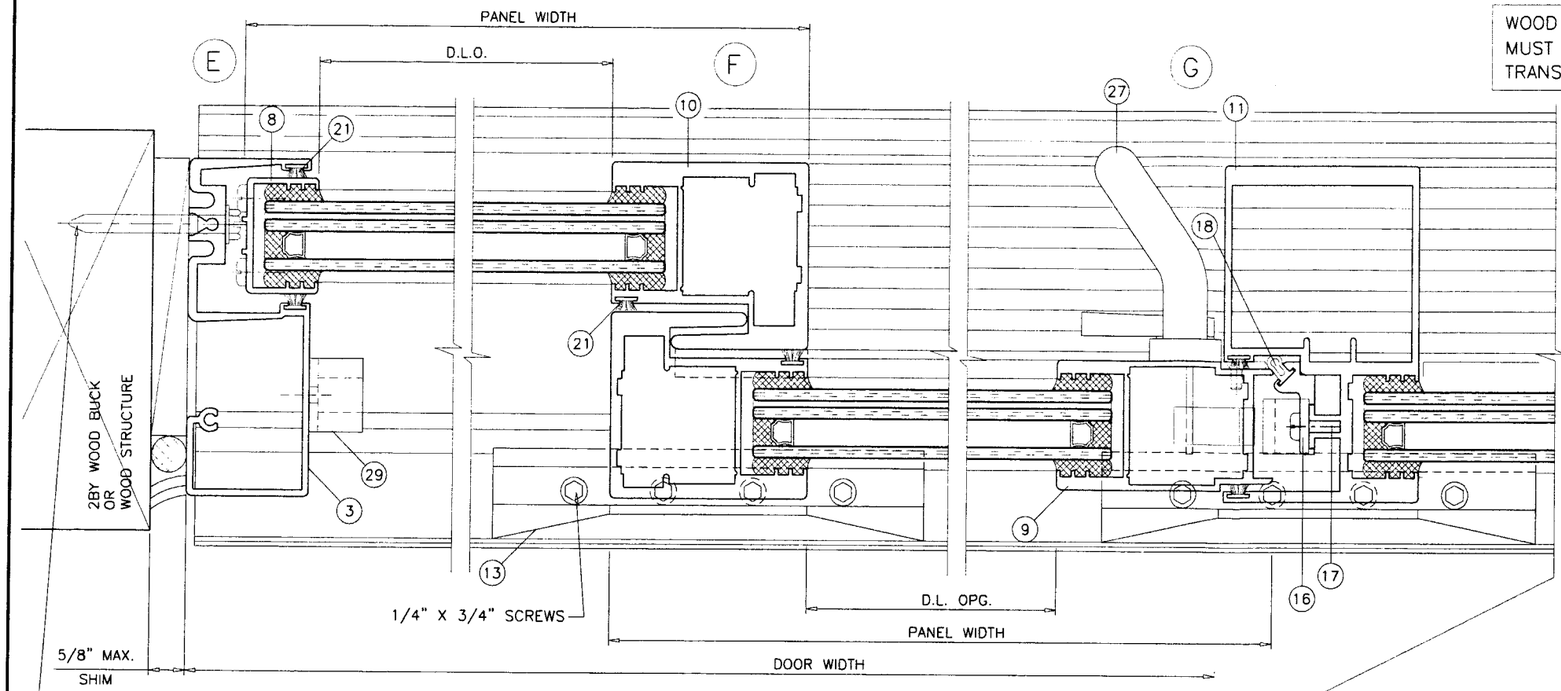

EXTERIOR

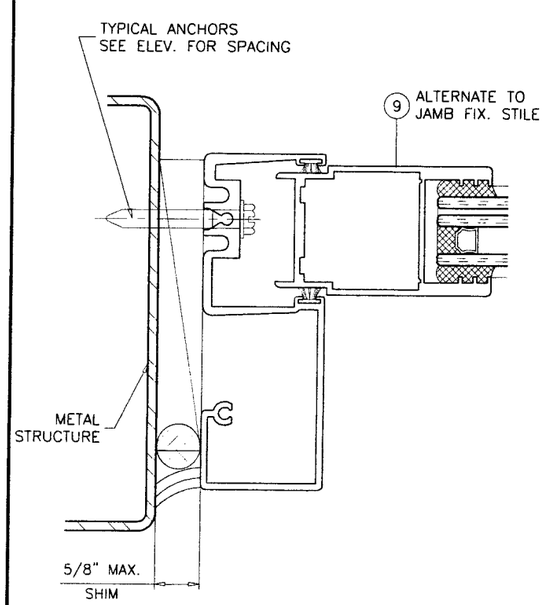

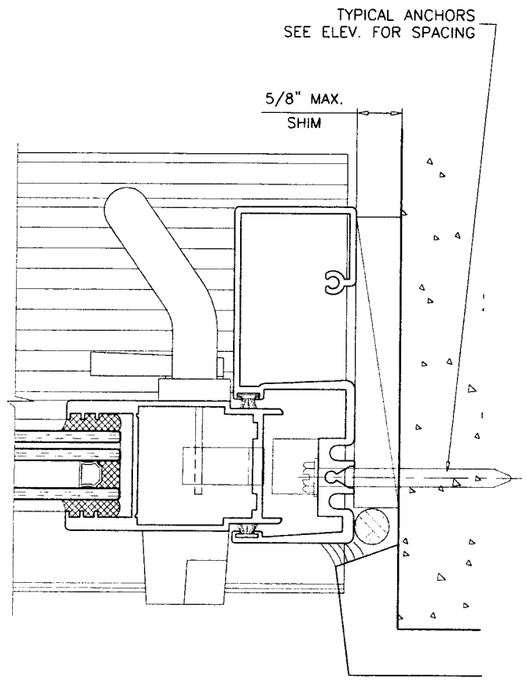

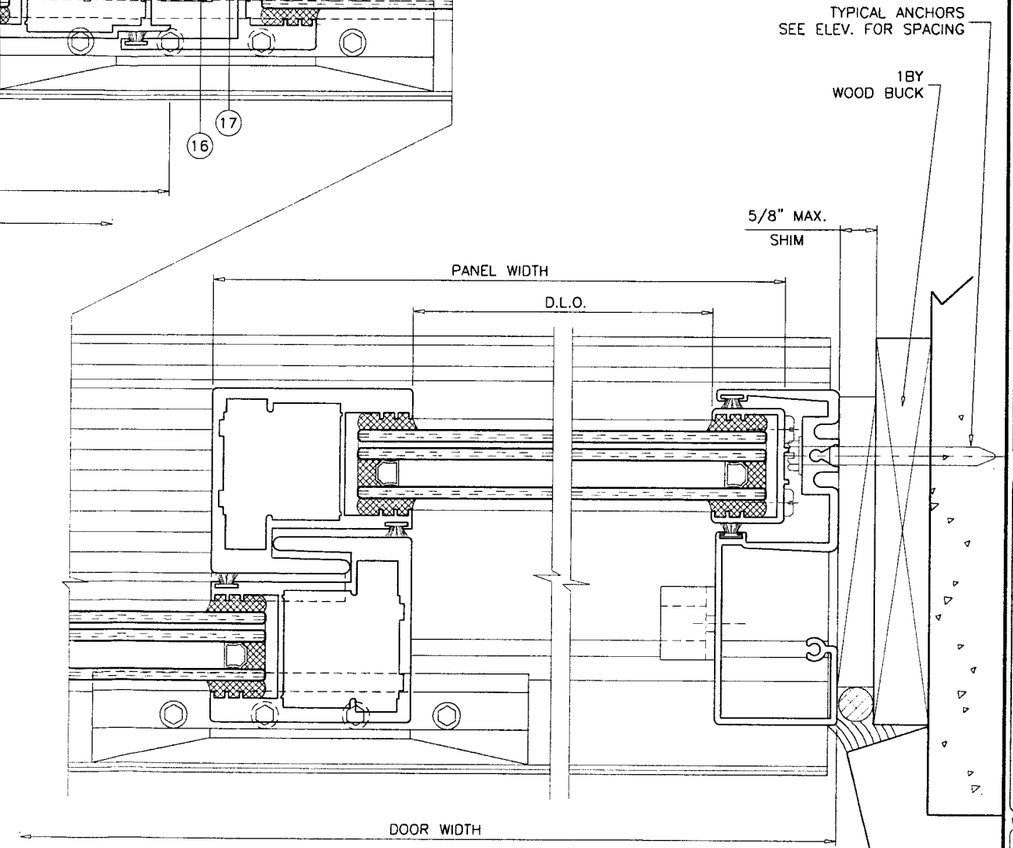

Engr: DR. HUMAYOUN FAROOQ
STRUCTURES
FLA. PE # 16557
C.A.N 3538

MAR 1 0 2009

PRODUCT REVISED
as complying with the Florida Building Code
Acceptance No 09-0324.02
Expiration Date MAY 27, 2014
By Manuel Perez
Miami-Dade Product Control Division

AL-FAROOQ CORPORATION
ENGINEERS & PRODUCT DEVELOPMENT
1235 S.W. 87 AVE
MIAMI, FLORIDA 33174
TEL. (305) 264-8100 FAX. (305) 262-6978

COMP-ANL\W03-101RC

SERIES-RS240 ALUM SLIDING GLASS DOOR (L.M.I.)

R.C. ALUMINUM INDUSTRIES INC.
2805 N.W. 75 TH AVE.
MIAMI, FL. 33122
TEL. (305) 592-1515 FAX. (305) 592-2184

revisions:

no	date	by	description
A	08.05.05		NO CHANGE THIS SHEET
B	11.01.05		NO CHANGE THIS SHEET
C	12.01.05		NO CHANGE THIS SHEET
D	03.04.09		UPDATED FOR 2007 FBC

date: 11-10-03
scale: 1/2" = 1"
dr. by: HAMID
chk. by:

drawing no.
W03-101

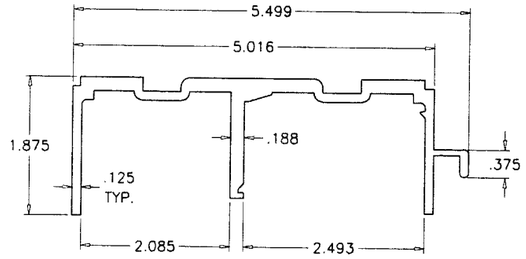

1 FRAME HEAD

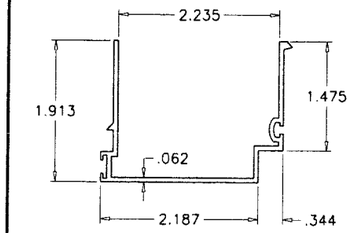

14 HEAD COVER

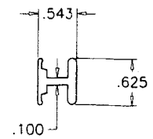

30 INSIDE SILL TRACK

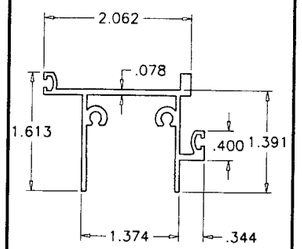

7 FIX. TOP RAIL

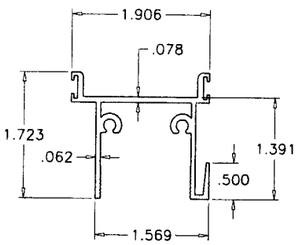

6 MOV. TOP RAIL

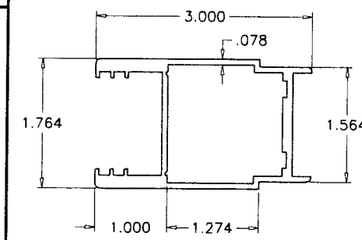

9 LOCK STILE

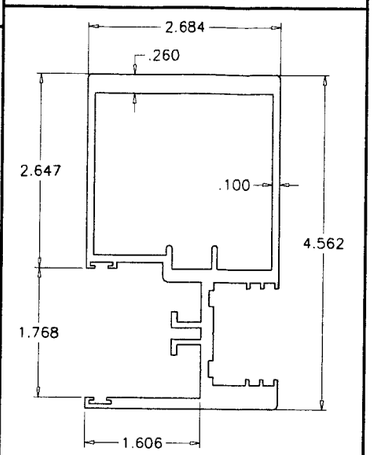

11 MTG. STILE

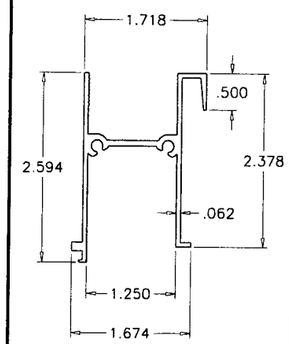

5 FIX. BOTTOM RAIL

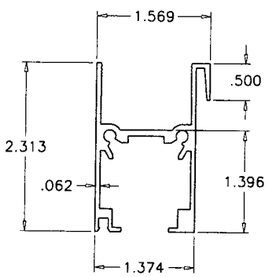

4 MOVING BOTTOM RAIL

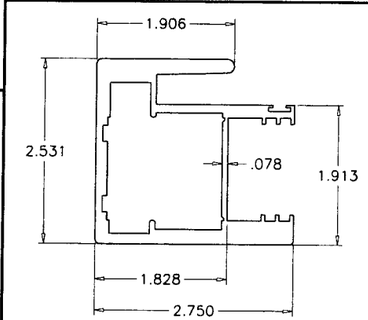

10 INTERLOCK

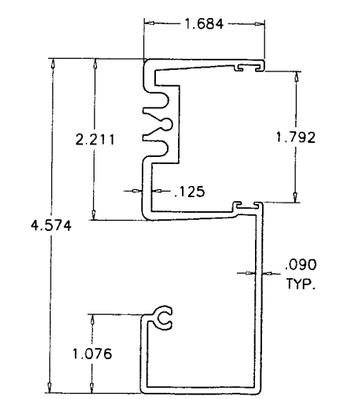

3 FRAME JAMB

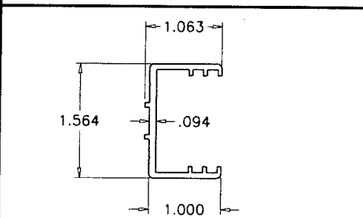

8 FIXED STILE

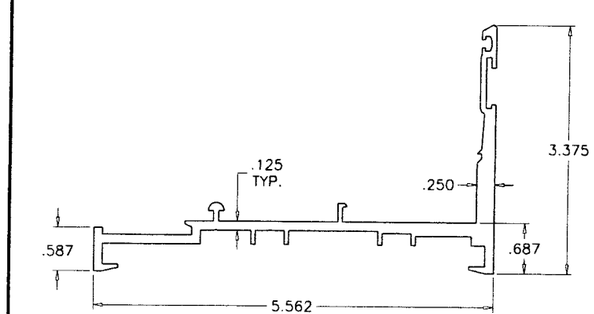

2 FRAME SILL

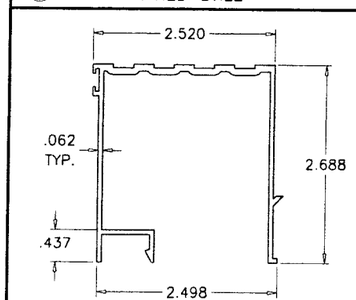

12 THRESHOLD COVER

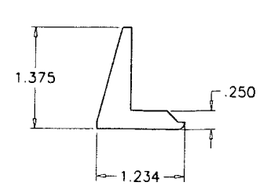

13 SILL ANCHOR

Engr: DR. HUMAYOUN FAROOQ
STRUCTURES
FLA. PE # 16557
C.A.N. 3538

MAR 1 0 2009

PRODUCT REVISED
as complying with the Florid..
Building Code
Acceptance No 09-0324.02
Expiration Date MAY 27, 2014
By Miami-Dade Product Control
Division

AL-FAROOQ CORPORATION
ENGINEERS & PRODUCT DEVELOPMENT
1235 S.W. 87 AVE
MIAMI, FLORIDA 33174
TEL. (305) 264-8100 FAX. (305) 262-6978
COMP-ANL\W03-101RC

SERIES-RS240 ALUM SLIDING GLASS DOOR (L.M.I.)

R.C. ALUMINUM INDUSTRIES INC.
2805 N.W. 75 TH AVE.
MIAMI, FL. 33122
TEL. (305) 592-1515 FAX. (305) 592-2184

revisions:

no	date	by	description
A	08.05.05		NO CHANGE THIS SHEET
B	11.01.05		NO CHANGE THIS SHEET
C	12.01.05		REV. PER BCCO COMMENTS
D	03.04.09		UPDATED FOR 2007 FBC

date: 11-10-03
scale: 1/2" = 1"
dr. by: HAMID
chk. by:

drawing no.
W03-101

sheet 7 of 8

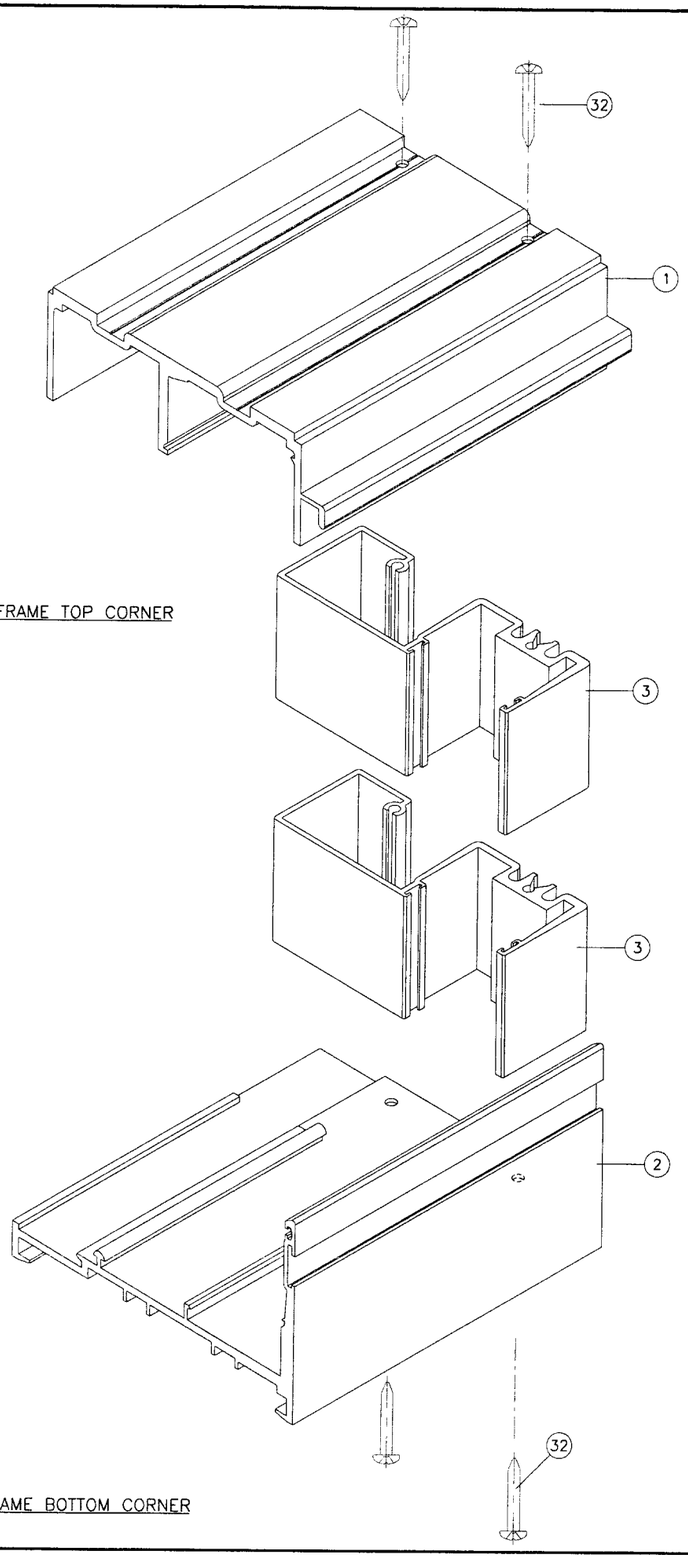

FRAME TOP CORNER

FRAME BOTTOM CORNER

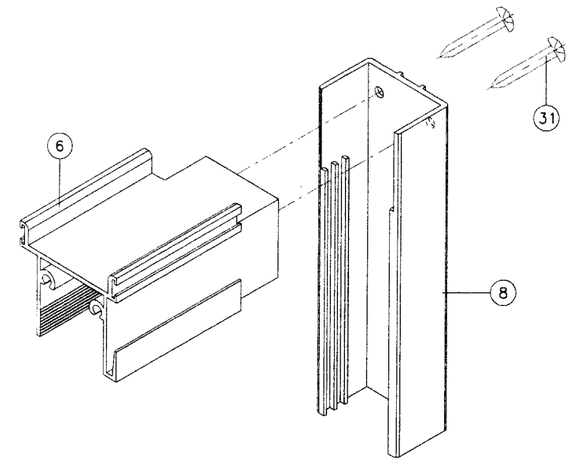

PANEL TOP CORNER

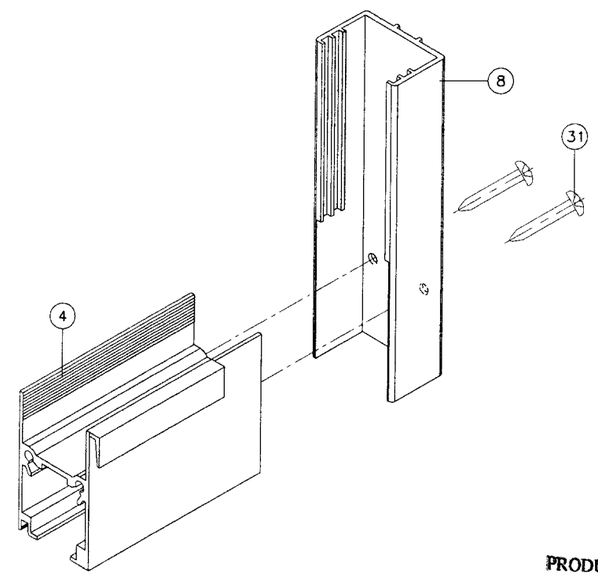

PANEL BOTTOM CORNER

PRODUCT REVISED
as complying with the Florid
Building Code
Acceptance No 09-0324.02
Expiration Date MAY 27 2014
By Manuel Perez
Miami Dade Product Control
Division

Engr: DR. HUMAYOUN FAROOQ
STRUCTURES
FLA. PE # 16557
C.A.N. 3538

MAR 1 0 2009

AL-FAROOQ CORPORATION
ENGINEERS & PRODUCT DEVELOPMENT
1235 S.W. 87 AVE
MIAMI, FLORIDA 33174
TEL. (305) 264-8100 FAX. (305) 262-6978

COMP-ANL\W03-101RC

SERIES-RS240 ALUM SLIDING GLASS DOOR (L.M.I.)

R.C. ALUMINUM INDUSTRIES INC.
2805 N.W. 75 TH AVE.
MIAMI, FL. 33122
TEL. (305) 592-1515 FAX. (305) 592-2184

revisions:

no	date	by	description
A	08.05.05		NO CHANGE THIS SHEET
B	11.01.05		NO CHANGE THIS SHEET
C	12.01.05		REV. PER BCCO COMMENTS
D	03.04.09		UPDATED FOR 2007 FBC

date: 11-10-03
scale: 1/2" = 1"
dr. by: HAMID
chk. by:

drawing no.
W03-101