N.W. 173 DR. from N.W. 68 AVE. to N.W. 72 AVE.

DRAINAGE IMPROVEMENT PROJECT

MIAMI–DADE COUNTY PROJECT NO. 20150120

FUNDING SOURCE: GENERAL OBLIGATION BOND

INDEX OF SHEETS

SHT. No.	SHEET DESCRIPTION
1	COVER SHEET
2	GENERAL NOTES
3	SURVEYOR'S NOTES, KEY SHEET, LEGEND AND ABBREVIATIONS
4–8	DRAINAGE PLAN
9	PROPOSED DRAINAGE STRUCTURE TABLE, CONFLICT TABLE AND SUMMARY OF QUANTITIES
10	STANDARD DETAILS
11	SEDIMENT BARRIERS DETAILS
12	INLET PROTECTION SYSTEMS DETAILS
13	STORMWATER POLLUTION PREVENTION PLAN

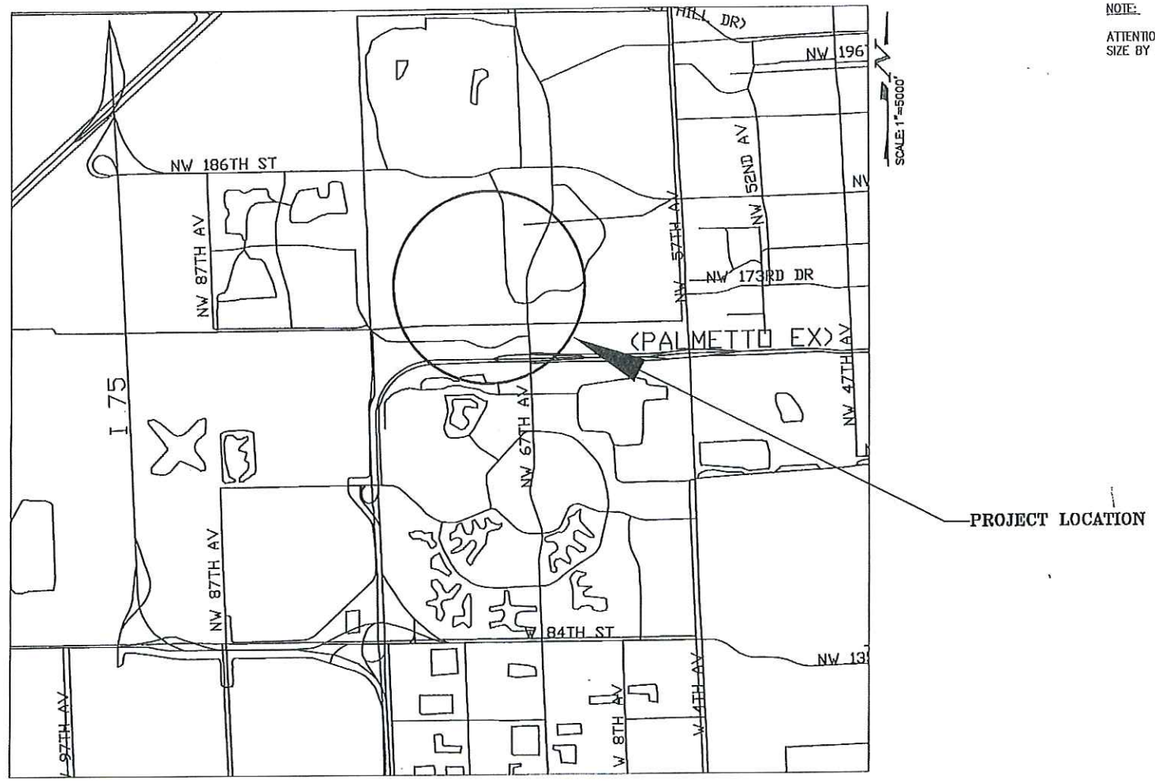

NOTE:

ATTENTION IS DIRECTED TO THE FACT THAT THESE PLANS MAY HAVE BEEN REDUCED IN SIZE BY REPRODUCTION. THIS MUST BE CONSIDERED WHEN OBTAINING SCALED DATA.

THESE PLANS HAVE BEEN PREPARED IN ACCORDANCE WITH AND ARE GOVERNED BY THE MIAMI–DADE COUNTY PUBLIC WORKS DEPARTMENT STANDARDS AND SPECIFICATIONS PARTS 1, 2 AND 3. THE MANUAL OF UNIFORM MINIMUM STANDARDS FOR DESIGN, CONSTRUCTION AND MAINTENANCE FOR STREETS AND HIGHWAYS. THE FLORIDA DEPARTMENT OF TRANSPORTATION ROADWAY AND TRAFFIC DESIGN STANDARDS, AND THE FLORIDA DEPARTMENT OF TRANSPORTATION STANDARD SPECIFICATIONS, AS AMENDED BY CONTRACT DOCUMENTS.

Sunshine State One Call of Florida, Inc. 811

PREPARED BY

MIAMI–DADE COUNTY

MIAMI–DADE COUNTY
DEPARTMENT OF TRANSPORTATION
AND PUBLIC WORKS
ROADWAY ENGINEERING AND
RIGHT OF WAY DIVISION
STORMWATER DRAINAGE DESIGN SECTION

STEPHEN P. CLARK CENTER
111 NW 1 ST, SUITE 1510
MIAMI, FLORIDA 33128

DARYL K. HILDOER LICENSE No. 68633 STATE OF FLORIDA PROFESSIONAL ENGINEER

ENGINEER OF RECORD: 3-18-16

DARYL K. HILDOER, P.E.
FLORIDA REGISTRATION P.E. No. 68633
CIVIL ENGINEER

DESIGN	J.C.	CHECK	F.G.
		DRAWN	I.I.
DATE	11–10–2015	SHEET	1 OF 13

W:\DANIA\dd-Cons\NW173DR_NW68AVE-NW72AVE\NW173DR_NW68AVE-NW72AVE_S01.dwg Feb 25, 2016 - 11:25am IZQUII

GENERAL NOTES:

1. ALL ELEVATIONS REFER TO THE MSL, 1929 NATIONAL GEODETIC VERTICAL DATUM (NGVD).
2. ALL DRAINAGE CONSTRUCTION SHALL BE IN STRICT ACCORDANCE WITH THE REQUIREMENTS OF MIAMI-DADE COUNTY PERMITTING, REGULATORY AND ECONOMIC RESOURCES AND THE MIAMI-DADE COUNTY DEPARTMENT OF TRANSPORTATION AND PUBLIC WORKS.
3. IT IS THE INTENT OF THESE PLANS TO BE IN ACCORDANCE WITH APPLICABLE CODES AND AUTHORITIES HAVING JURISDICTION. ANY DISCREPANCIES BETWEEN THESE PLANS AND APPLICABLE CODES SHALL BE IMMEDIATELY BROUGHT TO THE ATTENTION OF THE ENGINEER.
4. CATCH BASINS, SEEPAGE DRAINS, PAVEMENT RESTORATION AND PAVEMENT AROUND CATCH BASINS TO BE ACCORDING TO THE DETAILS AND APPLICABLE REQUIREMENTS OF THE MIAMI-DADE COUNTY DEPARTMENT OF TRANSPORTATION AND PUBLIC WORKS.
5. WHERE NEW PAVEMENT MEETS EXISTING, CONNECTION SHALL BE MADE IN A NEAT STRAIGHT LINE AND FLUSH WITH EXISTING PAVEMENT.
6. CONTRACTOR IS TO VERIFY THE EXACT LOCATION OF ALL EXISTING TREES, STRUCTURES, AND UTILITIES WHICH MAY NOT BE SHOWN ON PLANS. ANY EXISTING STRUCTURE, PAVEMENT, TREES OR OTHER EXISTING IMPROVEMENT NOT SPECIFIED FOR REMOVAL WHICH IS TEMPORARILY DAMAGED, EXPOSED OR IN ANY WAY DISTURBED BY CONSTRUCTION PERFORMED UNDER THIS CONTRACT, SHALL BE REPAIRED, PATCHED OR REPLACED AT NO ADDITIONAL COST TO THE OWNER.
7. THE LOCATION AND SIZE OF ALL EXISTING UTILITIES SHOWN ON THESE DRAWINGS ARE APPROXIMATE; ADDITIONAL UTILITIES MAY EXIST WHICH ARE NOT SHOWN ON THESE DRAWINGS. THE CONTRACTOR SHALL BE RESPONSIBLE FOR THE LOCATION OF ALL EXISTING UTILITIES. THE CONTRACTOR SHALL VERIFY ALL UTILITIES BY ELECTRONIC METHODS AND BY HAND EXCAVATION IN COORDINATION WITH ALL UTILITY COMPANIES; PRIOR TO BEGINNING ANY CONSTRUCTION OPERATION, ANY AND ALL CONFLICTS OF EXISTING UTILITIES WITH PROPOSED IMPROVEMENTS MUST BE RESOLVED BY THE ENGINEER AND THE OWNER. THIS WORK BY THE CONTRACTOR SHALL BE CONSIDERED INCIDENTAL TO THE CONTRACT AND NO ADDITIONAL COMPENSATION SHALL BE ALLOWED.
8. CONTRACTOR SHALL CONTACT THE SUNSHINE STATE ONE CALL OF FLORIDA, INC. AT 1 (800) 432-4770 AT LEAST 48 HOURS PRIOR TO PERFORMING ANY DIGGING TO VERIFY THE EXACT LOCATION OF EXISTING UTILITIES.
9. EXISTING TREES SHALL BE REMOVED ONLY IF REQUIRED FOR CONSTRUCTION. THOSE TREES NOT INTERFERING WITH CONSTRUCTION SHALL BE PROTECTED IN PLACE. THE CONTRACTOR IS ADVISED THAT A TREE PERMIT MAY BE REQUIRED FOR TREE REMOVAL. CONTRACTOR SHALL NOTIFY REGULATORY AND ECONOMIC RESOURCES DEPARTEMENT AND MUNICIPALITIES WITH JURIDICTION PRIOR TO REMOVING ANY TREES.
10. EXISTING GRADES WERE TAKEN FROM THE BEST AVAILABLE DATA AND MAY NOT ACCURATELY REFLECT PRESENT CONDITIONS. CONTRACTOR SHALL BE RESPONSIBLE FOR FAMILIARIZING HIMSELF WITH CURRENT SITE CONDITIONS, AND SHALL REPORT ANY DISCREPANCIES TO THE ENGINEER PRIOR TO STARTING WORK.
11. THE CONTRACTOR SHALL PREPARE AND SUBMIT SHOP DRAWINGS FOR ALL ITEMS LISTED IN PROJECT SPECIFICATION.
12. UNDER NO CIRCUMSTANCES SHALL THE CONTRACTOR LEAVE EXCAVATED TRENCHES, OR PARTS OF, EXPOSED OR OPEN AT THE END OF THE WORKING DAY, WEEKENDS, HOLIDAYS OR OTHER TIMES. WHEN THE CONTRACTOR IS NOT WORKING, UNLESS OTHERWISE DETERMINED, ANY TRENCH SHALL BE COVERED, FIRMLY SECURED AND MARKED ACCORDINGLY FOR PEDESTRIAN TRAFFIC.
13. THE CONTRACTOR SHALL MAINTAIN ACCESS TO ALL ADJACENT PROPERTIES AT ALL TIMES.
14. ALL EXCAVATED MATERIAL REMOVED FROM THIS PROJECT SHALL BE DISPOSED OF PROPERLY BY THE CONTRACTOR AT THE CONTRACTOR'S EXPENSE.
15. CAST IRON PRODUCTS: HEAVY-DUTY CLASSIFICATION SUITABLE FOR HIGHWAY TRAFFIC LOADS, OR 16,000 LB. WHEEL LOADS.
16. STEEL GRATING AND COVERS: TRAFFIC CLASSIFICATION H-20 AASHTO H20: 16,000 LBS. OVER 8" X 20" AREA.
17. ALL STRUCTURES MUST BE CAPABLE OF SUSTAINING HEAVY TRAFFIC LOADS.
18. ALL GRASS AREAS AFFECTED BY CONSTRUCTION SHALL BE RE-SODDED.
19. THE CONTRACTOR SHALL BE RESPONSIBLE FOR THE PROVISION, INSTALLATION AND MAINTENANCE OF ALL TRAFFIC CONTROL AND SAFETY DEVICES, IN ACCORDANCE WITH SPECIFICATIONS OUTLINED IN SECTION C2 AND SECTION R19 OF THE PUBLIC WORKS DEPARTMENT MANUAL. IN ADDITION, THE CONTRACTOR IS RESPONSIBLE FOR THE RESETTING OF ALL TRAFFIC CONTROL AND INFORMATION SIGNING REMOVED DURING CONSTRUCTION PERIOD.
20. EXCAVATED OR OTHER MATERIAL STORED ADJACENT TO OR PARTIALLY UPON A ROADWAY PAVEMENT SHALL BE ADEQUATELY MARKED FOR TRAFFIC SAFETY AT ALL TIMES.
21. TEMPORARY PATCH MATERIAL MUST BE ON THE JOB SITE WHENEVER PAVEMENT IS CUT, OR THE INSPECTOR WILL SHUT THE JOB DOWN.
22. CONTRACTOR SHALL MAINTAIN TRAFFIC ACCORDING TO CORRESPONDING TYPICAL CONTROL DETAIL AS OUTLINED IN MIAMI-DADE COUNTY PUBLIC WORKS MANUAL.
23. CONTRACTOR SHALL MAINTAIN AT LEAST THE FOLLOWING NUMBER OF TRAFFIC LANES FOR CORRESPONDING TIME PERIODS: MONDAY – FRIDAY 7-9 A.M. AND 4-6 P.M.; NO INTERRUPTION TO TRAFFIC IS PERMITTED.

    ALL OTHER TIMES:

    A) MAINTAIN ONE LANE FOR TWO-WAY OPERATION WITH FLAGMEN.

    B) MAINTAIN ONE LANE IN EACH DIRECTION FOR TRAFFIC.
24. CONTRACTOR MUST PROVIDE FLASHER ARROW BOARD FOR ANY LANE THAT IS CLOSED OR DIVERTED.
25. CONTRACTOR SHALL NOTIFY LAW ENFORCEMENT AND FIRE PROTECTION SERVICES TWENTY-FOUR (24) HOURS IN ADVANCE OF THE DETOUR IN ACCORDANCE WITH SECTION 336.07 OF FLORIDA STATUTES.
26. COMPLETE AS-BUILT INFORMATION RELATIVE TO LOCATION AND DEPTH OF PIPES, MANHOLES, ETC. SHALL BE ACCURATELY RECORDED BY THE CONTRACTOR. THREE (3) SETS LABELED "AS-BUILT" MUST BE SUBMITTED, SIGNED AND SEALED BY A PROFESSIONAL ENGINEER REGISTERED IN THE STATE OF FLORIDA, TO THE ENGINEER OF RECORD PRIOR TO FINAL ACCEPTANCE OF THE WORK.
27. IT IS RESPONSIBILITY OF THE CONTRACTOR TO SELECT AND OBTAIN THE APPROPRIATE PERMISSION FROM MIAMI-DADE COUNTY OR APPLICABLE AGENCY THAT HAS JURISDICTION ON THE "PROPOSED" STAGING AREAS.
28. DRAINAGE/UTILITY TRENCHES SHALL NOT BE LEFT OPEN OVERNIGHT. A TEMPORARY COVER WITH A CAPACITY OF H-20 LOADING SHALL BE PLACED AS DIRECTED BY THE ENGINEER AT NO EXTRA COST TO MIAMI-DADE COUNTY.
29. PROVIDE FLOWABLE FILL OVER PIPE AS COVER WHERE MINIMUM PIPE COVER OF 2 FEET CANNOT BE ACCOMPLISHED UNDER PAVED AREAS. HOWEVER, THE COVER WITH FLOWABLE FILL SHALL BE NO LESS THAN 12 INCHES.
30. ALL STATIONS AND OFFSETS REFER TO [CENTERLINE]/ [BASELINE] OF CONSTRUCTION, UNLESS OTHERWISE STATED.
31. CONTRACTOR SHALL COMPLY WITH THE REQUIREMENTS OF THE EPA AND THE NATIONAL POLLUTION DISCHARGE ELIMINATION SYSTEM (NPDES).
32. MIAMI-DADE WATER AND SEWER DEPARTMENT REQUIRES THAT ACCESS TO ALL WATER AND SEWER VALVES, SANITARY MANHOLES, AND OTHER CONTROL MECHANISMS BE MAINTAINED THROUGHOUT CONSTRUCTION IN THE EVENT OF AN EMERGENCY TO ENSURE THE PUBLIC HEALTH AND SAFETY. COVERING VALVE BOXES AND MANHOLES CAN BE CONSIDERED UNAUTHORIZED CONSTRUCTION OF AND TAMPERING WITH DEPARTMENT UTILITIES. ALL REQUESTS FOR UTILITY ADJUSTMENTS MUST BE MADE IN WRITING AT LEAST TWO (2) WEEKS IN ADVANCE. FOR MANHOLE AND VALVES, CONTACT UTILITY COORDINATOR PATRICK CHONG AT 786-268-5255. THE DEPARTMENT WILL MAKE ONE FINAL AND PERMANENT ADJUSTMENT AT NO COST TO THE REQUESTING AGENCY. FOR THE ADJUSTMENT OF WATER METERS, CONTACT THE CHIEF OF METER OPERATIONS AND MAINTENANCE: 786-268-5469. FOR ANY FIRE HYDRANTS THAT ARE DAMAGED OR BUMPED DURING CONSTRUCTION, CONTACT THE MDWASD HYDRANT SHOP AT 305-552-4926, BEFORE POURING CONCRETE FOR THE SIDEWALK. IN THE EVENT OF A WATER OR SEWER EMERGENCY, WASD EMERGENCY NUMBER 305-552-8901. THIS LINE IS OPEN 24 HOURS, 7 DAYS A WEEK.
33. THE CONTRACTOR IS ADVISED THAT PROPERTIES ADJACENT TO THE PROJECT HAVE ELECTRIC, TELEPHONE, GAS, WATER AND/OR SEWER SERVICE LATERALS WHICH MAY NOT BE SHOWN IN PLANS. THE CONTRACTOR MUST REQUEST THE LOCATION OF THESE LATERAL SERVICES FROM THE UTILITY COMPANIES. THE ADDITIONAL COST OF EXCAVATING, INSTALLING, BACKFILLING, AND COMPACTING AROUND THESE SERVICES MUST BE INCLUDED IN THE BID RELATED ITEM FOR THE WORK BEING DONE.
34. THE CONTRACTOR SHOULD TAKE SPECIAL NOTE OF SOIL CONDITIONS THROUGHOUT THIS PROJECT. ANY SPECIAL SHORING, SHEETING OR OTHER PROCEDURES NECESSARY TO PROTECT ADJACENT PROPERTY, PUBLIC OR PRIVATE, DURING THE EXCAVATION OF SUBSOIL MATERIAL AND EXFILTRATION TRENCH, OR FILLING OF ANY AREA, OR FOR ANY OPERATION DURING CONSTRUCTION, SHALL BE THE SOLE RESPONSIBILITY OF THE CONTRACTOR.
35. IF SHEETING, SHORING OR DEWATERING, INCLUDING WELL POINTS ARE NECESSARY, THE CONTRACTOR MUST MONITOR AND CONTROL ALL WORK THAT MAY CAUSE CRACKING TO ANY ADJACENT BUILDING, STRUCTURE, OR PROPERTY AREA. THE CONTRACTOR SHALL BE RESPONSIBLE FOR ANY DAMAGES CAUSED BY THESE OPERATIONS. COST OF SHEETING, SHORING, OR DEWATERING, SHALL BE INCLUDED IN THE RELATED BID ITEM FOR THE WORK BEING DONE.
36. ALL DITCH EXCAVATIONS SHALL BE PERFORMED IN FULL COMPLIANCE WITH THE PROVISIONS OF THE TRENCH SAFETY ACT.
37. ANY KNOWN OR SUSPECTED HAZARDOUS MATERIAL FOUND ON THE PROJECT BY THE CONTRACTOR SHALL BE IMMEDIATELY REPORTED TO THE PROJECT ENGINEER, WHO SHALL DIRECT THE CONTRACTOR TO PROTECT THE AREA OF KNOWN OR SUSPECTED CONTAMINATION FROM FURTHER ACCESS. THE ENGINEER WILL ARRANGE FOR INVESTIGATION, IDENTIFICATION, AND REMEDIATION OF THE HAZARDOUS MATERIAL. THE CONTRACTOR SHALL NOT RETURN TO THE AREA OF CONTAMINATION UNTIL APPROVAL IS PROVIDED BY THE PROJECT ENGINEER.
38. THE CONTRACTOR SHALL USE A STREET SWEEPER (USING WATER) OR OTHER EQUIPMENT CAPABLE OF CONTROLLING AND REMOVING DUST. APPROVAL OF THE USE OF SUCH EQUIPMENT IS CONTINGENT UPON ITS DEMONSTRATED ABILITY TO DO THE WORK.
39. WHEN DISSIMILAR MATERIAL CONNECTIONS ARE MADE, SUCH AS CONCRETE TO METAL, THE DISSIMILAR MATERIAL SHALL BE SEPARATED BY COATING THE CONTACT SURFACE WITH BITUMASTIC MATERIAL.
40. PRIOR TO CONSTRUCTION THE CONTRACTOR WILL INSPECT ALL EXISTING STRUCTURES WHICH ARE TO REMAIN AND NOTIFY THE ENGINEER OF ANY OBVIOUS STRUCTURAL DEFICIENCIES.
41. WHERE CONNECTIONS TO EXISTING SIDEWALKS AND DRIVEWAYS ARE NOT INDICATED ON PLANS, PROPER CONNECTIONS ARE TO BE MADE AS DIRECTED BY THE ENGINEER. DROP CURB AND DRIVEWAY CONNECTIONS SHALL BE PROVIDED FOR ACCESS TO ALL PRIVATE PROPERTIES ADJACENT TO THE PROJECT. PAYMENT SHALL BE INCLUDED IN THE COST OF RELATED BID ITEMS.
42. CONTRACTOR TO INSTALL ½" PERFORMED EXPANSION JOINT WHEN PROPOSED SIDEWALK IMPROVEMENTS IS IMMEDIATELY ADJACENT TO EXISTING CONCRETE SLAB AND/OR BUILDING.
43. THE SIDEWALK AT DRIVEWAY TURNOUTS SHALL BE 6"CONCRETE.
44. ALL BUS STOP SIGNS TO BE FURNISHED BY MIAMI-DADE TRANSIT. ENGINEER TO CONTACT MIAMI-DADE COUNTY TRANSIT AT (305) 637-3753 ONE (1) WEEK PRIOR TO POURING SIDEWALKS AND COORDINATE THE REMOVAL AND REPLACEMENT OF BUS STOP SIGNS AND BENCHES.
45. THE INFORMATION PROVIDED IN THESE DRAWINGS IS SOLELY TO ASSIST THE CONTRACTOR IN ASSESSING THE NATURE AND EXTENT OF CONDITIONS WHICH WILL BE ENCOUNTERED DURING THE COURSE OF WORK. THE CONTRACTORS ARE DIRECTED, PRIOR TO BIDDING, TO CONDUCT WHATEVER INVESTIGATIONS THEY DEEM NECESSARY TO ARRIVE AT THEIR OWN CONCLUSION REGARDING THE ACTUAL CONDITIONS THAT WILL BE ENCOUNTERED AND UPON WHICH BIDS WILL BE BASED.
46. ANY SURVEY MONUMENT, BENCH MARK, ETC., FOUND DURING CONSTRUCTION ACTIVITIES ARE TO BE RESTORED TO IT IS ORIGINAL LOCATION AND COORDINATES AS DEPICTED IN COUNTY RECORDS PLAT AND BOOK. RESTORATION WILL BE AT NO ADDITIONAL COST AND MUST BE SHOWN ON AS-BUILT PLANS.

ENGINEER OF RECORD:
3-18-16
DARYL K. HILDOER, P.E.
FLORIDA REGISTRATION P.E. NO. 68633
CIVIL ENGINEER

DARYL K. HILDOER
LICENSE
No. 68633
STATE OF FLORIDA
PROFESSIONAL ENGINEER

REVISIONS								
DATE	BY	DESCRIPTION	DATE	BY	DESCRIPTION	DATE	BY	DESCRIPTION

N.W. 173 DR. from N.W. 68 AVE. to N.W. 72 AVE.
DRAINAGE IMPROVEMENT PROJECT

	NAME	DATE		NAME	DATE
DESIGNED BY	J.C.		DRAWN BY	I.I.	11-10-2015
CHECKED BY	F.C.		CHECKED BY		
SUPERVISED BY:					

MIAMI-DADE COUNTY
DEPARTMENT OF TRANSPORTATION AND PUBLIC WORKS
ROADWAY ENGINEERING AND RIGHT OF WAY DIVISION

GENERAL NOTES

W:\IDANIA\Ida-Cano\NW173DR_NW68AVE-NW72AVE\NW173DR_NW68AVE-NW72AVE_S02.dwg Feb 25, 2016 – 1:58pm IZQUII

SURVEYORS NOTES:

- Survey performed by DTPW Survey Section.
- Survey as per F.B. 2916, PAGES 27 THRU 37
- Bearings shown are as per plat books: 161-7; 156-13; 145-57; 146-68
- Locator: Name: M-6, BM-Elev.=7.55'
  NW 75 PL=110' S.E. of C/L; NW 169 ST=42' NEOF C/L.
  P.K.NAIL & BRASS WASHER, Set on Conc. Pad of TRAFFIC CONTROL BOX
- The elevations shown are referenced to the NationalGeodetic Vertical Datum of 1929 (NGVD 1929)
- Benchmark for vertical control information was obtained from Public Works Survey Section
- All corner lot Radii are 25' unless otherwise noted
- Right-of-Way Lines shown hereon as per existing plats

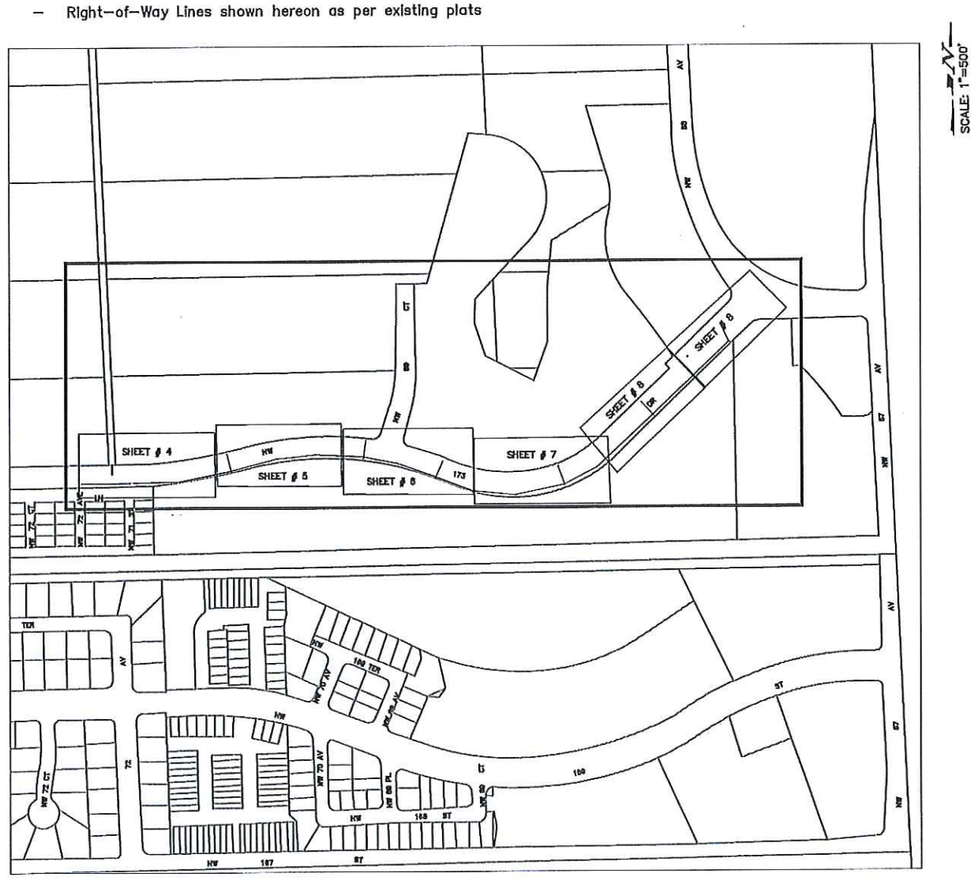

KEY SHEET
TRS 52-40-11

LEGEND AND ABBREVIATIONS:

(M) = Measures
(P) = By Plat
F; Fd = Found
CND = Concrete Nail & Disk
PKF = PK Nail found
CNDF = Concrete Nail & Disk found
CNF = Concrete Nail & Disk found
CNC = Concrete Nail Cut
DHF = Drill Hole Found
NF = Nail found
PKDF = PK Nail & Disk Found
R/W = Right-of-way
RBAC = Rock base asphalt compound
℄ = Base Line
℄ = Center Line
R = Radius
L = Length of Curve
C&G = Curb and Gutter
E/P = Edge of Pavement
T/B = Top of Bank
E/W = Edge of Water
E/W = Edge of Water
PCP = Permanent Control Point
RLS = Registered Land Surveyor
PLS = Professional Land Surveyor
= Street Sign
= Alum. Flashing School Light
= Mailbox
= Decorative Light Pole
= Metal light pole
= Metal Traffic light pole
= Metal Power Pole
= Concrete Light Pole
= Concrete Power Pole
= Wood Light Pole
= Wood Power Pole
= Wood Telephone Pole
= Fiberglass Light Pole
= Water Manhole
= Sanitary Manhole
= Cable Television Pedestal
= TV cable Riser Box
= TV Control Box
= Cable Box
= Telephone Handhole
= Telephone Manhole
= Telephone Utility Box
= Telephone Riser Box
= Telephone Riser Control Box
= Telephone Control Box
= Box
= Crossing Sign
= Post
= Gas valve
= PVC Post
= Wire guy
= Sprinkle Head
= Central angle of curve
= Monitoring Well
= Petroleum Pipeline
= Electric Handhole
= Electric Manhole
= Firehydrant
= Water Valve
= Water Meter
= Traffic Sign Manhole
= Traffic Sign Handhole
= Traffic Control Box
= Traffic Signal Box
= Storm Water Manhole
= Electrical Control Box
= Rail Road Crossing (Light)
= Concrete
= Sanitary Sewer Valve
= Asphalt
= Unimproved Driveway
= Gravel
= Brick
= Stamped Concrete
= Concrete Block Fence
= Tree Diameter

= Existing catch basin
= Proposed catch basin
= Proposed manholes
= Existing solid pipe
= Existing exfiltration trench
= Proposed solid pipe
= Proposed exfiltration trench
= Wood Fence
= Chain link fence
= Iron fence
= Right-of-way Line
= F.P.L. overhead
= F.P.L. underground
= Water Line
= Gas Main
= Force Main
= Cable TV
= Bell South Telephone Conduit
= Baseline
= Sanitary Sewer

AVOCADO TREE
ARECA TREE
AUST. PINE TREE
ALMOND TREE
BLACK OLIVE TREE
BOTTLE BRUSH TREE
BISMARK PALM
BUSH TREE
BISCHOFIA TREE
BANANA TREE
BANYAN TREE
BRASILIAN PEPPER
CABBAGE TREE
COCONUT TREE
CLUSTER PALM
CYPRESS TREE
CANARY PALM
COCOS PLUMOSA
CACTUS
DATE PALM
FICUS TREE
FLORIDA ORCHID TREE
FOX TAIL TREE
GUMBO LIMBO TREE
HIBISCUS TREE
IXORA TREE
JUNIPER TREE
JACARANDA TREE
KAPOC TREE
LIVE OAK TREE
MAMEY TREE
MULBERRY TREE
MAHOGANY TREE
MANGO TREE
MANGROVE TREE
NISPERO TREE
NORFOLK TREE
OAK TREE
ORANGE GEIGER
PINE TREE
PALM TREE
QUEEN PALM TREE
RHOBOLINI TREE
ROYAL POINCIANA TREE
ROSEWOOD TREE
ROYAL PALM
PHILODENDRON/RUBBER TREE
SOUR ORANGE TREE
SEA GRAPE TREE
SOLITARY PALM
SILVER BUTTONWOOD TREE
TABEBULA TREE
TRAVELER CLUSTER
TAMARIND TREE
UNKNOWN TREE
UMBRELLA TREE
ZAPODILLA TREE
WASHINGTON PALM

ENGINEER OF RECORD:
2-18-16
STARVE HOLDEER, P.E.
FLORIDA REGISTRATION P.E. No. 68633
CIVIL ENGINEER

DARYL K. HOLDEER
LICENSE No. 68633
STATE OF FLORIDA
PROFESSIONAL ENGINEER

REVISIONS								
DATE	BY	DESCRIPTION	DATE	BY	DESCRIPTION	DATE	BY	DESCRIPTION

N.W. 173 DR. FROM N.W. 68 AVE. TO N.W. 72 AVE.
DRAINAGE IMPROVEMENT PROJECT

	NAME	DATE		NAME	DATE
DESIGNED BY	J.C.		DRAWN BY	U.	11-02-2015
CHECKED BY	F.G.		CHECKED BY		
SUPERVISED BY:					

MIAMI-DADE COUNTY
DEPARTMENT OF TRANSPORTATION AND PUBLIC WORKS
ROADWAY ENGINEERING AND RIGHT OF WAY DIVISION
STEPHEN P. CLARK CENTER
111 N.W. 1 ST
MIAMI, FLORIDA 33128

SURVEYOR'S NOTES, KEY SHEET
LEGEND, AND ABBREVIATIONS

W:\DRAWA\Ada-Cano\NW173DR_NW68AVE-NW72AVE\NW173DR_NW68AVE-NW72AVE_S03.dwg Mar 17, 2016 - 3:09pm IZQUI

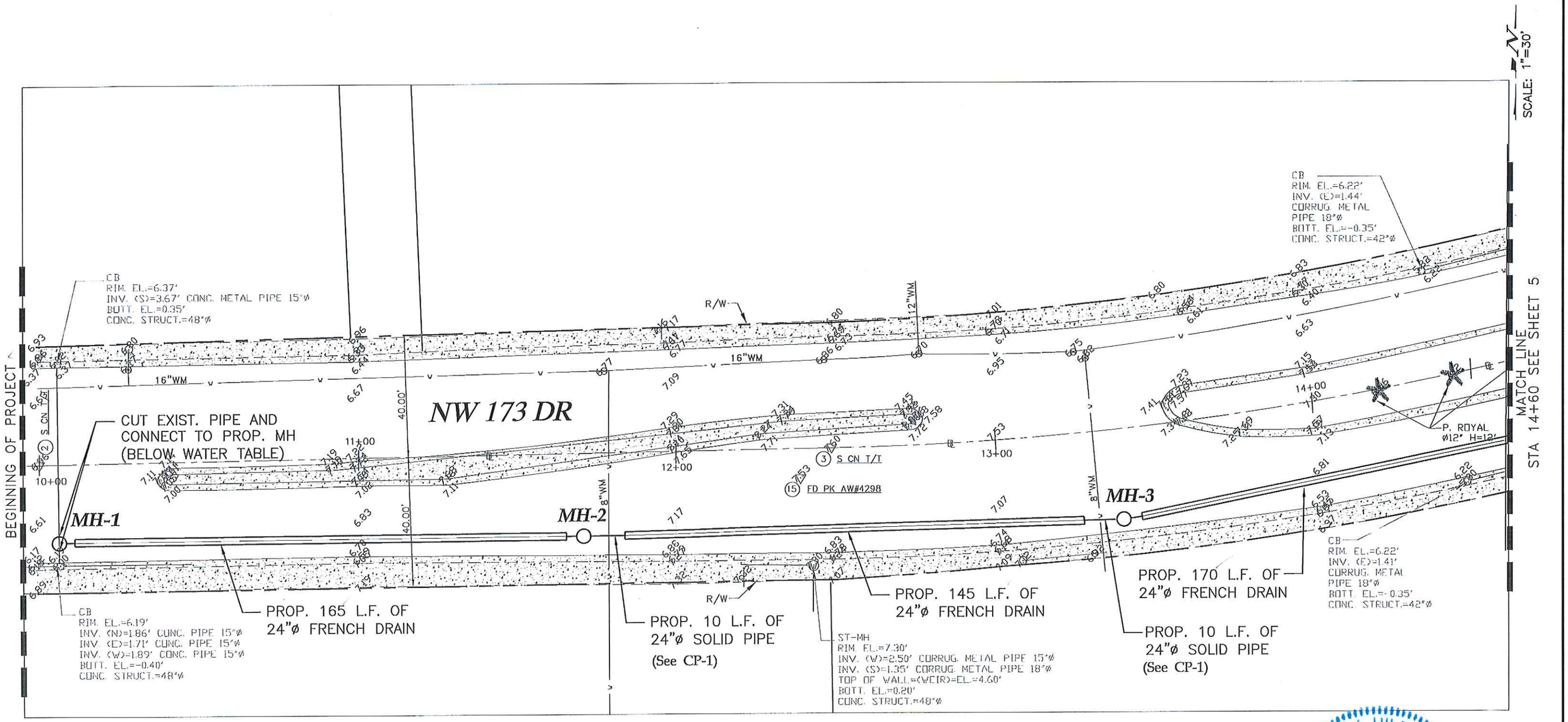

ENGINEER OF RECORD:

DARYL K. HILDOER, P.E.
FLORIDA REGISTRATION No. 68633
CIVIL ENGINEER

DARYL K. HILDOER LICENSE No. 68633 STATE OF FLORIDA PROFESSIONAL ENGINEER

10-18-16

REVISIONS								
DATE	BY	DESCRIPTION	DATE	BY	DESCRIPTION	DATE	BY	DESCRIPTION

N.W. 173 DR. FROM
N.W. 68 AVE. TO N.W. 72 AVE.

	NAME	DATE		NAME	DATE
DESIGNED BY	J.C.		DRAWN BY	K.L.	10-15-2014
CHECKED BY	F.C.		CHECKED BY		
SUPERVISED BY:					

MIAMI-DADE COUNTY

DEPARTMENT OF TRANSPORTATION AND PUBLIC WORKS
ROADWAY ENGINEERING AND RIGHT OF WAY DIVISION
5680-09 N.W. 84 AVE. CENTER
111 N.W. 1 ST
MIAMI, FLORIDA 33128

DRAINAGE PLAN

SCALE: 1"=30'

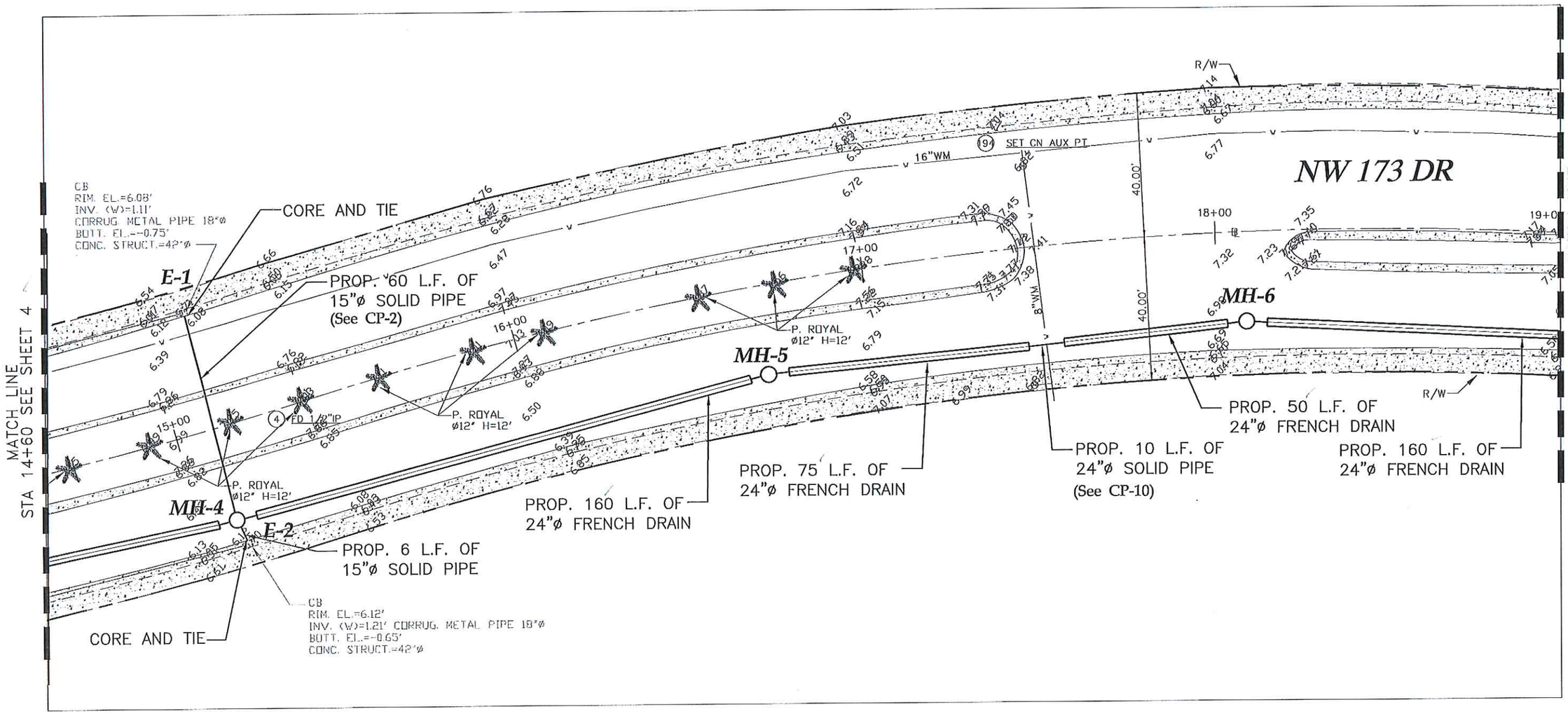

ENGINEER OF RECORD:
DARYL K. HILDOER
LICENSE No. 68633
STATE OF FLORIDA
PROFESSIONAL ENGINEER
10-19-16
DARYL K. HILDOER, P.E.
FLORIDA REGISTRATION P.E. No. 68633
CIVIL ENGINEER

REVISIONS								
DATE	BY	DESCRIPTION	DATE	BY	DESCRIPTION	DATE	BY	DESCRIPTION

N.W. 173 DR. FROM
N.W. 68 AVE. TO N.W. 72 AVE.

	NAME	DATE		NAME	DATE
DESIGNED BY	J.C.		DRAWN BY	J.L.	10-15-2014
CHECKED BY	F.G.		CHECKED BY		
SUPERVISED BY					

MIAMI-DADE COUNTY
DEPARTMENT OF TRANSPORTATION AND PUBLIC WORKS
ROADWAY ENGINEERING AND RIGHT OF WAY DIVISION
111 NW 1 ST
MIAMI, FLORIDA 33128

DRAINAGE PLAN

N.W. 173 DR. FROM N.W. 68 AVE. TO N.W. 72 AVE.
DRAINAGE IMPROVEMENT PROJECT
PROJECT NO. 20150120 SHEET 6 OF 13

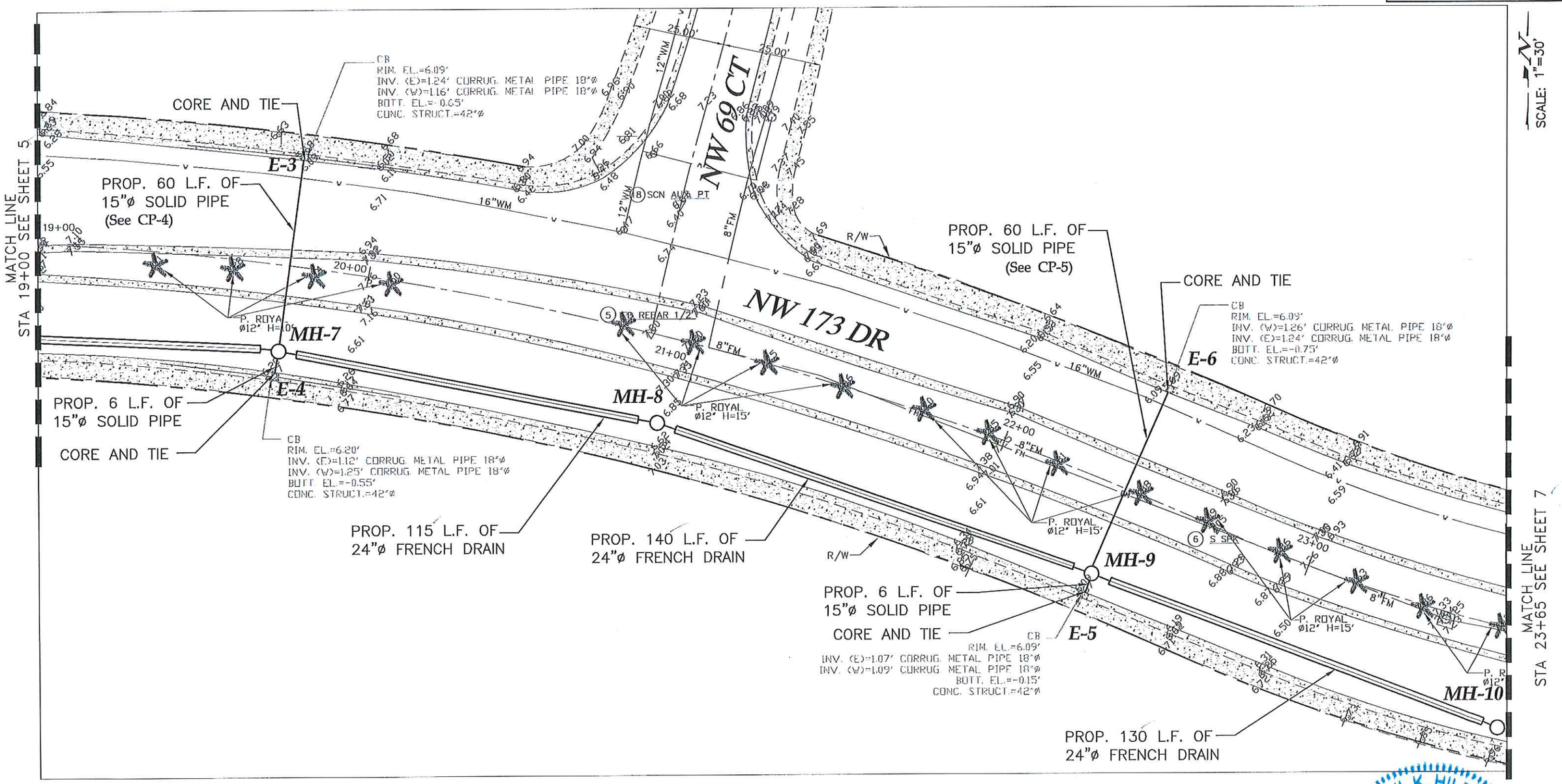

ENGINEER OF RECORD:

DARYL K. HILDOER, P.E.
FLORIDA REGISTRATION P.E. No. 68633
CIVIL ENGINEER

DARYL K. HILDOER LICENSE No. 68633 STATE OF FLORIDA PROFESSIONAL ENGINEER

5-18-16

REVISIONS								
DATE	BY	DESCRIPTION	DATE	BY	DESCRIPTION	DATE	BY	DESCRIPTION

N.W. 173 DR. FROM
N.W. 68 AVE. TO N.W. 72 AVE.

	NAME	DATE		NAME	DATE
DESIGNED BY	J.C.		DRAWN BY	LI.	10-15-2014
CHECKED BY	F.G.		CHECKED BY		
SUPERVISED BY:					

MIAMI-DADE COUNTY

DEPARTMENT OF TRANSPORTATION AND PUBLIC WORKS
ROADWAY ENGINEERING AND RIGHT OF WAY DIVISION
STEPHEN P. CLARK CENTER
111 N.W. 1 ST
MIAMI, FLORIDA 33128

DRAINAGE PLAN

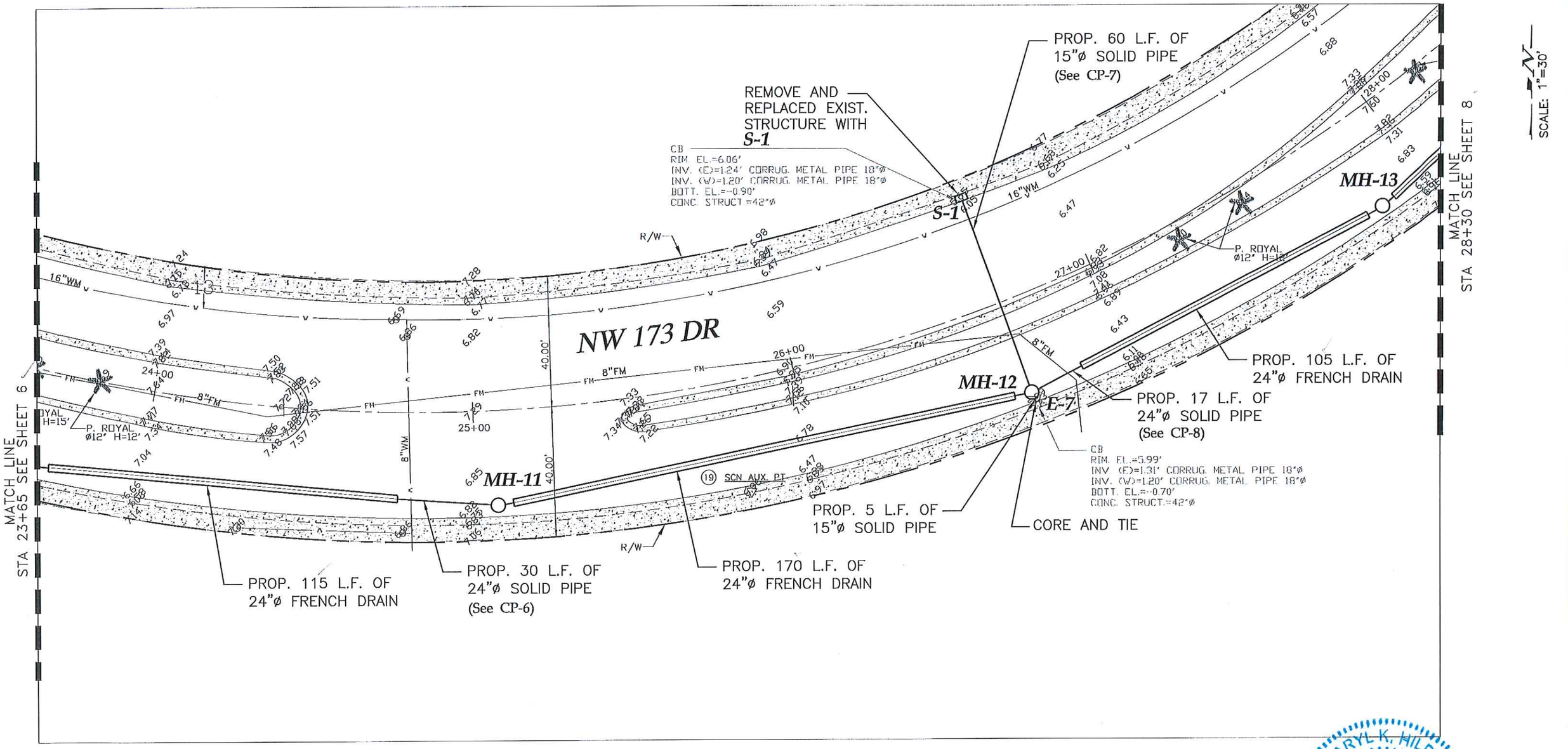

ENGINEER OF RECORD:

DARYL K. HILDOET, P.E.
FLORIDA REGISTRATION P.E. No. 68633
CIVIL ENGINEER

REVISIONS								
DATE	BY	DESCRIPTION	DATE	BY	DESCRIPTION	DATE	BY	DESCRIPTION

N.W. 173 DR. FROM
N.W. 68 AVE. TO N.W. 72 AVE.

	NAME	DATE		NAME	DATE
DESIGNED BY	J.C.		DRAWN BY	I.L.	10-15-2014
CHECKED BY	F.G.		CHECKED BY		
SUPERVISED BY:					

MIAMI-DADE COUNTY

DEPARTMENT OF TRANSPORTATION AND PUBLIC WORKS
ROADWAY ENGINEERING AND RIGHT OF WAY DIVISION
STEPHEN P. CLARK CENTER
111 N.W. 1 ST
MIAMI, FLORIDA 33128

DRAINAGE PLAN

N.W. 173 DR. FROM N.W. 68 AVE. TO N.W. 72 AVE.
DRAINAGE IMPROVEMENT PROJECT
PROJECT NO. 20150120 SHEET 8 OF 13

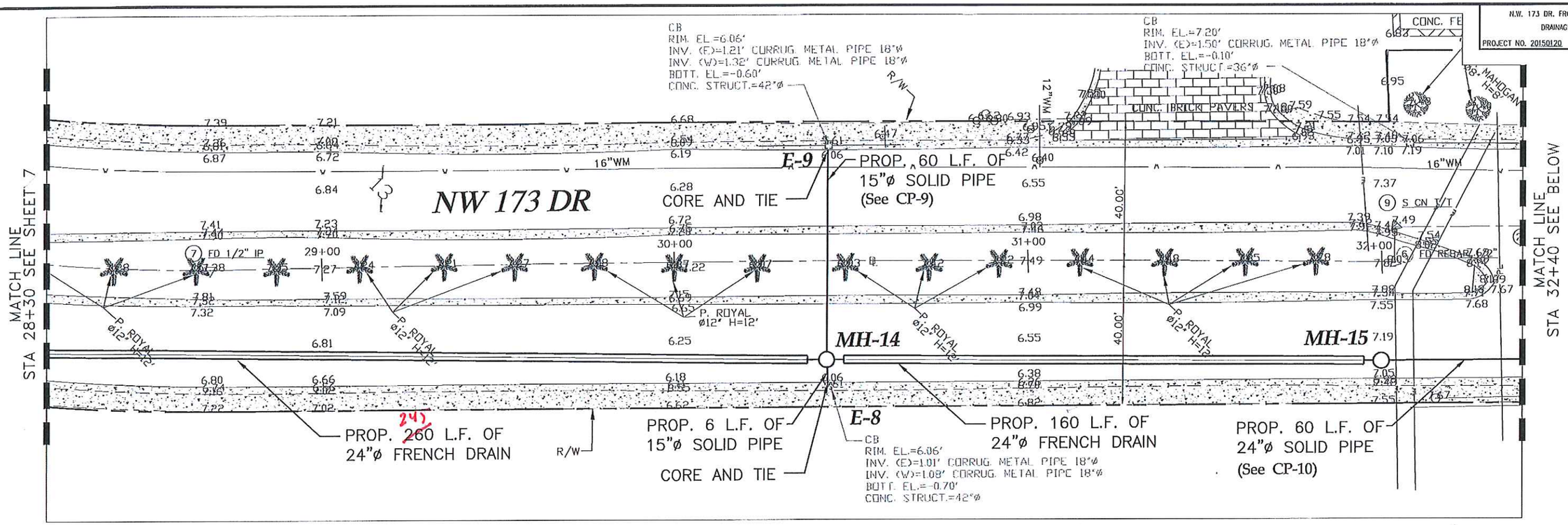

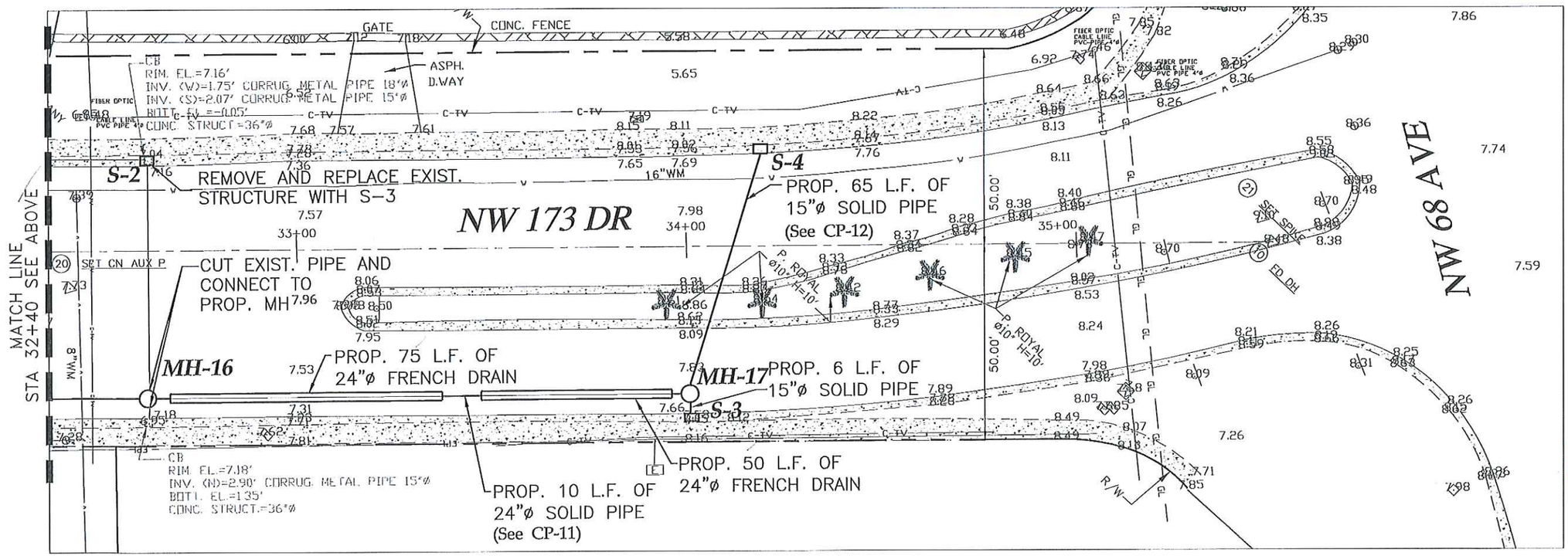

ENGINEER OF RECORD:
DARYL K. HILDOER, P.E.
FLORIDA REGISTRATION NO. 68633
CIVIL ENGINEER

DARYL K. HILDOER
LICENSED
No. 68633
STATE OF FLORIDA
PROFESSIONAL ENGINEER

REVISIONS								
DATE	BY	DESCRIPTION	DATE	BY	DESCRIPTION	DATE	BY	DESCRIPTION

N.W. 173 DR. FROM N.W. 68 AVE. TO N.W. 72 AVE.

	NAME	DATE		NAME	DATE
DESIGNED BY	J.C.		DRAWN BY	I.I.	10-15-2014
CHECKED BY	F.G.		CHECKED BY		
SUPERVISED BY:					

MIAMI-DADE COUNTY

DEPARTMENT OF TRANSPORTATION AND PUBLIC WORKS
ROADWAY ENGINEERING AND RIGHT OF WAY DIVISION
STEPHEN P. CLARK CENTER
111 NW 1 ST
MIAMI, FLORIDA 33128

DRAINAGE PLAN

PROPOSED DRAINAGE STRUCTURE SCHEDULE

Structure	Station	Type	Inside Dimension	Rim Elevation	Bottom Elevation	Pipe Invert Elevation N	Pipe Invert Elevation S	Pipe Invert Elevation E	Pipe Invert Elevation W	Remarks
MH-1	10+06 (25' RT)	P-7T	42" x 42"	6.40	(-) 0.10	Exist. 1.90	Exist. 1.90	1.90		Connect to exist. Pipe
MH-2	11+70 (25.0' RT)	P-7T	42"φ	6.90	(-) 1.45			0.55	1.90	
MH-3	13+37 (28.0' RT)	P-7T	42"φ	6.80	(-) 1.45			1.80	0.55	
E-1	15+12 (34.0' LT)	Existing P-6 42" diameter		Core & tie to the South wall of the structure			2.60			Existing structure to remain
E-2	15+12 (34.0' RT)	Existing P-6 42" diameter		Core & tie to the North wall of the structure		2.80				Existing structure to remain
MH-4	15+10 (27.0' RT)	P-7T	42" x 42"	6.30	(-) 0.20	2.60	2.80	1.80	1.80	
MH-5	16+69 (25.0' RT)	P-7T	42"φ	6.65	(-) 2.50			(-) 0.50	1.80	
MH-6	18+08 (25.0' RT)	P-7T	42"φ	6.85	(-) 2.50			1.90	(-) 0.50	
E-3	19+76 (34.0' LT)	Existing P-6 42" diameter		Core & tie to the South wall of the structure			2.60			Existing structure to remain
E-4	19+76 (34.0' RT)	Existing P-6 42" diameter		Core & tie to the North wall of the structure		2.80				Existing structure to remain
MH-7	19+76 (28.0' RT)	P-7T	42" x 42"	6.40	(-) 0.10	2.60	2.80	1.90	1.90	
MH-8	20+96 (26.0' RT)	P-7T	42"φ	6.75	(-) 0.10			1.90	1.90	
E-5	22+40 (35.0' RT)	Existing P-6 42" diameter		Core & tie to the North wall of the structure		2.80				Existing structure to remain
E-6	22+40 (35.0' LT)	Existing P-6 42" diameter		Core & tie to the South wall of the structure			2.80			Existing structure to remain
MH-9	22+40 (28.0' RT)	P-7T	42" x 42"	6.40	(-) 0.10	2.80	2.80	1.90	1.90	
MH-10	23+47 (30.5' RT)	P-7T	42"φ	6.55	(-) 3.05			(-) 1.05	1.90	
MH-11	25+00 (27.5' RT)	P-7T	42"φ	6.85	(-) 3.05			1.80	(-)1.05	
S-1	26+69 (34.0' LT)	P-6	42" x 42"	6.05	(-) 3.00		(-) 1.00			
E-7	26+69 (34.0' RT)	Existing P-6 42" diameter		Core & tie to the Northwest wall of the structure		2.70				Existing structure to remain
MH-12	26+69 (29.0' RT)	J-7T	60"φ	6.30	(-) 3.00	(-) 1.00	2.70	0.70	1.80	
MH-13	27+85 (29.0' RT)	P-7T	42"φ	6.70	(-) 1.30	NE 1.75	SW 0.70			
E-8	30+44 (34.0' RT)	Existing P-6 42" diameter		Core & tie to the Northwest wall of the structure		NW 2.80				Existing structure to remain
E-9	30+44 (34.0' LT)	Existing P-6 42" diameter		Core & tie to the Southeast wall of the structure			SE 2.80			Existing structure to remain
MH-14	30+44 (29.0' RT)	P-7T	42" x 42"	6.25	(-) 0.25	NE 1.75	SW 1.75	SE 2.80	NW 2.80	
MH-15	32+00 (28.0' RT)	P-7T	42"φ	7.15	(-) 2.10	NE (-)0.10	SW 1.75			
MH-16	32+60 (37.5' RT)	P-7T	42" x 42"	7.30	(-) 2.10	NE 1.20	SW (-)0.10	Exist. SE 2.80	Exist. NW 2.80	Connect to exist. Pipe
S-2	32+60 (23.0' LT)	P-6	42" x 42"	7.15	2.00		SE 2.05			
S-3	34+00 (43.0' RT)	P-6	42" x 42"	7.65	2.40	NW 4.40				
MH-17	34+00 (37.5' RT)	P-7T	48"φ	7.75	(-) 2.30	NW 4.20	SE 4.40		SW 1.20	Pollution retardant baffle on southwest wall
S-4	34+17 (24.5' LT)	P-6	42"φ	7.70	2.20		SE 4.20			

CONFLICT TABLE

Conflict Point	Drainage Invert Elevation	Drainage Pipe Dia.	Force Main Top Elevation	Force Main Pipe Dia.	Water Top Elevation	Water Pipe Dia.	Cable Top Elevation	Cable Pipe Dia.	FPL Top Elevation	FPL Pipe Dia.
CP-1	+0.55	24"			+3.42 +2.62	8" 8"				
CP-2	+2.60	15"			(A)+2.10	16"				
CP-3	-0.50	24"			+2.70	8"				
CP-4	+2.60	15"			(A)+2.10	16"				
CP-5	+2.80	15"	(A)+2.30	8"	(A)+2.10	16"				
CP-6	-1.05	24"			+2.12	8"				
CP-7	-1.00	15"	(A)+4.40	8"	(A)+2.10	16"				
CP8	+0.70	24"	(A)+3.90	8"						
CP-9	+2.80	15"			(A)+2.10	16"				
CP-10	-0.10	24"			+3.10	8"	(A)+4.65	(A) 2"	(A)+4.65 (A)+4.65	(A) 2" (A) 2"
CP-11	+1.20	24"					(A)+5.10	(A) 2"		
CP-12	+4.20	15"			(A)+3.70	16"				

Elevations of pipes were not provided by the Utility Company, therefore, standard cover was assumed.

Assumed top and pipe diameter are preceded by an "A". Elevations on table are in NGVD.

SUMMARY OF QUANTITIES

Item No.	Description	Unit	Quantities
102-71-12	Temporary Barrier Wall (Furnish & Install) (Water filled)	L.F.	200
102-71-22	Temporary Barrier Wall (Relocate) (Water filled)	L.F.	200
102-74-1	Barricades (temporary - Types I, II, VP and Drum)	E.A./day	14400
102-74-2	Barricades (Temporary, Type III, 6')	E.A./day	2160
102-76A	Advance Warning Arrow Panel	E.A./day	720
102-77	High intensity flashing (Temporary, Type "B")	E.A./day	1440
102-91-1A	Pavement marking temporary (Solid) (Any width) (Yellow or White) (Paint)	L.F.	2000
102-99	Variable message sign (temporary)	E.A./day	40
104-10-3	Sediment Barrier	L.F.	100
104-18	Inlet Protection System	E.A.	19
110-3-1	Removal of structure (Inlet or Manhole) (Includes removal & disposal of structure, and plugging of abandoned pipe with concrete) (this item to be used when in conflict with new structure)	E.A.	2
121-70-2	Flowable Fill	C.Y.	20
327-70-01	Milling, 1" Average Depth	S.Y.	4900
331-72-10A-HMA	Roadway Pavement Restoration (Replace and match existing base thickness and asphalt course with 8" minimum, primed Limerock Base and 1" thick of HMA, Asphalt Work Category 3)	S.Y	2386
334-2-13-1	Hot Mix Asphalt, Traffic C, SP-9.5	Ton	510
400-1-15	Class I Concrete [(Miscellaneous) (Trench build-up, collars, pipe plugs, structure plugs etc.) (This item is contingent upon field conditions and may increased decreased or eliminated by the Engineer)]	C.Y.	5
425-1-36	Curb Inlet Type P-6 (Any dimension) (Max. 15' Deep)	E.A.	4
425-1-365	Inlet Top, Curb (Type P-6) (Includes adjustment to box, if necessary)	E.A.	1
425-1-907A	Pollution Retardant Baffle (Any type) (Any Dimension)	E.A.	1
425-2-41	Manhole (Type P-7T, Any dimension, maximum 15' deep)	E.A.	16
425-2-72	Manhole Type J-7T (Any dimension) (Max. 15' Deep)	E.A.	1
425-79	Core and Tie to exist. drainage structures. (Any pipe size hole opening) (Including mortar seal) (This item is contingent upon field conditions and may increased decreased or eliminated by the Engineer)	E.A.	9
425-82	Modify Structure-Cut to enlarge opening as needed in order to accommodate pipe due to utility conflict(s), brick and mortar as needed	E.A.	6
430-94-1-1	Desilting Pipe, 0 - 48"	L.F.	260
430-95-2	Desilting Drainage Structure	E.A.	14
430-171-115	Pipe Culvert - 15" Diameter (Round)	L.F.	441
430-171-124	Pipe Culvert - 24" Diameter (Round)	L.F.	147
443-70-4-2	French Drain (24" diameter pipe, trench depth 10 ft bls)	L.F.	2275
520-1-10	subgrade)	L.F.	380
520-1-15A	Concrete Valley Gutter (Variable width) (Including base preparation)	L.F.	60
522-1(1)	Concrete Sidewalk (4" thick)(3000 P.S.I.)(Including pedestrian ramps and sidewalk curbs)	S.Y.	160
522-2	Concrete Sidewalk (6" thick)(3000 P.S.I.)(Including pedestrian ramps and sidewalk curbs)	S.Y.	27
527-2	Detectable Warning on Walking Surface	S.F.	32
575-2A	Sodding - St Augustine, or match existing, includes watering and maintenance. Contingent item based on field conditions, may be increased, or decreased by the engineer.	S.Y.	600
706-1-12	Reflective Pavement Markers (class B, mono or bi-directional , all colors)	E.A.	200
711-11-121	Thermoplastic (White) (Solid) (6")	L.F.	435
711-11-141	Thermoplastic (White) (Skip) (6")	L.F.	240
711-11-170	Thermoplastic (White) (Arrow)	E.A.	4
711-11-221	Thermoplastic (Yellow) (Solid) (6")	L.F.	1500
711-11-241	Thermoplastic (Yellow) (Skip) (6")	L.F.	200
711-17	Removal of existing thermoplastic pavement markings	S.F.	1600

DARYL K. HILDOER LICENSE No. 68633 STATE OF FLORIDA PROFESSIONAL ENGINEER

ENGINEER OF RECORD:

6-3-16

DARYL K. HILDOER, P.E.
FLORIDA REGISTRATION P.E. No. 68633
CIVIL ENGINEER

REVISIONS								
DATE	BY	DESCRIPTION	DATE	BY	DESCRIPTION	DATE	BY	DESCRIPTION

N.W. 173 DR. FROM
N.W. 68 AVE. TO N.W. 72 AVE.

	NAME	DATE		NAME	DATE
DESIGNED BY	J.C.		DRAWN BY	U.	10-15-2014
CHECKED BY	F.G.		CHECKED BY		
SUPERVISED BY:					

MIAMI-DADE COUNTY

DEPARTMENT OF TRANSPORTATION AND PUBLIC WORKS
ROADWAY ENGINEERING AND RIGHT OF WAY DIVISION
STEPHEN P. CLARK CENTER
111 N.W. 1 ST
MIAMI, FLORIDA 33128

PROPOSED DRAINAGE STRUCTURE TABLE, CONFLICT TABLE AND SUMMARY OF QUANTITIES

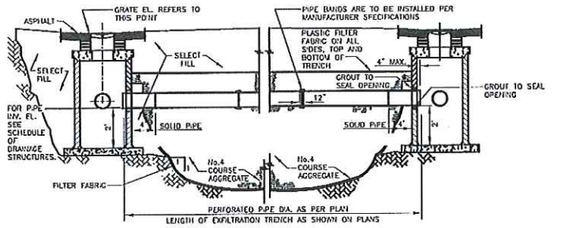

LONGITUDINAL SECTION

NOTE
1-AFTER THE COURSE AGGREGATE HAS BEEN PLACED TO THE PROPER ELEVATION IT SHALL BE CAREFULLY WASHED DOWN WITH CLEAN WATER TO ALLOW FOR INITIAL SETTLEMENT THAT MAY OCCUR. IF SETTLEMENT DOES TAKE PLACE, ADDITIONAL No.4 COURSE AGGREGATE WILL BE ADDED TO RESTORE THE PROPER ELEVATION SO THAT THE EXFILTRATION TRENCH IS COMPLETED IN ACCORDANCE WITH THE DETAILS.
2-REFER TO ROADWAY RESTORATION DETAIL FOR FRENCH DRAIN INSTALLATION UNDER PAVEMENT.

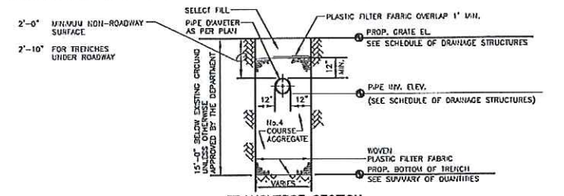

TRANSVERSE SECTION

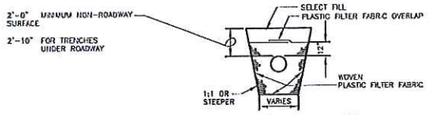

ALT. TRANS. SECTION*

NOTE
1. PLASTIC FILTER FABRIC SHALL BE WOVEN MONOFILAMENT POLYPROPYLENE GEOTEXTILE. PERMITTIVITY SHALL BE GREATER THAN 0.50 SEC-1 AND FLOW RATE GREATER OR EQUAL TO 50 gal/min.
2. * MAY BE USED IN AREAS WHERE TRENCH WALLS WILL NOT STAND VERTICAL, OR WHERE CAVE-IN BELOW THE WATER TABLE IS LIKELY TO OCCUR. TO BE USED AT THE ENGINEER'S DISCRETION.

EXFILTRATION TRENCH (FRENCH DRAIN)

SCALE: N.T.S.

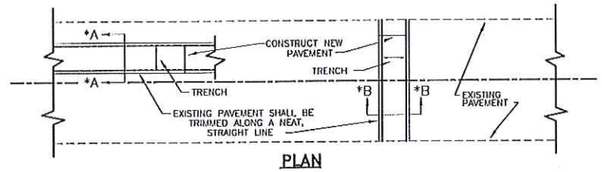

PLAN

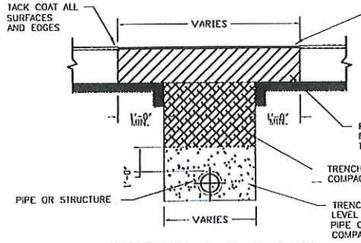

SECTION A-A & B-B

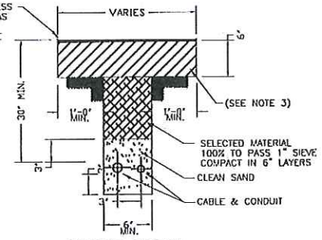

DIRECT BURIAL CABLE OR CONDUIT

NOTE:
1. PAVEMENT RESTORATION FOR LONGITUDINAL CUTS SHALL INCLUDE FULL LANE WIDTH RESURFACING FOR EACH LANE WITHIN WHICH THE CUT EXTENDS.
2. FOR LONGITUDINAL CUTS WHERE FULL LANE WIDTH RESURFACING WILL TAKE PLACE, THE PAVEMENT RESTORATION SHALL BE COMPLETED TO WITHIN ONE INCH OF THE SURFACE. THE REMAINING PAVEMENT IN THE AFFECTED LANE ON EITHER SIDE OF THE TRENCH WILL BE MILLED AND THE ENTIRE LANE WILL BE RESURFACED LEAVING TWO INCHES OF ASPHALT OVER THE TRENCH.
3. IN SOME CASES IF WILL BE NECESSARY TO OVERLAY MORE THAN ONE (1) LANE WITH ASPHALTIC CONCRETE TO SAFETY PAVEMENT SLOPE.
4. CONTRACTOR MAY ELECT TO BACKFILL WITH 1:10 SAND CEMENT MIX

PAVEMENT RESTORATION FOR TRENCHES CUT IN PUBLIC RIGHTS-OF-WAY

SCALE: N.T.S.

GENERAL NOTES FOR PIPE CULVERTS

CONTRACTOR HAS THE OPTION OF INSTALLING ANY PIPE MEETING THE REQUIREMENTS OF SECTION 443-2 OF THE FDOT STANDARD SPECIFICATIONS FOR ROAD AND BRIDGE CONSTRUCTION.

MINIMUM NUMBER OF PERFORATION IN PIPE CULVERTS		
PIPE DIAMETER (Inches)	OUTER SHELL	LINER
	No. of 3/8" Dia. Holes (PER LIN. FT. OF PIPE)	No. of 5/8" Dia. Holes (PER LIN. FT. OF PIPE)
15	100	50
18	120	60
24	160	80
30	200	100
36	240	120
42	275	140
48	315	150
54	355	180
60	395	200
72	470	235
84	550	275

NOTE:

PERFORATIONS SHALL BE UNIFORMLY SPACED AROUND THE FULL PERIPHERY OF THE PIPE TO WITHIN 4" OF EACH END OF EACH LENGTH OF PIPE. THE NUMBER OF PERFORATIONS PER LINEAR FOOT OF PIPE AND THE DIAMETER OF THE PERFORATIONS SHALL BE AS SHOWN ON THE ABOVE TABLE.

EXFILTRATION TRENCH (PIPE CULVERT NOTES)

SCALE: N.T.S.

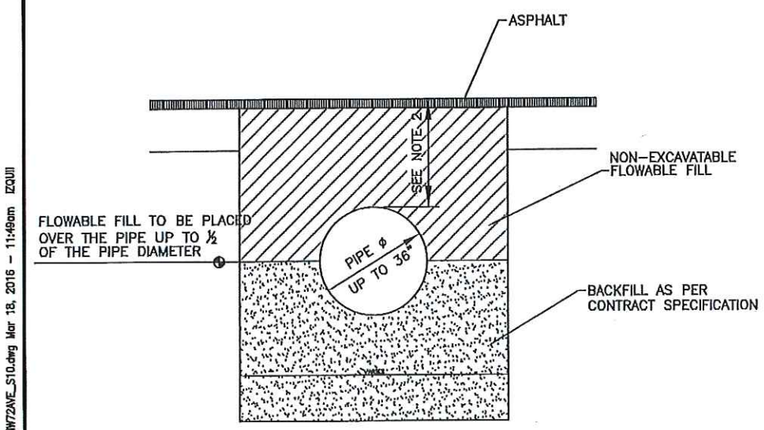

1- FOR USE IN AREAS, APPROVED BY THE ENGINEER, WHERE MINIMUM COVER OVER THE PIPE IS LESS THAN 2 FT, BUT NO LESS THAN 1 FT.

2- 1 FT MINIMUM COVER OVER THE PIPE INCLUDING UP TO 2" OF ASPHALT.

3- USE NON-EXCAVATABLE FLOWABLE FILL WITH A MINIMUM 28-DAY COMPRESSIVE STRENGTH OF 300 PSI.

NON-EXCAVATABLE FLOWABLE FILL DETAIL

SCALE: N.T.S.

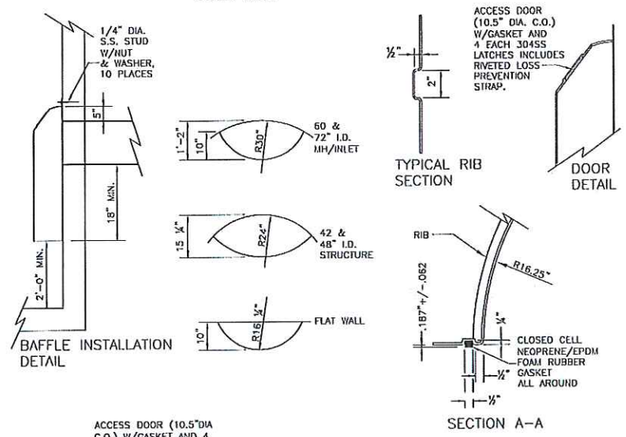

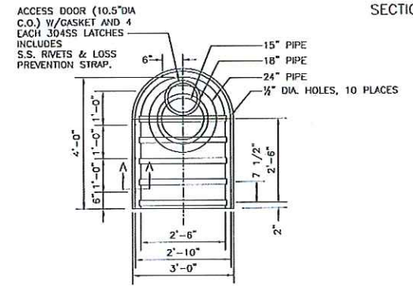

ABS STORM DRAIN BAFFLE WITH C.O. OR APPROVED EQUAL

STORMWATER BAFFLE

SCALE: N.T.S.

NOTE:
BAFFLE MATERIAL:
1/8" ABS PLASTIC WITH UV PROTECTED BLACK

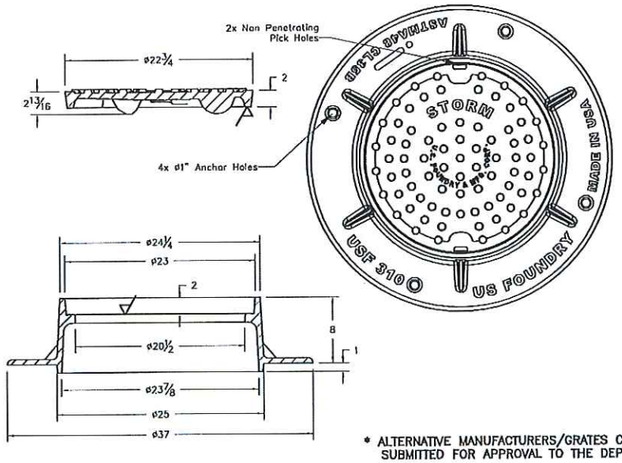

* ALTERNATIVE MANUFACTURERS/GRATES CAN BE SUBMITTED FOR APPROVAL TO THE DEPARTMENT

STORM SEWER MANHOLE FRAME AND COVER

SCALE: N.T.S.

ENGINEER OF RECORD:
DARYL K. HILDOER, P.E.
FLORIDA REGISTRATION P.E. No. 68633
CIVIL ENGINEER

3-18-16

DARYL K. HILDOER LICENSE No. 68633 STATE OF FLORIDA PROFESSIONAL ENGINEER

REVISIONS								
DATE	BY	DESCRIPTION	DATE	BY	DESCRIPTION	DATE	BY	DESCRIPTION

N.W. 173 DR. from N.W. 68 AVE. to N.W. 72 AVE.
DRAINAGE IMPROVEMENT PROJECT

	NAME	DATE		NAME	DATE
DESIGNED BY	J.C.		DRAWN BY	U.	11-10-2015
CHECKED BY	F.G.		CHECKED BY		
SUPERVISED BY:					

MIAMI-DADE COUNTY

DEPARTMENT OF TRANSPORTATION AND PUBLIC WORKS
ROADWAY ENGINEERING AND RIGHT OF WAY DIVISION
701 NW 1ST COURT
10TH FLOOR
MIAMI, FLORIDA 33136

STANDARD DETAILS

A:\DANNA\Ida-Como\NW173DR_NW68AVE-NW72AVE\NW173DR_NW68AVE-NW72AVE_S10.dwg Mar 18, 2016 - 11:49am EZQUI

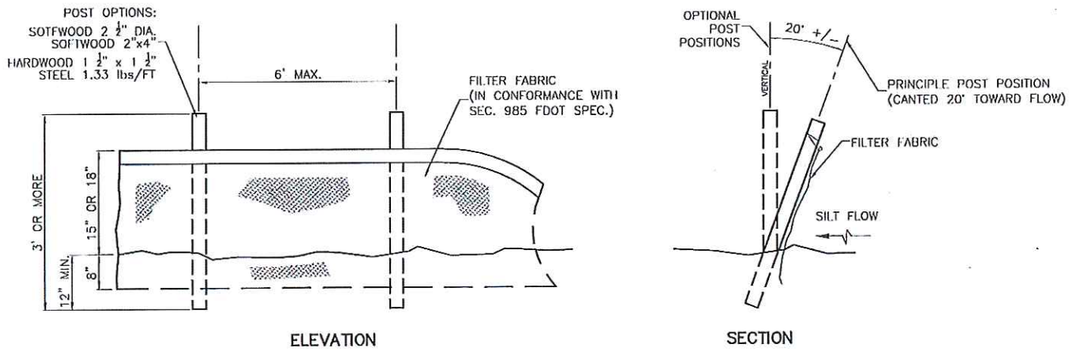

TYPE III SILT FENCE (TYP.)

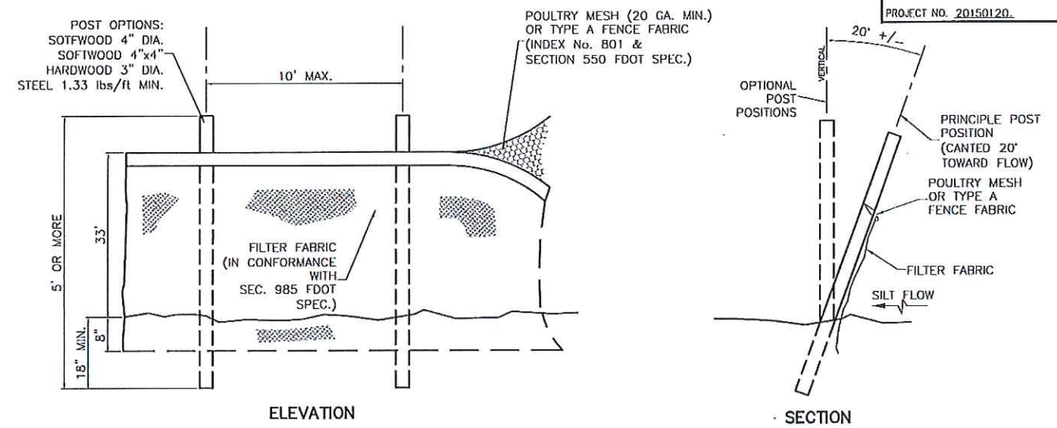

TYPE IV SILT FENCE (TYP.)

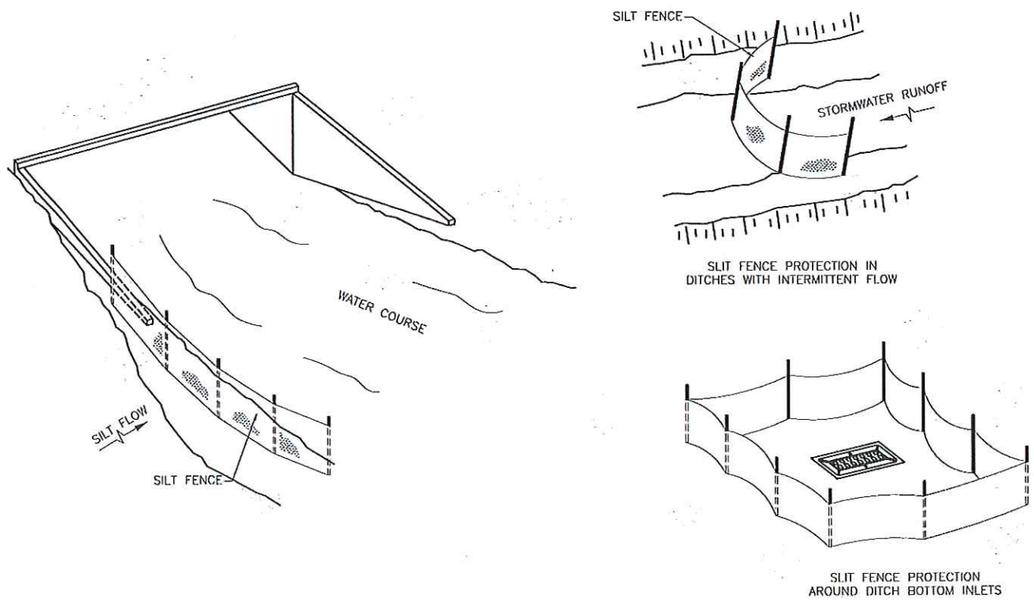

SILT FENCE APPLICATIONS (TYP.)

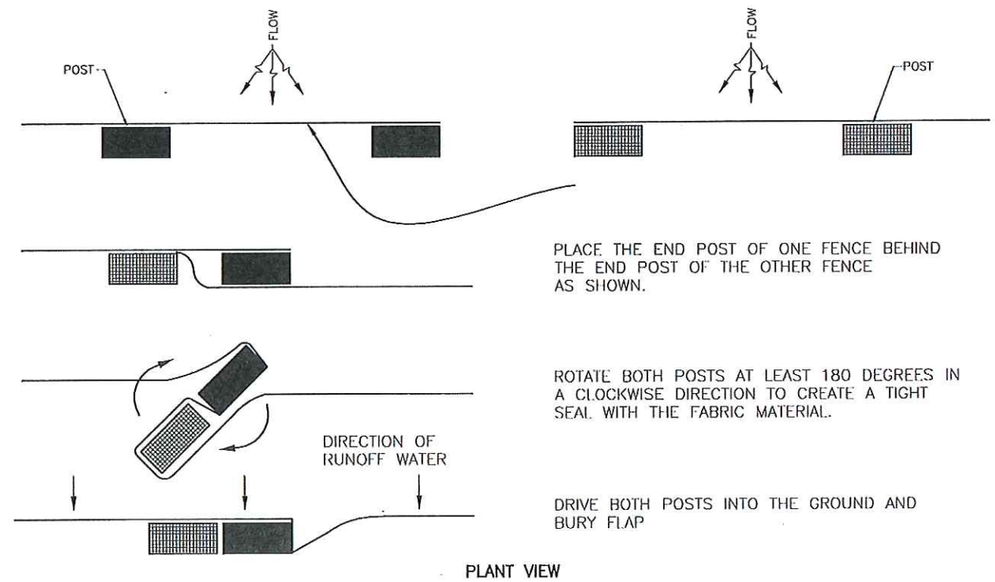

JOINING TWO SILT FENCES (TYP.)

NOTES FOR SILT FENCES:

1– TYPE III SILT FENCE TO BE USED AT MOST LOCATIONS. WHERE USED IN DITCHES, THE SPACING FOR TYPE III SILT FENCE SHALL BE IN ACCORDANCE WITH CHART 1, SHEET 1 OF 2010 FDOT DESIGN STANDARDS INDEX 102.

2– TYPE IV SILT FENCE TO BE USED WHERE LARGE SEDIMENT LOADS ARE ANTICIPATED. SUGGESTED USE IS WHERE FILL SLOPE IS 1:2 OR STEEPER AND LENGTH OF SLOPE EXCEEDS 25 FEET. AVOID USE WHERE THE DETAINED WATER MAY BACK INTO TRAVEL LANES OR OFF THE RIGHT OF WAY.

3– DO NOT CONSTRUCT SILT FENCES ACROSS PERMANENT FLOWING WATERCOURSES. SILT FENCES ARE TO BE AT UPLAND LOCATIONS AND TURBIDITY BARRIERS USED AT PERMANENT BODIES OF WATER.

4– WHERE USED AS SLOPE PROTECTION, SILT FENCE IS TO BE CONSTRUCTED ON 0% LONGITUDINAL GRADE TO AVOID CHANNELIZING RUNOFF ALONG THE LENGTH OF THE FENCE.

SEDIMENT BARRIERS (TYP.) OR APPROVED ALTERNATIVE

ENGINEER OF RECORD:
DARYL K. HILDOER, P.E.
FLORIDA REGISTRATION P.E. No. 68633
CIVIL ENGINEER

DARYL K. HILDOER LICENSED No. 68633 STATE OF FLORIDA PROFESSIONAL ENGINEER

REVISIONS								
DATE	BY	DESCRIPTION	DATE	BY	DESCRIPTION	DATE	BY	DESCRIPTION

N.W. 173 DR. from N.W. 68 AVE. to N.W. 72 AVE.
DRAINAGE IMPROVEMENT PROJECT

	NAME	DATE		NAME	DATE
DESIGNED BY	J.C.		DRAWN BY	E.L.	11-10-2015
CHECKED BY	F.G.		CHECKED BY		
SUPERVISED BY:					

MIAMI-DADE COUNTY

DEPARTMENT OF TRANSPORTATION AND PUBLIC WORKS
ROADWAY ENGINEERING AND RIGHT OF WAY DIVISION
STEPHEN P. CLARK CENTER
111 N.W. 1 ST.
MIAMI, FLORIDA 33128

SEDIMENT BARRIERS DETAILS

W:\DANIA\dd-Cons\NW173DR_NW68AVE-NW72AVE\NW173DR_NW68AVE-NW72AVE_S11.dwg Feb 25, 2015 - 11:35am IZQUI

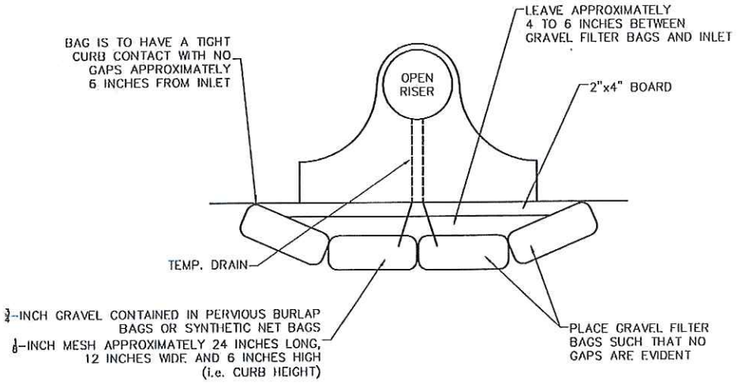

PLAN

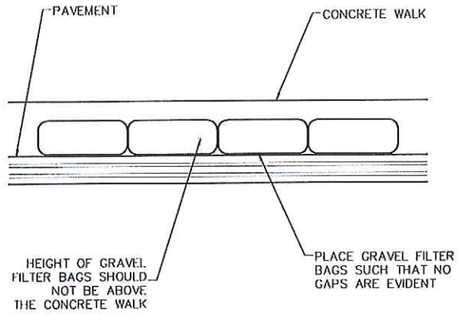

FRONT VIEW

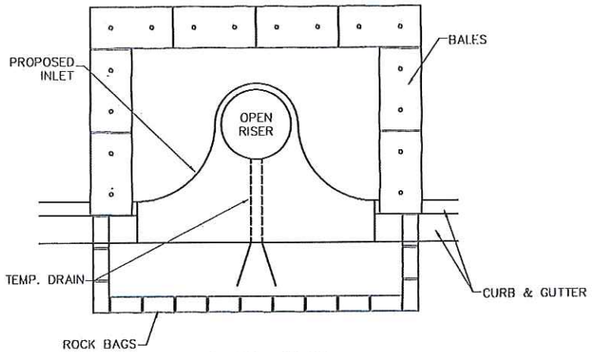

PARTIAL INLET

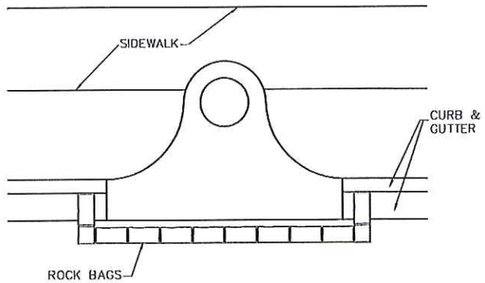

COMPLETED INLET

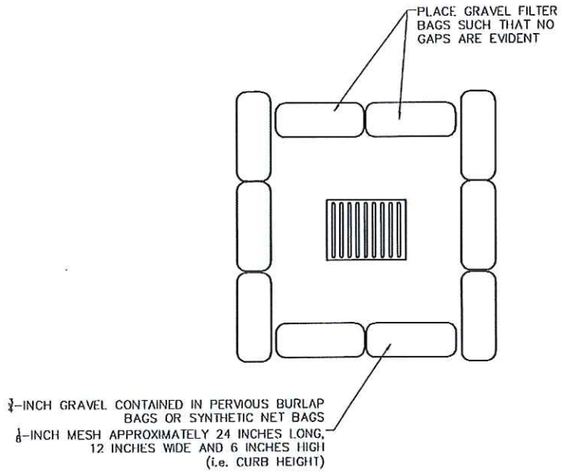

PLAN

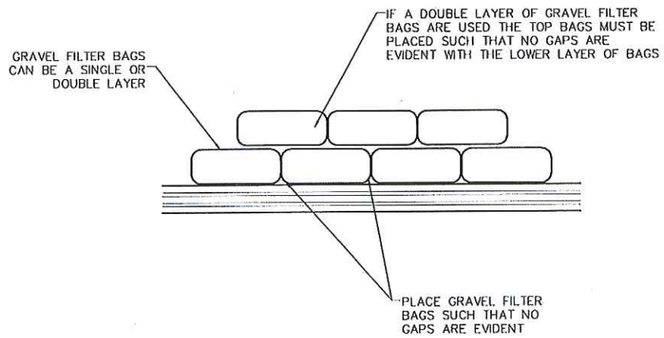

FRONT VIEW

GRAVEL FILTER BAGS

GRAVEL FILTER BAGS MAY BE USED ON PAVEMENT OR BARE GROUND

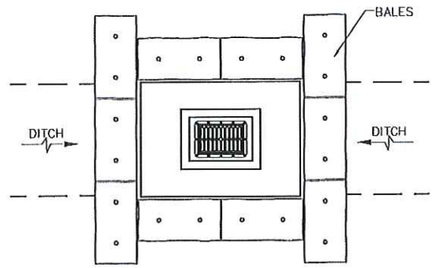

DITCH BOTTOM INLET

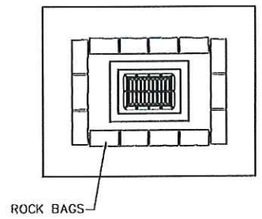

SWALE INLET

PROTECTION ALONG INLETS WITH ROCK BAGS BALES OR APPROVED ALTERNATIVES

NOTES FOR SYNTHETIC BALES OR BALE TYPE BARRIERS:

1– TYPE I AND II SYNTHETIC BARRIER SHOULD BE SPACED IN ACCORDANCE WITH CHART 1, SHEET 1 OF 2010 FDOT DESIGN STANDARDS INDEX 102.

2– BALES SHALL BE ANCHORED WITH TWO (2) 1"x2" (or 1" dia.) x 4' WOOD STAKES. STAKES OF OTHER MATERIAL OR SHAPE PROVIDING EQUIVALENT STRENGTH MAY BE USED IF APPROVED BY THE ENGINEER. STAKES OTHER THAN WOOD SHALL BE REMOVED UPON COMPLETION OF THE PROJECT.

3– RAILS AND POSTS SHALL BE 2"x4" WOOD. OTHER MATERIALS PROVIDING EQUIVALENT STRENGTH MAYBE USED IF APPROVED BY THE ENGINEER.

4– ADJACENT BALES SHALL BE BUTTED FIRMLY TOGETHER.

5– WHERE USED IN CONJUNCTION WITH SILT FENCE, BALES SHALL BE PLACED ON THE UPSTREAM SIDE OF THE FENCE.

INLET PROTECTION SYSTEM (TYP.) OR APPROVED ALTERNATIVE

DARYL K. HILDOER LICENSE No. 68633 STATE OF FLORIDA PROFESSIONAL ENGINEER

ENGINEER OF RECORD:
DARYL K. HILDOER, P.E.
FLORIDA REGISTRATION P.E. NO. 68633
CIVIL ENGINEER

8-18-16

REVISIONS								
DATE	BY	DESCRIPTION	DATE	BY	DESCRIPTION	DATE	BY	DESCRIPTION

N.W. 173 DR. from N.W. 68 AVE. to N.W. 72 AVE.
DRAINAGE IMPROVEMENT PROJECT

	NAME	DATE		NAME	DATE
DESIGNED BY	J.C.		DRAWN BY	J.L.	11-10-2015
CHECKED BY	F.G.		CHECKED BY		
SUPERVISED BY:					

MIAMI-DADE COUNTY

DEPARTMENT OF TRANSPORTATION AND PUBLIC WORKS
ROADWAY ENGINEERING AND RIGHT OF WAY DIVISION
STEPHEN P. CLARK CENTER
111 NW 1 ST.
MIAMI, FLORIDA 33128

INLET PROTECTION SYSTEM DETAILS

K:\DANIA\dot-Cons\NW173DR_NW68AVE-NW72AVE\NW173DR_NW68AVE-NW72AVE_S12.dwg Mar 01, 2018 - 3:10pm IZQUII

STORMWATER POLLUTION PREVENTION PLAN

Narrative Description

The Stormwater Pollution Prevention Plan (SWPPP) Narrative Description contains references to the Contract Documents, the State of Florida Erosion and Sediment Control Designer and Reviewer Manual (E&SC Manual), the FDOT Design Standards, and other sheets of these Construction Plans. The complete SWPPP is comprised of several items including: this narrative description, the documents referenced in this narrative, the Contractor's approved Erosion Control (ECP) prepared and submitted in accordance with the Contract Documents, and reports of inspections made during construction. All of which are complementary to the signed and certified SWPPP if one is provided by the Department. Contractor is required to maintain copies of the aforementioned items on site, including all applicable permits.

1. Site Description

a. Nature of Construction Activities: The project consists of retrofitting of drainage infrastructure to a residential roadway.

b. Sequence of Major Soil Disturbing Activities: The Contractor shall provide in the ECP a detailed sequence of construction for all construction activities. Each construction phase requires the installation of perimeter control, after clearing and grubbing as necessary for the installation of the controls, prior to beginning any work. The Contractor shall follow the sequence of major activities below, unless the Contractor proposes a different sequence that is equal or better at controlling erosion and trapping sediment and is approved by the Engineer.

1) Clearing and grubbing, earthwork, drainage improvements construction.
2) Final grading and landscaping where necessary.

c.Area Estimates (Acre)

1) Total Site Area: 7.27 A.C.
2) Total Area of the site that is expected to be disturbed: 2.21 A.C.

d. Existing data describing the soil or the quality of any discharge from the site and an estimate of the size of the drainage area for each discharge point:

1) Rational runoff coefficient
a) Before: 0.40
b) During: 0.45
c) After construction: 0.40

2) Existing data describing the soil or the quality of discharge from the site: According to the United States Department of Agriculture Natural Resources Conservation Service Soil Survey Report of Dade County Area, Florida, the soil encountered on the project are of urban land Udorthents Association soil, which are categorized as moderately well drained.

3) The size of the drainage area for each outfall: N/A . This project has no outfall.

4) The location of each outfall is provided in item 1.f. below. N/A . This project has no outfall.

e. Site Map: The associated construction plan sheets will be used as the site map. Locations of the required information are described below.The sheet numbers for all items discussed are identified on the Cover Sheet of the construction plans.

1) Drainage patterns and approximate slopes anticipated after major grading activities: The slopes of the site can be seen on the construction plan sheets.

2) Areas of Soil Disturbance: The areas to be disturbed are indicated on the construction plan sheets. Any areas where permanent features are shown to be constructed above or below ground will be disturbed.

3) An outline of areas which may not be disturbed: These areas of the Project outside the clearing and grubbing and construction activities which comprised of those that are not subject to any soil disturbing activities.

4) The location of major structural and nonstructural controls identified in the plan:Temporary sediment control devices shall be installed all locations where disturbance of solids will occur. Additional measures may be required as necessary where stormwater runoff has the potential to reach surface waters or offsite stormwater collection facilities.

5) The location of areas where stabilization practices are expected to occur, surface waters, wetlands and locations where stormwater is discharged to a surface water or MS4: Areas of permanent stabilization are shown on the Construction Plan Sheets.

f. Discharge point(s): N/A. This project has no outfall.

2. Controls

a. Erosion and Sediment Controls: The Contractor shall describe in the ECP the proposed stabilization and structural practices. The Contractor may choose to accept the following guidelines or modify them in the ECP, subject to approval by the Engineer. As work progresses, the Contractor shall modify the plan to adapt to seasonal variation, changes in construction activities, and the need for better management practices. For each construction phase install perimeter controls after clearing and grubbing necessary for installation of controls but before beginning other work for the construction phase. Remove perimeter controls only after all upstream areas are stabilized. In addition :

. Furnish and place inlet protection systems to control erosion and siltation.

. Install soil tracking prevention devices (STPDs) at all common areas where construction vehicles will be entering and exiting the construction site.

. Sediment barriers shall be installed and at the toe of slope of embankments and at locations as described in the Erosion and Sediment Control Details and the E&SC Manual.

. Inlet protection systems shall be used for all existing and proposed inlets subject to sediment runoff.

. Clearing and grubbing operations will be controlled so as to minimize unprotected erodible areas exposed to weather. Areas outside the limits of construction shall not be disturbed.

. Excavated material shall not be deposited in locations where the material could be washed away by high water, rain or stormwater runoff. Stockpiles shall be covered or encircle with sediment barriers.

1) Stabilization Practices: In the ECP, the Contractor shall describe the stabilization practices proposed to control erosion. The Contractor shall initiate all stabilization measures as soon as practical, but in no case more than 7 days, in portions of the site where construction activities have temporarily or permanently ceased. The stabilization practices shall include at least the following, unless otherwise approved by the Engineer.

a) Temporary: Includes sod, mulch, and artificial coverings in accordance with the Contract Documents.

b) Permanent: Includes asphalt or concrete surface, sod, roadside swales, and endwalls in accordance with the Contract Documents.

2) Structural Practices: In the ECP, the Contractor shall describe the proposed structural practices to control trap sediment and otherwise prevent the discharge of pollutants from exposed areas of the site. Sediment controls shall be in place before disturbing soil upstream of the control. The structural practices shall include at least the following, unless otherwise approved by the Engineer.

a) Temporary: Includes inlet protection systems, sediment barriers, turbidity barriers and soil tracking prevention devices as per the ES&C Manual and the Contract Documents. See Erosion and Sediment Control Details for more information. All sediment controls shall be in place prior to any soil disturbing activity.

b) Permanent: Includes roadside swales.

b. Permanent Stormwater Management Controls: Stormwater runoff will be conveyed in a swale systems with inlets and French drains.

c. Control for Other Potential Pollutants: The Contractor shall practice good housekeeping by instituting a clean, orderly construction site. The following controls shall be implemented to further reduce pollution at the project site:

1) Waste Disposal: In the ECP, the Contractor shall describe the proposed methods to prevent the discharge of solid materials, including building materials, to waters of the United States. The proposed methods shall include at least the following, unless otherwise approved by the Engineer:

a) The Contractor shall demonstrate the proper disposal of all construction waste generated within the project limits. Waste may include, but not be limited to, vegetation from clearing and grubbing activities, packaging materials, scrap building materials, litter from traveling public, sewage from sanitary facilities, herbicides and pesticides and their containers, and hydrocarbon products. Contractor shall designate a waste collection area onsite and delineate the area on the SWPPP Site Map.

b) Sanitary/septic facilities shall be provided and maintained in a neat and sanitary condition, for the use of the Contractor's employees as necessary to comply with the requirements and regulations of the State and local boards of health. A licensed Sanitary Waste Management Contractor as required by State Regulations will collect all sanitary waste from portable units.

c) The Contractor will provide litter control and collection within the Project limits during construction activities. Contractor will provide an adequate number of litter containers with lids at the staging, stockpile and field office areas (as applicable). Waste collection will be scheduled so that containers are emptied prior to overflow. Spilled litter containers will be cleaned up immediately.

2) Off-Site Vehicle Tracking & Generation of Dust: In the ECP, the Contractor shall describe the proposed methods for minimizing offsite vehicle tracking of sediments and generating dust. The proposed methods shall include at least the following, unless otherwise approved by the Engineer.

a) Stabilizing construction entrances as necessary according to the E&SC Manual and the Contract Documents.

b) The Contractor shall take measures to insure the cleanup of sediments that have been tracked by vehicles or have been transported by wind or stormwater about the site or onto nearby roadways.

c) Removing excess dirt from roads daily.

d) Using roadway sweepers during dust generating activities such as excavation and milling operations.

e) Stabilized construction entrances and construction roads, if appropriate, shall be implemented in order to reduce off-site tracking.

f) Loaded haul trucks shall be covered with tarpaulin. Excess dirt on the road shall be removed daily.

3) State or Local Regulations: In the ECP, the Contractor shall describe the proposed procedures to comply with applicable State and local regulations for waste disposal, and sanitary sewer or septic systems.

4) Application of Fertilizer and Pesticides

a) The application and handling of herbicides and pesticides shall be in compliance with the manufacture recommended method and in accordance with FDOT Standard Specifications for Road and Bridge Construction as modified by the Contract Documents.

b) Herbicides and pesticides shall be stored onsite in their original containers with product label intact.

5) Toxic Substances and Materials

a) In the ECP, the contractor shall provide a list of toxic substances and materials that are likely to be used on the job and provide a plan addressing the generation, application, migration, storage, and disposal of these substances.

b) Contractor shall provide equipment necessary to contain and clean up spills of hazardous materials, including petroleum products. Spills shall be contained and cleaned up immediately after they occur. Spilled material and the equipment used to clean up the spill shall not come in contact with surface waters or be introduced into stormwater. Disposal of surplus product will be done according to manufacturer recommended method.

c) Contractor shall provide a project specific Hazardous Materials Spill Control Plan in order to address the handling of hydrocarbon and hazardous materials.

d) Petroleum products shall be stored in covered areas with secondary containment surrounding container.

e) Toxic/hazardous materials exposed during construction activities shall be handled per the FDOT Standard Specifications for Road and Bridge Construction as modified by the Contract Documents.

d. Approved State and Local Plans and Permits

Not applicable to this project.

3. Maintenance: In the ECP, the Contractor shall provide a plan for maintaining all erosion and sediment controls throughout construction. The maintenance plan shall at a minimum, comply with the following:

a. Sediment Barriers: Twelve (12) months, or as required, replacement interval in accordance with Contract's Specifications.

b. Inlet Protection Systems at inlets-Check after rainfall events. Clean if clogging occurs.

c. The maintenance of these devices shall occur until the Engineer has deemed an area permanently stabilized. It will be the responsibility of the Contractor to remove erosion and sediment control devices once they have served their purpose.

4. Inspection

a. The Contractor shall be required to conduct daily visual inspections of all temporary and permanent erosion control measures along the project corridor. The Contractor shall maintain, repair and/or replace these items as necessary.

b. The Engineer shall have an Inspector review the project's temporary and permanent erosion control measures for the items listed below at least once every seven (7) calendar days and/or within 24 hours of the end of a storm that is 0.5 inches or greater. A written inspection report (form attached) is required every seven calendar days or within 24 hours of the end of a storm that deposits 0.5 inches of rain or greater.

1) Outfalls into the waters of the United States

2) Points of discharge to municipal separated storm sewer systems

3) Disturbed areas of the site that have not been stabilized

4) Areas used for storage of materials that are exposed to precipitation

5) Structural controls

6) Stormwater management systems

7) Locations where vehicles enter or exit this site

8) Check that the approved or revised Erosion Control Plan is followed

9) Where sites have been stabilized, inspections shall be conducted at least once every month.

c. The Contractor shall initiate repairs within 24 hours of inspections that indicate items are not in good working order.

d. If inspections indicate that the installed stabilization and structural practices are not sufficient to minimize erosion, retain sediment, and prevent discharging pollutants, the Contractor shall provide additional measures, as approved by the Engineer.

5. Non-Stormwater Discharges

a. In the ECP, the Contractor shall identify all anticipated non-stormwater discharges (except flows from fire fighting activities). The Contractor shall describe the proposed measures to prevent pollution from these non-stormwater discharges.

b. If contaminated soil or groundwater is encountered during construction, the Contractor is to cease operations in that area. The Contractor shall contact the Miami-Dade County Regulatory and Economic Resources Compliance Desk, at (305) 372-6955.

6. Contractors/subcontractors. Certification.

a. For each measure identified in the SWPPP, the Contractor and/or subcontractor(s) that will implement the measure must sign a copy of the certification statement, provide in Appendix A of the SWPPP, prior to conducting any construction actiities at the Sites. (N/A)

DARYL K. HILDOER, LICENSE No. 68833, STATE OF FLORIDA, PROFESSIONAL ENGINEER
ENGINEER OF RECORD:
3-18-16
DARYL K. HILDOER, P.E.
FLORIDA REGISTRATION P.E. No. 68833
CIVIL ENGINEER

REVISIONS								
DATE	BY	DESCRIPTION	DATE	BY	DESCRIPTION	DATE	BY	DESCRIPTION

N.W. 173 DR. from N.W. 68 AVE. to N.W. 72 AVE.
DRAINAGE IMPROVEMENT PROJECT

	NAME	DATE		NAME	DATE
DESIGNED BY	J.C.		DRAWN BY	I.I.	11-10-2015
CHECKED BY	F.C.		CHECKED BY		
SUPERVISED BY:					

MIAMI-DADE COUNTY
DEPARTMENT OF TRANSPORTATION AND PUBLIC WORKS
ROADWAY ENGINEER AND RIGHT OF WAY DIVISION

STORMWATER POLLUTION PREVENTION PLAN

W:\DANIA\dc-Cano\NW173DR_NW68AVE-NW72AVE\NW173DR_NW68AVE-NW72AVE_S13.dwg Mar 18, 2016 - 11:20am IZQUII