MIAMI-DADE COUNTY
PRODUCT CONTROL SECTION
11805 SW 26 Street, Room 208
Miami, Florida 33175-2474
T (786) 315-2590 F (786) 315-2599
www.miamidade.gov/economy

DEPARTMENT OF REGULATORY AND ECONOMIC RESOURCES (RER)
BOARD AND CODE ADMINISTRATION DIVISION

NOTICE OF ACCEPTANCE (NOA)

SIW Solution, LLC
975 S. Congress Ave. # 102
Delray Beach, Florida 33445

SCOPE:

This NOA is being issued under the applicable rules and regulations governing the use of construction materials. The documentation submitted has been reviewed and accepted by Miami-Dade County RER -Product Control Section to be used in Miami Dade County and other areas where allowed by the Authority Having Jurisdiction (AHJ).

This NOA shall not be valid after the expiration date stated below. The Miami-Dade County Product Control Section (In Miami Dade County) and/or the AHJ (in areas other than Miami Dade County) reserve the right to have this product or material tested for quality assurance purposes. If this product or material fails to perform in the accepted manner, the manufacturer will incur the expense of such testing and the AHJ may immediately revoke, modify, or suspend the use of such product or material within their jurisdiction. RER reserves the right to revoke this acceptance, if it is determined by Miami-Dade County Product Control Section that this product or material fails to meet the requirements of the applicable building code.

This product is approved as described herein, and has been designed to comply with the Florida Building Code, including the High Velocity Hurricane Zone.

DESCRIPTION: Series "500-9 " Aluminum Outswing Doors w/wo Sidelite <u>or</u> Transom

APPROVAL DOCUMENT: Drawing No. **W13-68 Rev F**, titled "Series 500-9 Alum Outswing Entrance Door (L.M.I.)", sheets 1, 2, 3, 4, 4.1 through 16 of 16, dated 12-30-13 and last revised on Jan 08, 2019, prepared by Al-Farooq Corporation, signed and sealed by Javad Ahmad, P. E., bearing the Miami-Dade County Product Control Revision stamp with the Notice of Acceptance number and expiration date by the Miami-Dade County Product Control Section.

MISSILE IMPACT RATING: Large and Small Missile Impact

Limitations:

1. See DP tables for X or XX in sheets **<u>2</u> & <u>3</u>**, O/X or O/XX in sheet **<u>4</u>,** for O in sheet **<u>4.1</u>** and door w/ sidelites (Narrow stiles w/wo Reinforcements and/or Wide stiles) in sheet **<u>5</u>**. Lower DP from door w/ transom or sidelite may control.
2. Max single **<u>door</u>** leaf width mulled with sidelites in sheet **<u>5</u>**, shall not exceed = 36-91/6".
3. **ADA** threshold options **#<u>1</u>** and **<u>#2</u>** are **<u>not</u>** rated for water Resistance* and limited to DP=+*/- **62** PSF.
4. Glass **A** is limited to DP=+/- **70** PSF. Glass lites wider than 36" shall have two setting blocks per FBC requirements.

LABELING: Each unit shall bear a permanent label with the manufacturer's name or logo, city, state and series and following statement: "Miami-Dade County Product Control Approved", noted herein.

RENEWAL of this NOA shall be considered after a renewal application has been filed and there has been no change in the applicable building code negatively affecting the performance of this product.

TERMINATION of this NOA will occur after the expiration date or if there has been a revision or change in the materials, use, and/or manufacture of the product or process. Misuse of this NOA as an endorsement of any product, for sales, advertising or any other purposes shall automatically terminate this NOA. Failure to comply with any section of this NOA shall be cause for termination and removal of NOA.

ADVERTISEMENT: The NOA number preceded by the words Miami-Dade County, Florida, and followed by the expiration date may be displayed in advertising literature. If any portion of the NOA is displayed, then it shall be done in its entirety.

INSPECTION: A copy of this entire NOA shall be provided to the user by the manufacturer or its distributors and shall be available for inspection at the job site at the request of the Building Official.

This NOA **revises NOA # 17-1115.01** (former **SIW Impact Window, LLC)** consists of this page 1 and evidence pages E-1, E-2 & E-3, as well as approval document mentioned above.

The submitted documentation was reviewed by **Ishaq I. Chanda, P.E.**

MIAMI-DADE COUNTY APPROVED

2/19/19

NOTICE OF ACCEPTANCE: EVIDENCE SUBMITTED

1. Evidence submitted under previous approvals

A. DRAWINGS

1. Manufacturer's die drawings and sections (submitted under files # see below)
2. Drawing No. **W13-68 Rev C**, titled "Series 500-9 Alum Outswing Entrance Door (L.M.I.)", sheets 1, 2, 3, 4, 4.1 through 16 of 16, dated 12-30-13 and last revised on Oct 06, 2015, prepared by Al-Farooq Corporation, signed and sealed by Javad Ahmad, P.E.

B. TESTS (submitted under file **# 14-0305.06**)

1. Test reports on: 1) Air Infiltration Test, per FBC, TAS 202-94
   2) Uniform Static Air Pressure Test, Loading per FBC TAS 202-94
   3) Water Resistance Test, per FBC, TAS 202-94
   4) Large Missile Impact Test per FBC, TAS 201-94
   5) Cyclic Wind Pressure Loading per FBC, TAS 203-94
   6) Forced Entry Test, per FBC 2411 3.2.1, TAS 202-94

   Along with installation diagram of aluminum Outswing doors w/wo sidelite and transom, prepared by Black Water Testing Inc., Test reports **#BT-SIW-13-001** and **BT-SIW-13-006** dated June 10, 2013 and December 11, 2013, both signed and sealed by Yamil Kuri, P.E.
   Note: The above test reports have been revised by an addendum letter dated 05/09/14, issued by Black Water Testing Inc., signed and sealed by Yamil Kuri, P.E.
2. Test reports on: 1) Air Infiltration Test, per FBC, TAS 202-94
   2) Uniform Static Air Pressure Test, Loading per FBC TAS 202-94
   3) Water Resistance Test, per FBC, TAS 202-94
   4) Large Missile Impact Test per FBC, TAS 201-94
   5) Cyclic Wind Pressure Loading per FBC, TAS 203-94
   6) Forced Entry Test, per FBC 2411 3.2.1, TAS 202-94

   Along with installation diagram of aluminum Inswing / Outswing doors w/wo sidelite and transom, prepared by Hurricane Engineering and Testing, Test Report No. HETI 07-4339, HETI 07-4371, HETI 07-4371, HETI 07-4372, HETI 07-4373and HETI 07-4374 dated 01/03/08, HETI-08-2184A & B dated 10/01/08, HETI 09-2572A, HETI 09-2573 dated June 30, 2009, all signed and sealed by Candido Font, P.E.

C. CALCULATIONS

1. Anchor verification calculations complying with FBC2014 (**5th** Edition), prepared by Al Farooq Corporation, dated MAR 27, 2015 and last revised on Jul 30, 2015, signed and sealed by Javad Ahmad, P.E.
2. Glazing complies w/ ASTME-1300-04 & -09

D. QUALITY ASSURANCE

1. Miami Dade Department of Regulatory and Economic Resources (RER).

Ishaq I. Chanda

Ishaq I. Chanda, P.E.
Product Control Unit Supervisor
NOA No. 19-0131.14
Expiration Date: May 22, 2023
Approval Date: February 28, 2019

NOTICE OF ACCEPTANCE: EVIDENCE SUBMITTED

E. MATERIAL CERTIFICATIONS

1. Notice of Acceptance No. **14-0916.11** issued to **Kuraray America, Inc.** (Former E.I. DuPont DeNemours & Co., Inc. for the "**Sentry Glass ® (Clear and White) Glass Interlayers**", expiring on 07/04/18.
2. Notice of Acceptance No. **11-0624.01** issued to **Kuraray America, Inc**. (former E.I. DuPont DeNemours & Co., Inc.) for the "**Butacite ® PVB interlayer**", expiring on 12/11/16.

F. STATEMENTS (Except item #1, all other submitted under file # **14-0305.06**)

1. Statement letter of conformance to FBC 2014 (**5th** Edition) and letter of no financial interest, prepared by Al Farooq Corporation, dated 03/25/15, signed and sealed by Javad Ahmad, P.E.
2. Lab compliance as part of the above referenced test report.
3. Addendum letter dated 05/09/14 ref **#BT-SIW-13-001** and **BT-SIW-13-006**, issued by Black Water Testing Inc., signed and sealed by Yamil Kuri, P.E.
4. Addendum letter ref HETI-07-4374 dated May 06, 2008, issued by HETI, signed and sealed by Candido Font, P.E.

G. OTHER

1. This NOA **revises NOA # 14-0305.06,** expiring 05/22/18**.**
2. Test proposal dated 05/23/1, approved by RER.

2. Evidence submitted under previous approvals

A. DRAWINGS

1. Drawing No. **W13-68 Rev E**, titled "Series 500-9 Alum Outswing Entrance Door (L.M.I.)", sheets 1, 2, 3, 4, 4.1 through 16 of 16, dated 12/30/13 and last revised on 11/07/17, prepared by Al-Farooq Corporation, signed and sealed by Javad Ahmad, P.E.

B. TESTS

1. None.

C. CALCULATIONS

1. Structural analysis complying with **FBC 5th Edition (2014)** and **FBC 6th Edition (2017)**, prepared by Al Farooq Corporation, dated 11/03/2017, signed and sealed by Javad Ahmad, P.E.

D. QUALITY ASSURANCE

1. Miami Dade Department of Regulatory and Economic Resources (RER).

E. MATERIAL CERTIFICATIONS

1. Notice of Acceptance No. **17-0808.02** issued to **Kuraray America, Inc.** for their "**Sentry Glas ® (Clear and White) Glass Interlayers**", expiring on 07/04/23.
2. Notice of Acceptance No. **16-1117.01** issued to **Kuraray America, Inc**. for their "**Trosifol ® Ultraclear , Clear and Color PVB Glass Interlayers**", expiring on 07/08/19.

F. STATEMENTS

1. Statement letter of conformance to **FBC 5th Edition (2014)** and **FBC 6th Edition (2017)** and letter of no financial interest, prepared by Al Farooq Corporation, dated 11/03/17, signed and sealed by Javad Ahmad, P.E.

G. OTHER

1. This NOA revises and renews NOA # **15-0406.13**, expiring 05/22/18.

Ishaq I. Chanda

Ishaq I. Chanda, P.E.
Product Control Unit Supervisor
NOA No. 19-0131.14
Expiration Date: May 22, 2023
Approval Date: February 28, 2019

NOTICE OF ACCEPTANCE: EVIDENCE SUBMITTED

3. **New Evidence submitted.**

A. DRAWINGS

1. Drawing No. **W13-68 Rev F**, titled "Series 500-9 Alum Outswing Entrance Door (L.M.I.)", sheets 1, 2, 3, 4, 4.1 through 16 of 16, dated 12-30-13 and last revised on Jan 08, 2019, prepared by Al-Farooq Corporation, signed and sealed by Javad Ahmad, P. E.

B. TESTS

1. None.

C. CALCULATIONS

1. None.

D. QUALITY ASSURANCE

1. Miami Dade Department of Regulatory and Economic Resources (RER)

E. MATERIAL CERTIFICATIONS

1. Notice of Acceptance No. **17-0808.02** issued to **Kuraray America, Inc.** (Former E.I. DuPont DE Nemours & Co., Inc. for the "**Sentry Glass ® (Clear and White) Glass Interlayers**", expiring on 07/04/23.
2. Notice of Acceptance No. **16-1117.01** issued to **Kuraray America, Inc**. for their "**Trosifol ® Ultraclear , Clear and Color PVB Glass Interlayers**", expiring on 07/08/19.

F. STATEMENTS (submitted under file **#18-0116.11)**

1. Letter of conformance to FBC 2017 (6th edition) and No Financial interest dated NOV 07, 2017, prepared by Al Farooq Corporation, , signed and sealed by Java Ahmad, P.E.
2. Statement letter dated DEC 28, 2019, issued by SIW Impact Window, LLC that it has sold all assets of Exhibit "A" NOA(s), equipment's, accessories and "Know how" and No longer manufacture the products and request to rescind the Exhibit "A" NOA(s), signed by Abdiel Lopez, Manager.
3. Statement letter dated DEC 30, 2019, issued by SIW Solution, LLC that it has purchased all assets of Exhibit "A" NOA(s), equipment's, accessories and "Know how" and request Name change of the Exhibit "A" NOA(s) , signed by Steven A. Tourek, Secretary.

G. OTHER

1. This **NOA # 17-1115.01** (former **SIW Impact Window, LLC)**, expiring 05/22/2023.
2. Bill of sale dated DEC 28, 2018 between SIW Impact Window (Seller) and SIW Solution, LLC, (purchaser), signed by respective company's representative, Abdiel Lopez, Manager and Steven A. Tourek, Secretary.
3. Division of corporation listing of SIW LLC, as active status

Ishaq I. Chanda

Ishaq I. Chanda, P.E.
Product Control Unit Supervisor
NOA No. 19-0131.14
Expiration Date: May 22, 2023
Approval Date: February 28, 2019

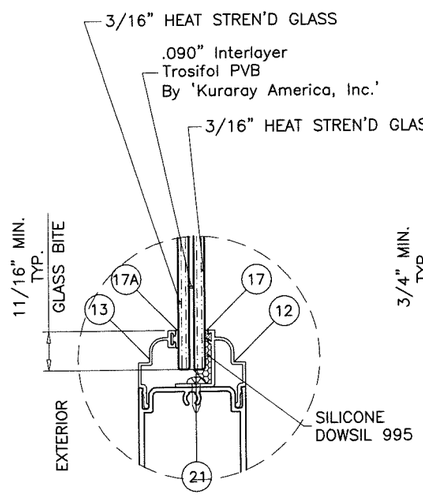

GLASS TYPE 'A'

7/16" OVERALL LAM. GLASS

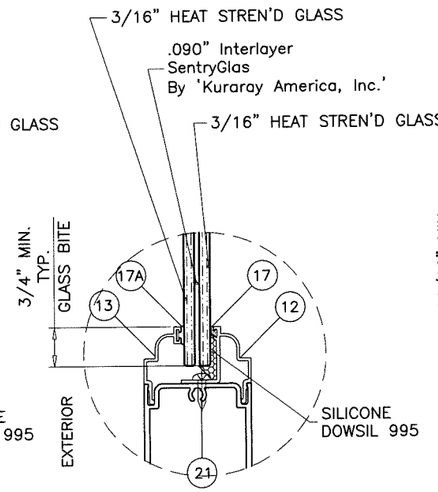

GLASS TYPE 'B'

7/16" OVERALL LAM. GLASS

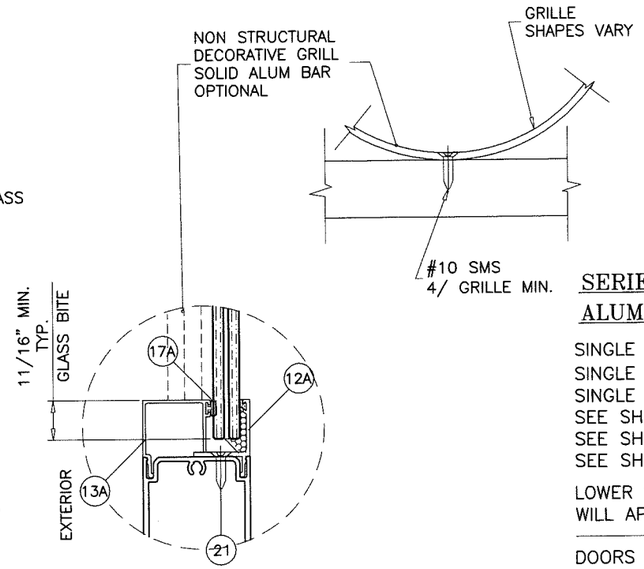

ALTERNATE GLAZING DETAIL

GLASS TYPES 'A' & 'B'

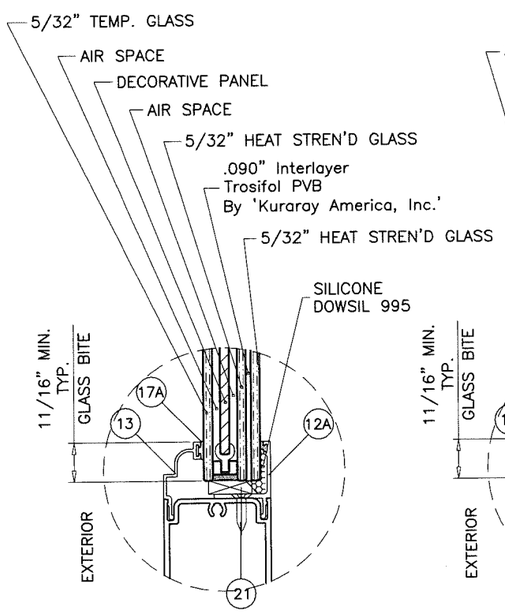

GLASS TYPE 'C'

1" OVERALL LAM. INSUL. GLASS

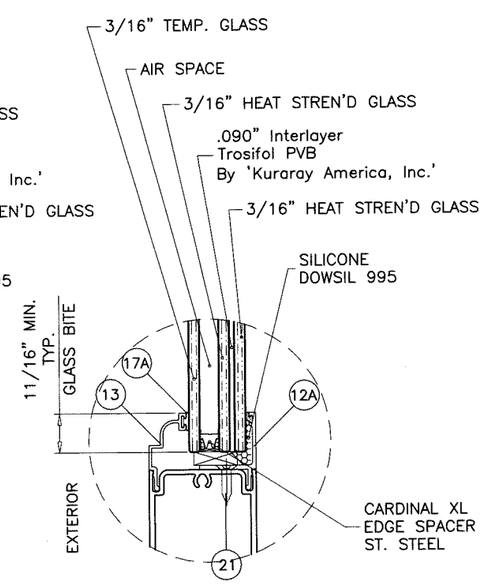

GLASS TYPE 'D'

1" OVERALL LAM. INSUL. GLASS

GLAZING OPTIONS

THESE DOORS ARE RATED FOR LARGE & SMALL MISSILE IMPACT.
SHUTTERS ARE NOT REQUIRED.

SERIES 500-9
ALUMINUM OUTSWING ENTRANCE DOOR

SINGLE (X) AND DOUBLE (XX) LEAF DOORS W/O TRANSOM SEE SHEETS 2 & 3.
SINGLE (O/X) AND DOUBLE (O/XX) LEAF DOORS WITH TRANSOMS SEE SHEET 4.
SINGLE AND DOUBLE LEAF DOORS WITH SIDELITES SEE SHEET 5.
SEE SHEET 2 FOR GLASS TYPES AND LOCKING OPTIONS.
SEE SHEET 3 FOR GLASS TYPE AND ADA SILL.
SEE SHEET 4.1 FOR SINGLE SIDELITE AND GLASS TYPES.

LOWER VALUES FROM TRANSOM/SIDELITE CAPACITY CHART OR DOOR CAPACITY WILL APPLY TO ENTIRE SYSTEM.

DOORS WITH STD. SILL APPROVED FOR INSTALLATIONS WHERE WATER INFILTRATION RESISTANCE IS REQUIRED.
DOORS WITH ADA THRESHOLDS NOT APPROVED FOR INSTALLATIONS WHERE WATER INFILTRATION RESISTANCE IS REQUIRED.

THIS PRODUCT HAS BEEN DESIGNED AND TESTED TO COMPLY WITH THE REQUIREMENTS OF THE 2017 (6TH EDITION) FLORIDA BUILDING CODE INCLUDING HIGH VELOCITY HURRICANE ZONE (HVHZ).

1BY OR 2BY WOOD BUCKS & BUCK FASTENERS BY OTHERS, MUST BE DESIGNED AND INSTALLED ADEQUATELY TO TRANSFER APPLIED PRODUCT LOADS TO THE BUILDING STRUCTURE.

ANCHORS SHALL BE CORROSION RESISTANT, SPACED AS SHOWN ON DETAILS AND INSTALLED PER MANUF'S INSTRUCTIONS. SPECIFIED EMBEDMENT TO BASE MATERIAL SHALL BE BEYOND WALL DRESSING OR STUCCO.

A LOAD DURATION INCREASE IS USED IN DESIGN OF ANCHORS INTO WOOD ONLY.

ALL SHIMS TO BE HIGH IMPACT, NON-METALLIC AND NON-COMPRESSIBLE.

MATERIALS INCLUDING BUT NOT LIMITED TO STEEL/METAL SCREWS, THAT COME INTO CONTACT WITH OTHER DISSIMILAR MATERIALS SHALL MEET THE REQUIREMENTS OF THE 2017 FLORIDA BLDG. CODE & ADOPTED STANDARDS.

THIS PRODUCT APPROVAL IS GENERIC AND DOES NOT PROVIDE INFORMATION FOR A SITE SPECIFIC PROJECT, i.e. LIFE SAFETY OF THIS PRODUCT, ADEQUACY OF STRUCTURE RECEIVING THIS PRODUCT AND SEALING AROUND OPENING FOR WATER INFILTRATION RESISTANCE ETC.
CONDITIONS NOT SHOWN IN THIS DRAWING ARE TO BE ANALYZED SEPARATELY, AND TO BE REVIEWED BY BUILDING OFFICIAL.

PRODUCT REVIEWED
as complying with the Florida
Building Code
Acceptance No. 19-0131.14
Expiration Date MAY 22, 2023
Ishaq I. Chaudhry
Miami-Dade Product Control

JAWAD AHMAD
LICENSE
No. 70592
Jan 8,2019
STATE OF FLORIDA
PROFESSIONAL ENGINEER

AL-FAROOQ CORPORATION
ENGINEERS & PRODUCT DEVELOPMENT
9360 SUNSET DRIVE, SUITE 220
MIAMI, FLORIDA 33173 (C.A.N. 3538)
TEL. (305) 264-8100 FAX. (305) 262-6978

COMP-ANL\W13-68SIW

SERIES 500-9 ALUM OUTSWING ENTRANCE DOOR (L.M.I.)

SIW Solutions, LLC.
975 S. CONGRESS AVE. #102
DELRAY BEACH, FL. 33445
TEL. (561) 274-9392 FAX. (561) 274-9262

revisions:

no	date	by	description
C	07.29.15		REV. PER RER COMMENTS
D	10.06.15		REV. PER RER COMMENTS
E	11.07.17		UPDATED TO 2017 FBC
F	12.05.18		COMPANY NAME REV.

date: 12-30-13
scale: 1/2"=1'-0"
dr. by: TARIQ
chk. by:

drawing no.
W13-68

DOORS WITH STD. 3 POINT LOCKING HARDWARE

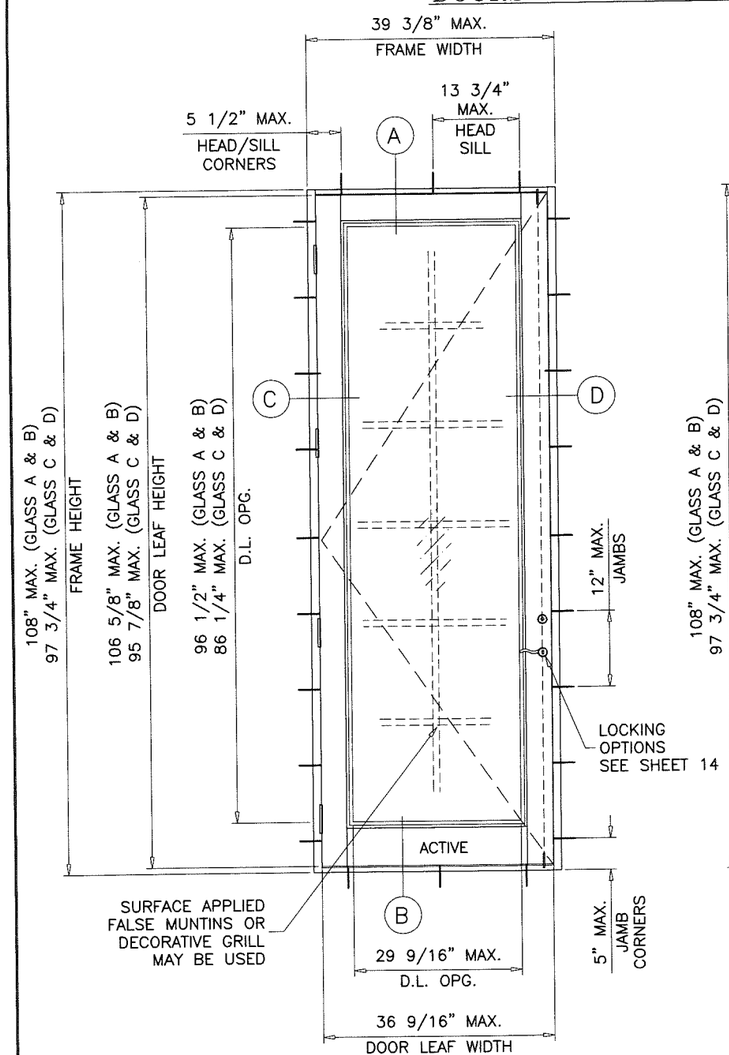

TYPICAL ELEVATION

(X)

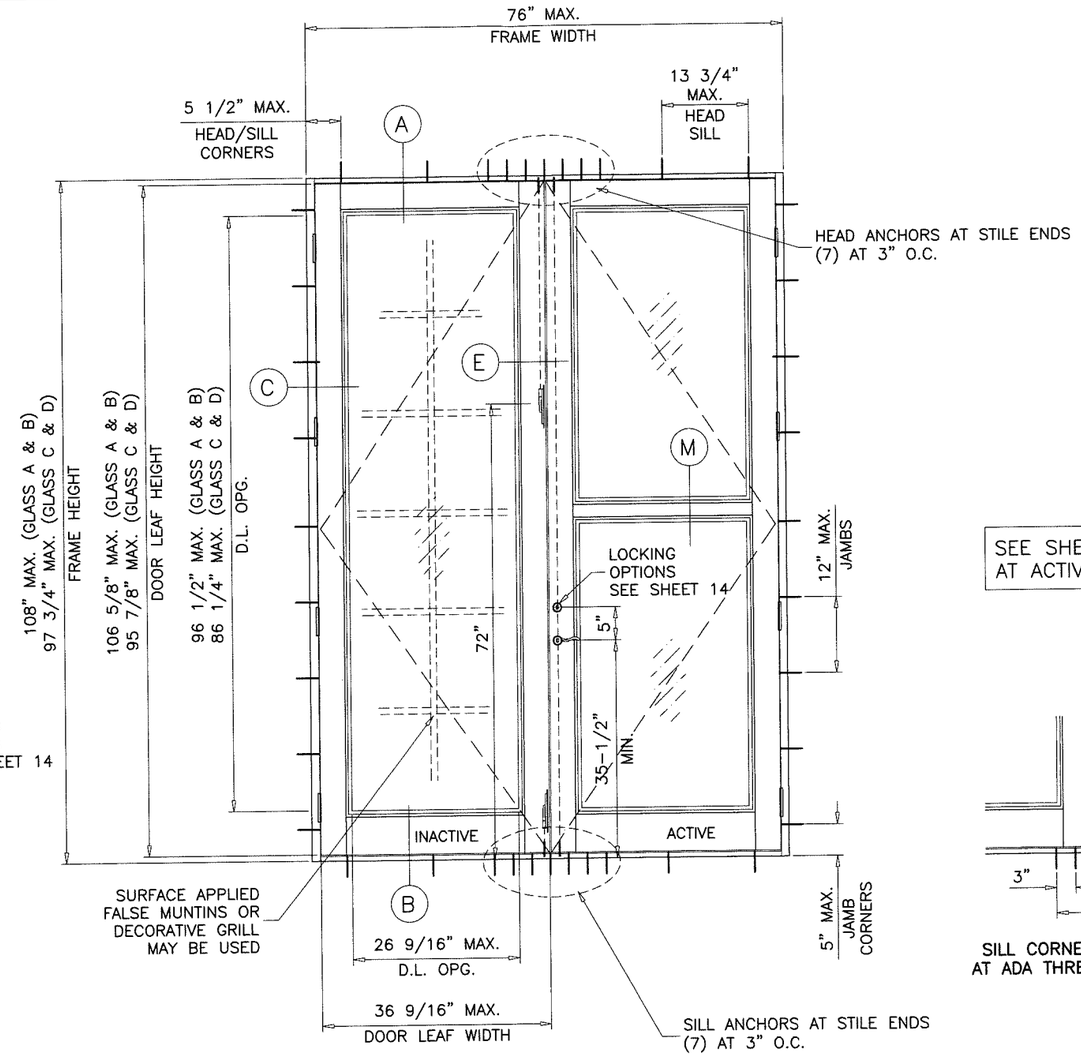

TYPICAL ELEVATION

(XX)

SEE SHEET 14 FOR LOCKING OPTIONS AT ACTIVE & INACTIVE LEAFS.

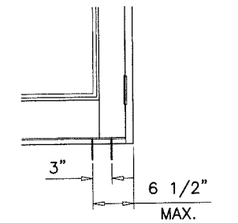

SILL CORNER ANCHORS AT ADA THRESHOLD ONLY

DOORS LOAD CAPACITY – PSF SINGLE (X) OR DOUBLE (XX) DOORS WITHOUT TRANSOM																
SINGLE DOOR (X) DIMS.		DOUBLE DOOR (XX) DIMS.		GLASS						LOCKS						HINGES
				TYPE 'A'		TYPE 'B'		TYPES 'C' & 'D'		TYPES 1, 3		TYPE 4		TYPE 5		QUANTITY PER LEAF
FRAME WIDTH	FRAME HEIGHT	FRAME WIDTH	FRAME HEIGHT	EXT.(+)	INT.(–)	EXT.(+)	INT.(–)	EXT.(+)	INT.(–)	EXT.(+)	INT.(–)	EXT.(+)	INT.(–)	EXT.(+)	INT.(–)	
39-3/8"	80"	76"	80"	70.0	70.0	80.0	80.0	60.0	60.0	80.0	80.0	60.0	60.0	62.0	62.0	3
39-3/8"	97-3/4"	76"	97-3/4"	70.0	70.0	80.0	80.0	60.0	60.0	80.0	80.0	60.0	60.0	62.0	62.0	4
39-3/8"	108"	76"	108"	70.0	70.0	80.0	80.0	–	–	80.0	80.0	–	–	–	–	4

EXT.(+) DESIGN LOAD IS BASED ON STD. SILL
SEE SHEET 1 FOR GLASS TYPES DESCRIPTION.
SEE SHEET 14 FOR LOCKS AND HINGES DESCRIPTION.

GLASS D.L.O. FORMULAE:
D.L.O. WIDTH = FRAME WIDTH – 9.813" (X DOORS)
= (FRAME WIDTH – 22.875")/2 (XX DOORS)
* D.L.O. HEIGHT = FRAME HEIGHT – 11.5" (4" BOTTOM RAIL)
= FRAME HEIGHT – 13.5" (6" BOTTOM RAIL)
= FRAME HEIGHT – 15.5" (8" BOTTOM RAIL)
* USING #20305 (1/2" HT.) THRESHOLD

NOTE:
GLASS CAPACITIES ON THIS SHEET ARE BASED ON ASTM E1300–09 (3 SEC. GUSTS) AND FLORIDA BUILDING COMMISSION DECLARATORY STATEMENT DCA05–DEC–219

PRODUCT REVIEWED as complying with the Florida Building Code
Acceptance No. 19-0131.14
Expiration Date 5/22/23
By Ishwar I. Chand
Product Control

JAVAD AHMAD
LICENSE
No. 70592
Jan 8, 2019
STATE OF FLORIDA
PROFESSIONAL ENGINEER

AL-FAROOQ CORPORATION
ENGINEERS & PRODUCT DEVELOPMENT
9360 SUNSET DRIVE, SUITE 220
MIAMI, FLORIDA 33173 (C.A.N. 3538)
TEL. (305) 264-8100 FAX. (305) 262-6978
COMP–ANL\W13–68SIW

SERIES 500–9 ALUM OUTSWING ENTRANCE DOOR (L.M.I.)

SIW Solutions, LLC.
975 S. CONGRESS AVE. #102
DELRAY BEACH, FL. 33445
TEL. (561) 274–9392 FAX. (561) 274–9262

revisions:

no	date	by	description
C	07.29.15		NO CHANGE THIS SHEET
D	10.06.15		REV. PER RER COMMENTS
E	11.07.17		UPDATED TO 2017 FBC
F	12.05.18		COMPANY NAME REV.

date: 12–30–13
scale: 1/2"=1'–0"
dr. by: TARIQ
chk. by:

drawing no.
W13–68

DOORS WITH SURFACE APPLIED PANIC HARDWARE

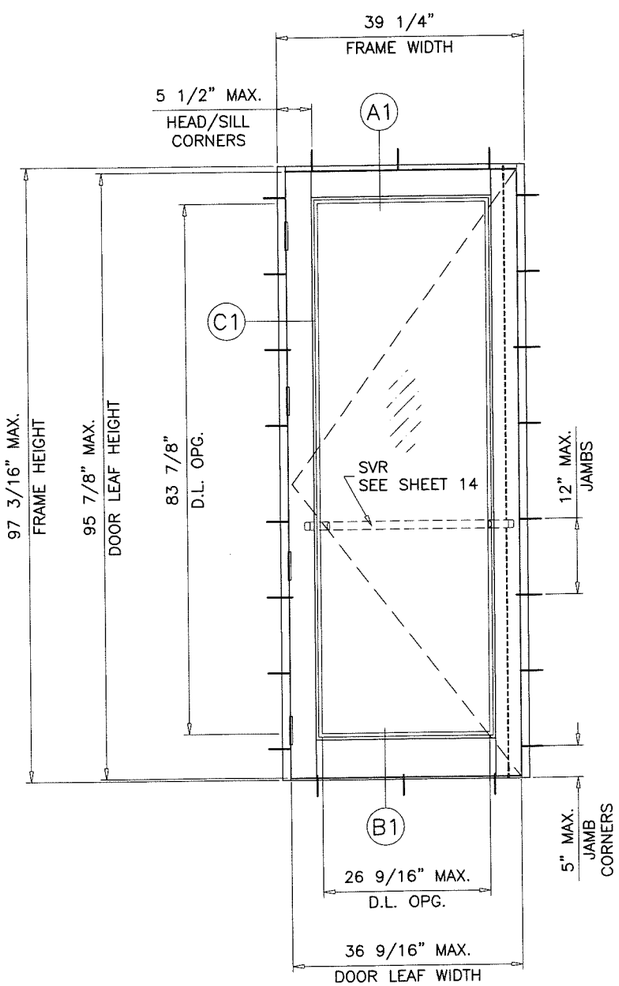

TYPICAL ELEVATION

(X)

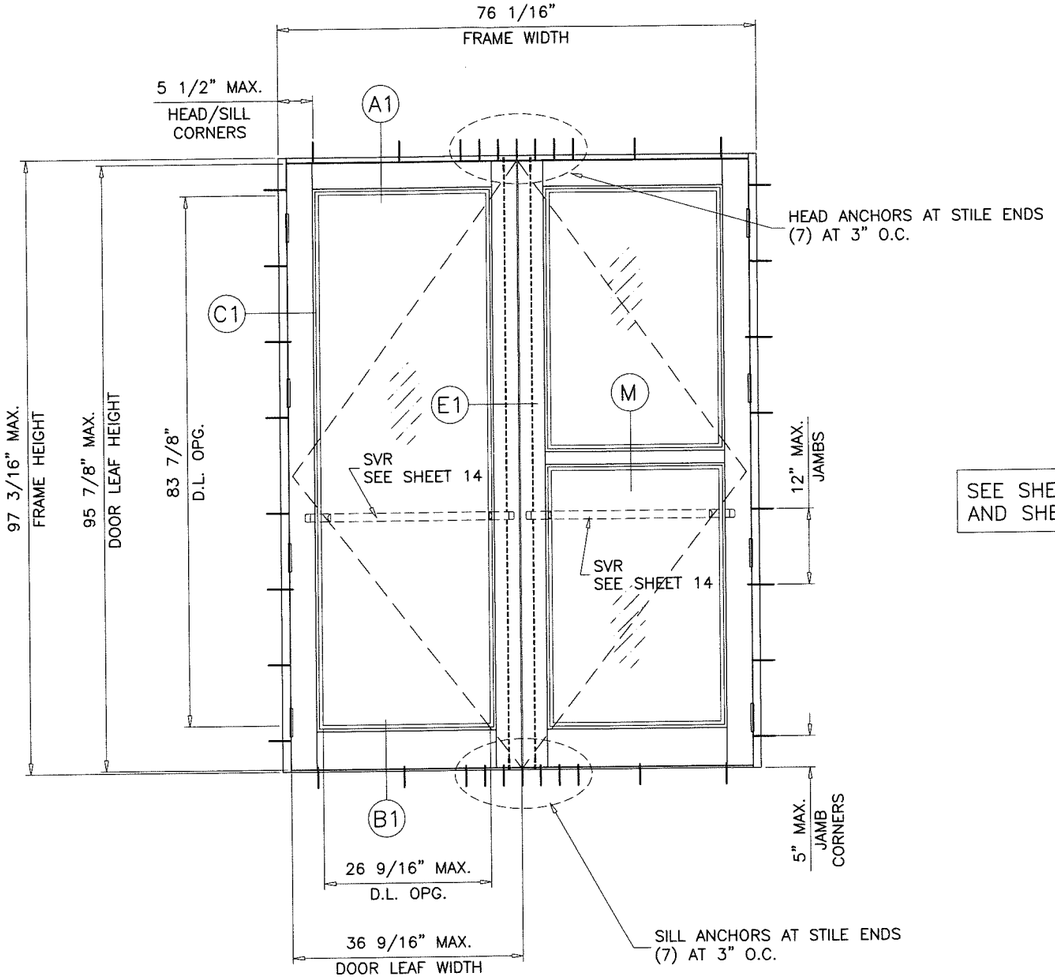

TYPICAL ELEVATION

(XX)

SEE SHEET 14 FOR LOCK DESCRIPTION AND SHEET 9 FOR DETAIL.

DOOR OPTIONS

DOORS LOAD CAPACITY - PSF SINGLE DOORS (X)			
DOOR DIMS.		GLASS TYPE 'B' ADA THRESHOLD	
FRAME WIDTH	FRAME HEIGHT	EXT.(+)	INT.(−)
39-1/4"	97-3/16"	62.0	62.0

DOORS LOAD CAPACITY - PSF DOUBLE DOORS (XX)			
DOOR DIMS.		GLASS TYPE 'B' ADA THRESHOLD	
FRAME WIDTH	FRAME HEIGHT	EXT.(+)	INT.(−)
76-1/16"	97-3/16"	62.0	62.0

NOTE:
VERIFY COMPLIANCE WITH EGRESS LIMITATIONS WHERE REQUIRED.

DOOR D.L.O. DIMS.

D.L.O. HEIGHT = FRAME HEIGHT − 13.313" (6" BOTTOM RAIL)
D.L.O. WIDTH (X DOORS) = FRAME WIDTH − 12.625"
D.L.O. WIDTH (XX DOORS) = (FRAME WIDTH − 22.875)/2

PRODUCT REVIEWED
as complying with the Florida
Building Code
Acceptance No. 19-0131.14
Expiration Date 5/22/23
Miami-Dade Product Control

JAWAD AHMAD
LICENSE
No. 70592
Jan 8,2019
STATE OF FLORIDA
PROFESSIONAL ENGINEER

AL-FAROOQ CORPORATION
ENGINEERS & PRODUCT DEVELOPMENT
9360 SUNSET DRIVE, SUITE 220
MIAMI, FLORIDA 33173 (C.A.N. 3538)
TEL. (305) 264-8100 FAX. (305) 262-6978
COMP-ANL\W13-68SIW

SERIES 500-9 ALUM OUTSWING ENTRANCE DOOR (L.M.I.)

SIW Solutions, LLC.
975 S. CONGRESS AVE. #102
DELRAY BEACH, FL. 33445
TEL. (561) 274-9262 FAX. (561) 274-9392

revisions:

no	date	by	description
C	07.29.15		NO CHANGE THIS SHEET
D	10.06.15		REV. PER RER COMMENTS
E	11.07.17		UPDATED TO 2017 FBC
F	12.05.18		COMPANY NAME REV.

date: 12-30-13
scale: 1/2"=1'-0"
dr. by: TARIQ
chk. by:

drawing no.
W13-68

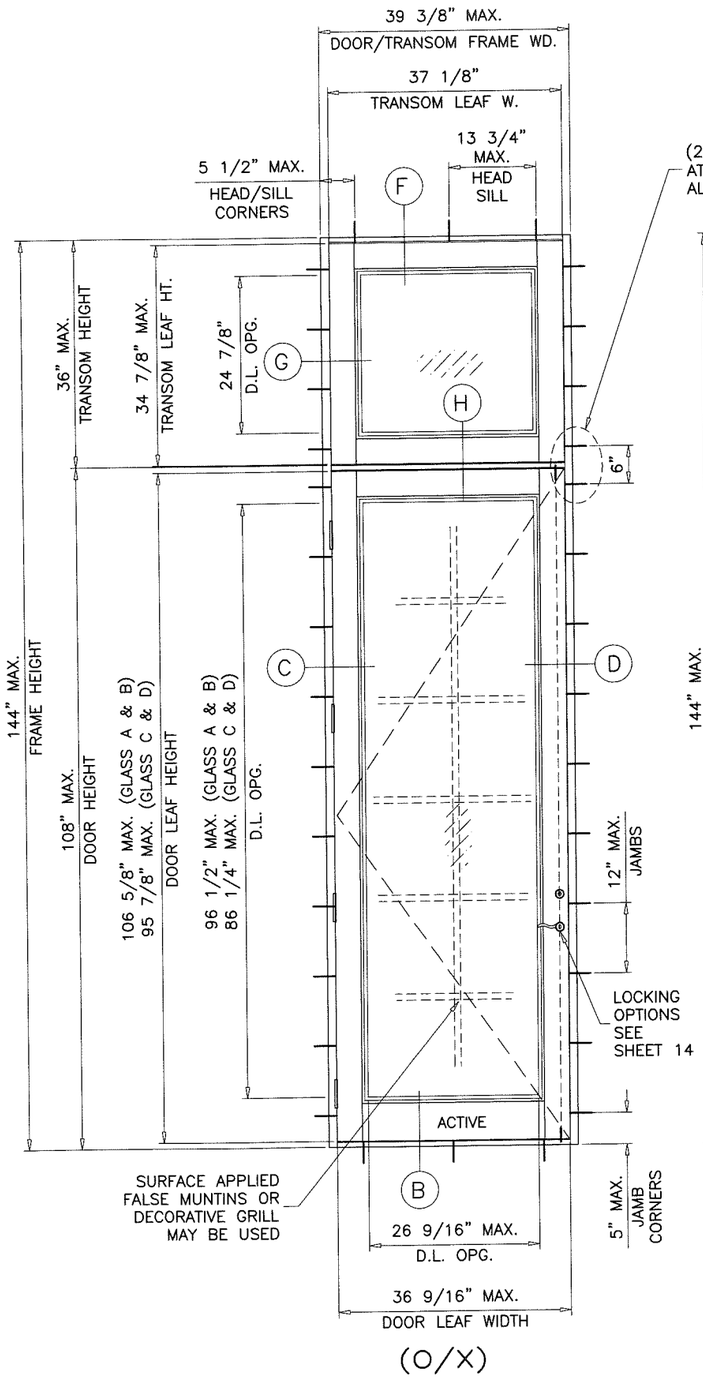

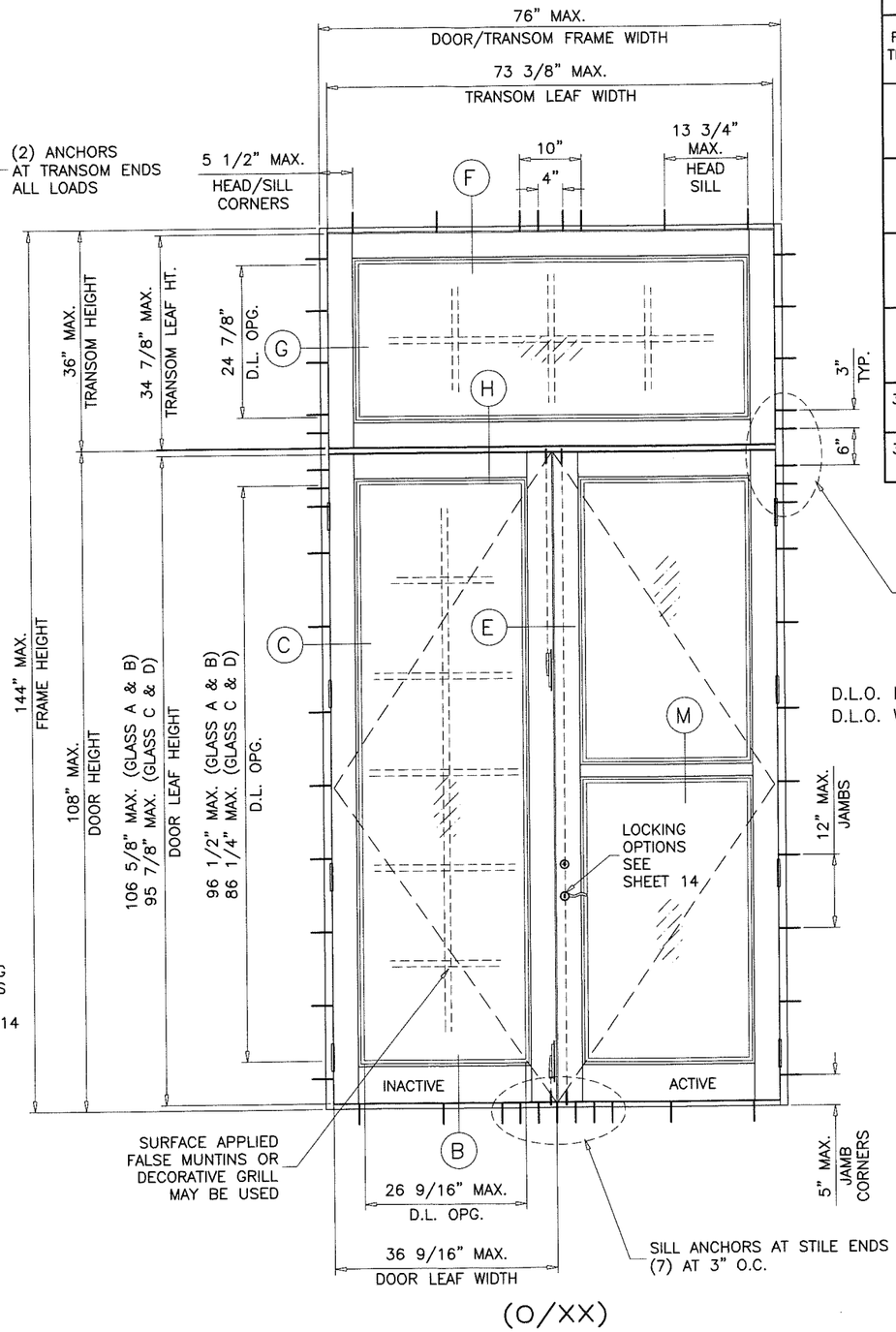

SINGLE OR DOUBLE DOORS WITH TRANSOM CAPACITY – PSF								
FRAME/ TRANSOM WIDTH	DOOR HEIGHT	TRANSOM HEIGHT	GLASS TYPE 'A'		GLASS TYPE 'B'		GLASS TYPE 'C' & 'D'	
			EXT.(+)	INT.(–)	EXT.(+)	INT.(–)	EXT.(+)	INT.(–)
72" (XX)	96"	24"	68.4	68.4	68.4	68.4	60.0	60.0
		30"	65.1	65.1	65.1	65.1	60.0	60.0
		36"	62.2	62.2	62.2	62.2	60.0	60.0
76" (XX)		24"	61.0	61.0	61.0	61.0	60.0	60.0
		30"	58.1	58.1	58.1	58.1	58.1	58.1
		36"	55.4	55.4	55.4	55.4	55.4	55.4
72" (XX)	108"	24"	62.2	62.2	62.2	62.2	–	–
		30"	59.5	59.5	59.5	59.5	–	–
		36"	57.0	57.0	57.0	57.0	–	–
76" (XX)		24"	55.4	55.4	55.4	55.4	–	–
		30"	53.0	53.0	53.0	53.0	–	–
		36"	50.8	50.8	50.8	50.8	–	–
39 3/8" (X)	96"	36"	70.0	70.0	80.0	80.0	60.0	60.0
39 3/8" (X)	108"	36"	70.0	70.0	80.0	80.0	–	–

EXT.(+) DESIGN LOAD IS BASED ON STD. SILL
FOR LOCKS AND HINGES LIMITATIONS SEE SHEETS 2 & 14.

D.L.O. HEIGHT (TRANSOM) = TRANSOM LEAF HEIGHT – 10"
D.L.O. WIDTH (TRANSOM) = TRANSOM LEAF WIDTH – 10"

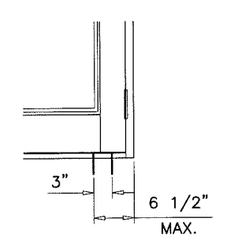

SILL CORNER ANCHORS AT ADA THRESHOLD ONLY

PRODUCT REVIEWED
as complying with the Florida Building Code
Acceptance No. 19-0131.14
Expiration Date 5/22/23
Miami-Dade Product Control

JAVAD AHMAD
LICENSE
No. 70592
Jan 8,2019
STATE OF FLORIDA
PROFESSIONAL ENGINEER

AL-FAROOQ CORPORATION
ENGINEERS & PRODUCT DEVELOPMENT
9360 SUNSET DRIVE, SUITE 220
MIAMI, FLORIDA 33173 (C.A.N. 3538)
TEL. (305) 264-8100 FAX. (305) 262-6978
COMP-ANL\W13-68SIW

SERIES 500-9 ALUM OUTSWING ENTRANCE DOOR (L.M.I.)

SIW Solutions, LLC.
975 S. CONGRESS AVE. #102
DELRAY BEACH, FL. 33445
TEL. (561) 274-9392 FAX. (561) 274-9262

revisions:

no	date	by	description
C	07.29.15		NO CHANGE THIS SHEET
D	10.06.15		REV. PER RER COMMENTS
E	11.07.17		UPDATED TO 2017 FBC
F	12.05.18		COMPANY NAME REV.

date: 12-30-13
scale: 1/2"=1'-0"
dr. by: TARIQ
chk. by:

drawing no.
W13-68

SINGLE (STATIONARY) SIDELITE UNIT

(SEE DETAIL IN SHEET 11)

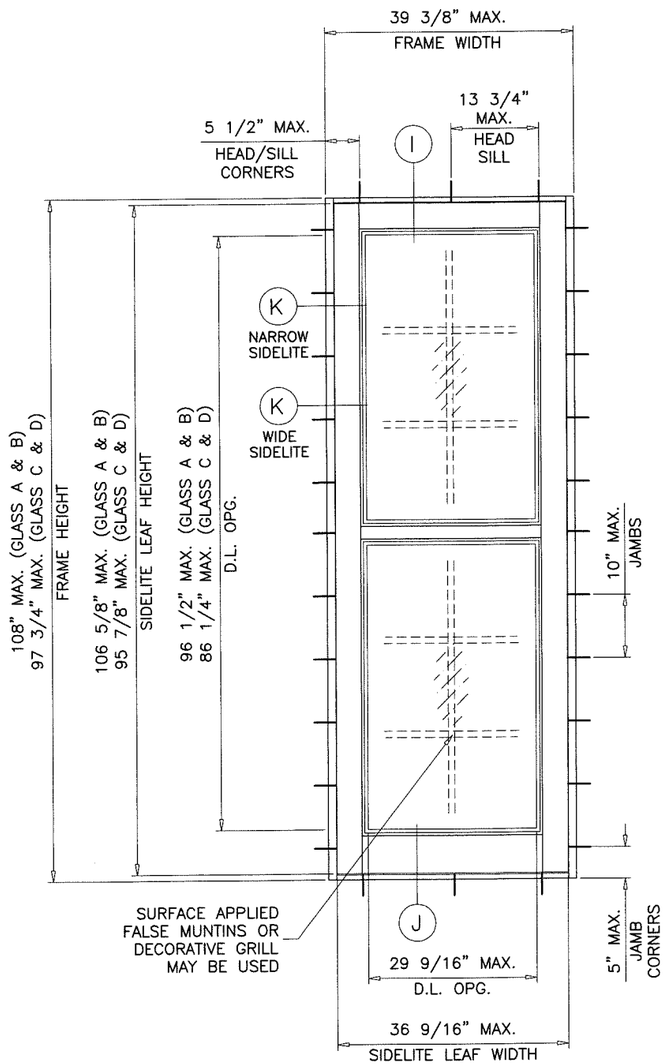

TYPICAL ELEVATION

(O)

SIDELITE LOAD CAPACITY – PSF STAND ALONE STATIONARY PANEL (O)							
SIDELITE DIMS.		GLASS TYPE 'A'		GLASS TYPE 'B'		GLASS TYPES 'C' & 'D'	
FRAME WIDTH	FRAME HEIGHT	EXT.(+)	INT.(–)	EXT.(+)	INT.(–)	EXT.(+)	INT.(–)
39–3/8"	97–3/4"	70.0	70.0	80.0	80.0	60.0	60.0
39–3/8"	108"	70.0	70.0	80.0	80.0	–	–

PRODUCT REVISED
as complying with the Florida
Building Code
Acceptance No 19-0131.14
Expiration Date 5/22/23
By Ishaq I. Chande
Director, State Product Control

JAMAD AHMAD
LICENSE
No. 70592
Jan 8,2019
STATE OF FLORIDA
PROFESSIONAL ENGINEER

AL-FAROOQ CORPORATION
ENGINEERS & PRODUCT DEVELOPMENT
9360 SUNSET DRIVE, SUITE 220
MIAMI, FLORIDA 33173 (C.A.N. 3538)
TEL. (305) 264-8100 FAX. (305) 262-6978

COMP–ANL\W13–68SIW

SERIES 500–9 ALUM OUTSWING ENTRANCE DOOR (L.M.I.)

SIW Solutions, LLC.
975 S. CONGRESS AVE. #102
DELRAY BEACH, FL. 33445
TEL. (561) 274–9392 FAX. (561) 274–9262

revisions:

no	date	by	description
C	07.29.15		NO CHANGE THIS SHEET
D	10.06.15		REV. PER RER COMMENTS
E	11.07.17		UPDATED TO 2017 FBC
F	12.05.18		COMPANY NAME REV.

date: 12–30–13
scale: 1/2"=1'–0"
dr. by: TARIQ
chk. by:

drawing no.
W13–68

DESIGN LOAD CAPACITY – PSF
SIDELITES WITH SINGLE OR DOUBLE LEAF DOORS

SIDELITE WIDTH INCHES	DOOR FRAME HEIGHT INCHES	GLASS TYPE 'A' (SEE NOTE BELOW) GLASS TYPE 'B'						GLASS TYPES 'C' & 'D'	
		NARROW STILE SIDELITE W/O REINF.		NARROW STILE SIDELITE WITH REINF.		WIDE STILE SIDELITE W/O REINF.		NARROW STILE WIDE STILE SIDELITE W/O REINF.	
		EXT.(+)	INT.(–)	EXT.(+)	INT.(–)	EXT.(+)	INT.(–)	EXT.(+)	INT.(–)
30	80	80.0	80.0	80.0	80.0	80.0	80.0	60.0	60.0
36		80.0	80.0	80.0	80.0	80.0	80.0	60.0	60.0
42		80.0	80.0	80.0	80.0	80.0	80.0	60.0	60.0
46–7/8		80.0	80.0	80.0	80.0	80.0	80.0	–	–
48		80.0	80.0	80.0	80.0	80.0	80.0	–	–
52		73.8	73.8	73.8	73.8	73.8	73.8	–	–
54		71.1	71.1	71.1	71.1	71.1	71.1	–	–
56		68.6	68.6	68.6	68.6	68.6	68.6	–	–
60		64.0	64.0	64.0	64.0	64.0	64.0	–	–
30	84	80.0	80.0	80.0	80.0	80.0	80.0	60.0	60.0
36		80.0	80.0	80.0	80.0	80.0	80.0	60.0	60.0
42		80.0	80.0	80.0	80.0	80.0	80.0	60.0	60.0
46–7/8		80.0	80.0	80.0	80.0	80.0	80.0	–	–
48		80.0	80.0	80.0	80.0	80.0	80.0	–	–
52		73.8	73.8	73.8	73.8	73.8	73.8	–	–
54		71.1	71.1	71.1	71.1	71.1	71.1	–	–
56		68.6	68.6	68.6	68.6	68.6	68.6	–	–
60		64.0	64.0	64.0	64.0	64.0	64.0	–	–
30	90	80.0	80.0	80.0	80.0	80.0	80.0	60.0	60.0
36		80.0	80.0	80.0	80.0	80.0	80.0	60.0	60.0
42		80.0	80.0	80.0	80.0	80.0	80.0	–	–
46–7/8		80.0	80.0	80.0	80.0	80.0	80.0	–	–
48		80.0	80.0	80.0	80.0	80.0	80.0	–	–
52		73.8	73.8	73.8	73.8	73.8	73.8	–	–
54		71.1	71.1	71.1	71.1	71.1	71.1	–	–
56		68.6	68.6	68.6	68.6	68.6	68.6	–	–
30	96	80.0	80.0	80.0	80.0	80.0	80.0	60.0	60.0
36		80.0	80.0	80.0	80.0	80.0	80.0	60.0	60.0
42		80.0	80.0	80.0	80.0	80.0	80.0	–	–
46–7/8		76.0	76.0	76.0	76.0	76.0	76.0	–	–
48		75.1	75.1	75.1	75.1	75.1	75.1	–	–
52		71.8	71.8	71.8	71.8	71.8	71.8	–	–
54		70.2	70.2	70.2	70.2	70.2	70.2	–	–
30	97–3/4	80.0	80.0	80.0	80.0	80.0	80.0	60.0	60.0
36		80.0	80.0	80.0	80.0	80.0	80.0	60.0	60.0
42		79.1	79.1	79.1	79.1	79.1	79.1	–	–
46–7/8		74.7	74.7	74.7	74.7	74.7	74.7	–	–
48		73.7	73.7	73.7	73.7	73.7	73.7	–	–
52		70.5	70.5	70.5	70.5	70.5	70.5	–	–
30	102"	80.0	80.0	80.0	80.0	80.0	80.0	–	–
36		80.0	80.0	80.0	80.0	80.0	80.0	–	–
42		75.8	75.8	75.8	75.8	75.8	75.8	–	–
46–7/8		71.6	71.6	71.6	71.6	71.6	71.6	–	–
48		70.6	70.6	70.6	70.6	70.6	70.6	–	–
30	108"	79.7	79.7	80.0	80.0	80.0	80.0	–	–
36		73.2	73.2	77.3	77.3	77.3	77.3	–	–
42		67.7	67.7	71.6	71.6	71.6	71.6	–	–
46–7/8		63.7	63.7	67.6	67.6	67.6	67.6	–	–
48		62.9	62.9	66.7	66.7	66.7	66.7	–	–

FOR GLASS TYPE 'A' LIMIT MAX. DESIGN LOADS TO ±70.0 PSF
EXT.(+) DESIGN LOAD IS BASED ON STD. SILL

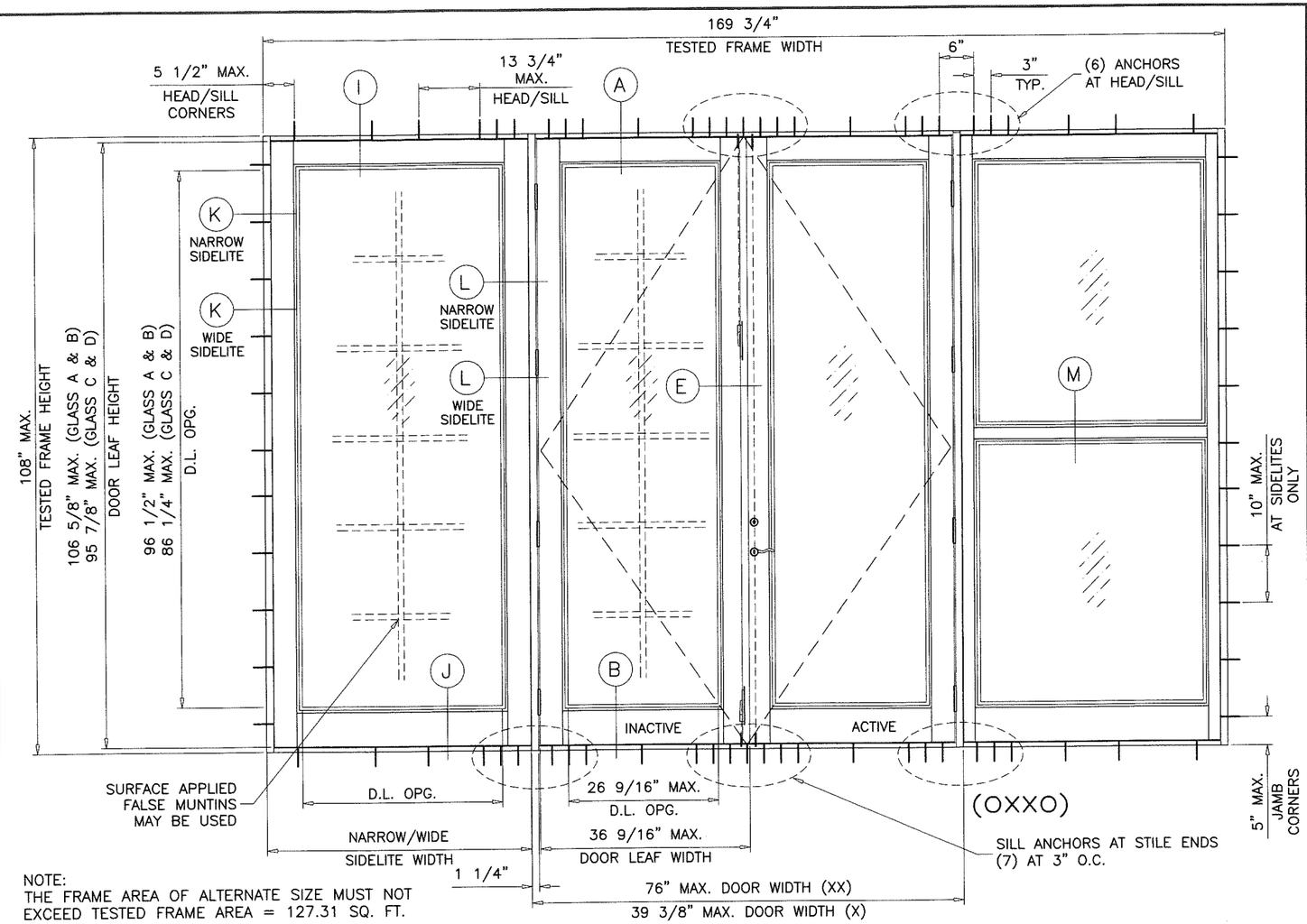

NOTE:
THE FRAME AREA OF ALTERNATE SIZE MUST NOT EXCEED TESTED FRAME AREA = 127.31 SQ. FT.

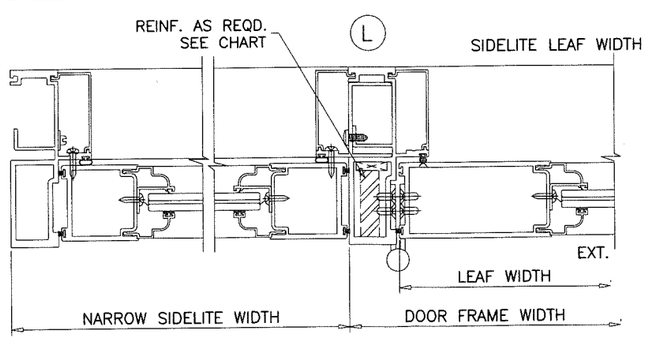

NARROW STILE SIDELITE WITH DOOR (W/WO REINFORCEMENT)

SIDELITE LEAF WIDTH = SIDELITE WIDTH – 1 3/8"

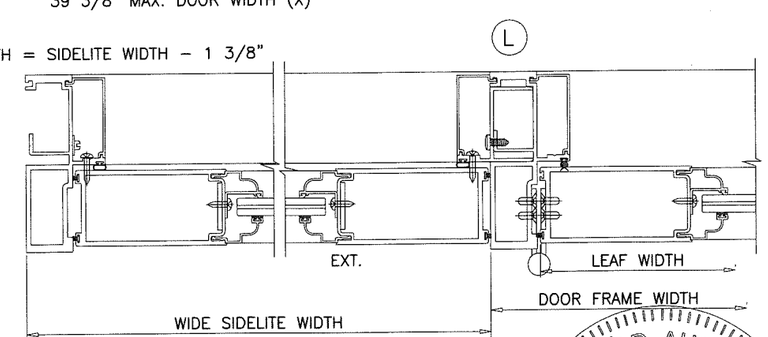

WIDE STILE SIDELITE WITH DOOR

INSTRUCTIONS: USE CHARTS AS FOLLOWS.

1. SELECT SINGLE OR DOUBLE DOORS CAPACITY, GLASS TYPES AND LOCKING OPTIONS FROM TABLES ON SHEETS 2 & 3.
2. SELECT LOWER OF SIDELITE TO DOOR MULLION CAPACITY FROM TABLE ABOVE.
3. LOWER VALUES FROM STEPS 1 OR 2 WILL APPLY TO ENTIRE SYSTEM.

PRODUCT REVIEWED as complying with the Florida Building Code
Acceptance No. 19-0131.14
Expiration Date 5/22/23
Miami-Dade Product Control

TARIQ AHMAD LICENSE No. 70592 STATE OF FLORIDA PROFESSIONAL ENGINEER
Jan 8, 2019

AL-FAROOQ CORPORATION
ENGINEERS & PRODUCT DEVELOPMENT
9360 SUNSET DRIVE, SUITE 220
MIAMI, FLORIDA 33173 (C.A.N. 3538)
TEL. (305) 264-8100 FAX. (305) 262-6978

COMP–ANL\W13–68SIW

SERIES 500–9 ALUM OUTSWING ENTRANCE DOOR (L.M.I.)

SIW Solutions, LLC.
975 S. CONGRESS AVE. #102
DELRAY BEACH, FL. 33445
TEL. (561) 274–9392 FAX. (561) 274–9262

revisions:

no	date	by	description
C	07.29.15		NO CHANGE THIS SHEET
D	10.06.15		REV. PER RER COMMENTS
E	11.07.17		UPDATED TO 2017 FBC
F	12.05.18		COMPANY NAME REV.

date: 12–30–13
scale: 1/2"=1'–0"
dr. by: TARIQ
chk. by:

drawing no. W13–68

sheet 5 of 16

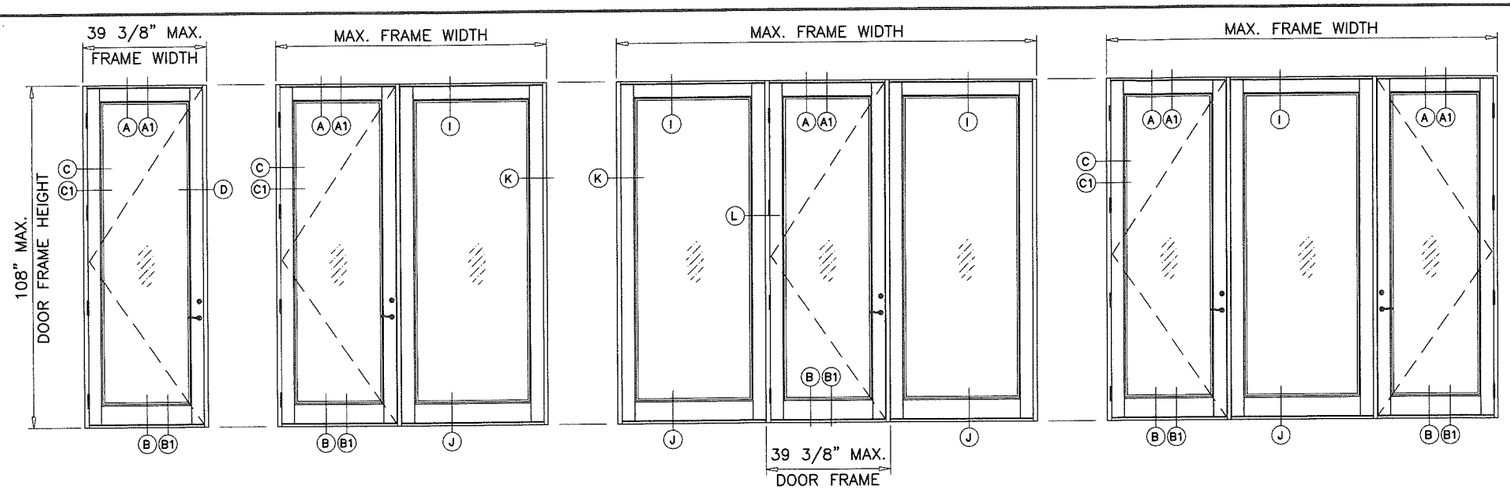

SINGLE LEAF DOORS WITHOUT SIDELITES.
SINGLE LEAF DOORS WITH SINGLE SIDELITE AT EITHER SIDE OF DOOR.

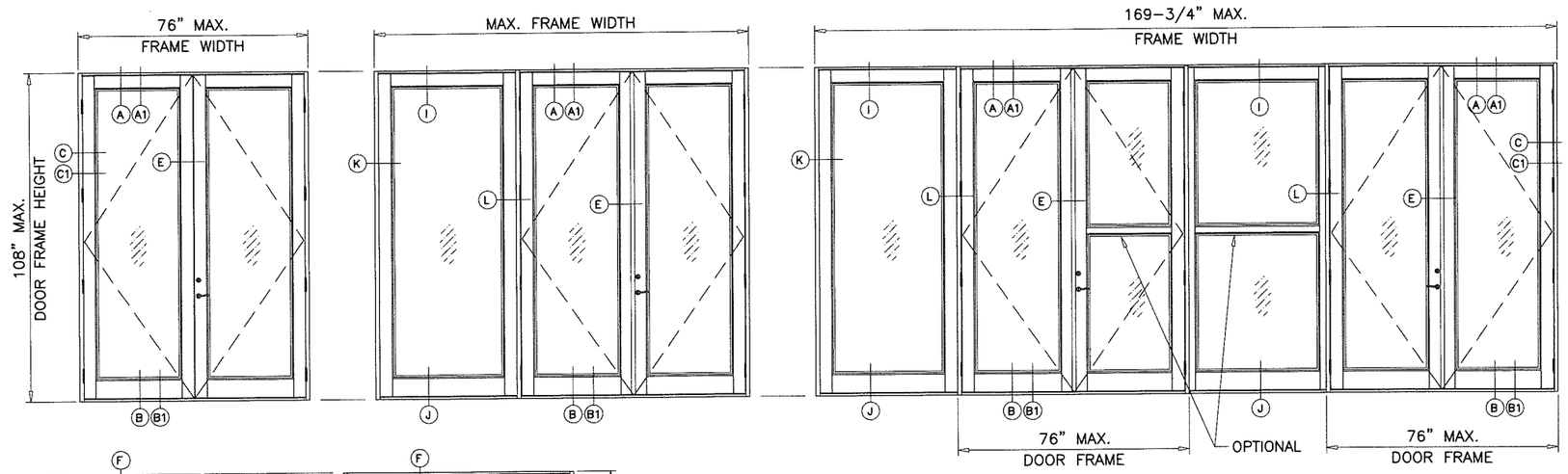

DOUBLE LEAF DOORS WITHOUT SIDELITES.
DOUBLE LEAF DOORS WITH SINGLE SIDELITE AT EITHER SIDE OF DOOR.

PRODUCT REVIEWED
as complying with the Florida
building Code
Acceptance No 19-0131.14
Expiration Date 5/22/23
Mr. Shaq I. Chand
Miami Dade Product Control

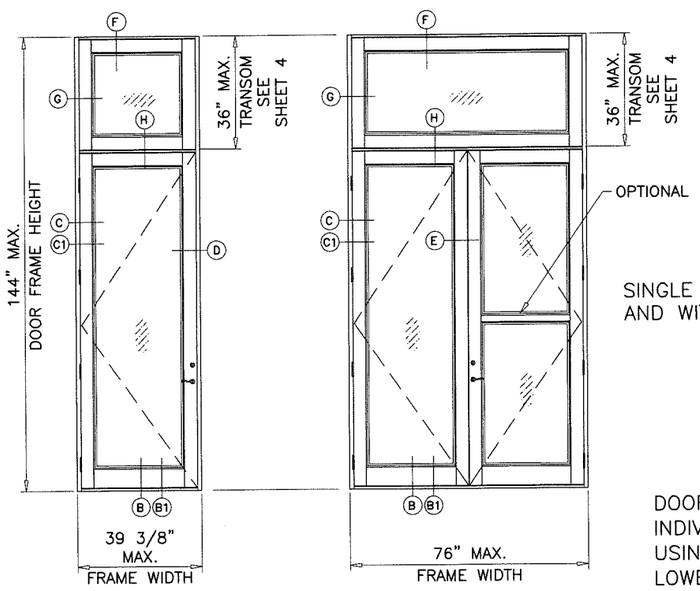

SINGLE AND DOUBLE LEAF DOORS WITH TRANSOMS AND WITHOUT SIDELITES

NOTE:
THE FRAME AREA OF ALTERNATE SIZE MUST NOT EXCEED TESTED FRAME AREA = 127.31 SQ. FT.

SEE SHEETS 2 AND 3 FOR MAXIMUM DOOR WIDTHS AND HEIGHTS
SEE SHEET 5 FOR SIDELITE WIDTHS

D.L.O. HEIGHT (SIDELITE) = LEAF HEIGHT – 12" (4" TOP RAIL, 6" BOT. RAIL)
D.L.O. WIDTH (SIDE LITE) = LEAF WIDTH – 10" (WIDE STILES)
D.L.O. WIDTH (SIDE LITE) = LEAF WIDTH – 6" (NARROW STILES)

APPROVED CONFIGURATIONS

DOORS, SIDELITES AND TRANSOM COMBINATIONS SHOWN ABOVE CAN BE USED AS INDIVIDUAL UNITS AS SHOWN OR IN COMBINATIONS WITH OTHER APPROVED PRODUCTS USING MIAMI–DADE COUNTY APPROVED MULLION IN BETWEEN.
LOWER VALUES FROM DOOR, SIDELITE, MULLIONS OR APPROVED PRODUCTS USED WILL APPLY TO ENTIRE SYSTEM.
TO BE APPROVED BY AJH (AUTHORITY HAVING JURISDICTION).

JAVAD AHMAD
LICENSE
No. 70592
Jan 8, 2019
STATE OF FLORIDA
PROFESSIONAL ENGINEER

AL-FAROOQ CORPORATION
ENGINEERS & PRODUCT DEVELOPMENT
9360 SUNSET DRIVE, SUITE 220
MIAMI, FLORIDA 33173 (C.A.N. 3538)
TEL. (305) 264-8100 FAX. (305) 262-6978
COMP-ANL\W13-68SIW

SERIES 500-9 ALUM OUTSWING ENTRANCE DOOR (L.M.I.)

SIW Solutions, LLC.
975 S. CONGRESS AVE. #102
DELRAY BEACH, FL. 33445
TEL. (561) 274-9392 FAX. (561) 274-9262

revisions:

no	date	by	description
C	07.29.15		NO CHANGE THIS SHEET
D	10.06.15		REV. PER RER COMMENTS
E	11.07.17		UPDATED TO 2017 FBC
F	12.05.18		COMPANY NAME REV.

date: 12-30-13
scale: –
dr. by: TARIQ
chk. by:

drawing no.
W13-68

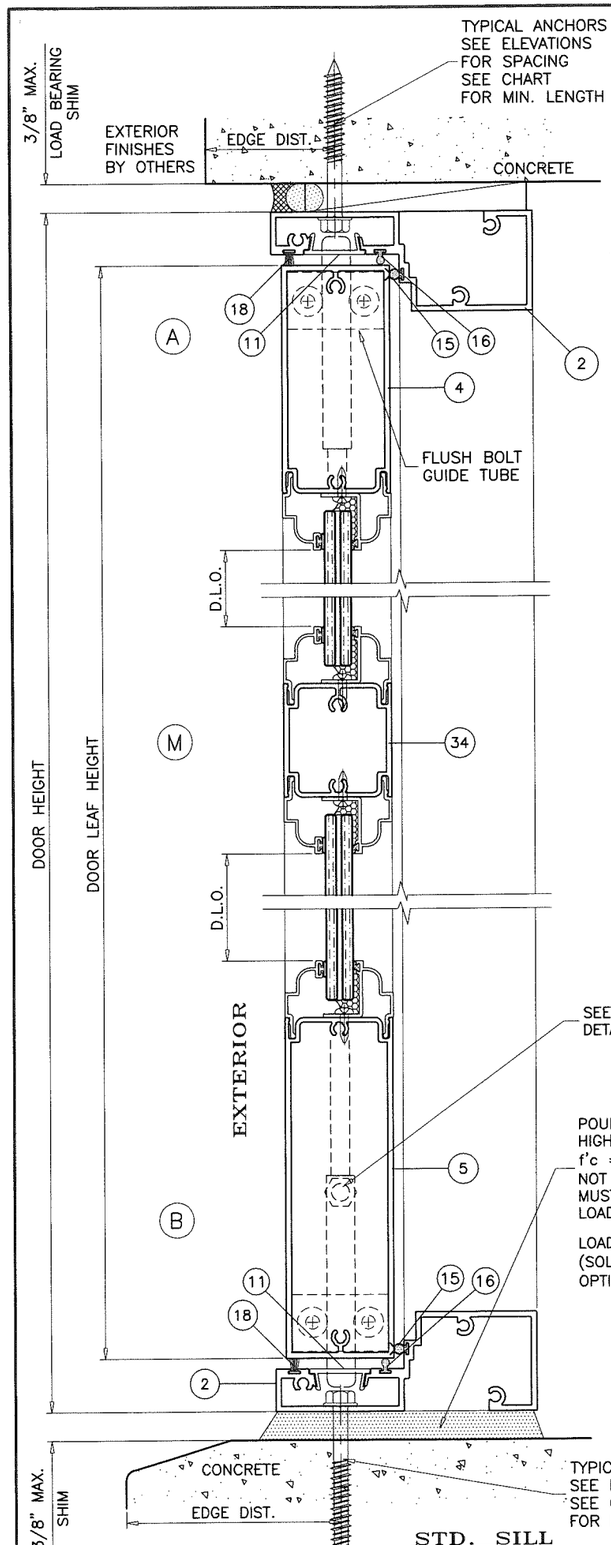

STD. SILL
OPERABLE UNITS
(APPROVED FOR WATER RESISTANCE)

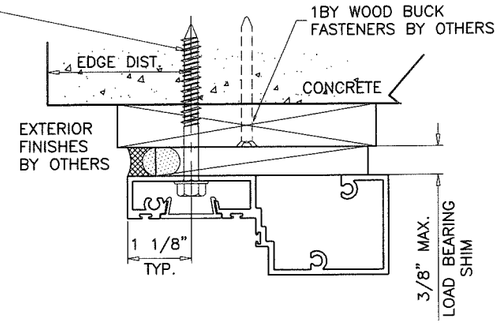

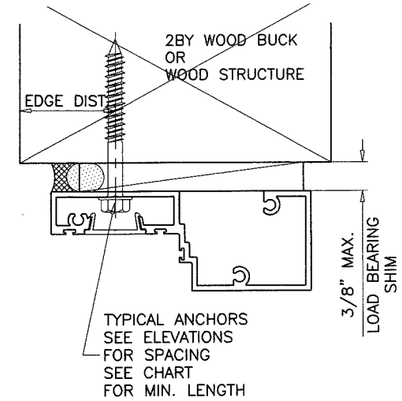

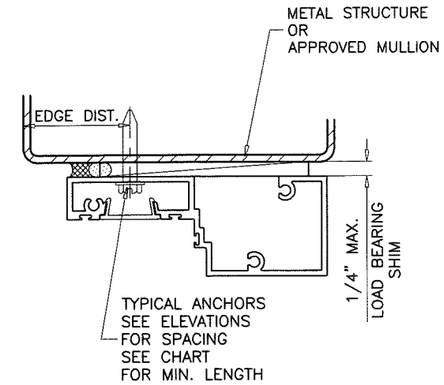

TYPICAL ANCHORS: SEE ELEV. FOR SPACING

ANCHORS TYPE	SUBSTRATE	AT HEAD		AT SILL		AT JAMBS	
		MIN. LENGTH	MIN. EDGE DIST.	MIN. LENGTH	MIN. EDGE DIST.	MIN. LENGTH	MIN. EDGE DIST.
1/4" DIA. ULTRACONS BY 'ELCO' (Fu=177 KSI, Fy=155 KSI)	WOOD	2-3/4"	1"	N.A.	N.A.	3-3/4"	1"
	MASONRY	N.A.	N.A.	N.A.	N.A.	3-3/4"	2-1/2"
	CONCRETE	2-3/4"	2-1/2"	2-3/4"	2-1/2"	3-3/4"	2-1/2"
1/4" DIA. SELF DRILLING SCREWS (GRADE 5 CRS)	METAL	3/4"	3/4"	N.A.	N.A.	3/4"	3/4"

WOOD = 2BY WOOD BUCKS OR WOOD STRUCTURE S.G. = 0.55 MIN.
MASONRY = C-90 HOLLOW/FILLED BLOCK f'm = 2000 PSI MIN.
CONCRETE = f'c = 3000 PSI MIN.
METAL = 1/8" MIN. THK. STEEL Fu=58 KSI, Fy=36 KSI MIN.
MIAMI-DADE COUNTY APPROVED MULLION
1/8" MIN. THK. ALUMINUM (6063-T5, Fu=22 KSI)

IBY OR 2BY WOOD BUCKS AND METAL STRUCTURES NOT BY 'SIW SOLUTIONS' MUST SUSTAIN LOADS IMPOSED BY GLAZING SYSTEM AND TRANSFER THEM TO BUILDING STRUCTURE.
ANCHORS MAY BE HEX OR FLAT HEAD.

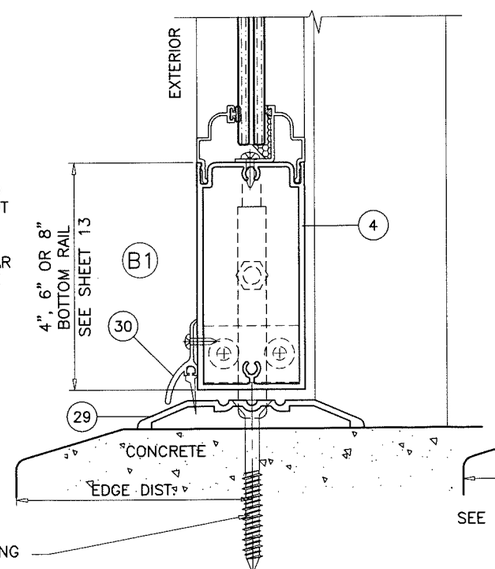

ADA THRESHOLD OPTION #1
OPERABLE UNITS
(NOT APPROVED FOR WATER RESISTANCE)
LIMIT MAX. DESIGN LOADS TO ±62 PSF

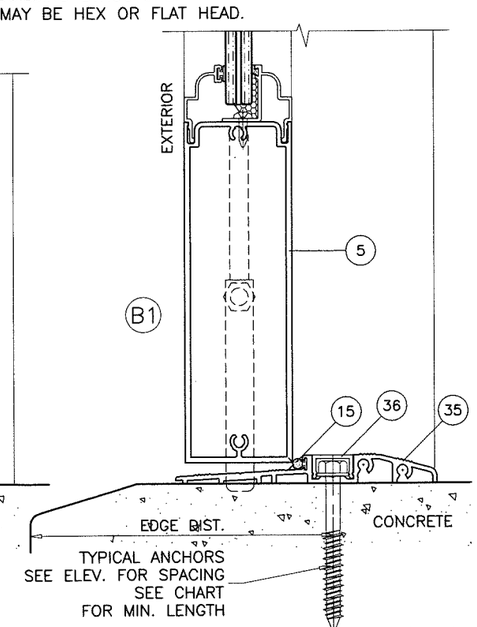

ADA THRESHOLD OPTION #2
OPERABLE UNITS
(NOT APPROVED FOR WATER RESISTANCE)
LIMIT MAX. DESIGN LOADS TO ±62 PSF

PRODUCT REVIEWED
as complying with the Florida
Building Code
Acceptance No. 19-0131.14
Expiration Date 5/23/23
By [signature]
Miami-Dade Product Control

DOOR DETAILS

DAVID AHMAD
LICENSE
No. 70592
Jan 8,2019
STATE OF
FLORIDA
PROFESSIONAL ENGINEER

AL-FAROOQ CORPORATION
ENGINEERS & PRODUCT DEVELOPMENT
9360 SUNSET DRIVE, SUITE 220
MIAMI, FLORIDA 33173 (C.A.N. 3538)
TEL. (305) 264-8100 FAX. (305) 262-6978
COMP-ANL\W13-68SIW

SERIES 500-9 ALUM OUTSWING ENTRANCE DOOR (L.M.I.)

SIW Solutions, LLC.
975 S. CONGRESS AVE. #102
DELRAY BEACH, FL. 33445
TEL. (561) 274-9392 FAX. (561) 274-9262

revisions:

no	date	by	description
C	07.29.15		REV. PER RER COMMENTS
D	10.06.15		REV. PER RER COMMENTS
E	11.07.17		UPDATED TO 2017 FBC
F	12.05.18		COMPANY NAME REV.

date: 12-30-13
scale: 3/8" = 1"
dr. by: TARIQ
chk. by:

drawing no.
W13-68

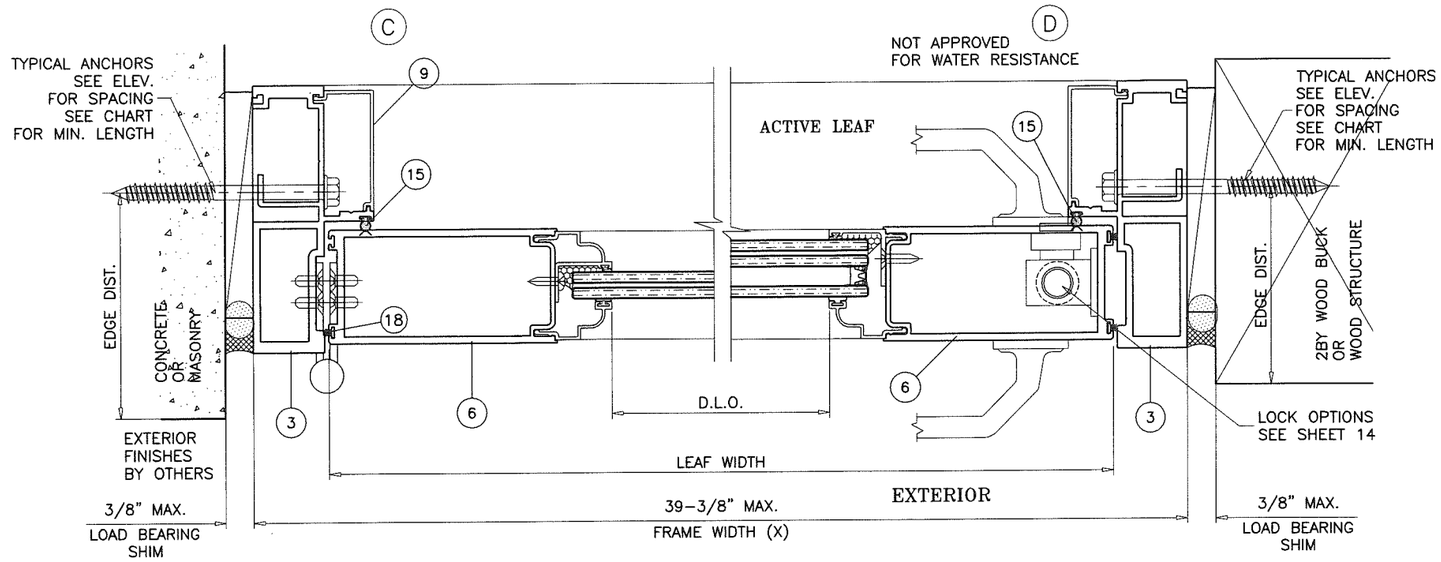

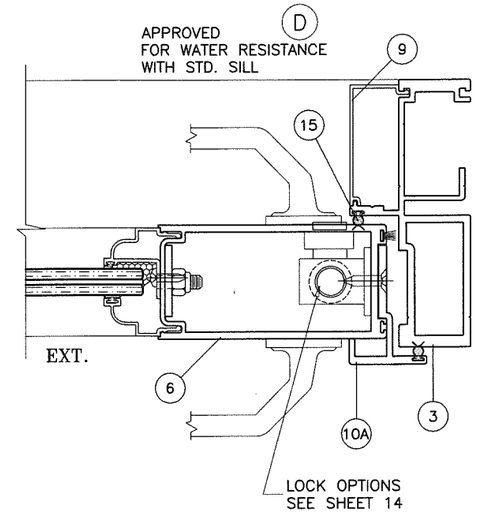

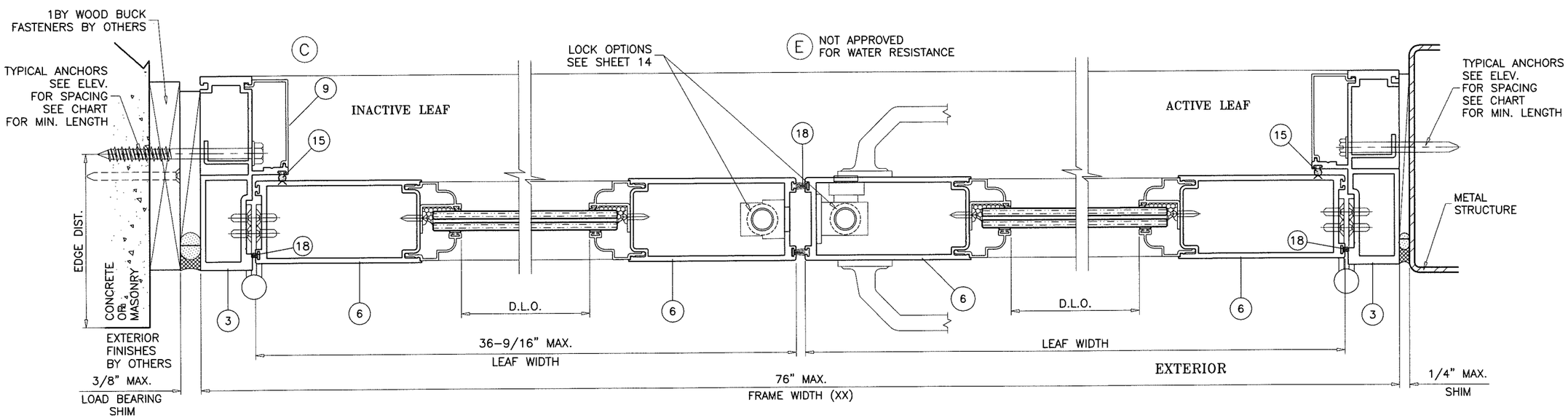

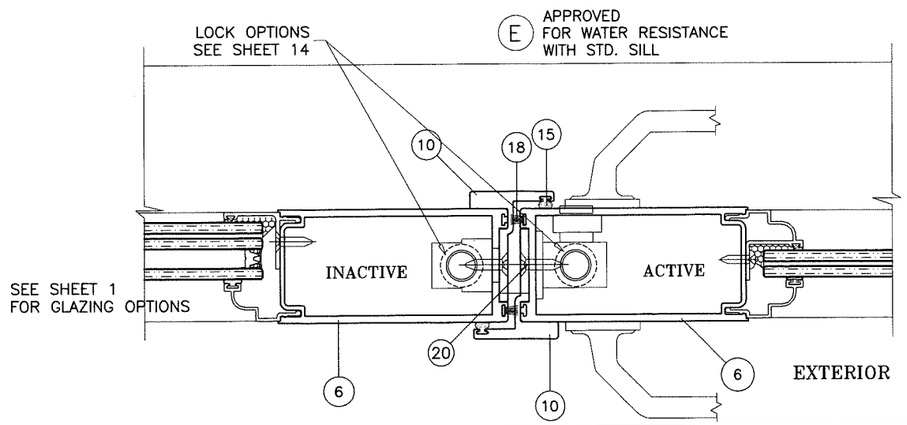

PRODUCT REVIEWED
as complying with the Florida
Building Code
Acceptance No. 19-0131.14
Expiration Date 5/22/23
By Ishwar I. Chande
Miami-Dade Product Control

DOOR DETAILS

TARIQ AHMAD AHMAD
LICENSE
No. 70592
Jan 8,2019
STATE OF
FLORIDA
PROFESSIONAL ENGINEER

AL-FAROOQ CORPORATION
ENGINEERS & PRODUCT DEVELOPMENT
9360 SUNSET DRIVE, SUITE 220
MIAMI, FLORIDA 33173 (C.A.N. 3538)
TEL. (305) 264-8100 FAX. (305) 262-6978
COMP-ANL\W13-68SIW

SERIES 500-9 ALUM OUTSWING ENTRANCE DOOR (L.M.I.)

SIW Solutions, LLC.
975 S. CONGRESS AVE. #102
DELRAY BEACH, FL. 33445
TEL. (561) 274-9392 FAX. (561) 274-9262

revisions:

no	date	by	description
C	07.29.15		REV. PER RER COMMENTS
D	10.06.15		REV. PER RER COMMENTS
E	11.07.17		UPDATED TO 2017 FBC
F	12.05.18		COMPANY NAME REV.

date: 12-30-13
scale: 3/8" = 1"
dr. by: TARIQ
chk. by:

drawing no.
W13-68

DOORS WITH SURFACE APPLIED PANIC HARDWARE

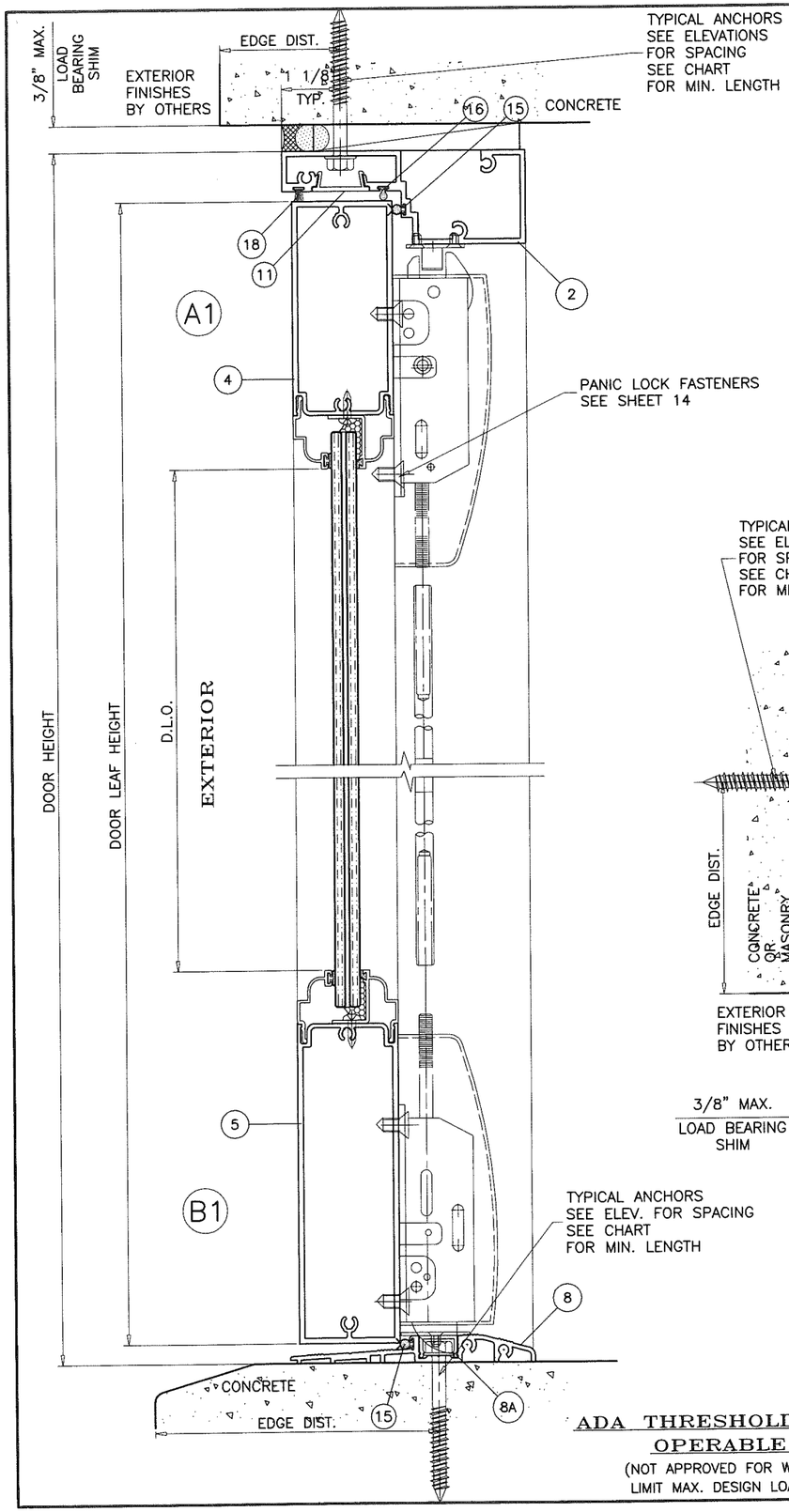

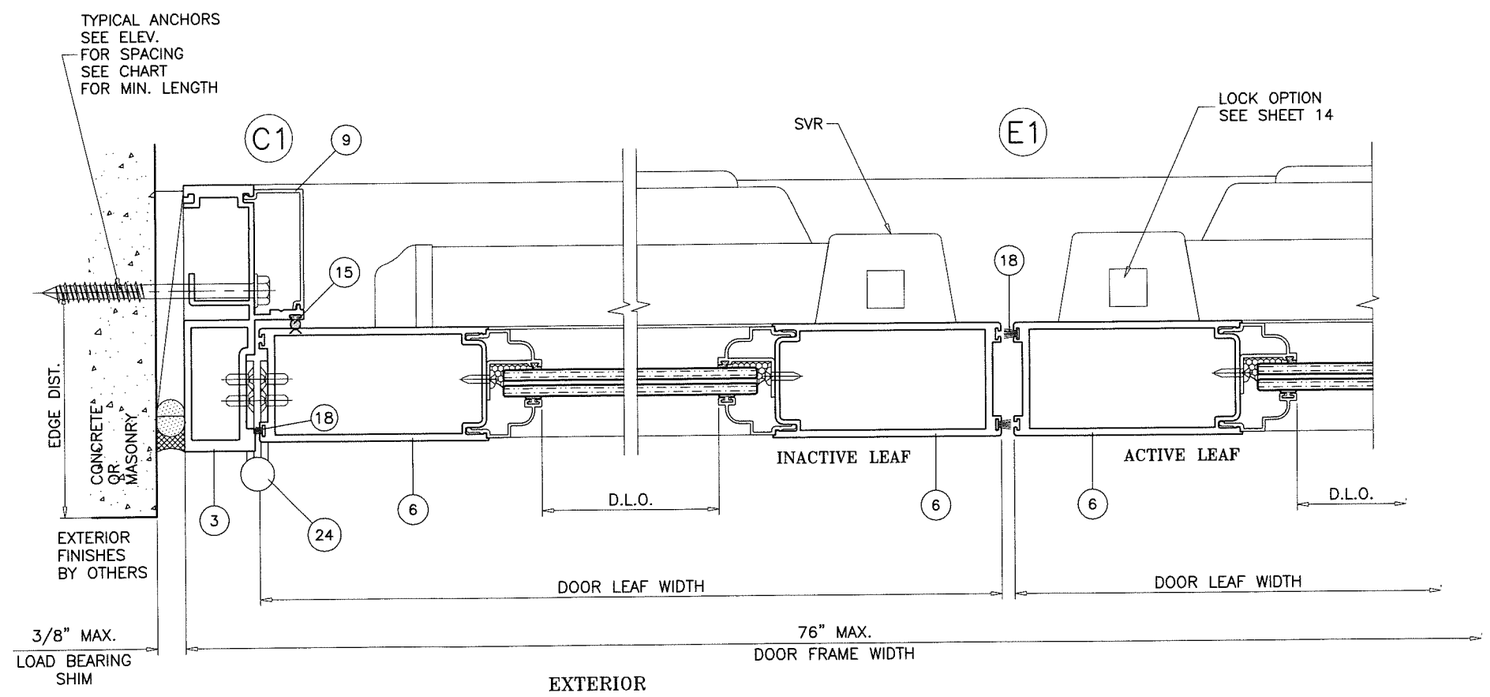

ADA THRESHOLD OPTION #2
OPERABLE UNITS

(NOT APPROVED FOR WATER RESISTANCE)
LIMIT MAX. DESIGN LOADS TO ±62 PSF

DOOR DETAILS

PRODUCT REVISED
as complying with the Florida
Building Code
Acceptance No. 19-0131.14
Expiration Date 5/22/23
Ishwar L. Chandra
Chief State Product Control

JAVAD AHMAD
LICENSE
No. 70592
Jan 8, 2019
STATE OF FLORIDA
PROFESSIONAL ENGINEER

AL-FAROOQ CORPORATION
ENGINEERS & PRODUCT DEVELOPMENT
9360 SUNSET DRIVE, SUITE 220
MIAMI, FLORIDA 33173 (C.A.N. 3538)
TEL. (305) 264-8100 FAX. (305) 262-6978
COMP-ANL\W13-68SIW

SERIES 500-9 ALUM OUTSWING ENTRANCE DOOR (L.M.I.)

SIW Solutions, LLC.
975 S. CONGRESS AVE. #102
DELRAY BEACH, FL. 33445
TEL. (561) 274-9392 FAX. (561) 274-9262

revisions:

no	date	by	description
C	07.29.15		REV. PER RER COMMENTS
D	10.06.15		REV. PER RER COMMENTS
E	11.07.17		UPDATED TO 2017 FBC
F	12.05.18		COMPANY NAME REV.

date: 12-30-13
scale: 3/8" = 1"
dr. by: TARIQ
chk. by:

drawing no.
W13-68

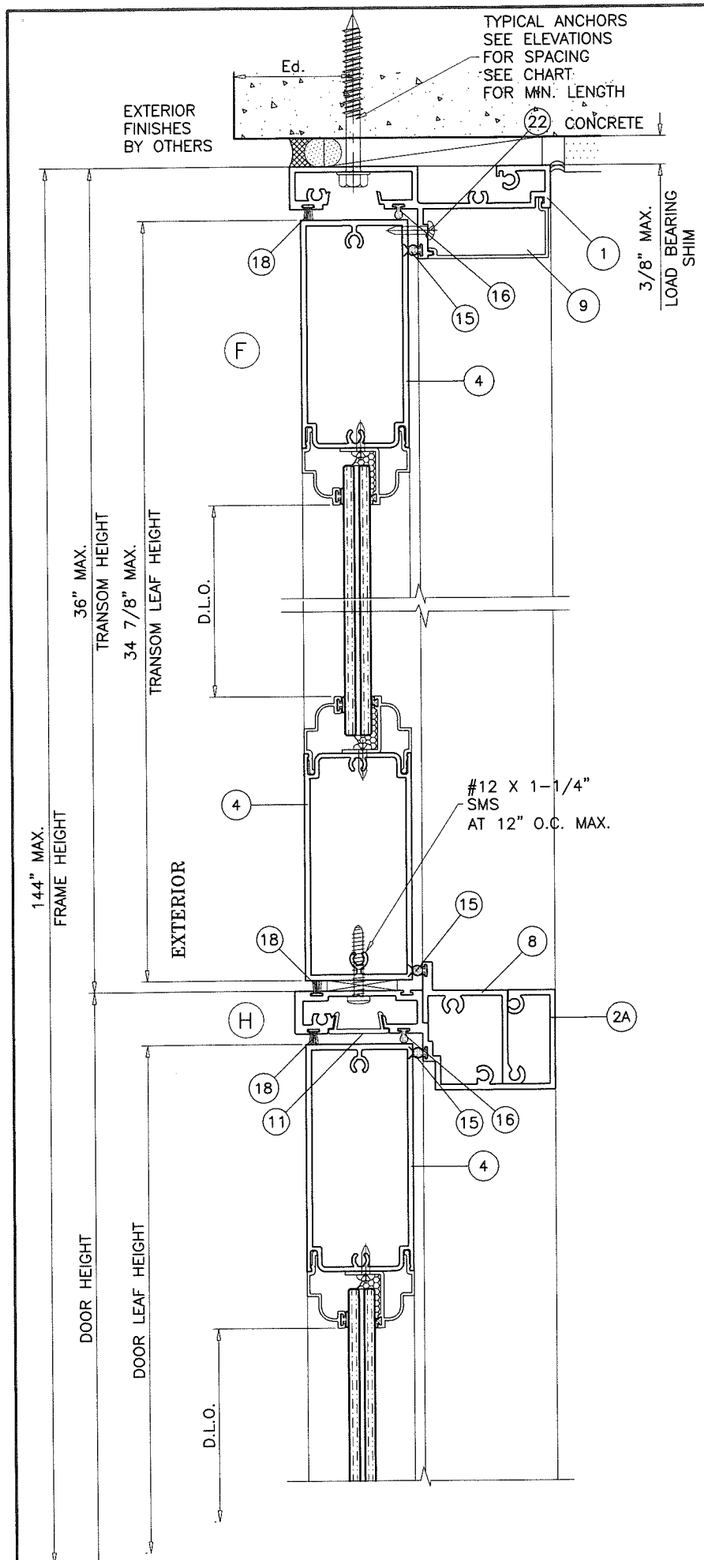

OPERABLE DOOR WITH TRANSOM

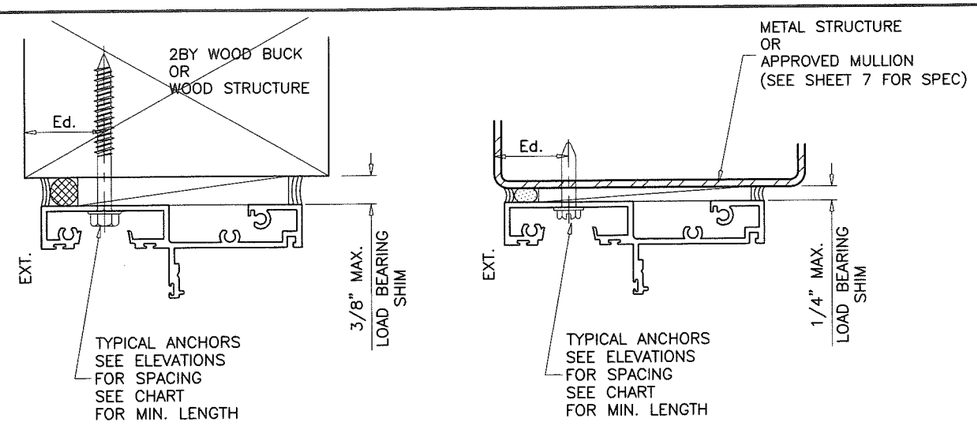

TRANSOM HEAD FRAME

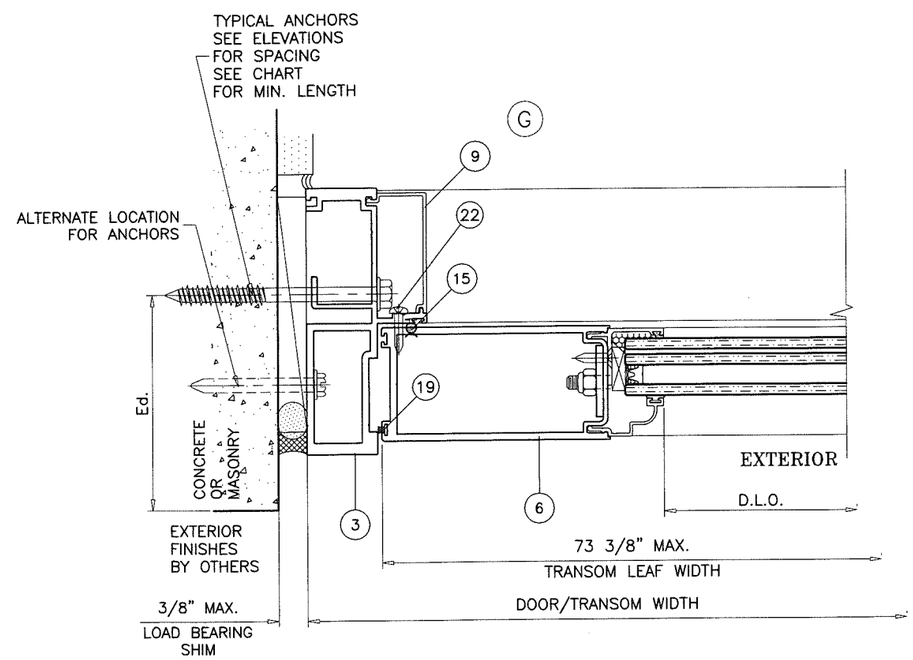

PRODUCT REVIEWED
as complying with the Florida
Building Code
Acceptance No. 19-0131.14
Expiration Date 5/22/23
By Michael Eade Product Control

TRANSOM DETAILS

JAVAD AHMAD
LICENSE
No. 70592
Jan 8,2019
STATE OF
FLORIDA
PROFESSIONAL ENGINEER

AL-FAROOQ CORPORATION
ENGINEERS & PRODUCT DEVELOPMENT
9360 SUNSET DRIVE, SUITE 220
MIAMI, FLORIDA 33173 (C.A.N. 3538)
TEL. (305) 264-8100 FAX. (305) 262-6978

COMP-ANL\W13-68SIW

SERIES 500-9 ALUM OUTSWING ENTRANCE DOOR (L.M.I.)

SIW Solutions, LLC.
975 S. CONGRESS AVE. #102
DELRAY BEACH, FL. 33445
TEL. (561) 274-9392 FAX. (561) 274-9262

revisions:

no	date	by	description
C	07.29.15		REV. PER RER COMMENTS
D	10.06.15		REV. PER RER COMMENTS
E	11.07.17		UPDATED TO 2017 FBC
F	12.05.18		COMPANY NAME REV.

date: 12-30-13
scale: 3/8" = 1"
dr. by: TARIQ
chk. by:

drawing no.
W13-68

sheet 10 of 16

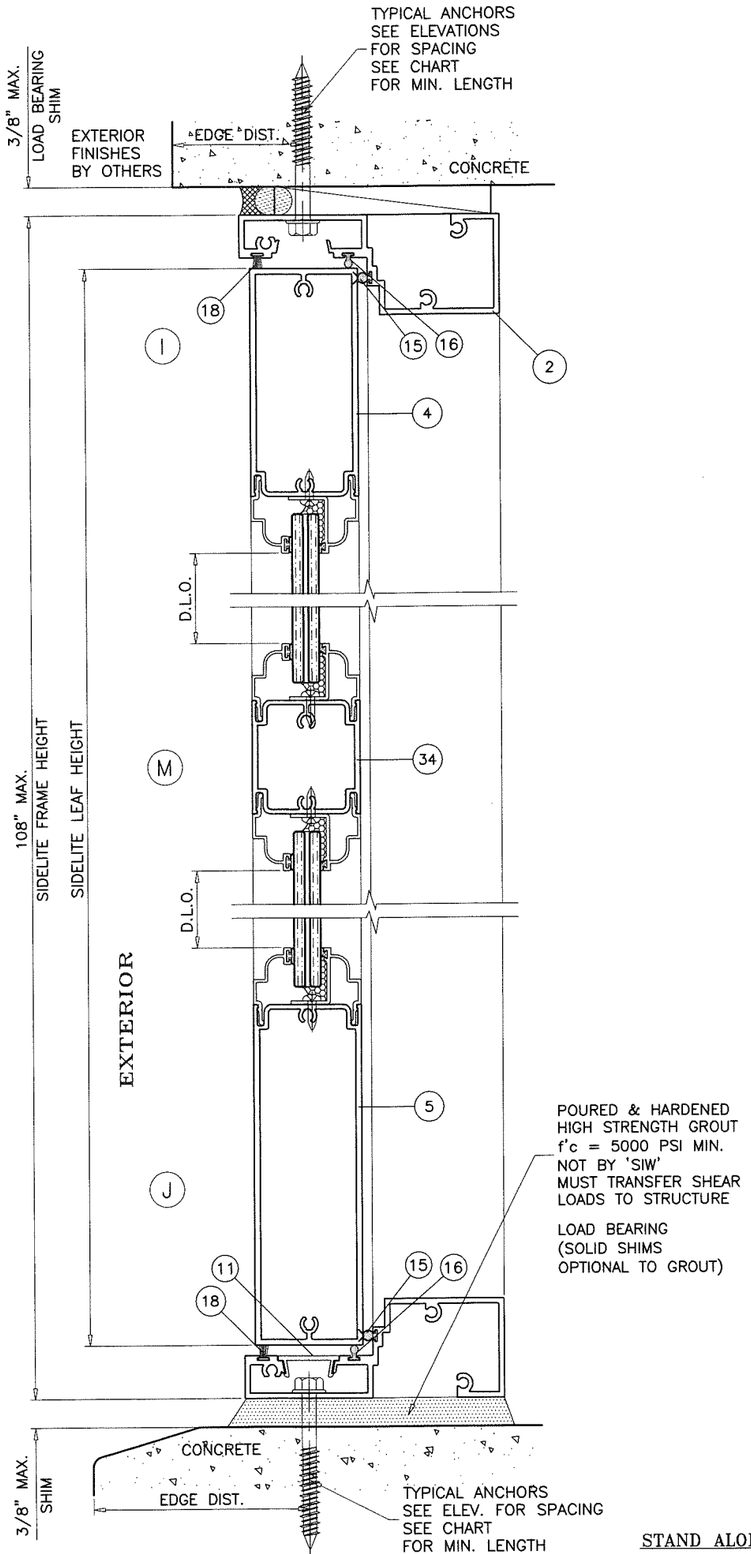

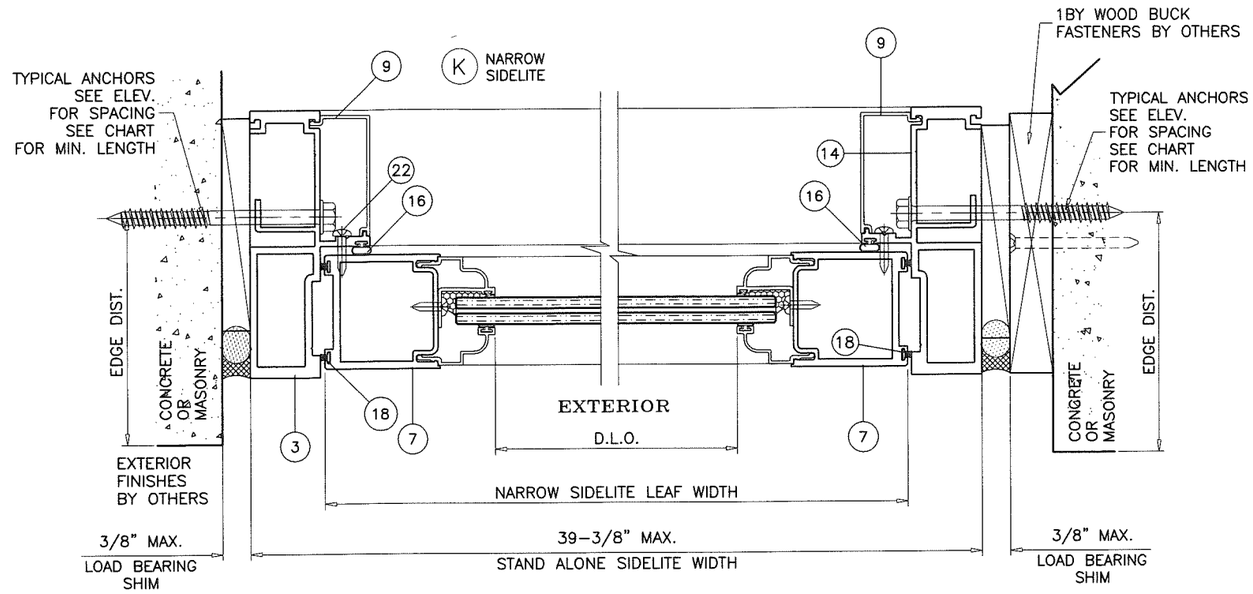

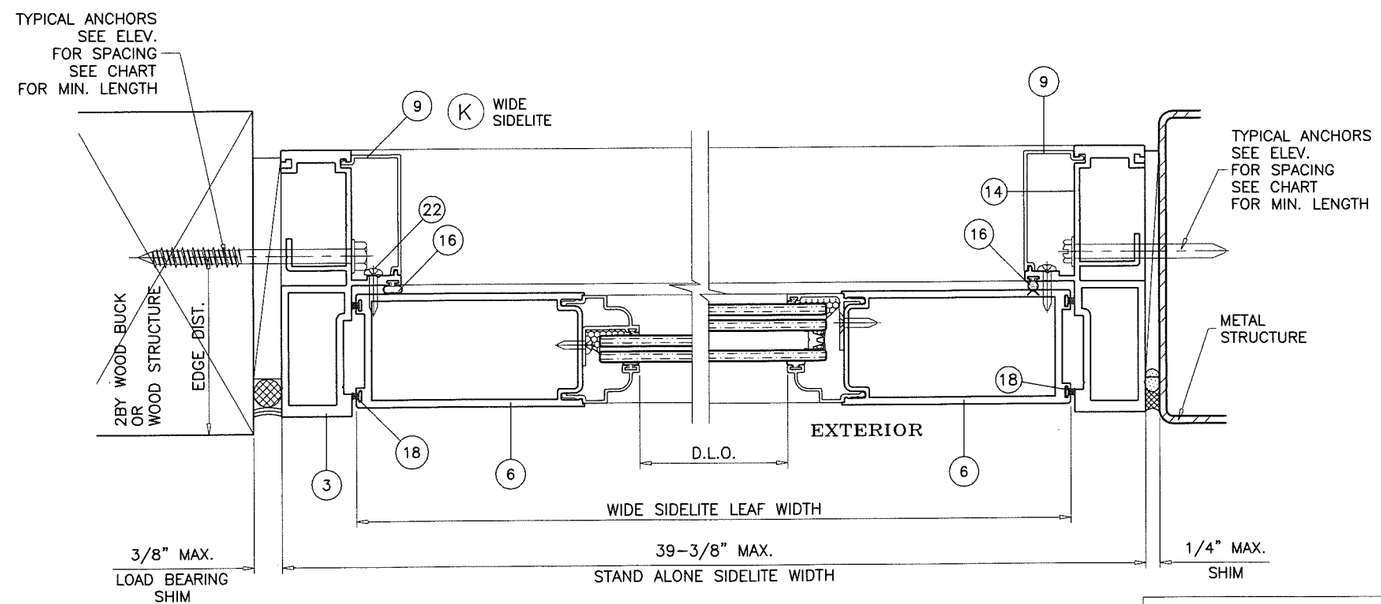

STAND ALONE STATIONARY UNITS
(SINGLE SIDELITE)

SIDELITE DETAILS

PRODUCT REVIEWED
as complying with the Florida
Building Code
Acceptance No 19-0131.14
Expiration Date 5/22/23
Product Control

DAVID AHMAD
LICENSE
No. 70592
Jan 8,2019
STATE OF
FLORIDA
PROFESSIONAL ENGINEER

AL-FAROOQ CORPORATION
ENGINEERS & PRODUCT DEVELOPMENT
9360 SUNSET DRIVE, SUITE 220
MIAMI, FLORIDA 33173 (C.A.N. 3538)
TEL. (305) 264-8100 FAX. (305) 262-6978

COMP-ANL\W13-68SIW

SERIES 500-9 ALUM OUTSWING ENTRANCE DOOR (L.M.I.)

SIW Solutions, LLC.
975 S. CONGRESS AVE. #102
DELRAY BEACH, FL. 33445
TEL. (561) 274-9392 FAX. (561) 274-9262

revisions:

no	date	by	description
C	07.29.15	RER	REV. PER COMMENTS
D	10.06.15	RER	REV. PER COMMENTS
E	11.07.17		UPDATED TO 2017 FBC
F	12.05.18		COMPANY NAME REV.

date: 12-30-13
scale: 3/8" = 1"
dr. by: TARIQ
chk. by:

drawing no.
W13-68

sheet 11 of 16

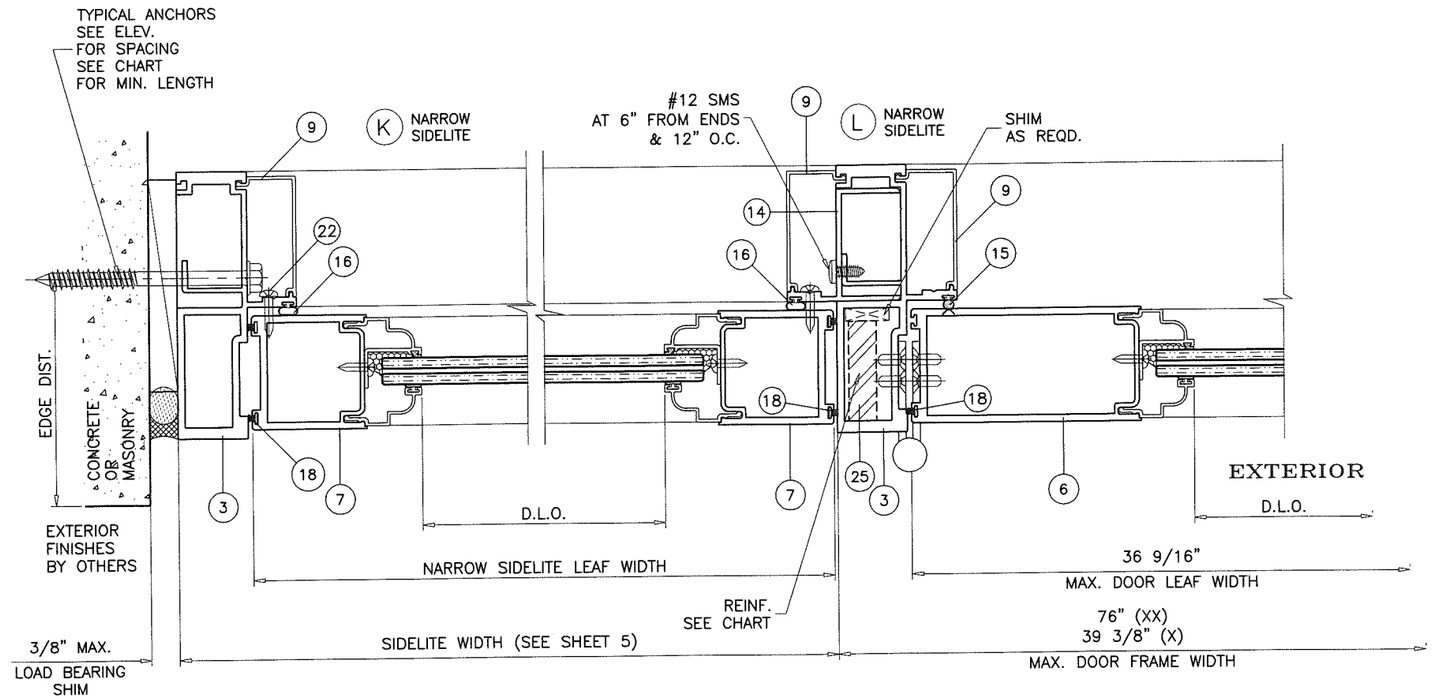

NOTE:
MAX. FRAME AREA OF ALTERNATE SIZE NOT TO EXCEED=127.31 SQ. FT.

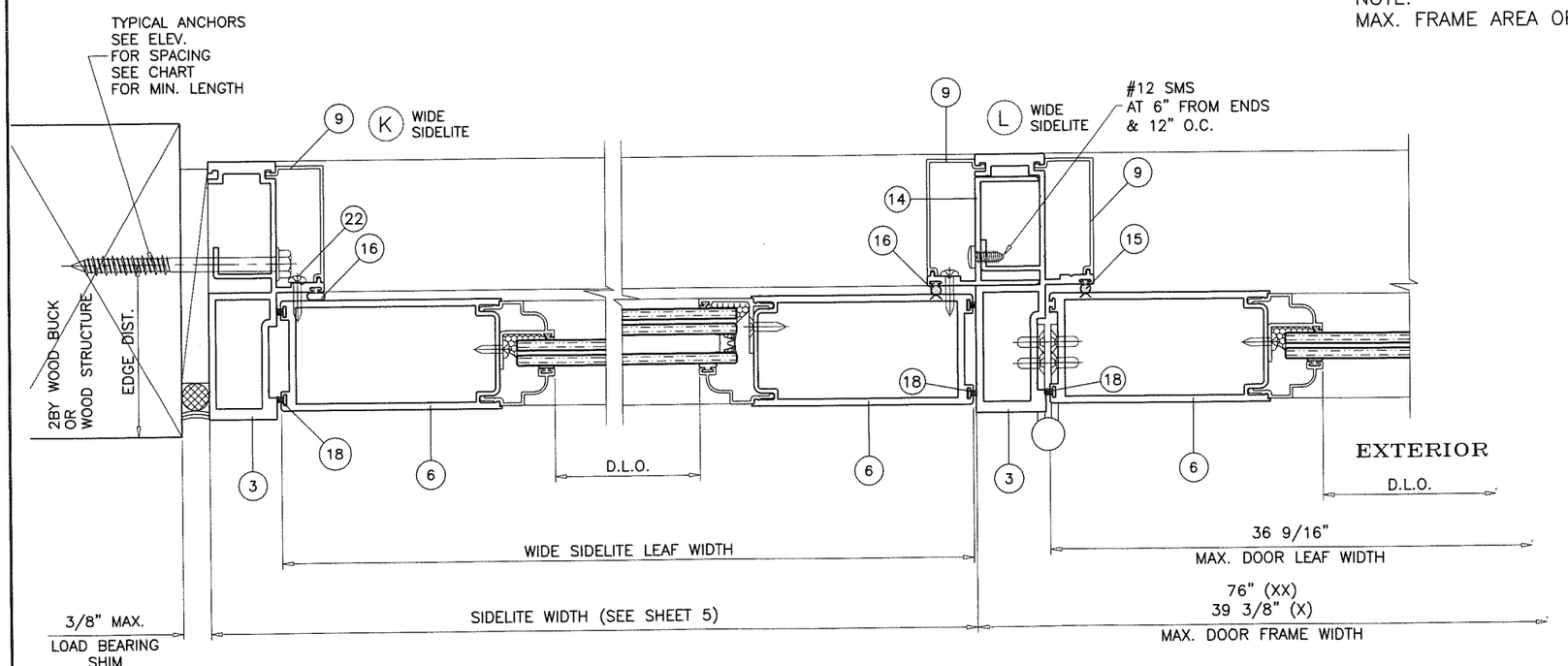

PRODUCT REVIEWED
as complying with the Florida
Building Code
Acceptance No. 19-0131.14
Expiration Date 5/22/23
By Ishay I. Chaudhuri
Miami-Dade Product Control

SIDELITE WITH DOOR DETAILS

JAVAD AHMAD
LICENSE
No. 70592
Jan 8,2019
STATE OF
FLORIDA
PROFESSIONAL ENGINEER

AL-FAROOQ CORPORATION
ENGINEERS & PRODUCT DEVELOPMENT
9360 SUNSET DRIVE, SUITE 220
MIAMI, FLORIDA 33173 (C.A.N. 3538)
TEL. (305) 264-8100 FAX. (305) 262-6978

COMP-ANL\W13-68SIW

SERIES 500-9 ALUM OUTSWING ENTRANCE DOOR (L.M.I.)

SIW Solutions, LLC.
975 S. CONGRESS AVE. #102
DELRAY BEACH, FL. 33445
TEL. (561) 274-9262 FAX. (561) 274-9262

revisions:

no	date	by	description
C	07.29.15	RER	REV. PER RER COMMENTS
D	10.06.15		REV. PER RER COMMENTS
E	11.07.17		UPDATED TO 2017 FBC
F	12.05.18		COMPANY NAME REV.

date: 12-30-13
scale: 3/8" = 1"
dr. by: TARIQ
chk. by:

drawing no.
W13-68

sheet 12 of 16

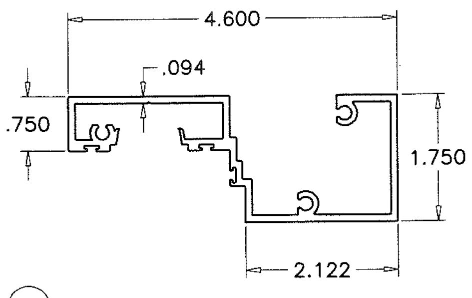

② DOOR/SIDELITE FRAME HEAD/SILL

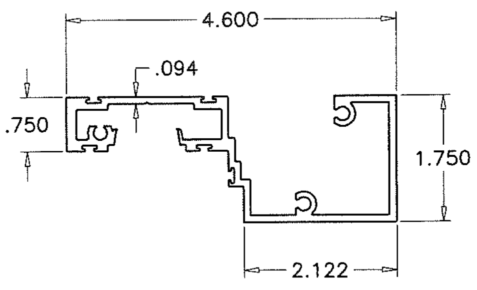

(2A) TRANSOM MULLION

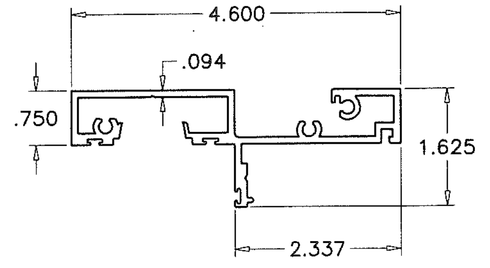

① TRANSOM FRAME HEAD

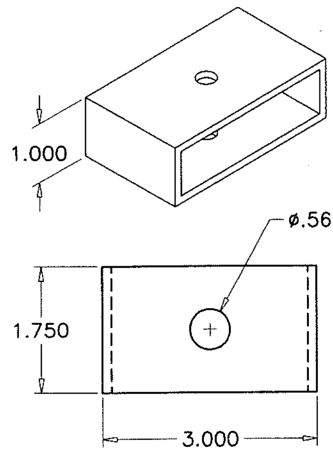

(–) FLUSH BOLT BLOCK

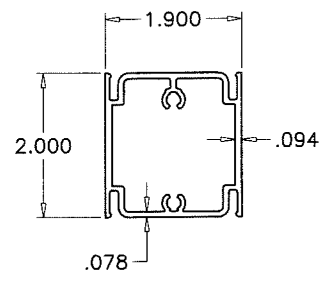

(34) CHAIR RAIL

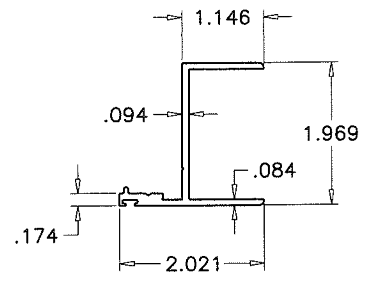

(14) JAMB/MULL ADAPTER

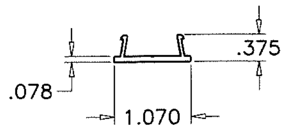

(11) SNAP COVER

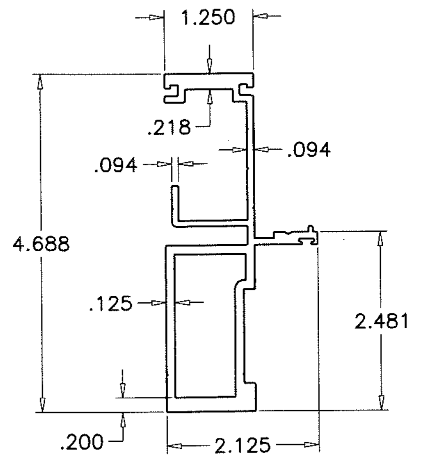

③ FRAME JAMB

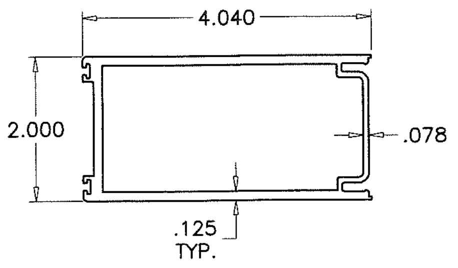

⑥ HINGE/LOCK STILE

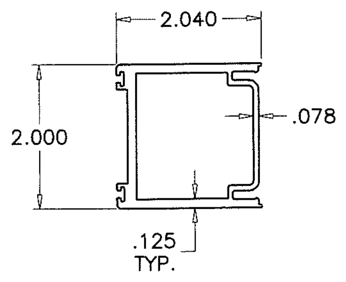

⑦ SIDELITE SASH STILE

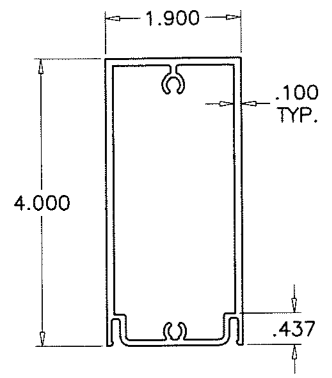

④ TOP/BOTTOM RAIL

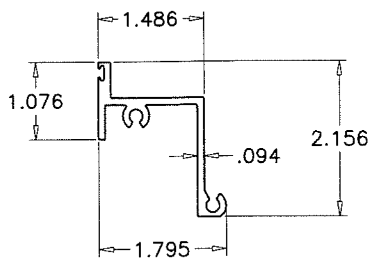

⑧ DOOR TRANSOM MULLION ADAPTER

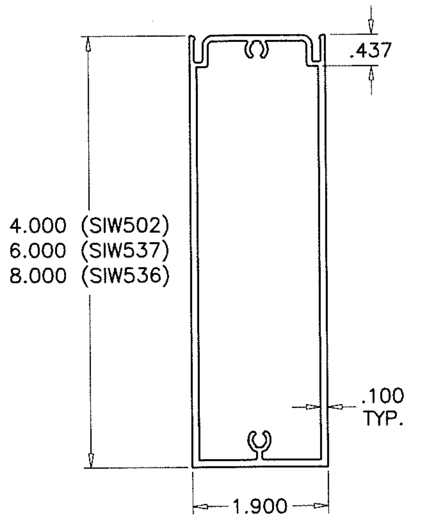

⑤ BOTTOM RAIL

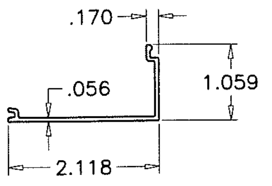

⑨ JAMB SCREW COVER

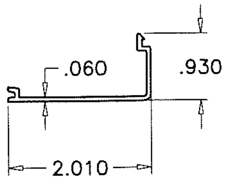

(9A) TRANSOM SCREW COVER

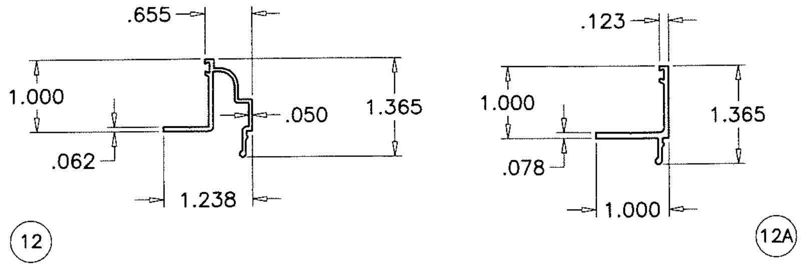

INTERIOR GLASS STOPS

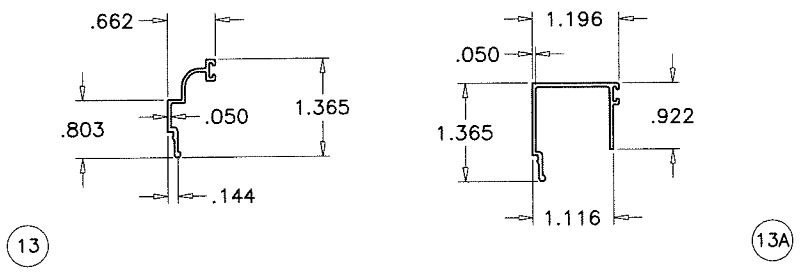

EXTERIOR GLASS STOP

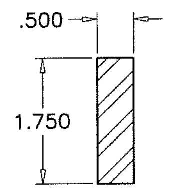

(25) STEEL REINF.

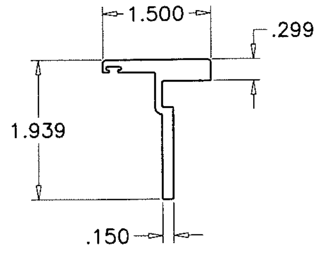

(10) DOUBLE DOOR ASTRAGAL

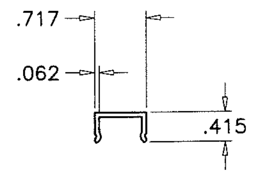

(36) THRESHOLD COVER

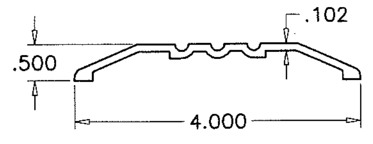

(29) OPTION #1
ADA THRESHOLD

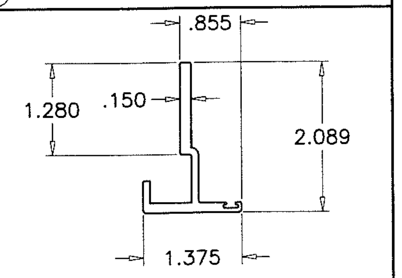

(10A) SINGLE DOOR ASTRAGAL

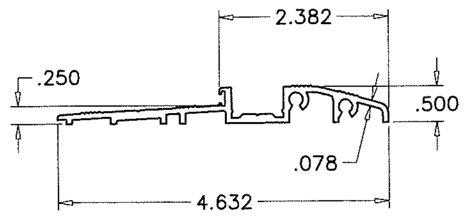

(35) OPTION #2
ADA THRESHOLD

PRODUCT REVISED
as complying with the Florida
Building Code
Acceptance No 19-0131.14
Expiration Date 5/22/23
By Ishaq I. Chanda
Miami-Dade Product Control

JAVAD AHMAD
LICENSE
No. 70592
Jan 8,2019
STATE OF FLORIDA
PROFESSIONAL ENGINEER

AL-FAROOQ CORPORATION
ENGINEERS & PRODUCT DEVELOPMENT
9360 SUNSET DRIVE, SUITE 220
MIAMI, FLORIDA 33173 (C.A.N. 3538)
TEL. (305) 264-8100 FAX. (305) 262-6978

COMP–ANL W13–68SIW

SERIES 500–9 ALUM OUTSWING ENTRANCE DOOR (L.M.I.)

SIW Solutions, LLC.
975 S. CONGRESS AVE. #102
DELRAY BEACH, FL. 33445
TEL. (561) 274–9392 FAX. (561) 274–9262

revisions:

no	date	by	description
C	07.29.15		NO CHANGE THIS SHEET
D	10.06.15		NO CHANGE THIS SHEET
E	11.07.17		UPDATED TO 2017 FBC
F	12.05.18		COMPANY NAME REV.

date: 12–30–13
scale: 3/8" = 1"
dr. by: TARIQ
chk. by:

drawing no.
W13–68

sheet 13 of 16

LOCK OPTIONS 1 & 3

STD. 3 POINT LOCK
MAX. FRAME HEIGHT = 108 IN.
MAX. LEAF = 36-9/16 IN.
MAX. DESIGN LOAD = 80 PSF

ACTIVE LEAF:

OPTION #1:

3 POINT LOCK ASSEMBLY (M1805S) BY 'ADAMS RITE'
WITH 4015 THROW BOLT AT 35-1/2" FROM BOTTOM
FLUSH BOLTS CONNECTED TO LOCK
KEY OPERATED ON EXTERIOR AND THUMB TURN ON
INTERIOR AND ENGAGING FRAME AT HEAD AND SILL

OPTION #3:

LOCK ASSEMBLY (W5110-STACT6) BY 'ASHLAND'
WITH THROW BOLT AT 35-1/2" FROM BOTTOM
FLUSH BOLTS CONNECTED TO LOCK
KEY OPERATED ON EXTERIOR AND THUMB TURN ON
INTERIOR AND ENGAGING FRAME AT HEAD AND SILL

INACTIVE LEAF

CONCEALED FLUSH BOLTS (FB-1202-914)
BY 'SULLIVAN & ASSOC.'
MANUALLY OPERATED LEVERS MOUNTED ON
INSIDE FACE OF LEAF STILE LOCATED AT
13-1/2" FROM BOTTOM AND 34" FROM TOP

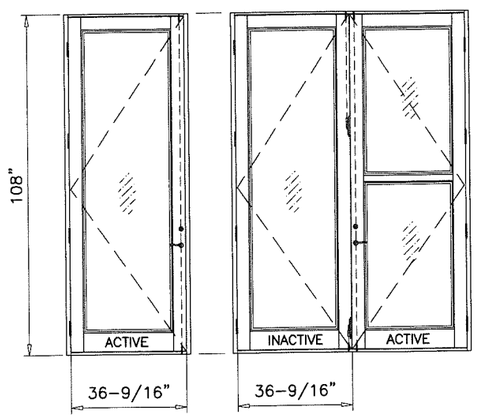

LOCK OPTION #2 NOT USED

LOCK OPTION 4

MAX. FRAME HEIGHT = 97-3/4 IN.
MAX. LEAF = 36-9/16 IN.
MAX. DESIGN LOAD = 60 PSF

ACTIVE LEAF:

EXPOSED FLUSH BOLTS (FB-1202-914)
BY 'SULLIVAN & ASSOC.'
MANUALLY OPERATED LEVERS MOUNTED ON
FACE OF LEAF STILE LOCATED AT
13-1/2" FROM BOTTOM AND 34" FROM TOP

INACTIVE LEAF

CONCEALED FLUSH BOLTS (FB-1202-914)
BY 'SULLIVAN & ASSOC.'
MANUALLY OPERATED LEVERS MOUNTED ON
INSIDE FACE OF LEAF STILE LOCATED AT
13-1/2" FROM BOTTOM AND 34" FROM TOP

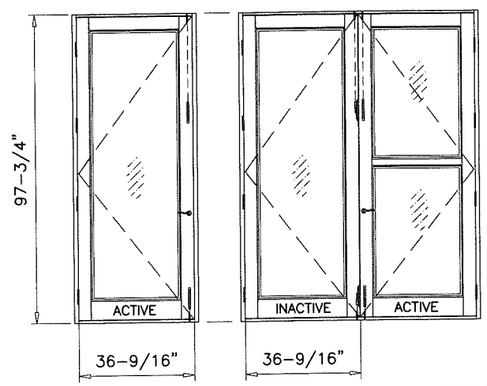

LOCK OPTION 5

PANIC EXIT DEVICE (SVR)
MAX. FRAME HEIGHT = 97-3/16 IN.
MAX. LEAF WIDTH = 36-9/16 IN.
MAX. DESIGN LOAD = 62 PSF

ACTIVE & INACTIVE LEAF:

SURFACE VERTICAL ROD PANIC EXIT DEVICE BY
'JACKSON PANIC SYSTEM' MODEL 1275 LOCATED AT 38"
FROM SILL AT EACH LEAF.
PANIC BAR FASTENED TO LEAF WITH
(1) #8-32 X 1/4" SOCKET HEAD MACHINE SCREW
(1) #6 X 3/4" FH TEK SCREW
TOP AND BOTTOM LATCH ASSEMBLY BRACKETS FASTENED
TO STILE WITH (2) 1/4-20 X 1-1/4" SCREWS.

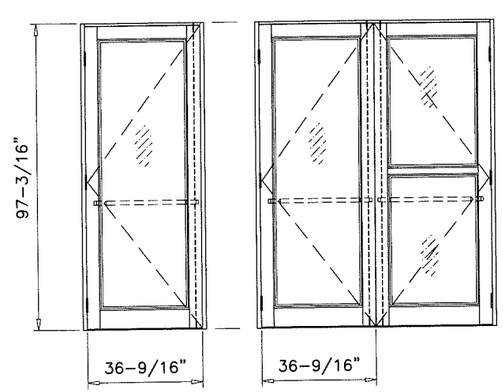

ITEM #	PART #	REQD.	DESCRIPTION	MATERIAL	MANF./SUPPLIER/REMARKS
1	SIW523	AS REQD.	FRAME TRANSOM HEAD	6063-T6	ALTERNATE TO 2
2	SIW505	1	DOOR/SIDELITE FRAME HEAD/SILL	6063-T6	–
2A	SIW505B	1	TRANSOM MULLION	6063-T6	–
3	SIW506	2/DOOR	FRAME JAMB	6063-T6	–
4	SIW502	1/ LEAF	DOOR TOP/BOTTOM RAIL	6063-T6	–
5	SIW537	1/ LEAF	DOOR BOTTOM RAIL (6")	6063-T6	SEE SHEET 13
5.1	SIW536	1/ LEAF	DOOR BOTTOM RAIL (8")	6063-T6	SEE SHEET 13
6	SIW503	2/ LEAF	HINGE STILE/LOCK STILE	6063-T6	–
7	SIW507	2/ LEAF	SIDELITE SASH STILE	6063-T6	–
8	SIW542	AS REQD.	DOOR TRANSOM MULLION ADAPTER	6063-T6	–
9	SIW511	AS REQD.	SCREW COVER	6063-T6	JAMB & TRANSOM
10	SIW509	AS REQD.	DOUBLE DOOR ASTRAGAL	6063-T6	–
10A	SIW535	AS REQD.	SINGLE DOOR ASTRAGAL	6063-T6	–
11	SIW510	AS REQD.	SCREW COVER	6063-T5	–
12	SIW512	AS REQD.	INTERIOR GLASS STOP	6063-T5	–
12A	DWF-024	AS REQD.	INTERIOR GLASS STOP	6063-T5	–
13	SIW513	AS REQD.	EXTERIOR GLASS STOP	6063-T6	–
13A	SIW533	AS REQD.	EXTERIOR GLASS STOP	6063-T6	–
14	SIW504	AS REQD.	DOOR JAMB/MULL ADAPTER	6063-T6	–
15	9016E	–	BULB W'STRIPPING	VINYL	CENTRAL PLSTICS
16	U4513	–	Q-LON W'STRIPPING	VINYL	SCHLEGEL
17	5530	AS REQD.	INTERIOR GLAZING GASKET (DUROMETER 70±5)	SANTOPRENE	BY CENTRAL PLASTICS
17A	5531	AS REQD.	EXTERIOR GLAZING GASKET (DUROMETER 70±5)	SANTOPRENE	BY CENTRAL PLASTICS
18	W23201NW0020	AS RQD.	FINSEAL PILE W'STRIPPING	–	ULTRAFAB
20	#8 X 1/2"	–	ASTRAGAL SCREWS PH SMS	–	AT 4" FROM ENDS & 8" O.C.
21	#8 X 1/2"	AS REQD.	GLASS STOP SCREWS SELF DRILLING	–	AT 8" FROM ENDS & 15" O.C. MAX.
22	#12 X 1-1/4"	–	FIX. PANEL SCREWS PH SMS	–	AT 6" FROM ENDS & 17" O.C. MAX.
24	SD44HD	4/LEAF	BUTT HINGES	ST. STEEL	DELTANA
25	–	AS REQD.	MULLION REINFORCING	STEEL	–
26	#12 X 4"	1/ CORNER	FRAME ASSEMBLY SCREWS	ST. STEEL	PH SMS
27	#12 X 2"	AS REQD.	FRAME AND LEAF ASSEMBLY SCREWS	ST. STEEL	PH SMS
28	#12 X 1/2"	AS REQD.	HINGE ASSEMBLY SCREWS	ST. STEEL	FH MS TYPE F SS
29	20305	AS REQD.	ADA THRESHOLD OPTION #1	6063-T6	–
30	DB019AV36	AS REQD.	DOOR BOTTOM SWEEP	ALUM/VINYL	BY CRL
31	SIW521	–	FLUSH BOLT BLOCK	6063-T6	–
32	#2	–	FLUSH BOLTS	–	SULLIVAN & ASSOC.
34	SIW539	–	2" CHAIR RAIL	6063-T6	–
35	SIW546	1	ADA THRESHOLD OPTION #2	6063-T6	–
36	SIW547	1	THRESHOLD COVER	6063-T6	–

SEALANTS:

ALL JOINTS AND FRAME CONNECTIONS SEALED WITH
SMALL JOINT SEALER.

HINGES:

4" X 4" ST. STEEL BUTT HINGES DELTANA (DSB4NB OR SD44HD)
AT 13" FROM TOP AND BOTTOM ENDS AND 26-5/8" O.C. MAX.
HINGE ATTACHED TO DOOR FRAME AND DOOR STILE
USING (4) #12 X 1" FH MS
3 HINGES PER LEAF UPTO 6/8 HIGH DOORS
4 HINGES PER LEAF DOORS HIGHER THAN 6/8

PRODUCT REVIEW
as complying with the Florida
Building Code
Acceptance No 19-0131.14
Expiration Date 5/22/23
By Ishay I. Chaut
Manager Product Control

JAVAD AHMAD
LICENSE
No. 70592
Jan 8, 2019
STATE OF FLORIDA
PROFESSIONAL ENGINEER

AL-FAROOQ CORPORATION
ENGINEERS & PRODUCT DEVELOPMENT
9360 SUNSET DRIVE, SUITE 220
MIAMI, FLORIDA 33173 (C.A.N. 3538)
TEL. (305) 264-8100 FAX. (305) 262-6978

COMP-ANL\W13-68SIW

SERIES 500-9 ALUM OUTSWING ENTRANCE DOOR (L.M.I.)

SIW Solutions, LLC.
975 S. CONGRESS AVE. #102
DELRAY BEACH, FL. 33445
TEL. (561) 274-9392 FAX. (561) 274-9262

revisions:

no	date	by	description
C	07.29.15		NO CHANGE THIS SHEET
D	10.06.15		REV. PER RER COMMENTS
E	11.07.17		UPDATED TO 2017 FBC
F	12.05.18		COMPANY NAME REV.

date: 12-30-13
scale: 3/8" = 1"
dr. by: TARIQ
chk. by:

drawing no. W13-68

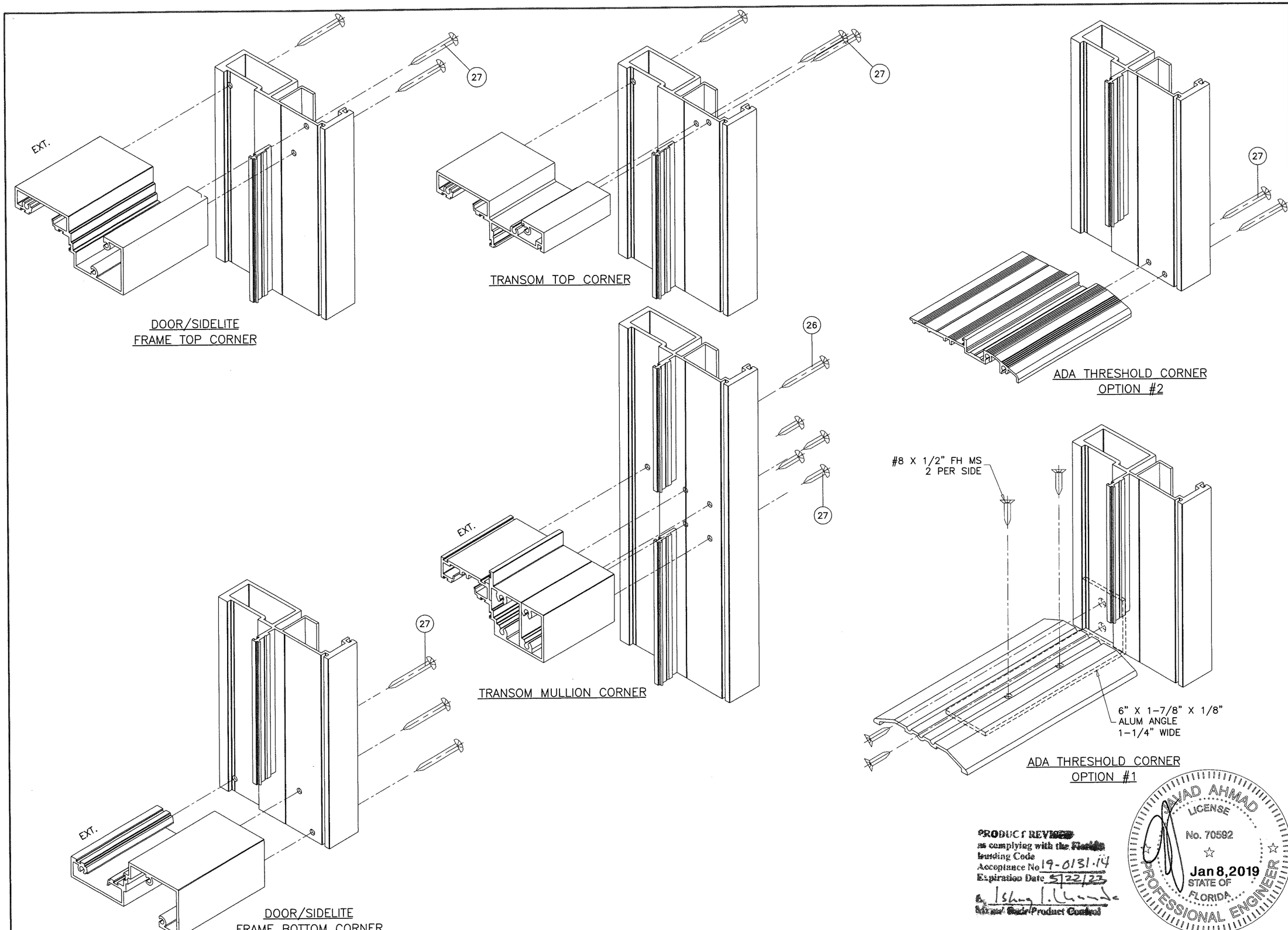

PRODUCT REVIEWED
as complying with the Florida
Building Code
Acceptance No. 19-0131.14
Expiration Date 5/22/23
Michael Gade/Product Control

AWAD AHMAD
LICENSE
No. 70592
Jan 8,2019
STATE OF
FLORIDA
PROFESSIONAL ENGINEER

AL-FAROOQ CORPORATION
ENGINEERS & PRODUCT DEVELOPMENT
9360 SUNSET DRIVE, SUITE 220
MIAMI, FLORIDA 33173 (C.A.N. 3538)
TEL. (305) 264-8100 FAX. (305) 262-6978

COMP-ANL\W13-68SIW

SERIES 500-9 ALUM OUTSWING ENTRANCE DOOR (L.M.I.)

SIW Solutions, LLC.
975 S. CONGRESS AVE. #102
DELRAY BEACH, FL. 33445
TEL. (561) 274-9392 FAX. (561) 274-9262

revisions:

no	date	by	description
C	07.29.15		NO CHANGE THIS SHEET
D	10.06.15		NO CHANGE THIS SHEET
E	11.07.17		UPDATED TO 2017 FBC
F	12.05.18		COMPANY NAME REV.

date: 12-30-13
scale: 3/8" = 1"
dr. by: TARIQ
chk. by:

drawing no.
W13-68

sheet 15 of 16

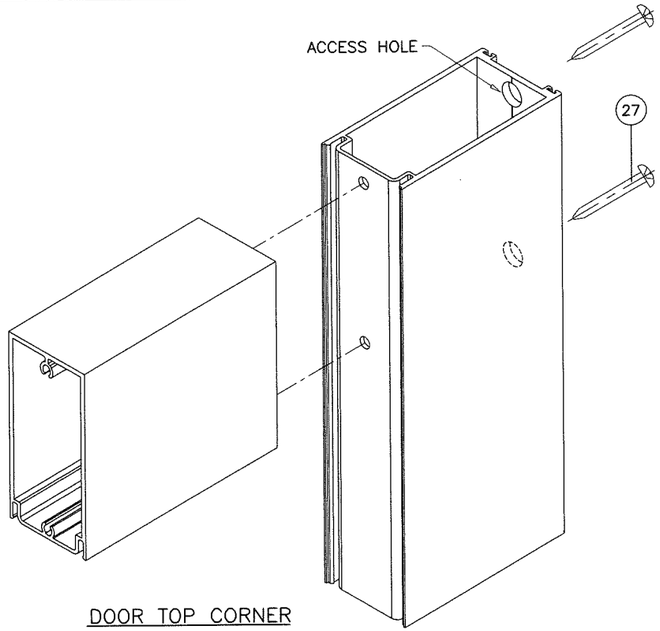

DOOR TOP CORNER

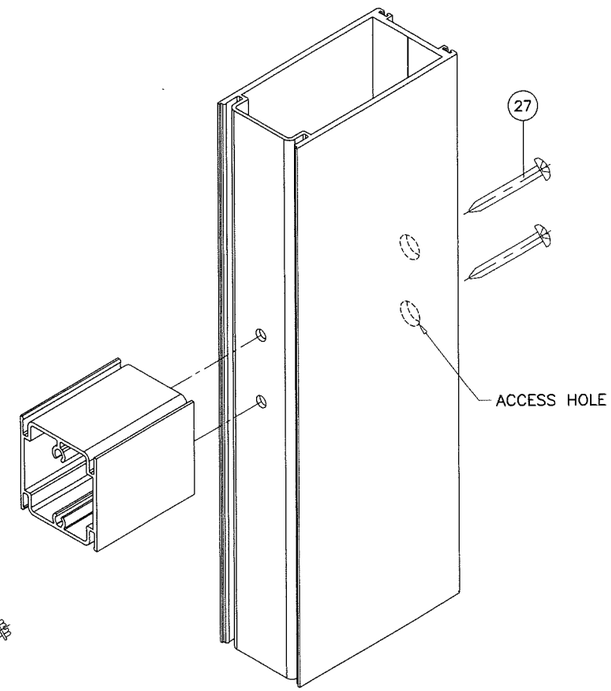

CHAIR RAIL CORNER

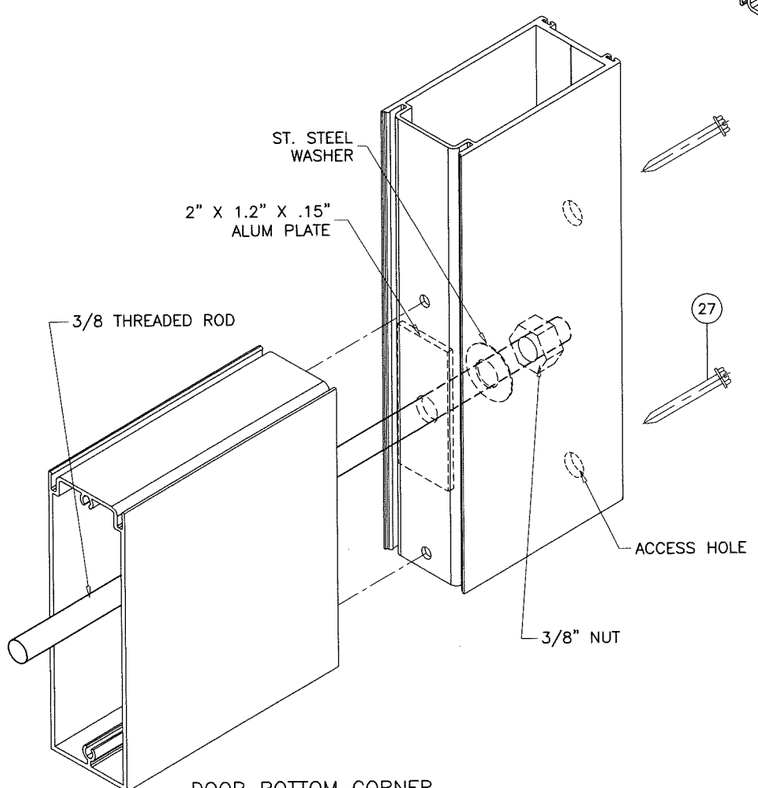

DOOR BOTTOM CORNER

PRODUCT REVIEWED
as complying with the Florida
Building Code
Acceptance No. 19-0131.14
Expiration Date 5/22/23
By Ishwar I. Chhabra
Manager Product Control

JAVAD AHMAD
LICENSE
No. 70592
Jan 8,2019
STATE OF
FLORIDA
PROFESSIONAL ENGINEER

AL-FAROOQ CORPORATION
ENGINEERS & PRODUCT DEVELOPMENT
9360 SUNSET DRIVE, SUITE 220
MIAMI, FLORIDA 33173 (C.A.N. 3538)
TEL. (305) 264-8100 FAX. (305) 262-6978
COMP-ANL\W13-68SIW

SERIES 500-9 ALUM OUTSWING ENTRANCE DOOR (L.M.I.)

SIW Solutions, LLC.
975 S. CONGRESS AVE. #102
DELRAY BEACH, FL. 33445
TEL. (561) 274-9392 FAX. (561) 274-9262

revisions:

no	date	by	description
C	07.29.15		NO CHANGE THIS SHEET
D	10.06.15		NO CHANGE THIS SHEET
E	11.07.17		UPDATED TO 2017 FBC
F	12.05.18		COMPANY NAME REV.

date: 12-30-13
scale: 3/8" = 1"
dr. by: TARIQ
chk. by:

drawing no.
W13-68